UNCLASSIFIED

ORNL-1447

CENTRAL RESEARCH LIBRARY
DOCUMENT COLLECTION
Cy. 1

MARTIN MARIETTA ENERGY SYSTEMS LIBRARIES
3 4456 0360641 7

LABORATORY RECORDS
1954

MAKING SMALL HOLES

By

John R. Sites

OAK RIDGE NATIONAL LABORATORY
CENTRAL RESEARCH LIBRARY
CIRCULATION SECTION
4500N ROOM 175
LIBRARY LOAN COPY
DO NOT TRANSFER TO ANOTHER PERSON
If you wish someone else to see this report, send in name with report and the library will arrange a loan.
UCN-7969 (3 9-77)

OAK RIDGE NATIONAL LABORATORY
OPERATED BY
CARBIDE AND CARBON CHEMICALS COMPANY
A DIVISION OF UNION CARBIDE AND CARBON CORPORATION
OAK RIDGE, TENNESSEE

UNCLASSIFIED

cy-1
Central Tec. Lib

UNCLASSIFIED

Index No. ORNL-1447

Subject Category: Physics

MAKING SMALL HOLES

John R. Sites

November 10, 1952

MASS SPECTROMETRY LABORATORY
Russell Baldock, Department Head

ISOTOPE RESEARCH AND PRODUCTION DIVISION
C. P. Keim, Director

OAK RIDGE NATIONAL LABORATORY
Operated by
CARBIDE AND CARBON CHEMICALS COMPANY
A Division of Union Carbide and Carbon Corporation
Oak Ridge, Tennessee

Contract No. W-7405-eng-26

UNCLASSIFIED

MARTIN MARIETTA ENERGY SYSTEMS LIBRARIES
3 4456 0360641 7

Index No. ORNL-1447
Physics

Internal Distribution:

1.	C. E. Center
2.	C. E. Larson
3.	L. B. Emlet
4.	A. M. Weinberg
5.	W. B. Humes
6.	E. D. Shipley
7.	C. P. Keim
8-17.	Russell Baldock
18-27.	J. R. Sites
28.	L. O. Gilpatrick
29.	W. R. Rathkamp
30	George Wells
31.	J. R. Walton
32	C. E. Normand
33.	J R. McNally, Jr.
34.	Boyd Weaver
35-37.	E. J. Murphy
38-41.	Reports Office, TID

External Distribution:

42-291.	Given distribution as shown in TID-4500 under Physics Category.

DISTRIBUTION PAGE TO BE REMOVED IF REPORT IS GIVEN PUBLIC DISTRIBUTION.

Issuing Office
Technical Information Department, Y-12 Plant
Date Issued: DEC 1 0 1952

ABSTRACT

A simple method for making small holes of the order of 0.001 inch in thin metal is described. A common sewing needle is used as a tool with a finely machined piece of steel as an anvil.

MAKING SMALL HOLES

John R Sites

An integral part of a gas inlet system to the source of a mass spectrometer is the small orifice used as a leak. To avoid any fractionation effects, the pressure on the inlet side is adjusted to 30-40 microns of mercury, with an ionization chamber pressure of 10^{-6} mm of mercury, or less. For gas flow to produce easily measured ion intensities, this leak should be about 0 001 inch in diameter. It is also desirable to have the hole round, with smooth edges.

Of several methods that have been used to make such small holes, three were considered. A small glass bulb at the end of a tube can be punctured, and the hole carefully shrunk to size. Holes of around 0. 003 inch can be drilled in thin gold or copper foil, and then peaned to reduce the size of the hole. Small needles can be made by oxidizing tungsten wire in an oxyacetylene flame, and then used to punch a hole in dimpled, thinned pieces of thin metal sheet stock.

Usually several repetitions of the forming and measuring operation must be performed. The measuring is easily done with a standard micrometer microscope, and any improvement in the method must come in the forming operation Disadvantages of the above methods have been found to be that glass leaks must be made by a skilled glass blower, peaning leaves an irregular hole, and punches or drills are subject to breaking and to making oversize holes.

After trying several methods with poor results from quite a few attempts, a very simple one was conceived. The materials needed are usually at hand in any laboratory, or are easily obtained, and no special skill is needed to successfully and consistently form acceptable holes. The material selected was 0. 005 inch tantalum, the tool was a common sewing needle, and a finely machined piece of stainless steel was used as the anvil. For use in this laboratory, the leak was mounted at the end of a 1/4 inch copper tube. The tube was threaded to take a special cap nut, which compressed a leak disk of 7/32 inch diameter between two teflon gaskets (Figure 1).

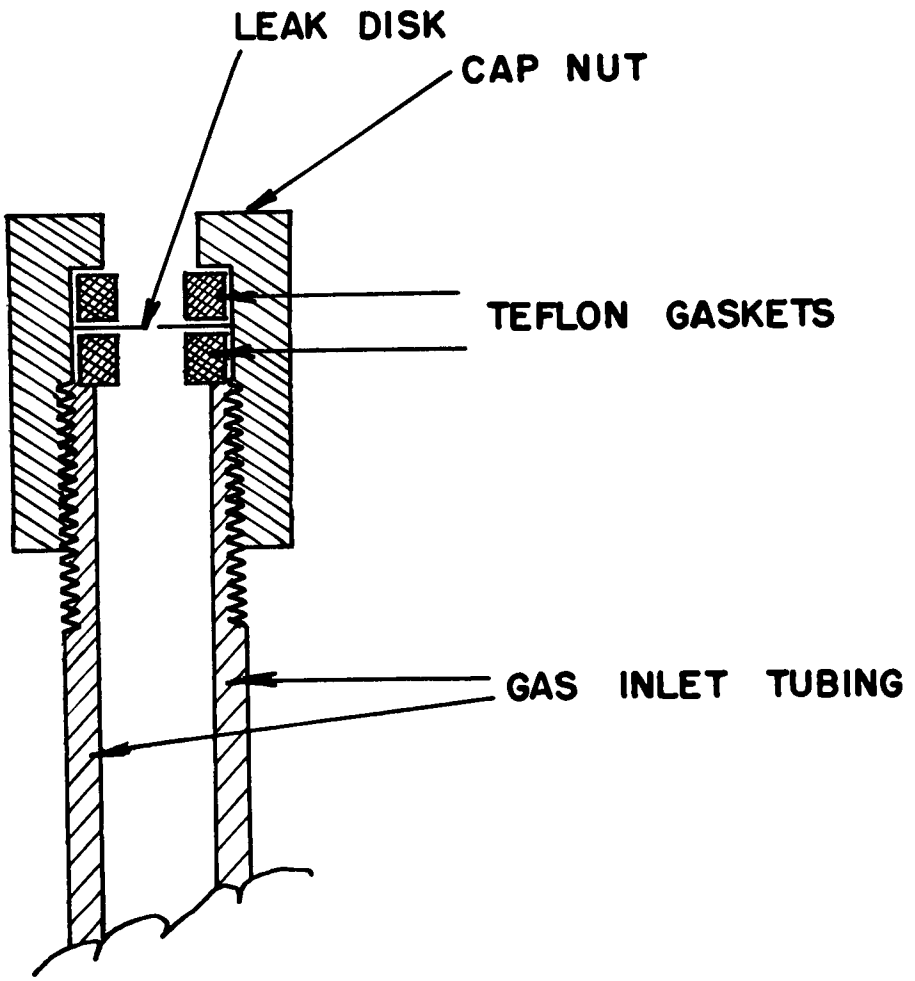

FIGURE I. LEAK DISK MOUNTING

The disks were dimpled by placing them on the anvil with the needle centered and then giving the needle a light tap with a small hammer (Figure 2a). Then with the needle held vertically in the dimple with moderate pressure, the disk is made to slide back and forth on the smooth anvil, thus cold working and thinning the intervening tantalum The soft tantalum slides easily on the anvil, but with the slightest breakthrough of the needle, the smooth feeling gives way to one of catching roughness and the hole is formed (Figure 2b) One or two attempts are sufficient to master the technique. Figure 3 shows a photomicropraph of a typical hole.

The method is easily set up, quickly performed, and consistently gives smooth, round holes of the order of 0.001 inch diameter.

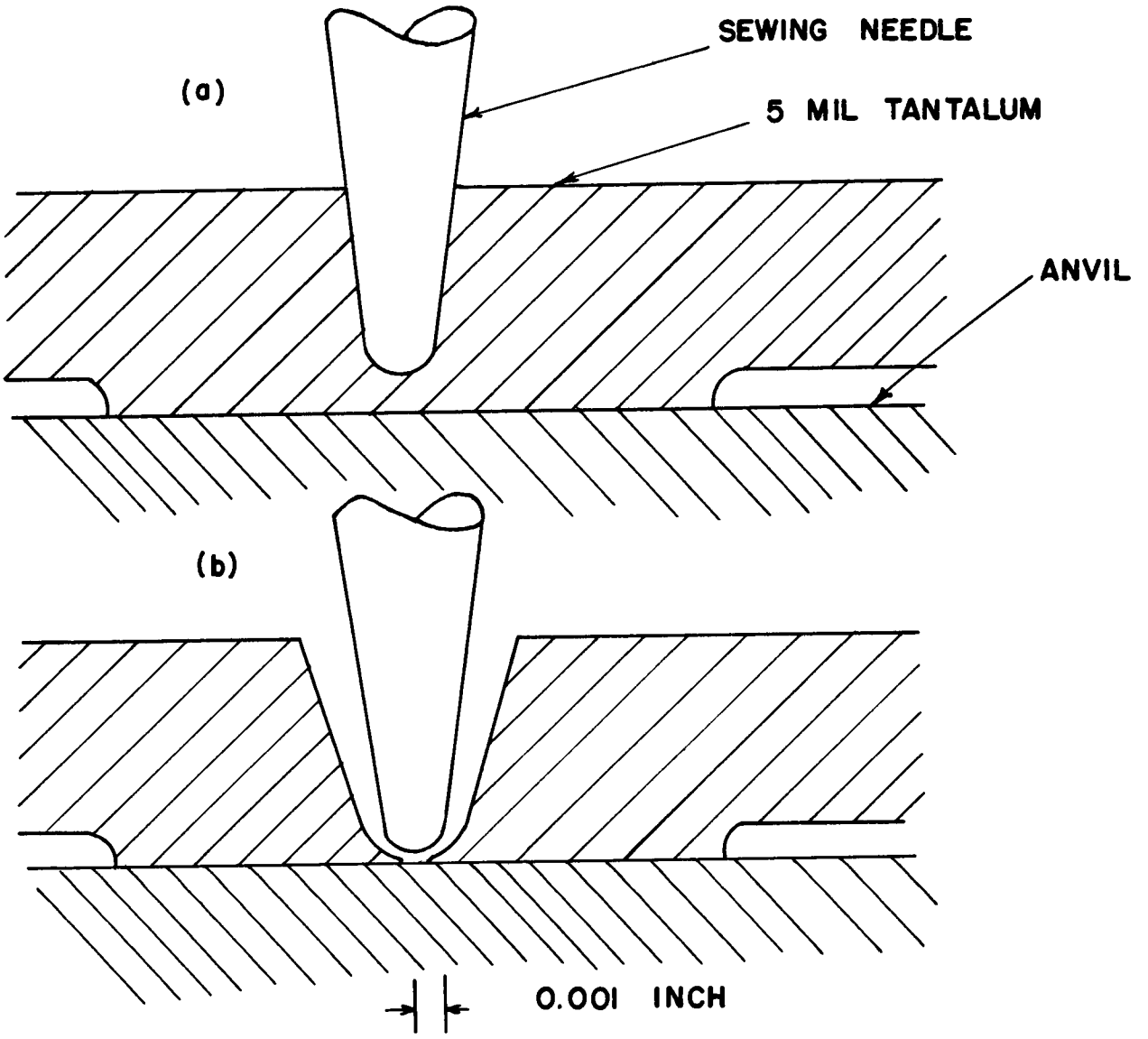

FIGURE 2. FORMING A SMALL HOLE

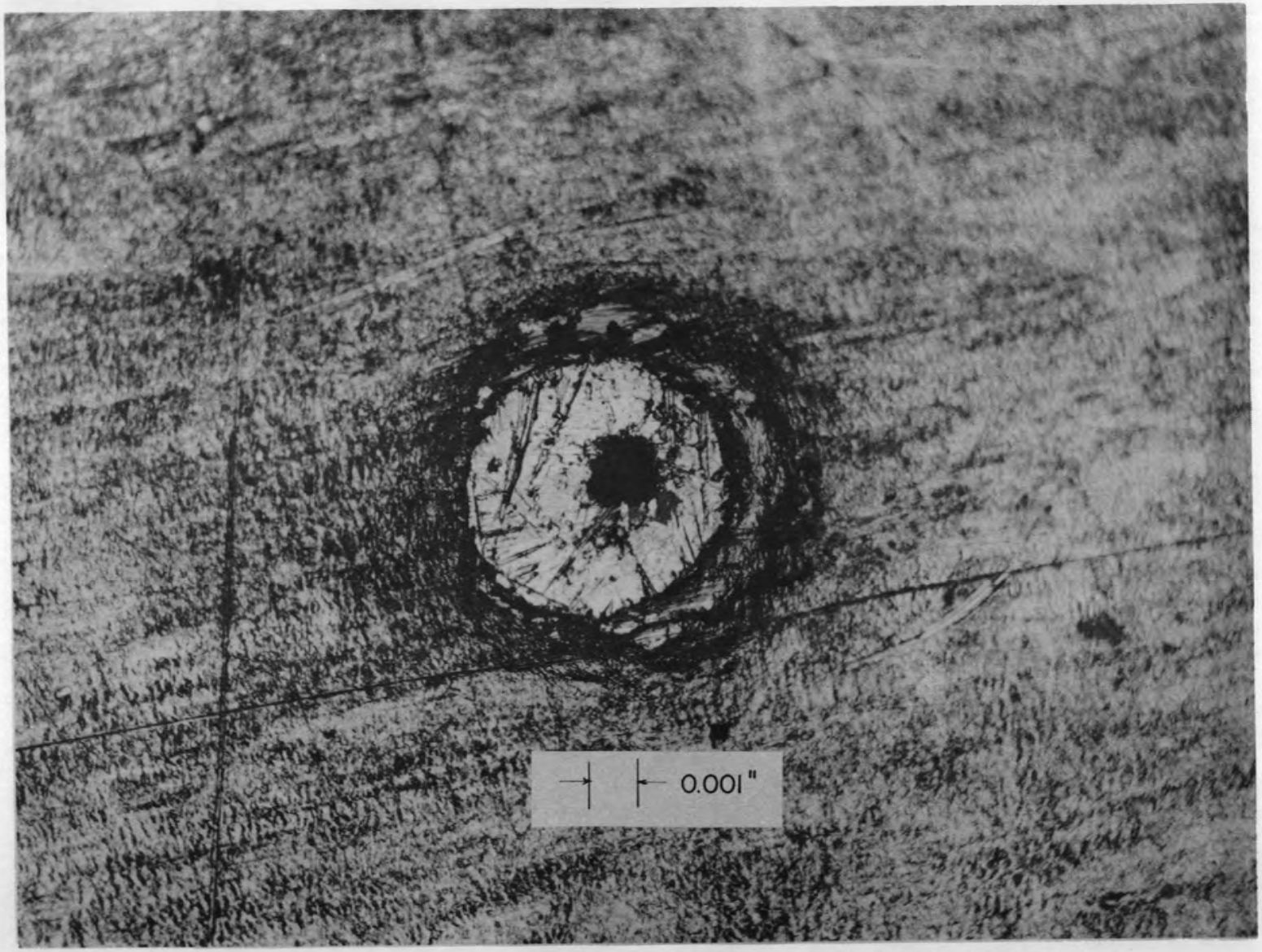

FIGURE 3. PHOTOMICROGRAPH OF A 0.001 INCH HOLE