MARTIN MARIETTA ENERGY SYSTEMS LIBRARIES
3 4456 0360900 3

[redacted]

ORNL-1129
Progress

NTRAL RESEARCH LIBRARY
DOCUMENT COLLECTION

DECLASSIFIED
CLASSIFICATION CANCELLED
By Authority of
By

AEC RESEARCH AND DEVELOPMENT REPORT

LABORATORY RECORD

ANALYTICAL CHEMISTRY DIVISION

QUARTERLY PROGRESS REPORT

FOR PERIOD ENDING SEPTEMBER 10, 1951

CENTRAL RESEARCH LIBRARY
DOCUMENT COLLECTION
LIBRARY LOAN COPY
DO NOT TRANSFER TO ANOTHER PERSON
If you wish someone else to see this document, send in name with document and the library will arrange a loan.

OAK RIDGE NATIONAL LABORATORY
U.S. ATOMIC ENERGY COMMISSION

OAK RIDGE NATIONAL LABORATORY
OPERATED BY
N CHEMICALS COMPANY
DE AND CARBON CORPORATION
UCC
FICE BOX P
. TENNESSEE

[redacted]

CLASSIFICATION CANCELLED
David R. Hamrin 9/6/2013
ADD Signature Date
Single review of CCRP-declassified documents was authorized by DOE Office of Declassification memo of August 22, 1994.

[redacted]

ORNL-1129
Progress

This document consists of 102 pages.
Copy 8 of 138. Series A.

Contract No. W-7405, eng-26

ANALYTICAL CHEMISTRY DIVISION

M. T. Kelley, Director
C. D. Susano, Associate Director

QUARTERLY PROGRESS REPORT

for Period Ending September 10, 1951

Date Issued FEB 12 1952

OAK RIDGE NATIONAL LABORATORY
Operated by
CARBIDE AND CARBON CHEMICALS COMPANY
A Division of Union Carbide and Carbon Corporation
Post Office Box P
Oak Ridge, Tennessee

[redacted]

MARTIN MARIETTA ENERGY SYSTEMS LIBRARIES
3 4456 0360900 3

[redacted]

[redacted]

DISTRIBUTION LIST

ORNL-1129
Progress

INTERNAL DISTRIBUTION

1. G. T. Felbeck (C&CCC)
2-3. Chemistry Library
4. Physics Library
5. Biology Library
6. Health Physics Library
7. Metallurgy Library
8-9. Training School Library
10-13. Central Files
14. C. E. Center
15. C. E. Larson
16. W. B. Humes (K-25)
17. W. D. Lavers (Y-12)
18. A. M. Weinberg
19. J. A. Swartout
20. E. D. Shipley
21. E. J. Murphy
22. F. C. VonderLage
23. M. T. Kelley
24. E. H. Taylor
25. A. H. Snell
26. F. L. Steahly
27. R. C. Briant
28. J. S. Felton
29. C. E. Winters
30. A. Hollaender
31. K. Z. Morgan
32. C. P. Keim
33. G. H. Clewett
34. A. S. Householder
35. D. W. Cardwell
36. E. M. King
37. C. D. Susano
38. R. B. Hahn
39. [illegible] E. Boyd
40. [illegible]. A. Lane
41. G. W. Parker
[illegible] J. W. Robinson
[illegible]. L. J. Brady
[illegible]4. H. P. House
45. O. Menis
46. C. H. Secoy
47. L. E. Burkhart
48. R. N. Lyon
49. S. A. Reynolds
50. P. F. Thomason
51. R. Rowan, Jr.
52. D. E. LaValle
53. A. R. Brosi
54. A. F. Roemer, Jr.
55. E. I. Wyatt
56. G. W. Leddicotte
57. C. Feldman
58. T. E. Willmarth
59. C. L. Burros
60. J. H. Edgerton
61. E. J. Frederick
[illegible]2. L. T. Corbin
[illegible]. O. K. Neville
6[illegible] P. M. Reyling
65. D. D. Cowen
66. S. C. Lind
67. S. D. Schiffman, K-25
68-70. Central Files (OP)

[redacted]

[redacted]

[redacted]

EXTERNAL DISTRIBUTION

71-78. Argonne National Laboratory
79-83. Atomic Energy Commission, Washington
84-87. Brookhaven National Laboratory
88-91. Knolls Atomic Power Laboratory
92-97. General Electric Company, Richland
98-101. Los Alamos
102. Mound Laboratory
103-105. New York Operations Office
106. Patent Branch, Washington
107-121. Technical Information Branch, ORE
122-125. University of California Radiation Laboratory
126-129. Carbide and Carbon Chemicals Company (Y-12)
130-133. E. I. du Pont de Nemours and Company
134-135. New Brunswick Laboratory
136. Savannah River Operations Office
137-138. Westinghouse Electric Corporation

[redacted]

[redacted]

[redacted]

Reports previously issued in this series are as follows:

ORNL-686	Period Ending March 31, 1950
ORNL-788	Period Ending June 30, 1950
ORNL-867	Period Ending October 10, 1950
ORNL-955	Period Ending January 10, 1951
ORNL-1088	Period Ending March 26, 1951
ORNL-1113	Period Ending June 26, 1951

[redacted]

[redacted]

[redacted]

[redacted]

TABLE OF CONTENTS

	Page
PUBLICATIONS	1
ABSTRACT	1
ANALYTICAL CHEMISTRY DIVISION — X-10 SITE	5
RESEARCH AND DEVELOPMENT	5
Ionic Analyses	5
Uranium, iron, nickel, and chromium in ANP fuel eutectic	5
Spectrophotometric determination of uranium in HRE test loop solutions	9
Continuous spectrophotometric determination of uranium in purex stream	9
Isolation of uranium(VI) by filter-paper partition chromatography and its quantitative determination	10
Separation of uranium(VI), iron(III), chromium(III), aluminum(III), and nickel(II) by filter-paper partition chromatography	10
Micro determination of aluminum in radioactive RaLa samples	10
Polarography of technetium	11
Total sulfur in ion-exchange resin	21
Spectrophotometric determination of molybdenum in spectrographic standards	21
Vacuum-fusion analysis of metals	22
Positive-feed micro buret	23
Radiochemical Analyses	24
Nuclear properties	24
Thermal neutron cross section for the production of radioactive copper-64	24
Decay scheme of Ce^{144}-Pr^{144}	25
Measurement of radioactivity	25
Efficiencies of scintillation gamma counters	25

[redacted]

[redacted]

[redacted]

	Page
Purex process decontamination factors using scintillation counting	26
Low-level beta measurements	27
Analysis of radioisotopes	30
Ce^{141}-Ce^{144} mixtures	30
NBS iodine-131 check samples	31
Purity of cesium-137	31
Purity of zinc-65	31
Radiochemical gas analysis	34
Noble gas analysis	34
Solvent extraction methods	35
Extraction of anionic species (niobium and tantalum)	35
Electrodeposition of uranium	36
Thermal neutron flux in slot 3 of standard sigma pile	36
Activation Analyses	37
Analytical procedures	37
Sodium, potassium, rubidium, and cesium	37
Manganese and cobalt	37
Arsenic, lead, and copper	38
Procedures for other substances	
New applications of activation analysis	39
Spectrochemical Analyses	39
Inorganic Preparations	40
Phosphors	40
Other preparations	40
Analytical Chemical Control of the HRE Solution	40
"Princo densitrol"	40
Radiation-resistant glasses	42
Q Measurement	43
Optical and Electron Microscopic Analysis of HRE Corrosion Films	43
Chemical Analysis of HRE Corrosion Films	46

[redacted]

[redacted]

 [redacted]

[redacted]

	Page
SERVICE ANALYSES	48
Ionic An	
SERVICE ANALYSES	48
Ionic Analyses	48
Radiochemical Analyses	48
Activation Analyses	48
General Radiochemical Analyses	48
Modifications to zirconium method	48
Modifications to strontium method	48
Modified mount assembly for count measurements	48
Modification to method for UX activity	49
Water Analysis Laboratory	49
Determination of boron	49
Determination of fluoride	49
Other analyses	52
Laboratory and Semi-Works Control	53
Pilot Plant Control	55
Radioisotope Production Analyses	57
HRE Analyses	57
ANALYTICAL CHEMISTRY DIVISION — Y-12 SITE	59
RESEARCH AND DEVELOPMENT	59
Analysis of Uranyl Sulfate Solutions	59
Determination of uranium by spectrophotometric methods	59
Determination of uranium(IV)	61

[redacted]

[redacted]

[redacted]

[redacted]

	Page
Uranium by specific gravity measurements	61
Trace metal determinations in uranyl salt solutions	63
Determination of halides	66
Determination of Dissolved Hydrogen in HRE Solutions	67
Determination of Uranium Trifluoride	68
Oxygen in Sodium	71
Determination of Oxygen in Lead	72
Determination of Oxygen in Helium	72
Determination of Oxygen and Nitrogen in Lithium	73
Elements of High Neutron-Capture Cross Section in Sodium	73
Determination of Metallic Corrosion Products	74
Removal of eutectic	74
Spectrographic results	74
Development of colorimetric methods	74
Colorimetric Determination of Cobalt	75
Identification of Residue in Lithium-Metal Coolant System	75
Stability of Borated Water Solutions	76
Quality Control	77
Ionic analysis laboratories	77
HRE laboratory	77
X-10 laboratory	77
SERVICE ANALYSES	81
Analytical Services for the ANP Project	81
Experimental engineering	81
Analysis of reactor fuels	81

[redacted]

[redacted]

 [redacted]

[redacted]

	Page
Analysis of alkali and alkaline earth hydroxides	82
Determination of iron in beryllium oxide	83
Determination of fluoride by the pyrohydrolytic method in the presence of glass	83
Analysis of Ores, Residues, and Leach Solutions	83
Determination of uranium in low-grade ores, residues, and leach solutions	83
Volumetric determination of aluminum in leach solutions	83
Analytical Services for the HRE Project	84
Determination of microgram quantities of fluoride	86

[redacted]

[redacted]

[redacted]

LIST OF TABLES

Table No.		Page
1	Typical Analyses of ANP Fuel Eutectic	8
2	Effect of Sulfuric Acid on the Spectrophotometric Determination of Uranium	9
3	Composition of Nonradioactive Synthetic RaLa Sample	10
4	Aluminum and Iron Determined Simultaneously with Hematoxylin	12
5	Effect of Mercury on Reduction of Pertechnetate	21
6	Sulfur in Ion-Exchange Resin	21
7	Molybdenum in Spectrographic Standard Solutions	22
8	Efficiencies of Scintillation Counters for Counting Gamma Rays	26
9	ORNL Assay of NBS Iodine-131 Solutions	32
10	"Beta-Gamma" Ratios of Zn^{65} Samples Containing P^{32} and Co^{60}	32
11	Effect of HCl Concentration on the Extraction of Nb^{95} with Methyldioctylamine in Xylene	35
12	Effect of HCl Concentration on the Extraction of Tantalum-182 with Methyldioctylamine in Xylene	35
13	Determination of Sodium, Potassium, and Cesium in Rb_2CO_3 by Ion Exchange and Activation Analysis	37
14	Determination of Cobalt and Manganese in Monitor Clips of Aluminum Alloy	38
15	Pertinent Data Used in the Analysis of Ion-Exchange Resins for Trace Amounts of Arsenic, Lead, and Copper	39

[redacted]

[redacted]

[redacted]

Table No.		Page
16	Determination of Trace Amounts of Arsenic, Lead, and Copper in Ion-Exchange Resins by Neutron Activation Analysis	39
17	Phosphors Prepared for the Physics Division	41
18	Gross Beta Activity Determined by Modified Sample-Mounting Technique	50
19	Boron in Inconel Alloys and Boric Acid Samples	53
20	Fluoride by Modified Willard-Winter Distillation Method	55
21	Summary of Analytical Service Work at X-10 Site for Period June 27 Through September 26, 1951	56
22	Precision in the Determination of the Factor in Differential Colorimetry Applied to Uranyl Sulfate Solutions	60
23	Determination of Uranium(VI) in Uranyl Sulfate Solutions by Differential Colorimetry	62
24	Determination of Uranium by Specific Gravity Method — Calculated Values vs. Values from Standard Curve	63
25	Determination of Cobalt in UO_2SO_4 Solution — Recovery in Prepared Samples	64
26	Determination of Titanium in Uranyl Sulfate Solution — Recovery in Prepared Samples by Thymol Method	64
27	Determination of Manganese in UO_2SO_4 Solutions	65
28	Determination of Tungsten by the Stannous Chloride—Thiocyanate Method	66
29	Determination of Iodine in Uranyl Sulfate Solution — Comparison of Two Methods	67

[redacted]

[redacted]

[redacted]

[redacted]

Table No.		Page
30	Determination of Uranium Trifluoride — Comparison of Results by Two Methods	70
31	Test Results for Determination of Oxygen in Sodium	71
32	Oxygen Content of Unpurified Helium	73
33	Ionic Analysis Laboratory Control Program	78
34	HRE Analytical Control Program	79
35	Uranium Analytical Control Program (X-10 Laboratories)	80
36	Comparison of Volumetric and Gravimetric Test Results for Aluminum in Leach Solutions	84
37	Summary of Analytical Service Work at Y-12 Site	85

[redacted]

[redacted]

[redacted]

LIST OF FIGURES

Fig. No.		Page
1	Inconel Capsule	6
2	Furnace Assembly for Removal of ANP Fuel Eutectic from Sample Capsule	7
3	Electrolysis Cell Assembly Used in Polarography of Technetium	13
4	Polarogram of a Solution of 1.59×10^{-4} *M* NH_4TcO_4 and 0.1 *M* KCl, pH 9.3	14
5	Polarogram of a Solution of 1.59×10^{-4} *M* NH_4TcO_4 and 0.1 *M* KCl, pH 5.9	15
6	Polarogram of a Solution of 1.59×10^{-4} *M* NH_4TcO_4 and 0.1 *M* KCl, pH Approximately 7	16
7	Test of the Equation of the Wave (Fig. 6) of 1.59×10^{-4} *M* NH_4TcO_4 in 0.1 *M* KCl	17
8	Polarogram of a Solution of 1.59×10^{-4} *M* NH_4TcO_4, 0.1 *M* NH_4Cl and 0.01% Gelatin, pH 8.5, Potential Range of 0.0 to -1.2 Volts	18
9	Polarogram of a Solution of 1.59×10^{-4} *M* NH_4TcO_4, 0.1 *M* NH_4Cl and 0.01% Gelatin, pH 8.5, Potential Range of -0.8 to -1.8 Volts	19
10	Polarogram of a Solution of 1.59×10^{-4} *M* NH_4TcO_4, 0.1 *M* NH_4Cl and Approximately 0.03% Gelatin, pH 7.3.	20
11	High-Vacuum End of Vacuum-Fusion System	23
12	Automatic Evaporator	28
13	Multiple Relay for Automatic Evaporator	29

[redacted]

[redacted]

[redacted]

Fig. No.		Page
14	Ce^{141} in Ce^{141}-Ce^{144} Mixture	31
15	Aluminum Absorption Curves of Zinc-65 Samples	33
16	Gross Beta Mount for Noble Gas Analysis	34
17	Formation of Uranium Oxide on Surface of Type-347 Stainless Steel After Five Weeks Exposure to 0.42 *M* Uranyl Sulfate Solution	45
18	Modified Mount Assembly for Count Measurements	49
19	Boron Distillation Apparatus	51
20	Methanol Purification Apparatus	52
21	Dissolution Apparatus for Samples Containing Boron	53
22	Fluoride Distillation Apparatus	54

[redacted]

[redacted]

[redacted]

PUBLICATIONS

Y-B31-270 *Quarterly Progress Report for Period Ending June 27, 1951* by C. D. Susano, Analytical Chemistry Division, Y-12 (July 9, 1951).

Y-B31-273 *Clarity of Borated Water in Concrete Tanks,* by H. P. House and C. D. Susano, Analytical Chemistry Division, Y-12 (July 24, 1951).

Y-B31-275 *Statistical Quality Control Report,* by C. D. Susano, R. Rowan, Jr., and R. L. McCutchen, Analytical Chemistry Division, Y-12 (June 1951).

Y-B31-282 *Statistical Quality Control Report,* by C. D. Susano, R. Rowan, Jr., and R. L. McCutchen, Analytical Chemistry Division, Y-12 (August 30, 1951).

Y-B31-283 *Analytical Chemistry - ANP Progress, Quarterly Progress Report for Period Ending August 31, 1951* by M. T. Kelley and C.D. Susano (August 30, 1951).

Y-B31-284 *Corrosion of Metal Containers by Saturated Alkali and Alkaline Earth Metal Hydroxide Solutions* by J. C. White, Analytical Chemistry Division, Y-12 (September 6, 1951).

[redacted]

[redacted]

ABSTRACT

ANALYTICAL CHEMISTRY DIVISION - X-10 SITE

The establishment of analytical testing procedures for determining the corrosiveness of Inconel by the ANP fuel eutectic is described. Spectrophotometric methods were evaluated as possible rapid analytical methods for assaying radioactive solutions for uranyl ion, molybdenum, and aluminum. A new procedure is described for sulfur in ion-exchange resins. The study of the application of filter-paper partition chromatography to the separation of uranium from other metals and to other cation separations has been extended. The results of initial studies on the polarography of technetium are given.

The thermal neutron cross section for production of copper-64 is reported. A tabulation of efficiencies of scintillation gamma counters is presented. A proposed low-level laboratory for radiochemical work is described, and a novel automatic evaporator is discussed. Rapid methods for analysis of Ce^{141}-Ce^{144} mixtures and for testing purity of zinc-65 preparations have been devised. Apparatus for noble gas radioassay is being developed. Further investigation of solvent extraction of anionic species has been made, resulting in development of a rapid method for separating niobium and tantalum.

Analytical procedures adaptable to neutron activation analysis for trace quantities of certain elements are discussed and new applications of activation analysis indicated.

Work was completed on "Photographic Photometry" a revised and enlarged version of a manual on emulsion calibration and spectrochemical photometry.

Modifications were made to the radiochemical methods for zirconium, strontium, and UX activity. A revision is suggested in the design of the sample mount assembly for count measurements. Methods are described by which boron and fluoride may be determined in a variety of samples.

A series of 49 lithium compounds was prepared for the Physics Division for evaluation as phosphors.

In relation to the continuous control of the HRE soup solution, laboratory evaluation was made of the recently received Princo Densitrol instruments. A report is made of the response of the instrument to such variables as temperature, flow, bubble content, and density of the uranyl sulfate solution. Modifications to the instrument are suggested and a program for the further evaluation of the instrument after installation in an HRE test loop is suggested. The

[redacted]

suitability of a synthetic mica as a replacement for the Q-coil ceramic is discussed. The status of neutron-irradiation tests on radiation-resistant, neutron-absorbing glasses is indicated.

The corrosion problems of the HRE gave rise to a study of the effect of certain variables on the formation of surface oxide films on type-347 stainless steel and the effect on such films of conditions approximating those of the HRE. Optical and electron microscopy and chemical analysis were employed to elucidate the nature of the corrosion attack. The results of the work to date and status of the program are reported.

ANALYTICAL CHEMISTRY DIVISION — Y-12 SITE

Investigation has continued of methods for the analysis of uranyl sulfate solutions used in HRE test loops. Present studies, which are as yet incomplete, indicate that differential spectrophotometry compares favorably with volumetric methods for the determination of uranium in relatively pure uranyl sulfate solutions in the range 20 to 50 mg/ml. In this method, the characteristic absorbancy of uranyl sulfate solutions, without added chromogenic agent, is utilized. A rapid method which appears to be equally as satisfactory as the differential spectrophotometric method has also been developed for the determination of uranium in UO_2SO_4 solution by measurement of the specific gravity of the solution. The accuracy of the determination is 1% or better in the range 5 to 75 mg of uranium per ml. An equation relating uranium concentration, specific gravity, and normality of the solution with respect to free sulfuric acid has been formulated. The effect of temperature variations is being studied. A slight modification of a previously described method for the separation of trace quantities of uranium(IV) from UO_2SO_4 solutions has resulted in the elimination of a tendency toward high results in the subsequent determination of the uranium(IV). Existing colorimetric methods for the determination of manganese, cobalt, and molybdenum have been suitably modified for the determination of trace quantities of these elements in UO_2SO_4 solutions, and the development of methods for the determination of titanium and zirconium appear to be nearing completion. The determination of trace quantities of the halide ions, Cl^-, Br^-, and I^- in HRE solutions has been successfully accomplished by means of an argentometric titration. A colorimetric method has been adapted to the determination of dissolved hydrogen in HRE solutions.

Additions to the required determinations for HRE corrosion test solutions are listed and certain modifications of methods are noted. Fluoride in concentrations approximating 0.1 μg/ml can now be determined in corrosion test solutions by a colorimetric method.

A limited amount of development work has continued on the *n*-butyl bromide method for the determination of oxygen in sodium. The standard deviation for this method, calculated from accumulated test results on duplicate samples, is 0.003%, rather than 0.005%, which was realized in earlier tests of this method. Studies are being made of refinements of this method so that it may be applied in the range of 0.001 to 0.01% oxygen. It appears that, with minor modifications, the method may be used to determine oxygen in NaK.

Preliminary tests directed toward the adaptation of the method of

Pepkowitz and Judd (for oxygen in sodium) to the determination of oxygen and nitrogen in lithium do not appear promising.

Methods in use at KAPL for the determination of certain contaminants (rare earths, carbon, cesium, and mercury) in sodium are being studied for possible use in these laboratories.

Aluminum and magnesium have been added to the list of impurities which are determined in sodium, necessitating the addition of an 8-hydroxyquinoline precipitation step to the separation procedure.

An apparatus is under construction for use in determining the oxygen content of metallic lead.

The oxygen content of inert gases (principally helium) is now being determined by a colorimetric method which gives excellent precision below 25 ppm; at higher concentrations of oxygen the precision drops off sharply. An alternate method will be tested as soon as fabrication of the required apparatus is complete.

Colorimetric methods are applied to determine the minor components (iron, nickel, chromium, molybdenum, platinum) of reactor fuel samples consisting of fluoride salt mixtures. The method used for platinum is reviewed briefly. Two colorimetric methods for low concentrations of cobalt in fluoride salt mixtures and in alkali hydroxides, were found to be too insensitive for the purpose. Uranium is determined by a potentiometric titration and fluoride by acidimetric titration of the HF collected during pyrohydrolysis of the salt mixture. The presence of ground glass in uranium tetrafluoride was experimentally demonstrated to have no detrimental effect on the normal pyrohydrolysis of this salt. Beryllium and alkali metals were also determined in reactor fuels.

A method has been developed for the determination of uranium(III) which depends upon the measurement of the hydrogen liberated by the reaction of UF_3 with HCl. A second, less precise method is based on the total reducing power of the sample.

Corrosion test samples of alkali and alkaline earth hydroxides are successfully removed from the metal sample tubes by dissolution in water without significant attack of the tube by the alkaline solutions. Residues are dissolved in acid or fused with pyrosulfate to render them soluble. Corrosion products (iron, nickel, chromium, molybdenum, and copper) are determined by colorimetric methods when present in low concentrations, or by volumetric or gravimetric methods when higher concentrations are encountered.

A spectrophotometric method was used to determine the iron content of a series of beryllium oxide samples. Rather high concentrations of beryllium and sulfate ions were found to offer no interference.

A search is being made for a more satisfactory method than the *l*-ascorbic acid or the fluorometric methods for determining uranium in concentrations of 100 to 500 ppm in ores.

The blank of the modified Model R fluorometer has been found to be equivalent to 0.05 μg of uranium so that the minimum amount detectable with this instrument must exceed this value.

A volumetric method for the determination of aluminum in leach solutions without separation of the aluminum, is reviewed.

A brief summary is given of the findings of the quality control program for the Ionic Analysis, HRE, and X-10 laboratories, including tables of statistical values based on test results.

A crystalline material which was deposited in lithium at a hot-cold junction in a coolant test system, was identified as a mixture of slightly contaminated lithium hydride and hydroxide.

Tests are being carried out to determine the composition of the least expensive aqueous solution of salts of boron which will provide a 1% boron concentration and retain its clarity when in contact with concrete, iron, and Inconel at room temperatures. A potassium tetraborate solution (2% boron) was found to retain its clarity for at least four weeks in contact with concrete. Cheaper solutions containing borax and potassium tetraborate are now under test.

During this quarter, 18,986 determinations were made on 3,831 samples, or an average of five determinations per sample. The backlog of samples decreased from 1,353 to 985 during the quarter.

ANALYTICAL CHEMISTRY DIVISION—X-10 SITE

RESEARCH AND DEVELOPMENT

IONIC ANALYSES

P. F. Thomason

Uranium, Iron, Nickel, and Chromium in ANP Fuel Eutectic (A. D. Horton). Development work[1] has been completed on the methods and apparatus required for the determination of corrosion products formed during neutron irradiation of ANP fuel eutectic in Inconel capsules.

Polarographic methods were studied qualitatively to determine the feasibility of analyzing for iron, chromium, and nickel in solution with a common supporting electrolyte. Test solutions (3-ml volumes) of 0.1 *M* potassium chloride and containing 10 μg each of iron, chromium, and nickel were analyzed polarographically. A fairly well-defined wave was obtained for chromic ion at $E_{1/2}$ = -0.85 v, but iron at $E_{1/2}$ = -1.3 v and nickel at $E_{1/2}$ = -1.1 v gave ill-defined waves. When the solution was made alkaline with 0.15 ml of 28% ammonium hydroxide a nickel wave was obtained at $E_{1/2}$ = -1.02 v. Not enough separation of the waves was indicated for quantitative analysis.

In an attempt to shift the half-wave potentials, these elements, in a solution identical to the above, were oxidized to their highest valence state by heating with potassium persulfate. Again a fairly well-defined wave was obtained for chromate ion and, after the solution was made alkaline with ammonium hydroxide, a fairly well-defined nickel wave was obtained. In order to determine whether the residual fluoride in the ANP fuel eutectic sample might give a favorable shift in the half-wave potentials, a test solution was prepared containing 1 g of ANP fuel eutectic and 1 mg each of iron, nickel, and chromium in a 100-ml volume. The uranium in 1-ml volumes of the eutectic solution was separated from the corrosion products by extraction with 30% tributyl phosphate. Polarographic analyses were then made of the 1-ml volumes of the uranium-free solution using the following supporting electrolytes: 0.1 *M* potassium chloride, 0.1 *M* pyridine—0.1 *M* pyridinium chloride, 1 *M* potassium oxalate, and finally 0.1 *M* ammonium oxalate—0.1 *M* ammonium citrate in acetic acid—sodium acetate buffer. In each case, only the wave of the element which was favored by the supporting electrolyte was obtained.

It was concluded that this method would not be feasible after considering the high level of radiation of future samples, because the insufficient resolution of the half-wave potentials would necessitate preparing two separate samples for the complete polarographic analysis. The spectrophotometric methods of this laboratory will offer comparable sensitivity and require less physical handling of the sample.

Standard spectrophotometric absorption curves for the determination of iron,[2] chromium,[3] and nickel[4]

---

[1] A. D. Horton, "Analysis of Sodium Fluoride—Potassium Fluoride—Uranium Fluoride Eutectic for Chromium, Nickel, and Iron," *Analytical Chemistry Division Quarterly Progress Report for Period Ending June 26, 1951*, ORNL-1113, p. 19.

[2] W. B. Fortune and M. G. Mellon, "Determination of Iron with *o*-Phenanthroline," *Ind. Eng. Chem., Anal. Ed.* 10, 60 (1938).

[3] A. Moulin, "Dosage colorimetrique du chrome," *Bull. soc. chim. France* 31, 295 (1904).

[4] L. G. Bassett, "Determination of Nickel in Brown and Orange Oxides," *Manual of Analytical Methods*, Vol. III, Pt. 2, A-2912, pp. 172-3 (Jan. 1946).

in the ANP fuel eutectic have been prepared as follows: A standard synthetic solution was made by dissolving 1 g of the pure eutectic in a mixture of nitric and boric acids, adding 1 mg each of iron, chromium, and nickel, and diluting to 100 ml.

The percentage transmittance of volumes of the standard solutions containing 0, 10, 20, and 30 μg of each element was measured with the Beckman Model B spectrophotometer, and the points plotted on one-cycle semilog graph paper. In each case a straight line was produced showing conformity to Beer's law. The presence of the eutectic with moderate but unknown amounts of fluoride apparently did not alter the conformity to Beer's law or the sensitivities of the methods.

The samples to be analyzed for the corrosion products of Inconel were delivered from the graphite reactor encased in an Inconel capsule (Fig. 1) containing 1 g of ANP fuel eutectic and one of two types of Inconel test bars—either a bar of known weight (0.20 to 0.23 g) approximately 0.100 in. by 0.025 in. by 0.375 in. with a rectangular cross section, or a bar exactly 0.075 in. in diameter and 0.375 in. long with a cylindrical cross section. These samples were of four types: natural uranium thermally treated, natural uranium thermally treated and neutron irradiated, enriched uranium thermally treated, and enriched uranium thermally treated and neutron irradiated.

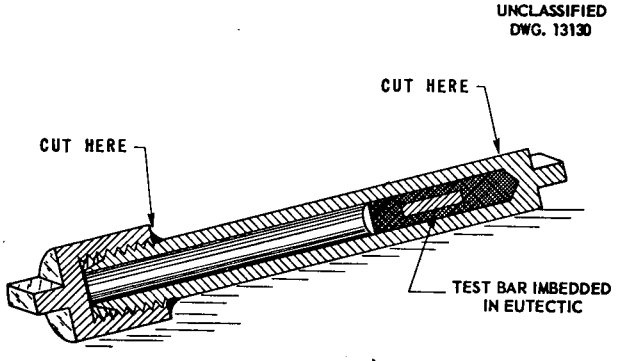

Fig. 1 - Inconel Capsule.

Because of the high level of beta and gamma activities of the neutron-irradiated samples, they were prepared for analysis in the "hot" cells of the Physics of Solids Institute. The Argonne National Laboratory's "Master-Slave Manipulator"[5] is used for handling materials in these cells.

The apparatus designed by A. D. Horton and H. L. Hemphill for melting the eutectic is shown in Fig. 2. The furnace is constructed from a 12-in. length of 1.5-in. porcelain combustion tubing wound with two 4-in. semicylindrical sections of 1.5-in.-diameter combustion-furnace heating elements. The thermocouple is placed next to the outside tube wall, and the whole heating unit is covered with a thick layer of asbestos cloth and cement. About 4.0 amp and 130 v are required to produce the temperature of 900°C necessary for removing the eutectic.

The bracket holding the tube furnace moves up and down the supporting post on ball-bearing rollers. The furnace assembly is counterbalanced by a lead-filled brass tube, which moves up and down inside the post. A cable connects the furnace and counterweight and passes over a pulley at the top of the post.

The capsules are opened at both ends by use of a South Bend lathe and a Handy Grinder provided with a carborundum cutting wheel. This equipment was adapted to remote control manipulation by C. C. Webster of the

[5] H. L. Hull, R. C. Goertz, and K. R. Ferguson, *New Hot Laboratories at Argonne*, ANL-4385, October 1949.

Metallurgy Division. The cap is removed by cutting through the weld at its base and unscrewing it with a crescent wrench. The other end is cut off just at the end of the cavity (Fig. 2).

The capsule is placed, threaded end down, into the stainless steel vacuum apparatus (Fig. 2). The furnace tube is lowered over the apparatus, which rests on a graphite block, and the capsule is heated in an atmosphere of argon to 900°C. After 5 min at this temperature the stopcock to the evacuated flask is opened for approximately 30 sec, and the molten eutectic and the test bar are drawn by vacuum into the platinum cup in the bottom of the apparatus. The furnace is then cooled to 100°C. The eutectic is removed from the platinum cup (the molten eutectic adheres to most metals except platinum) and weighed in a platinum crucible by use of a Gram-atic balance operated by remote control. The mass is fused with five times its weight of boric

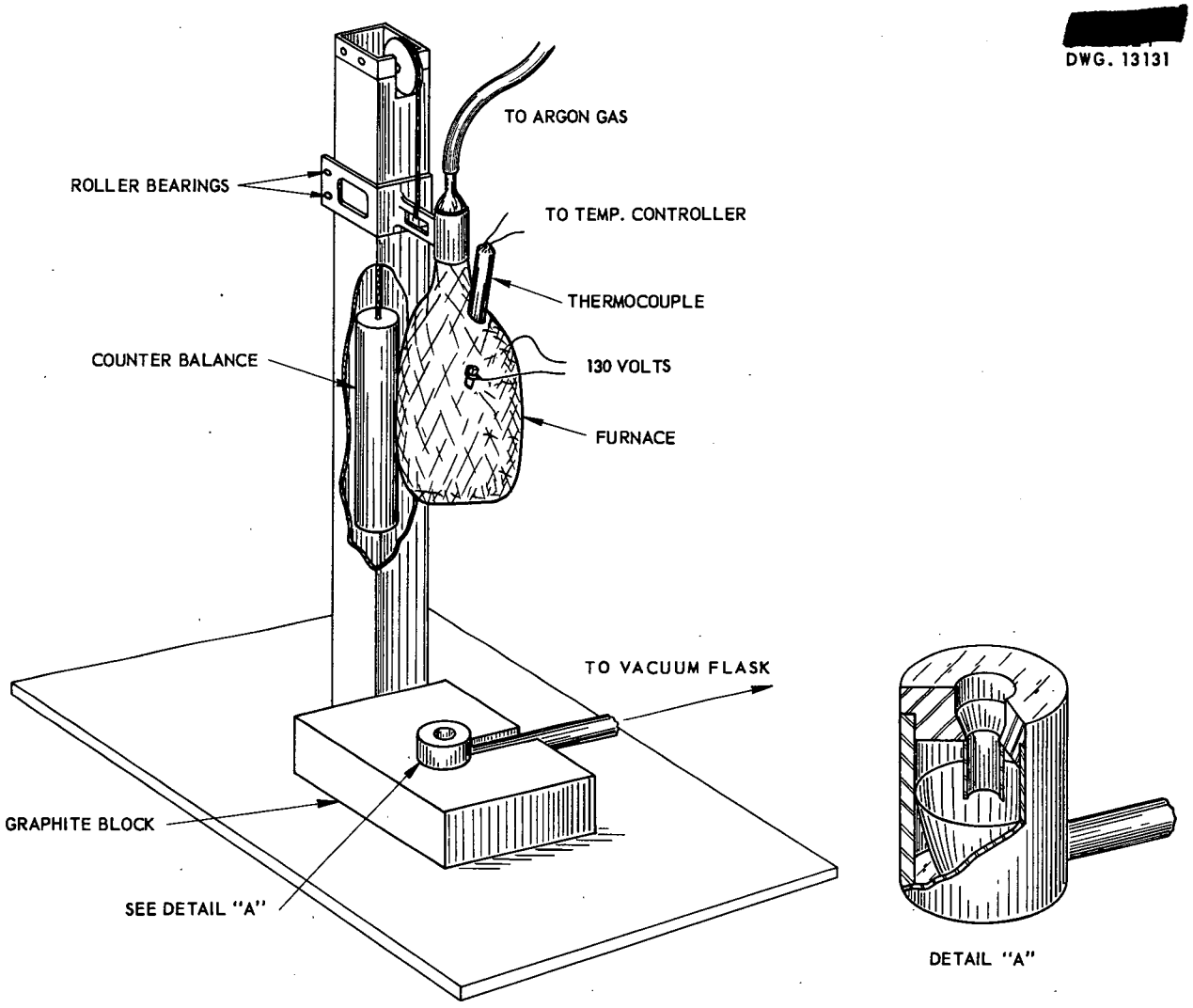

Fig. 2 - Furnace Assembly for Removal of ANP Fuel Eutectic from Sample Capsule.

acid by heating for 10 min over a blast burner. The contents of the crucible are dissolved by boiling in concentrated nitric acid. The dissolved sample is diluted with water to a volume which gives a concentration of approximately 10 mg of eutectic per ml of solution. The sample is then transferred to the laboratory for the spectrophotometric determination of iron, chromium, and nickel, and the potentiometric determination of uranium.

Table 1 shows typical results for each of the four types of samples. In capsules which contained rectangular cross section test bars and uranium oxide impurity, considerable difficulty was encountered in removing the sample. Even at 900°C, only a small portion of the sample was recovered and the test bar remained inside the capsule. According to Webster it is not desirable to heat the capsule above this temperature, because the grain boundary of Inconel

TABLE 1

Typical Analyses of ANP Fuel Eutectic

ANP SAMPLE NO.	SAMPLE TYPE	TEST BAR CROSS SECTION	SAMPLE WEIGHT (g)	RESULTS ppm Fe	Cr	Ni	% U	REMARKS
BN	Natural uranium thermally treated	Rectangular	0.7147	110	70	210	53.6	Theoretical U for all samples was 53.8%
CN	Natural uranium thermally treated	Rectangular	0.0869	663	547	316	49.8	
EN	Natural uranium thermally treated and neutron irradiated	Rectangular	0.2188	731	323	760	51.3	
FN	Natural uranium thermally treated and neutron irradiated	Rectangular	0.7434	1328	276	1984	52.6	
6	Enriched uranium thermally treated and neutron irradiated	Cylindrical	0.1359	1858	918	1030	35.7	Original batch from which these samples were taken contained uranium oxide impurity
7	Enriched uranium thermally treated and neutron irradiated	Cylindrical	0.1098	5351	455	683	41.6	
8	Enriched uranium thermally treated	Cylindrical	0.1182	8249	1000	1058	33.7	
9	Enriched uranium thermally treated	Cylindrical	0.0778	15263	3053	1607	28.7	

would be altered. This would invalidate part of the metallurgical analysis of the capsule and the test bar.

Spectrophotometric Determination of Uranium in HRE Test Loop Solutions (J. M. Chilton). The feasibility of a spectrophotometric technique for determining the uranium content of HRE test loop solutions was investigated by Menis *et al.*[6] Their work was extended to determine the effect of free sulfuric acid on the spectrophotometric measurement of uranium, since the test solutions contain free sulfuric acid.

The data obtained in this study are reported in Table 2.

TABLE 2

Effect of Sulfuric Acid on the Spectrophotometric Determination of Uranium

Wave length, 420 mμ

Cell thickness, 1 cm

Reference liquid, standard uranyl sulfate solution containing 25 mg uranium per ml of free H_2SO_4

Test solution, standard uranyl sulfate solution containing 25 mg uranium per ml and the indicated volume of free H_2SO_4

VOLUME % OF FREE H_2SO_4 IN TEST SOLUTION	OPTICAL DENSITY OF TEST SOLUTION
0.02	-0.017
0.04	-0.026
0.08	-0.021
0.12	-0.011
0.16	-0.008
0.20	-0.001
0.24	-0.001
0.28	+0.005
0.32	+0.008

[6] O. Menis, C. K. Talbot, F. E. Jenkins, and J. E. Lee, "Analysis of Uranyl Sulfate Solutions," (this report).

These data show that a free sulfuric acid content of the test solution of either less than 0.02% or of between 0.1 and 0.5% will give an error of less than approximately 0.015 in optical density. From the data of Menis *et al.*, this would correspond to 0.3 mg/ml of uranium, or a 1% error in a 30 mg/l sample. Higher precision may be obtained in the analysis of a given set of samples by adjusting the sulfuric acid content of the reference solution to that of the sample.

Continuous Spectrophotometric Determination of Uranium in Purex Stream (J. M. Chilton). The Chemical Technology Division was interested in the continuous determination of uranium in the Purex stream. It should contain very little uranium, but might contain a small amount as uranyl nitrate in 2 *N* nitric acid, together with other minor constituents.

The possibility of using spectrophotometric absorption measurements for this determination was checked by determining the spectrophotometric absorption of pure uranyl nitrate in 2 *N* nitric acid in both the visible and near ultraviolet regions of the spectrum. It was found that such solutions gave continuous absorption at wave lengths below approximately 330 mμ, regardless of uranium content. This is probably caused by the nitrate ion or some decomposition product of nitric acid. In the visible region maximum absorption was found to occur at 416 mμ. The height of the absorption band at this wave length indicated that uranium concentrations as low as 10 mg/l could be detected using an absorption cell with a 10-cm light path. Radiation-resistant glass would be required for the cell windows if such a method were used for analysis of the Purex stream.

In addition to spectrophotometric absorption measurements, the measurement of fluorescence of the stream samples is being considered. Preliminary results have been erratic at low uranium concentrations.

Isolation of Uranium(VI) by Filter-Paper Partition Chromatography and Its Quantitative Determination (H. P. Raaen). The study of the separation and estimation of microgram and submicrogram quantities of uranium(VI) by filter-paper partition chromatography with water-saturated 2-methyltetrahydrofuran has been extended. The effectiveness of this method of separating uranium(VI) from a number of metal ions is being determined using radioisotopes. By the techniques of radioautography and alpha counting, the exact loci of the ions on the chromatograms is being established. An apparatus has been constructed which permits elution of the separated uranium(VI) directly into a microelectrolysis cell for subsequent polarographic determination. It is planned to issue an ORNL report when the work is completed in the near future.

Separation of Uranium(VI), Iron(III), Chromium(III), Aluminum(III), and Nickel(II) by Filter-Paper Partition Chromatography (H. P. Raaen). The separation of uranium(VI), iron(III), chromium(III), aluminum(III), and nickel(II) is of interest in corrosion problems of the HRE program and in the RaLa process. Experiments have been made to determine the possibility of separating these cations in one operation by using the nonspecific reagent 8-quinolinol in combination with filter-paper partition chromatography. Such factors as composition of eluent, acidity of test solution and eluent, and modifications to the adsorptive medium have been considered briefly. The work is still in the exploratory stage.

Micro Determination of Aluminum in Radioactive RaLa Samples (J. M. Chilton). In anticipation of the receipt of certain highly radioactive samples from the RaLa process, possible methods for the determination of aluminum in microgram quantities were investigated.

A nonradioactive synthetic RaLa sample was prepared by dissolving analytical grade reagents in distilled water. The composition is shown in Table 3.

TABLE 3

Composition of Nonradioactive Synthetic RaLa Sample

Concentration of Versene* = 0.036 *M*

pH = 6.3 (by addition of $NaHCO_3$)

METAL	METAL ADDED AS	CONCENTRATION OF METAL (ppm)
Al	$NH_4Al(SO_4)_2 \cdot 12H_2O$	60
Cr	$Cr_2(SO_4)_3$	48
Fe	$NH_4Fe(SO_4)_2 \cdot 12H_2O$	48
Ni	$NiSO_4 \cdot 7H_2O$	48
U	UO_2SO_4	10

*Disodium dihydrogen versenate.

Since high radioactivity limits sample size, only colorimetric and fluorometric methods for aluminum determination were considered.

Iron interferes in most aluminum determination methods, therefore, an attempt was made to extract the iron from the sample. The synthetic sample was extracted with diethyl ether saturated with HCl. This procedure

was discarded because of inefficient separation, and a method which was originated for biological samples[7] was investigated. The procedure was carried out simultaneously on a blank of reagents and on 0.1 ml of synthetic sample. The final manipulation in this procedure is a colorimetric determination with Alizarin Red S. The results obtained were so erratic that no further work was done with this reagent.

The separation of iron and aluminum, using 8-hydroxyquinoline, according to the procedure of Gentry and Sherrington[8] was investigated next. Aqueous solutions of aluminum and iron were taken in various ratios and treated with $HClO_4$. Both the removal of iron as the oxine complex and the conversion of it to ferrocyanide resulted in very low values for the spectrophotometric determination of aluminum, and no correlation could be obtained between the results and the aluminum content.

The simultaneous colorimetric determination of iron and aluminum, using hematoxylin, has been successful for several types of samples. The technique of Fassett and O'Connor[9] was modified in order to destroy the Versene with perchloric acid. A considerable number of synthetic samples containing aluminum and iron were analyzed by the following technique which gave answers accurate to 10% for iron and aluminum: Redistill all water to be used. Use only Pyrex glassware in contact with the samples. Place sample containing 0 to 10 μg aluminum in a 50-ml volumetric flask. Add 2 drops concentrated $HClO_4$. Heat to fumes. Add 10 ml H_2O and bring to boil. Cool to room temperature and add 0.25 ml saturated $(NH_4)_2CO_3$ solution. Add 10 ml buffer (pH 6) solution, 1 ml 1% starch solution, 1 ml 0.1% hemotoxylin solution, and 2 ml saturated $(NH_4)_2$ CO_3 solution. Let stand 4 to 6 min, add 1 ml 30% acetic acid. Make to volume, read optical densities at 590 mμ and at 710 mμ against a reference of reagent blank.

From the values of the extinction coefficients of aluminum and iron at the two wave lengths selected, the concentration of each can be calculated by the use of simultaneous equations. Data are given in Table 4.

Further work is in progress on fluorometric methods for microgram amounts of aluminum using morin according to the method proposed by White and Lowe[10] and modified by Kavanagh.[11]

Polarography of Technetium (H. H. Miller). A study of the polarographic behavior of technetium was started by Rogers[12] at ORNL. Rogers carried out preliminary work on material supplied by G. E. Boyd of the Chemistry Division. The purity of the material was questionable, since it was known to contain about 1% rhenium and possibly other impurities. Rogers used both dropping mercury and stationary platinum electrodes. These were

(7) J. Cholak, D. M. Hubbard, and R. V. Story, "Determination of Aluminum in Biological Material," *Ind. Eng. Chem., Anal. Ed.* 15, 57-60 (1943).

(8) C. H. R. Gentry and L. G. Sherrington, "Direct Photometric Determination of Aluminum with 8-Hydroxyquinoline," *Analyst* 71, 432-8 (1946).

(9) G. W. Fassett and G. B. O'Connor, "A Rapid Spectrophotometric Method for the Determination of Aluminum," *Chemical Research, Analytical, Report for Period Ending February 1, 1944*, CC-1325.

(10) C. E. White and C. S. Lowe, "Determination of Aluminum by Photometric Fluorescence Measurement," *Ind. Eng. Chem., Anal. Ed.* 12, 229 (1940).

(11) F. Kavanagh, "New Photoelectric Fluorometer and Some Applications," *Ind. Eng. Chem., Anal. Ed.* 13, 108 (1941).

(12) L. B. Rogers, Secret Notebook No. CL-1198, Feb. 2, 1946, pp. 115-157.

TABLE 4

Aluminum and Iron Determined Simultaneously with Hematoxylin

Sample—synthetic RaLa Solution

METAL TAKEN (μg)		METAL FOUND (μg)	
Al	Fe	Al	Fe
3.0	2.4	2.7	2.6
3.6	2.9	3.2	3.0

calibrated with rhenium solutions because of the simularity of rhenium and technetium. The results of Roger's work have not been published.

Before any polarographic work was started with technetium a literature search was made for reported polarographic studies of rhenium for the purpose of obtaining some idea of the rhenium potentials and suitable supporting electrolytes. Lingane[13] found that perrhenate is reduced to the quadrivalent state in 2 to 4 *N* HCl or $HClO_4$. In neutral, unbuffered solutions of KCl a double wave is produced. The first wave ($E_{½}$ = -1.41 v vs. S.C.E.) is caused by the reduction of the perrhenate to the rhenide ion, Re^-. The second wave (at -1.7 v vs. S.C.E.) results from the catalytic discharge of hydrogen. Lingane also used a phosphate solution at pH 7 as supporting electrolyte and found that the perrhenate ion produces a catalytic wave at -1.6 v.

Geyer[14] carried out his reduction studies of rhenium in neutral, acid, and alkaline solutions and observed a total of six reduction steps. The supporting electrolytes studied included solutions of KCl, NaCl, LiCl, Na_2SO_4, MnCl, $CaCl_2$, NaOH, and H_2SO_4 in various concentrations. Geyer found that waves obtained in alkaline solutions and strong sulfuric acid (20 *N*) are analytically valuable.

This current study was begun with an experimental survey of the reduction potentials of pertechnetate in various supporting electrolytes. The instrument being employed is the high-sensitivity recording polarograph designed by M. T. Kelley. The electrolysis cell is shown in Fig. 3. The resistance of the salt bridges used was 3000 to 4000 ohms.

The ammonium pertechnetate solution (3.17×10^{-3} moles of NH_4TcO_4 per liter) used in this polarographic study was obtained from G. E. Boyd and J. W. Cobble, Chemistry Division, who prepared it from the pure technetium metal. The pure metal, which was supplied by G. W. Parker of the "hot" laboratory group, Chemistry Division, ORNL, was produced by separation from a "crude" tetraphenylarsonium perchlorate and pertechnetate precipitate dissolved in concentrated sulfuric acid. The technetium was analyzed spectrographically and found to be pure.

Supporting Electrolyte of 4 M $HClO_4$. Because rhenium gives a well-defined wave in 4 *M* $HClO_4$,[15] polarograms were made of technetium in 4 *M* $HClO_4$. The perchloric acid solutions contained 1.59×10^{-4} moles per liter of NH_4TcO_4. The potential range covered by the polarograms was from +0.4 to -1.8 v vs. S.C.E.

In the polarography of a fresh aliquot of this solution a wave is

[13] J. J. Lingane, "Polarographic Investigation of Rhenium Compounds I. Reduction of Perrehnate Ion at the Dropping Mercury Electrode," *J. Am. Chem. Soc.* 64, 1001-1007 (1942).

[14] R. Geyer, "zur polarographischen Reduktion des Rheniums," *Z. anorg. Chem.* 263, 47-62 (1950).

[15] J. J. Lingane, *loc. cit.*

observed which starts at zero potential. However, this wave is not reproducible, and whether this curve is caused by the reduction of pertechnetate has not been determined. It is possible that in acid solution the pertechnetate is reduced by the mercury. This would account for the absence of waves in polarograms of the same solution when it was polarographed after standing in contact with mercury. In order to check this, the solution was removed from the cell and mercury, and kept stoppered overnight. When the solution was again polarographed, a long, drawn-out wave appeared starting at -0.1 v, which may be caused by air reoxidation. Rogers found evidence that this may also be the case in HCl solutions.[16]

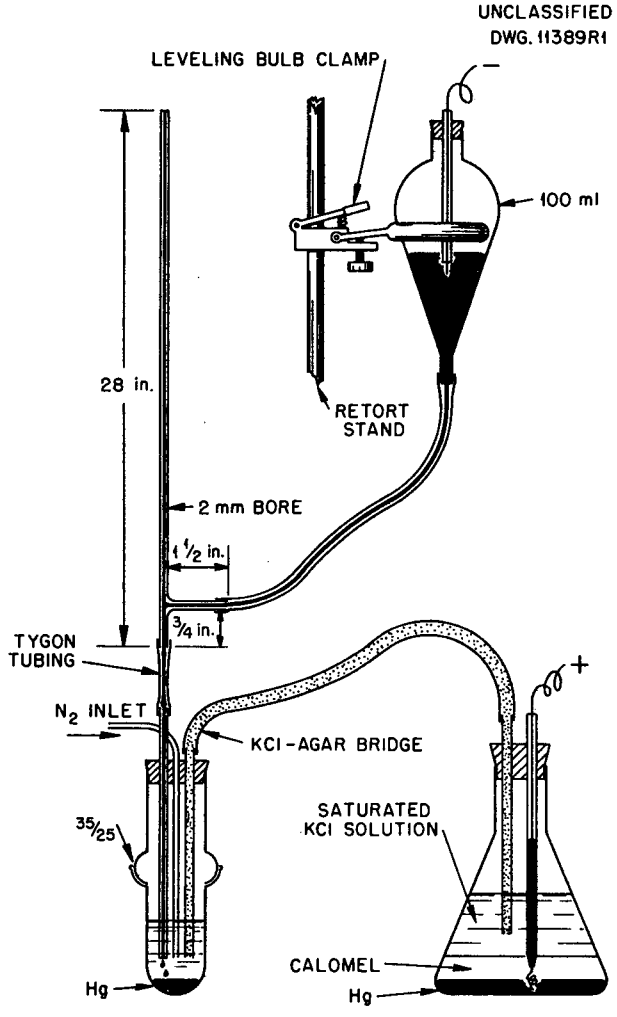

Fig. 3 - Electrolysis Cell Assembly Used in Polarography of Technetium.

No other waves were found in 4 *M* $HClO_4$ in the potential range covered.

Supporting Electrolyte of 0.1 M KCl. A solution of 1.59×10^{-4} *M* NH_4TcO_4 in 0.1 *M* KCl solutions of pH ranging from 3 to 9 was polarographed over the potential range of +0.1 to -1.8 v vs. S.C.E. In solutions of pH ranging from approximately 7 to about 9, two waves were observed. The first wave is well-defined with an $E_{1/2}$ of approximately -0.8 v. The second wave has a very large maxima with an $E_{1/2}$ of approximately -1.2 v. Figure 4 shows the polarogram of ammonium pertechnetate in 0.1 *M* KCl at a pH of 9.3.

When the pH of the solution is approximately 6 or below the first wave becomes ill-defined. The effect of pH on the second wave has not been determined. Figure 5 shows the effect of lowering the pH on the first wave when the supporting electrolyte is 0.1 *M* KCl (pH 5.9).

To determine whether the first wave (pH 9.3) is reversible the usual tests of reversibility of an oxidation-reduction reaction were applied. From the fundamental equation of the polarographic wave[17]

$$E_{d.e.} = E_{1/2} - \frac{0.0591}{n} \log \frac{i}{i_d - i},$$

the reversibility of a reaction may be tested. From this equation it is

[16] L. B. Rogers, *op. cit.*, p. 137.

[17] J. Heyrovsky and D. Ilkovic, "Polarographic Studies with the Dropping Mercury Electrode. II. The Absolute Determination of Reduction and Depolarization Potentials," *Collection Czechoslov. Chem. Commun.* 7, 198-214 (1935).

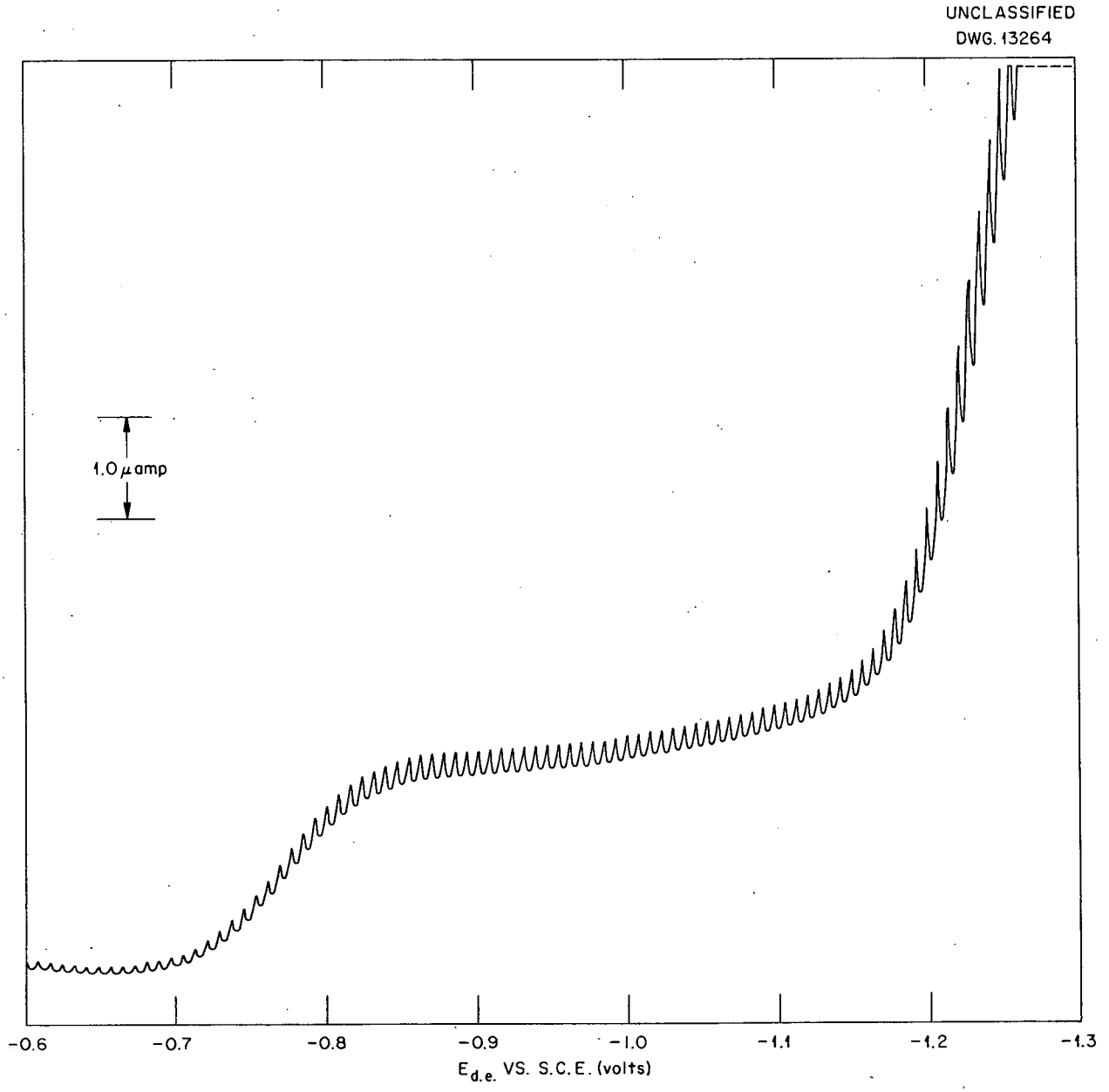

Fig. 4 - Polarogram of a Solution of 1.59 X 10^{-4} *M* NH_4TcO_4 and 0.1 *M* KCl, pH 9.3.

evident that a plot of $E_{d.e.}$ vs. log $i/(i_d - i)$ should produce a straight line with a slope of $0.0591/n$ v. The potential at which the log term becomes zero should be the half-wave potential. That this is the case has been experimentally verified by Kolthoff and Lingane.[18] However, if the slope of the plot does not agree with the theoretical slope the reaction may be irreversible.

[18] I. M. Kolthoff and J. J. Lingane, *Polarography* (New York: Interscience, 1946), p. 145.

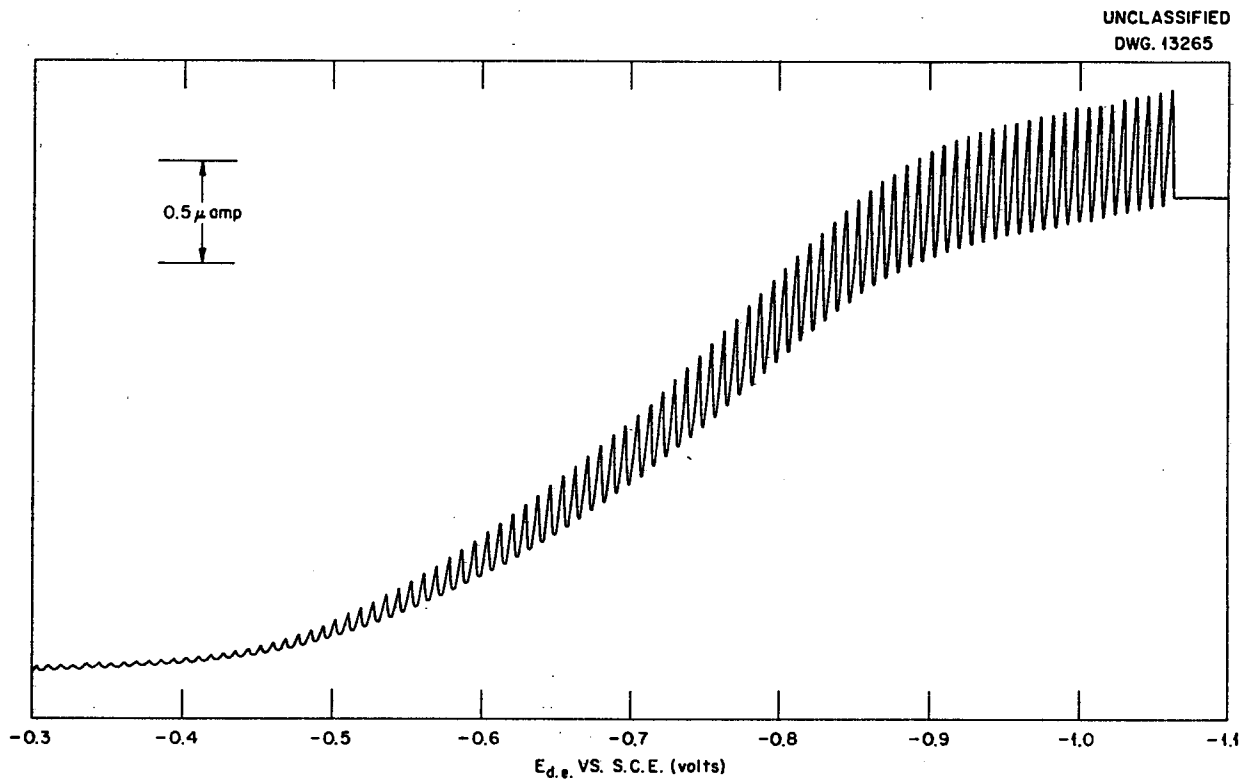

Fig. 5 - Polarogram of a Solution of 1.59 X 10^{-4} *M* NH_4TcO_4 and 0.1 *M* KCl, pH 5.9.

A typical polarogram from the 0.1 *M* KCl medium is shown in Fig. 6. Figure 7 shows such a plot of the data taken from the curve of Fig. 6, and the slope of the curve is 0.073 v. This does not correspond to the theoretical slopes of 0.059, 0.033, or 0.023 v. calculated for one-, two-, or three-electron reductions, respectively. However, from Fig. 7 a value of -0.81 v vs. S.C.E. (log term = 0) is indicated to be the half-wave potential.

Regardless of the reversibility or irreversibility of the reaction, it is important to know *n*, the number of electrons involved in the reaction.

Because *n* cannot be calculated from the plot of log $i/(i_d - i)$ another equation must be used. The Ilkovic equation,[19] given below, is useful in making this calculation:

$$i_d = 605 \cdot n \cdot D^{1/2} \cdot C \cdot m^{2/3}\ t^{1/6}$$

where i_d = the average current in μamp,

n = the number of faradays of electricity required per mole of the electrode reaction (the number of electrons involved in the reduction or oxidation),

D = diffusion coefficient of the reducible or oxidizable substance in $cm^2\ sec^{-1}$,

[19] I. M. Kolthoff and J. J. Lingane, *op. cit.*, p. 55.

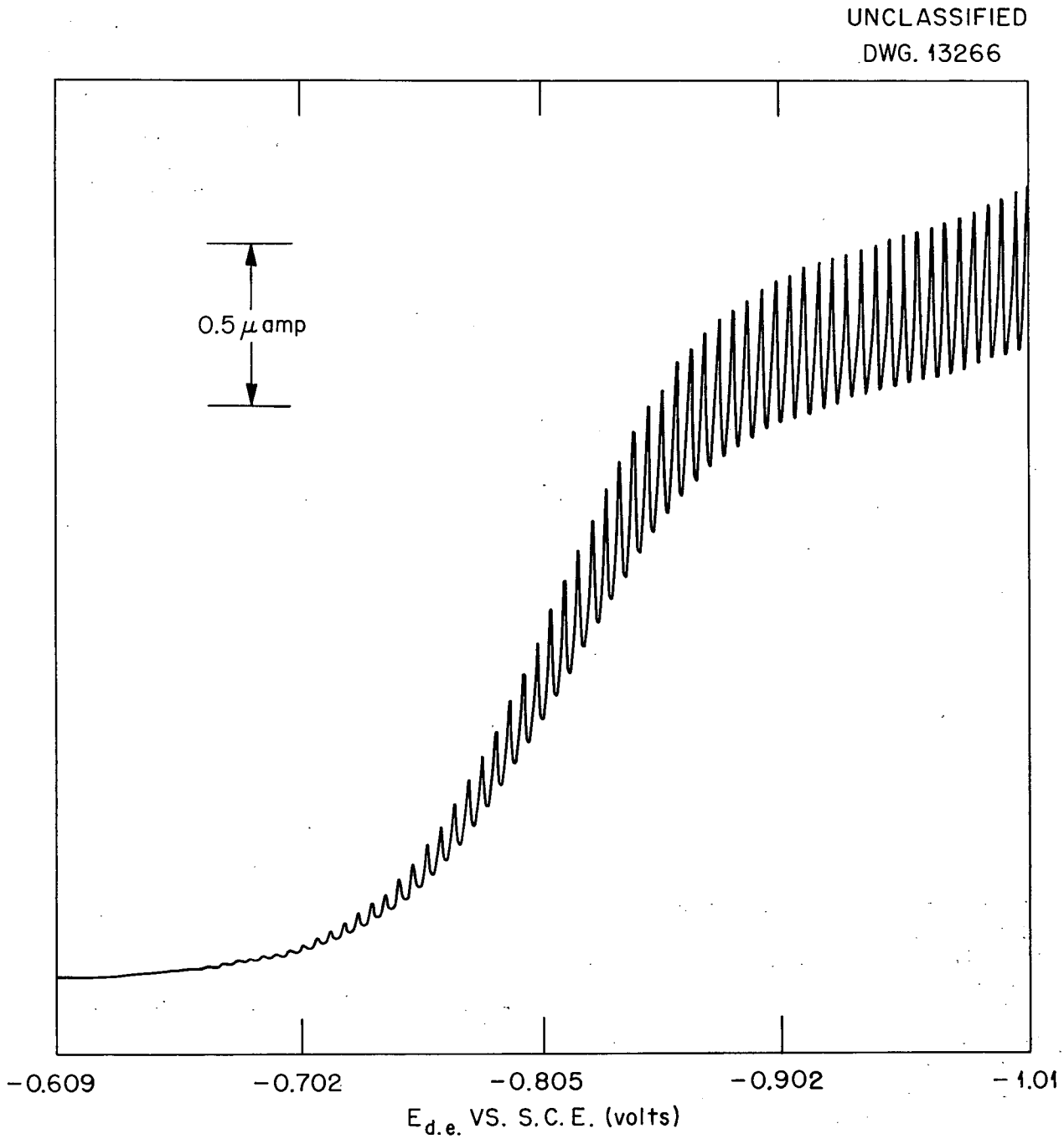

Fig. 6 - Polarogram of a Solution of 1.59 X 10^{-4} *M* NH_4TcO_4 and 0.1 *M* KCl, pH Approximately 7.

C = concentration of oxidizable or reducible specie in millimoles per liter,

m = the rate of flow of mercury from the dropping mercury electrode in mg sec^{-1},

t = mercury drop time in sec.

Because the diffusion coefficient of the pertechnetate ion has not been

measured one must assume its value. Since it seems reasonable to assume that the diffusion coefficients of the perrhenate and pertechnetate ions are similar, the value of the diffusion coefficient of perrhenate ion (1.37×10^{-5} cm^2 sec^{-1})[20] is used in the calculation.

Then by use of the Ilkovic equation and the data from the same curve used to plot Fig. 7

$$i_d = 1.995\ \mu\text{amp},$$

$$D = 1.37 \times 10^{-5}\ \text{cm}^2\ \text{sec}^{-1},$$

$$C = 1.59 \times 10^{-1}\ \text{millimoles/l},$$

$$m^{2/3}\ t^{1/6} = 2.16\ \text{mg}^{2/3}\ \text{sec}^{-1/2},$$

and

$$n = \frac{1.995}{605\ (1.37 \times 10^{-5})^{1/2}\ (1.59 \times 10^{-1})\ (2.16)}$$

$$= 2.58.$$

From this value of n one still may not determine the number of electrons used in the reduction of pertechnetate in 0.1 *M* KCl, and further work is required to establish this.

Supporting Electrolyte of 0.1 M NH_4Cl. A solution of 1.59×10^{-4} *M* NH_4TcO_4 in 0.1 *M* NH_4Cl was adjusted to a pH of 8.3 with NH_4OH. Two waves were found, the first was well-defined and the second had a large maximum even though the solution contained 0.01% gelatin. These two waves probably are the same two waves that appear in the alkaline 0.1 *M* KCl solutions. They are shown in Figs. 8 and 9.

When more gelatin was added to the solution (to make 0.03%), the limiting current appeared to be stabilized at the top of the maximum (Fig. 10), rather than the maximum decreasing.

Effect of Mercury on Reduction of Pertechnetate. Because it was suspected that pertechnetate was reduced by mercury on standing, a series of polarograms were run to check this.

Polarograms were run after various time intervals on a solution of 1.59×10^{-4} *M* NH_4TcO_4 in 0.1 *M* KCl in contact with mercury. The limiting current of each run was determined and the results are shown in Table 5. All

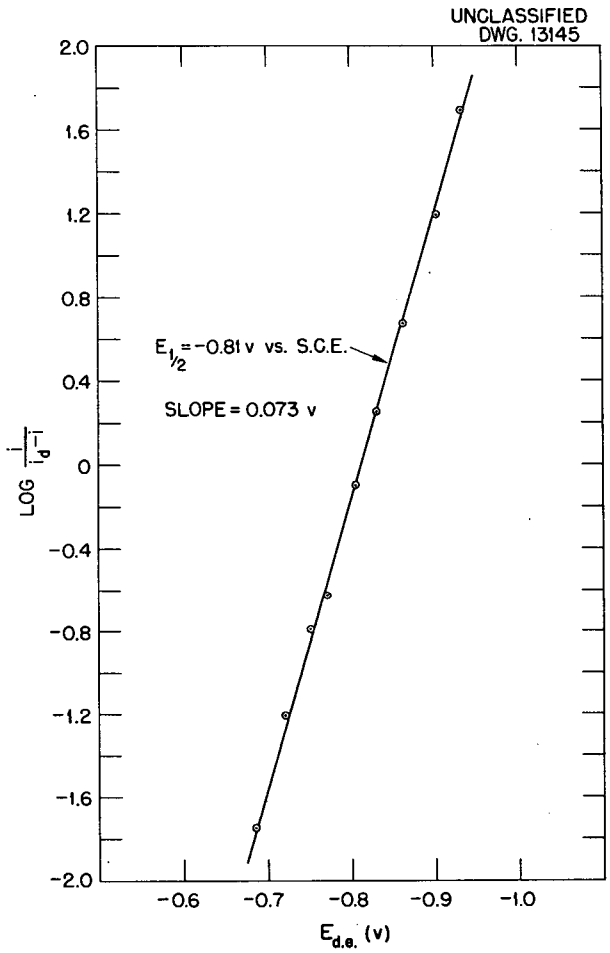

Fig. 7 - Test of the Equation of the Wave (Fig. 6) of 1.59×10^{-4} *M* NH_4TcO_4 in 0.1 *M* KCl.

[20] J. J. Lingane, *loc. cit.*

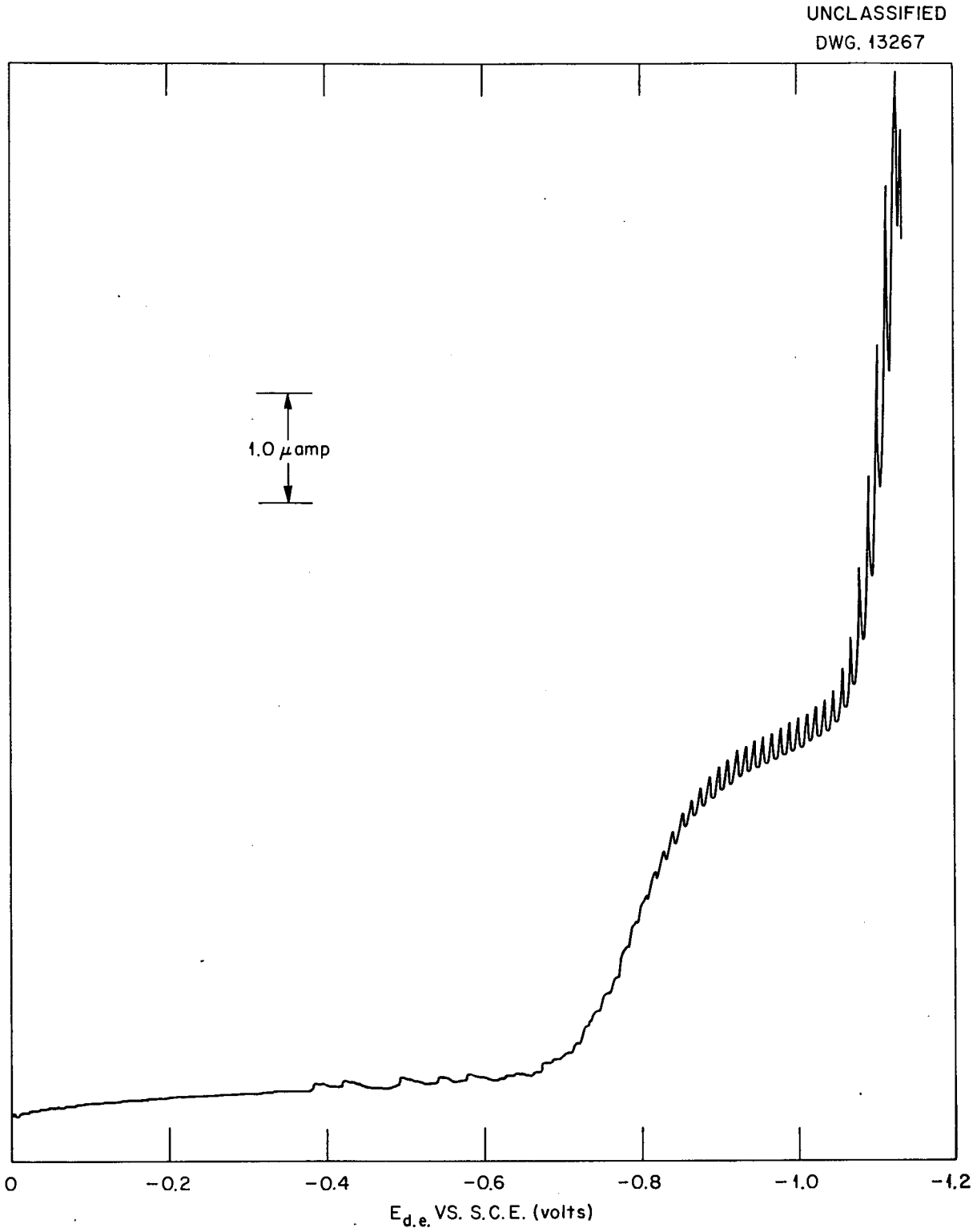

Fig. 8 - Polarogram of a Solution of 1.59 X 10^{-4} *M* NH_4TcO_4, 0.1 *M* NH_4Cl and 0.01% Gelatin, pH 8.5, Potential Range of 0.0 to -1.2 Volts.

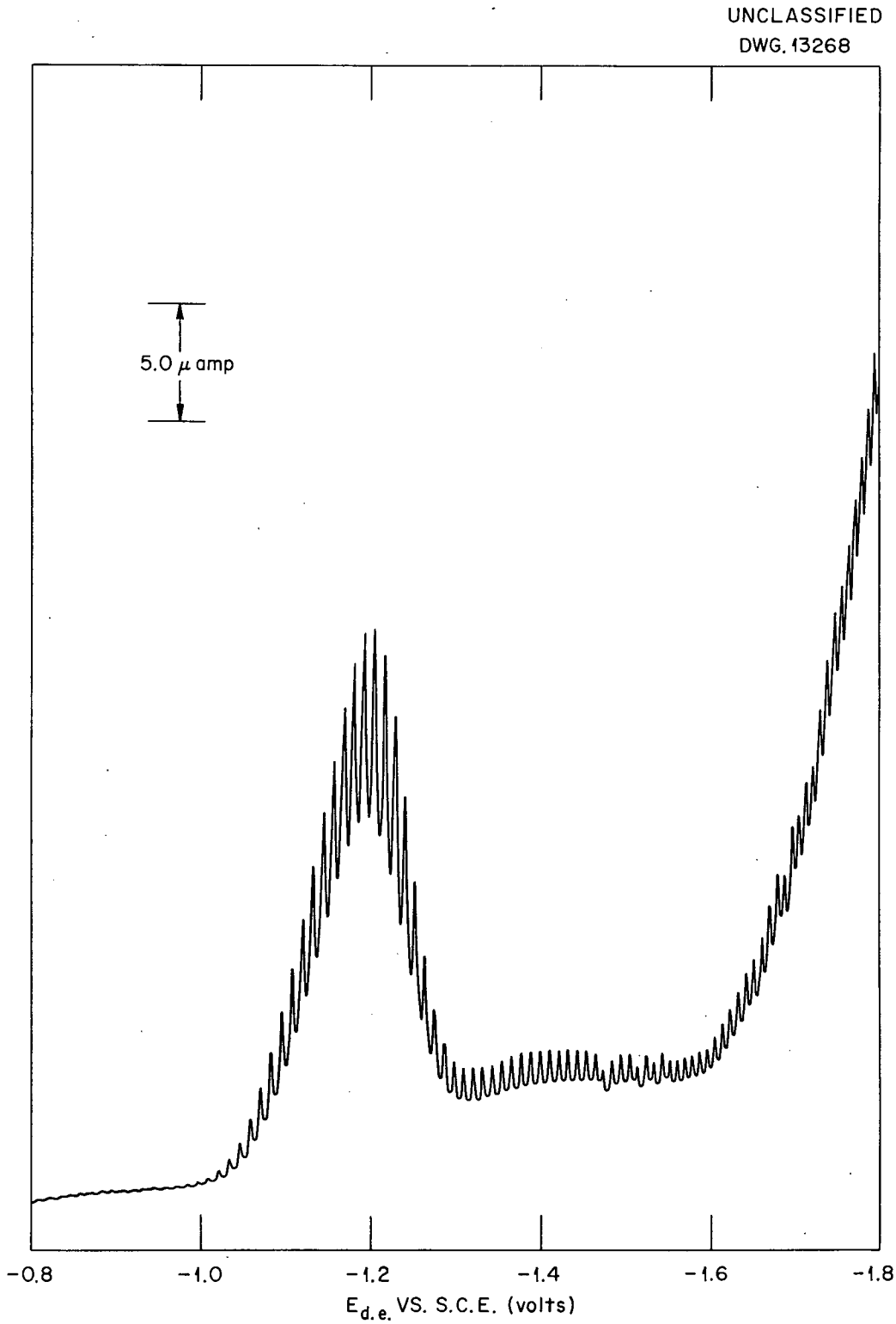

Fig. 9 - Polarogram of a Solution of 1.59 X 10^{-4} *M* NH_4TcO_4, 0.1 *M* NH_4Cl and 0.01% Gelatin, pH 8.5, Potential Range of -0.8 to -1.8 Volts.

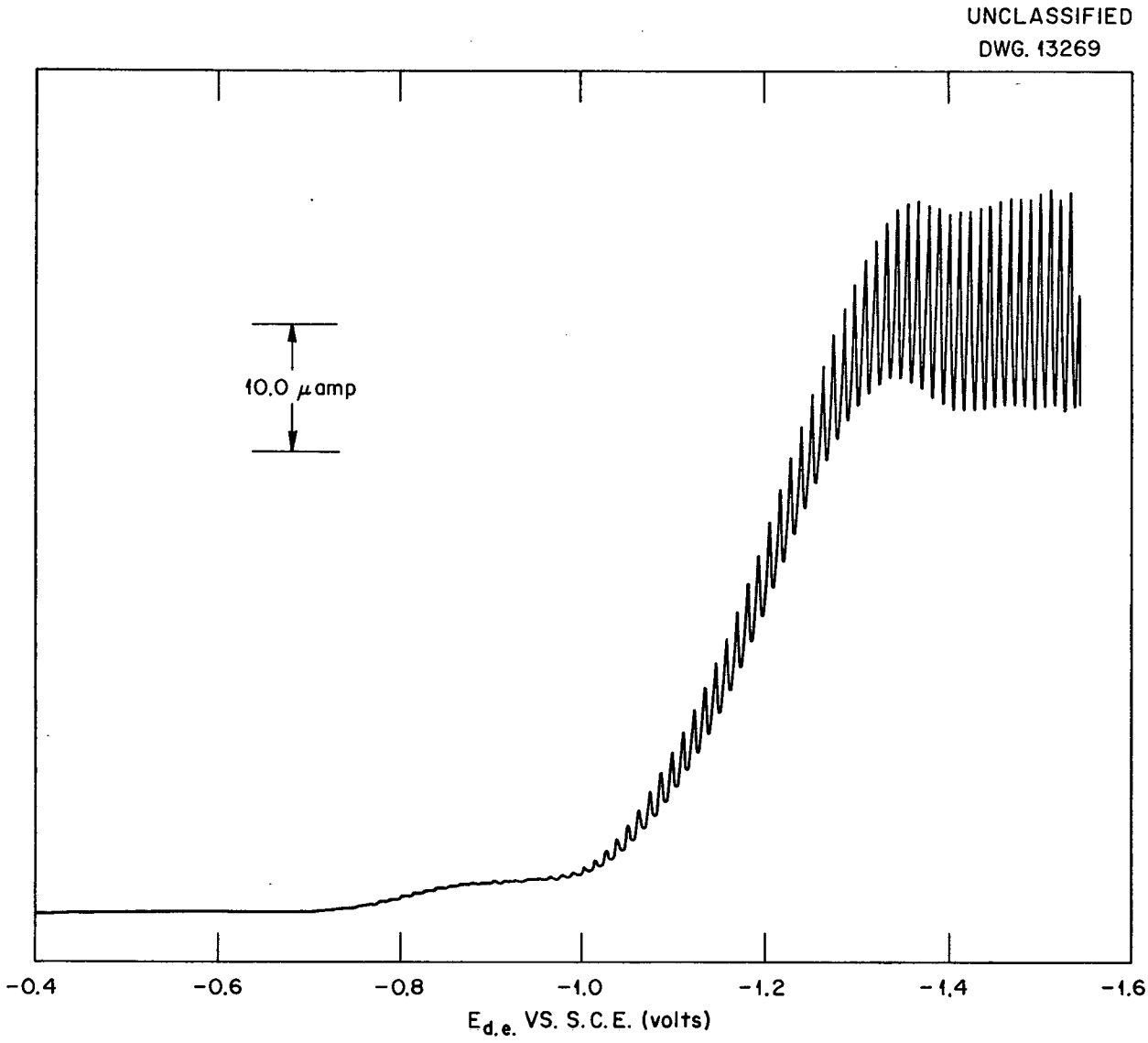

Fig. 10 - Polarogram of a Solution of 1.59 X 10^{-4} *M* NH_4TcO_4, 0.1 *M* NH_4Cl and Approximately 0.03% Gelatin, pH 7.3.

other conditions such as temperature, cell resistance, and capillary characteristics were constant.

With the exception of Curve 4, the diffusion current appears to be constant. The slight increase shown in Curve 7 is probably the result of evaporation over the week end. These data indicate that mercury does not reduce pertechnetate in a neutral solution of 0.1 *M* KCl.

Future work will include the determination of the half-wave potential of the pertechnetate ion in other supporting electrolytes. Also, the values of *n* in the different reduction reactions of pertechnetate in various media will be studied.

TABLE 5

Effect of Mercury on Reduction of Pertechnetate

(1.59×10^{-4} *M* NH_4TcO_4 in 0.1 *M* KC)

CURVE NO.	TIME (min)	DIFFUSION CURRENT (μamp)
1	0	1.60
2	7	1.60
3	13	1.62
4	49	1.01
5	118	1.64
6	148	1.67
7	Over week end	1.71

Total Sulfur in Ion-Exchange Resin (J. M. Chilton). A request was received from B. Soldano of the Chemistry Division for the determination of total sulfur content of certain ion-exchange resin samples that contained approximately 10% sulfur.

Various oxidation methods were tried in order to bring the samples into solution without any loss of sulfur. An open-cup fusion with sodium peroxide dissolved the samples successfully, but the results of the subsequent analysis for sulfur indicated that some had been lost in the process. Closed-bomb fusions with peroxide were tried, using both micro and macro Parr bombs. With the micro bomb it was not possible to secure a complete oxidation. With the macro bomb complete combustion of a 0.2-g sample was obtained by use of 0.1 g benzoic acid, 0.3 g $KClO_4$, and 3.0 g Na_2O_2. The sulfur analysis on the sample from this fusion agreed with that obtained from a wet oxidation. An attempt was made to oxidize a sample by use of nitric acid and potassium chlorate. This method gave low sulfur results.

The following method was finally evolved, which gave good precision for the sulfur determination: Weigh sample (0.5 to 0.7 g) into 600-ml beaker. Add 25 ml H_2O and 15 ml $HClO_4$. Boil to fumes of $HClO_4$. Add 25 ml H_2O. If solution is not colorless at this point, add more $HClO_4$, and take to fumes a second time. Add 100 ml H_2O and 10 ml saturated bromine water. Boil to expel bromine. Dilute to 500 ml, and neutralize with dilute NH_4OH to methyl red. Add 5 ml concentrated HCl. Bring to boil. Precipitate sulfur as $BaSO_4$ by usual technique.

Several samples of resins were analyzed by this method. The results are reported in Table 6.

TABLE 6

Sulfur in Ion-Exchange Resin

SAMPLE	SULFUR (%)
1	11.21
	11.07
	11.23
2*	11.29
3	9.75
	9.68
4	6.32
	6.33

*Estimated to have same sulfur content as Sample 1.

Spectrophotometric Determination of Molybdenum in Spectrographic Standards (J. M. Chilton). A request was received from the Spectrographic Laboratory to check the concentration of a standard solution of molybdenum. The colorimetric method given by Snell and Snell[21] was investigated.

[21] F. D. Snell and C. T. Snell, *Colorimetric Methods of Analysis* (3rd ed.; New York: Van Nostrand, 1948), II, p. 482.

Two standard solutions were prepared, one from pure molybdenum metal which was dissolved in fuming H_2SO_4, and one from reagent grade $Na_2MoO_4 \cdot 2H_2O$. No difference was noticed in the results obtained with the two solutions. The procedure was followed exactly as given, using a Beckman Model B spectrophotometer at a wave length of 460 mμ. The results so obtained were erratic. After the procedure was modified by using 25 ml of 1:1 H_2SO_4 instead of the recommended 70 ml, excellent checks were obtained. Two samples from the Spectrographic Laboratory were then analyzed and excellent precision was obtained as shown by the data of Table 7.

TABLE 7

Molybdenum in Spectrographic Standard Solutions

SAMPLE	VOLUME ANALYZED (ml)	MOLYBDENUM FOUND	
		%	mg/ml
1	0.05	1.02	
	0.06	1.00	
2	3.0		0.0931
	4.0		0.0891
	5.0		0.0904

Vacuum-Fusion Analysis of Metals (W. J. Wolkowitz). The vacuum-fusion apparatus, constructed principally as an analytical tool for the Metallurgy Division, has been altered in some important respects. The original equipment was designed to provide data on trace amounts of oxygen, hydrogen, and nitrogen in such metals as zirconium, uranium, thorium, molybdenum, etc., and has been in operation since September 1950.

Vacuum-fusion analysis is accomplished by a low-pressure reduction in a graphite crucible inductively heated. The advantage of using high vacuum is that it shifts the equilibrium reaction,

$$MeO + C \rightleftharpoons Me + CO ,$$

to the right.

Because of the tendency for the CO to react with the metallic vapor present, high-speed pumping is essential to successful operation. The high-vacuum part of the system has been redesigned to give the optimum pumping speed (Fig. 11). After this change had been made, Bureau of Standards Cooperative Study Steel No. 2 was analyzed. The result, 0.018% oxygen by weight, checks well with the Bureau of Standards "best" value of 0.017%. Added capacity for storing gases during the reduction has been provided by sealing a 2-liter bulb into the analysis system on a stand-by basis.

During the last quarter there were many requests for hydrogen analyses on finely divided metal powders. The metals in question included molybdenum, chromium, manganese, and thorium. The technique in each case is to enclose a suitable weight of the metal powder in a gold capsule made of 2-mil foil. A cap is made by rolling a narrow strip of gold into a spiral and inserting this into the capsule with a spring fit. This enables the metal powder to be held in the sample magazine for degassing operations, and prevents the loss of sample when the capsule is dropped into the heated graphite crucible. A suitable metal bath is used to receive the sample. It is necessary to determine a blank for the gold capsule. A better technique would be to convert the powder, using a pelletizer, into a metal wafer 0.5 in. in diameter. This

would give a convenient massive piece and eliminate the necessity of adding a foreign material.

Two samples of stainless steel were analyzed for hydrogen. One was etched in concentrated $FeCl_3$—HCl at room temperature and pretreated 24 hr at 250°C in 1% HNO_3. The other was etched in 10% HNO_3 at 60°C and pretreated 24 hr at 250°C in 1% HNO_3. Both samples analyzed 0.0002% hydrogen.

The determination of oxygen and nitrogen in thorium is an important one, since the result indicates whether or not the melting, alloying, and annealing of the metal is being done without oxide or nitride formation. It has been found that thorium metal can be analyzed satisfactorily for oxygen by using enough tin in the bath so that the tin-to-thorium ratio is 60 to 40. A temperature of 1720°C is used, and the graphite crucible is changed for each determination.

Positive-Feed Micro Buret (F. J. Miller). A paper describing the construction, operation and applications of the positive-feed micro buret, which is in use in the Ionic Analyses Laboratory, is being prepared

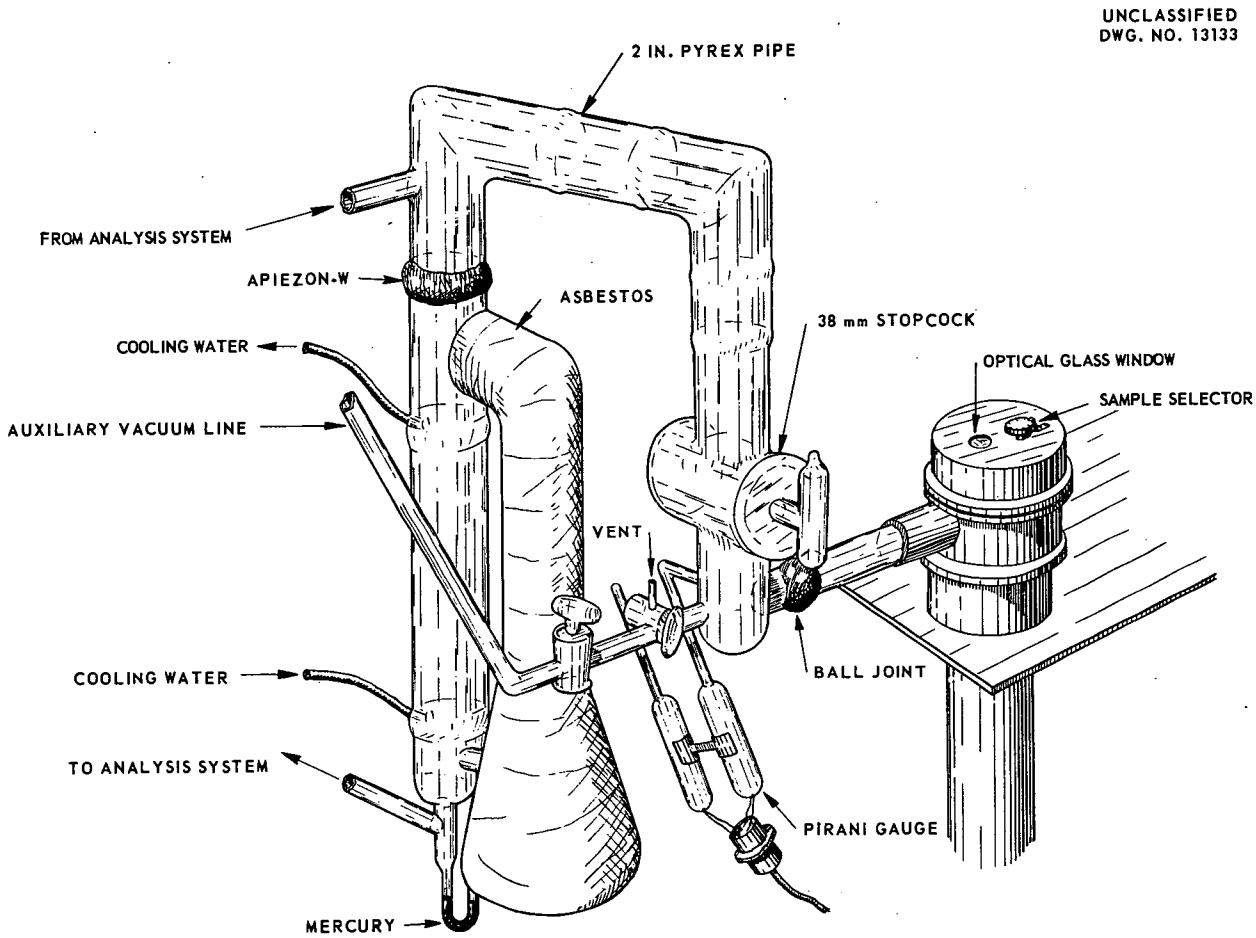

Fig. 11 - High-Vacuum End of Vacuum-Fusion System.

for presentation at the Wilson Dam meeting of the American Chemical Society.

RADIOCHEMICAL ANALYSES

S. A. Reynolds

Nuclear Properties

Thermal Neutron Cross Section for the Production of Radioactive Copper-64 (W. S. Lyon, R. H. Lewis). Radioactive copper-64 ($T_{½}$ = 12.8 hr) is an important isotope prepared at and shipped from ORNL. Uncertainty exists, however, as to the actual value of the cross section for production of copper-64. Seren *et al.*,[22] have given the atomic cross section as 2.0 barns (±20%). Pomerance,[23] using separated copper-63 reports a value of 4.3 barns for this isotopic cross section. This corresponds to a value of 2.97 barns for the atomic cross section.

The decay of copper-64 involves β^-, β^+ radiation and K electron capture. In addition a small amount of gamma radiation is present. The β^-/β^+ ratio is believed to be 2.1; the K/β^+ ratio is, however, uncertain.[24] By use of facilities in these laboratories it should be possible to arrive at a value for the absolute disintegration rate of a sample of copper-64 without knowledge of the exact branching ratios. The total amount of $\beta^- + \beta^+$ radiation may be assayed by absolute beta counting on a helium-filled Geiger-Mueller counter. Such a counter has an extremely low efficiency for X-rays. The total amount of K-capture (Ni X-ray) activity may be assayed by beryllium absorption data obtained using a krypton-methane counter as a detector. A curve relating X-ray energy to counter efficiency has been made for such a counter using K-capture elements of known decay scheme within the region of copper-64. Here samples of zinc-65, manganese-54, and chromium-51 were counted on the krypton counter. The disintegration rates were then obtained by coincidence counting. The counter efficiency was calculated as E = cpm/dpm. The total of the β^+, β^-, and K-capture activities should be the absolute disintegration rate of a copper-64 source.

Five mg of pure copper metal was irradiated in the ORNL graphite reactor together with pure cobalt metal powder as a monitor. Three runs were made of 62-, 16-, and 16-hr duration. Upon removal from the reactor the copper was dissolved in HNO_3, the solution made to a known volume, and suitable aliquots were taken for counting. In addition aliquots were followed for decay on the gamma ionization chamber and the Geiger-Mueller counter. These decay data indicated copper-64 to be the only activity present. Weighed amounts of the cobalt monitor were read on the calibrated ion chamber, and the absolute amount of cobalt-60 produced was calculated. The thermal neutron flux was then obtained as follows:

$$f = \frac{A}{N\sigma(1 - e^{-\lambda t})}$$

where σ was 34 barns.

The amount of copper used in each experiment was determined colorimetrically. Total copper-64 activity was obtained as described above. The

---

[22] L. Seren, N. Friedlander, and H. Turkel, "Thermal Neutron Activation Cross Sections," *Phys. Rev.* 72, 888 (1947).

[23] H. Pomerance, "Pile Oscillator," *Physics Division Progress Report for Quarter June, July, August 1948*, ORNL-159, p. 22.

[24] "Nuclear Data," *Natioanl Bureau Standards Circular 499*, September 1, 1950.

cross section was then calculated from the equation:

$$\sigma = \frac{A}{FN(1 - e^{-\lambda t})}$$

The values for the atomic cross section for production of copper-64 from thermal neutron bombardment of copper were 2.57, 2.80, and 2.80 barns. From these data the average cross section is 2.72 barns with an uncertainty of about 10%.

Decay Scheme of Ce^{144}-Pr^{144} (W. S. Lyon). Work is now in progress in collaboration with A. R. Brosi, B. H. Ketelle, and H. Zeldes (Chemistry Division) on the decay scheme of Ce^{144}-Pr^{144}. Final results will be published in a Chemistry Division report.

Measurement of Radioactivity

Efficiencies of Scintillation Gamma Counters (W. S. Lyon). Under direction of C. J. Borkowski of the Chemistry Division two crystal scintillation counters have been designed and built by the ORNL Instrument Division. These instruments employ sodium iodide crystals with cavities approximately 1 cm in diameter and approximately 5 cm deep. Two-ml glass-stoppered volumetric flasks are used as sample holders, and are lowered into the crystal hole for gamma counting. The assembly is similar to that described by Anger.[25] A complete description of the equipment will be published later by Borkowski. NaI crystal counters are quite efficient for gamma-ray counting. Unlike the high-pressure ion chamber, scintillation counters are more efficient for low-energy than high-energy gamma rays. These counters are stable and may be used to count samples with as little as several hundred counts per minute or as much as several million. With gamma energies above several hundred kilovolts, an increase in the volume of the sample does not result in a reduction of the counting rate. Weak gamma rays are absorbed, however, to an extent which will cause lowered observed rates. McBride[26] has found that for hard gamma rays no change in counting rate is observed up to approximately 2.5-cm sample height. This corresponds to a volume of about 1 ml. Above this volume, however, one begins to get out of the most sensitive region of the crystal, and the rate decreases with increase in volume. At 2 ml the rate is approximately 10% lower than maximum. The counting efficiencies of these two counters have been determined for each of seven nuclides.

Samples of 2-ml volume were used in 2-ml glass volumetric flasks, since it was felt that the 2-ml volume was easily reproducible and thus most useful. Solutions of the seven different nuclides were first counted on the scintillation counter. Suitable aliquots were then coincidence counted to obtain the true disintegration rate. The counting efficiency was then calculated from the equation E = cpm/dpm. The results of these experiments are given in Table 8.

It is apparent that use of the scintillation counter is a far more sensitive method than standard second-shelf beta counting. Efficiencies using gamma counting are in the order of 30 to 60%; using beta counting, about 8%. The counter has great possibilities for use where gamma rays are to be counted.

[25] H. O. Anger, *Scintillation Counters for the Measurement of Radioactive Samples*, UCRL-886 Rev. (February 1951).

[26] J. P. McBride, private communication, September 1951.

TABLE 8

Efficiencies of Scintillation Counters for Counting Gamma Rays

NUCLIDE	GAMMA ENERGY (Mev)	COUNTER EFFICIENCY (cpm/dpm)	
		COUNTER NO. X-45050 P.H.* = 13, 1250 VOLTS	COUNTER NO. X-45066 P.H.* = 6, 1300 VOLTS
Ce^{141}	0.13	0.60	0.59
Au^{198}	0.41	0.34	0.29
Zr^{95}	0.73	0.30	0.23
Nb^{95}	0.76	0.30	0.22
Sc^{46}	0.89 1.12	0.44	0.33
Co^{60}	1.17 1.33	0.43	0.31
Na^{24}	1.38 2.76	0.39	0.28

*P.H. — pulse height.

It is also apparent that for nuclides such as cobalt-60 (gamma rays of 1.17 and 1.33 Mev), the observed efficiency is less than the sum of the individual efficiencies for the gamma rays. This is because the scintillation counter is a pulse-counting device, and since the two gamma rays are emitted simultaneously, when the counter records one gamma ray the second is not counted. Were the counter 100% responsive, the efficiency would be that of the first gamma ray emitted. Since the geometry is not 100%, the counter may miss the first gamma ray but record the second, and vice versa. (An ion chamber measures current produced, and the efficiency observed is equal to the sum of the individual efficiencies.)

It is believed that scintillation counting may soon replace beta counting for many analytical applications.

Purex Process Decontamination Factors Using Scintillation Counting (W. S. Lyon). In cooperation with J. Ullman of the Chemical Technology Division, experiments have been made to determine decontamination factors of Purex solutions using scintillation counting. The tests used aliquots of first- and second-cycle uranium and plutonium products. After the decontamination factors were obtained from ionization chamber readings in the usual way, aliquots of the solutions were evaporated to dryness on watch glasses. These sources were then counted on an anthracene crystal counter at a position equivalent to 2% efficiency for cobalt-60 gamma counting. The crystal was covered with about 700 mg/cm^2 of aluminum to absorb the beta particles. These conditions were employed in order to approximate a similar setup used at KAPL. The data indicated that decontamination factors obtained with

the ionization chamber and with the crystal were substantially the same.

Additional experiments were run using Purex 1-EU product. Here evaporated aliquots as well as liquid samples of product solutions were compared with natural uranium for gamma activity. Solid samples were counted at 2% cobalt efficiency on the anthracene crystal. Liquid samples were measured in the high-pressure ionization chamber and on the crystal scintillation counter designed by C. J. Borkowski. This counter is described elsewhere in this report. The natural uranium used was K-25 material.

The 1-EU product uranium gave a gamma-counting rate lower than that of natural uranium when counts were obtained on both crystal counters. The 1-EU product uranium gave a higher gamma-counting rate than natural uranium when measured on the ion chamber. These data may be reconciled when one considers the efficiencies of the two types of instruments. The crystal counters are quite efficient (NaI approximately 60%) for low-energy gamma rays. The ionization chamber has very low efficiency for low-energy gamma rays. In the natural uranium source the UX_1 daughter is in equilibrium with the uranium and hence a large amount of 90-kev gamma rays are found. With ion chamber measurements the effect of low-energy gammas is minimized. The fission-product contamination is then quite apparent from ionization chamber readings, but it appears lower when the scintillation counter is used.

Attempts have also been made to identify uranium-237 in 1-EU product by absorption methods. Data are inconclusive. Ullman[27] believes he has evidence for the presence of uranium-237 in Purex 1-EU product. His data were obtained through decay measurements.

Low-level Beta Measurements (W. A. Brooksbank, S. A. Reynolds). In March of this year, the Analytical Chemistry Division was given the problem of developing methods for radiochemical analysis of low-level liquid waste solutions. The results of the preliminary investigation were reported at Mound Laboratory in June.[28]

The work reported was done at activity levels of 10^{-5} and 10^{-3} μc/ml. Because of the low activity level, most of the work was performed at Y-12 where a lower background prevailed. There are no adequate facilities at ORNL for low-level service analyses or research. The AEC has set 10^{-7} μc/cc as the maximum permissible amount of radioactivity in liquids to be discharged into the environment. Because of background variations great difficulty was experienced, even at Y-12, in working with samples at 10^{-5} μc/cc levels. The problem of low-level liquid waste analysis cannot be solved until adequate facilities are available.

K. Z. Morgan, Health-Physics Division, and F. L. Steahly, Chemical Technology Division, have recommended that a special low-level laboratory be built to enable their divisions to obtain necessary data. The minimum dimensions for such a laboratory would be 30 by 50 ft. It should be equipped with an air purification system (filters, precipitators, and humidifiers) to remove all possible contamination from the air. The counting equipment provided should be

[27] J. Ullman, private communication, September 1951.

[28] W. A. Brooksbank and S. A. Reynolds, "Assay of Low-Level Beta Activity in Liquid Wastes," *Analytical Chemistry Division Quarterly Progress Report for Period Ending June 26, 1951*, ORNL-1113, p. 26.

as nearly fully automatic as is possible to minimize human error in making long counts. The counting room should be well-shielded to reduce background and pickup of electrical disturbances. Also, the laboratory should be equipped with all the apparatus necessary to a good analytical laboratory for work on a micro as well as a macro scale. A spectrophotometer would be essential for potassium determination on plant tissues, in order to measure the counting error caused by potassium-40. A fluorophotometer would be necessary for uranium determinations, and a dark room should be provided for radioautography and nuclear emulsion techniques.

In the analysis of low-activity liquid wastes it becomes necessary to concentrate the solutions in order to increase the count. Two methods are presently in use at various sites. The most common is to evaporate a large volume of the liquid in a beaker and to transfer the concentrate to the counting plate for final evaporation to dryness. During evaporation in the beaker, the "plating-out" of activity is a common phenomenon. This "plating-out" is often irreversible and the activity is lost.

A. H. Emmons of the Health-Physics Division, ORNL, used a multiple aliquot method. This eliminated the loss of activity on the sides of the container. For a 1-liter sample, for example, he would evaporate 1000 aliquots of 1 ml each, all on the same dish. The method, however, was time-consuming.

A device, shown in Fig. 12, has been built which will evaporate 1 liter on a 1-in. stainless steel dish with no loss of activity, and with a minimum of operation time. A round-bottom flask is used as the sample reservoir. The sample flows from the bottom, through a solenoid valve and a capillary tip, into the stainless steel dish. A platinum electrode, filed to a fine point, acts as a level indicator and actuates a relay (Fig. 13), which controls the solenoid valve. This indicator system is very sensitive, regulating the valve when the volume changes by 4 to 5 drops.

The dish is heated by a ring heater designed and used by B. F. Rider, KAPL. Temperature is maintained at 95°C, without an air jet, or 125°C if an air jet is used to stir the solution in the dish.

Preliminary runs with tap water indicate that a 1-liter sample, can be evaporated in 48 hr. There is no

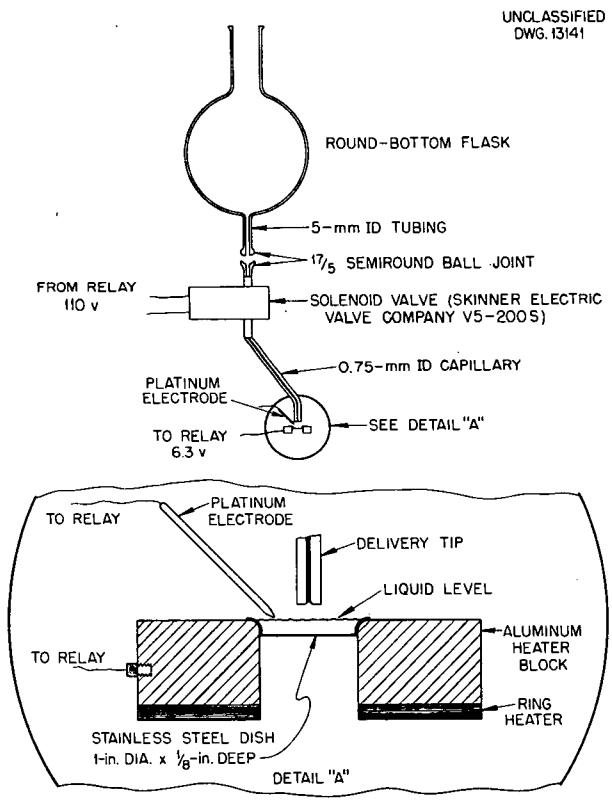

Fig. 12 - Automatic Evaporator.

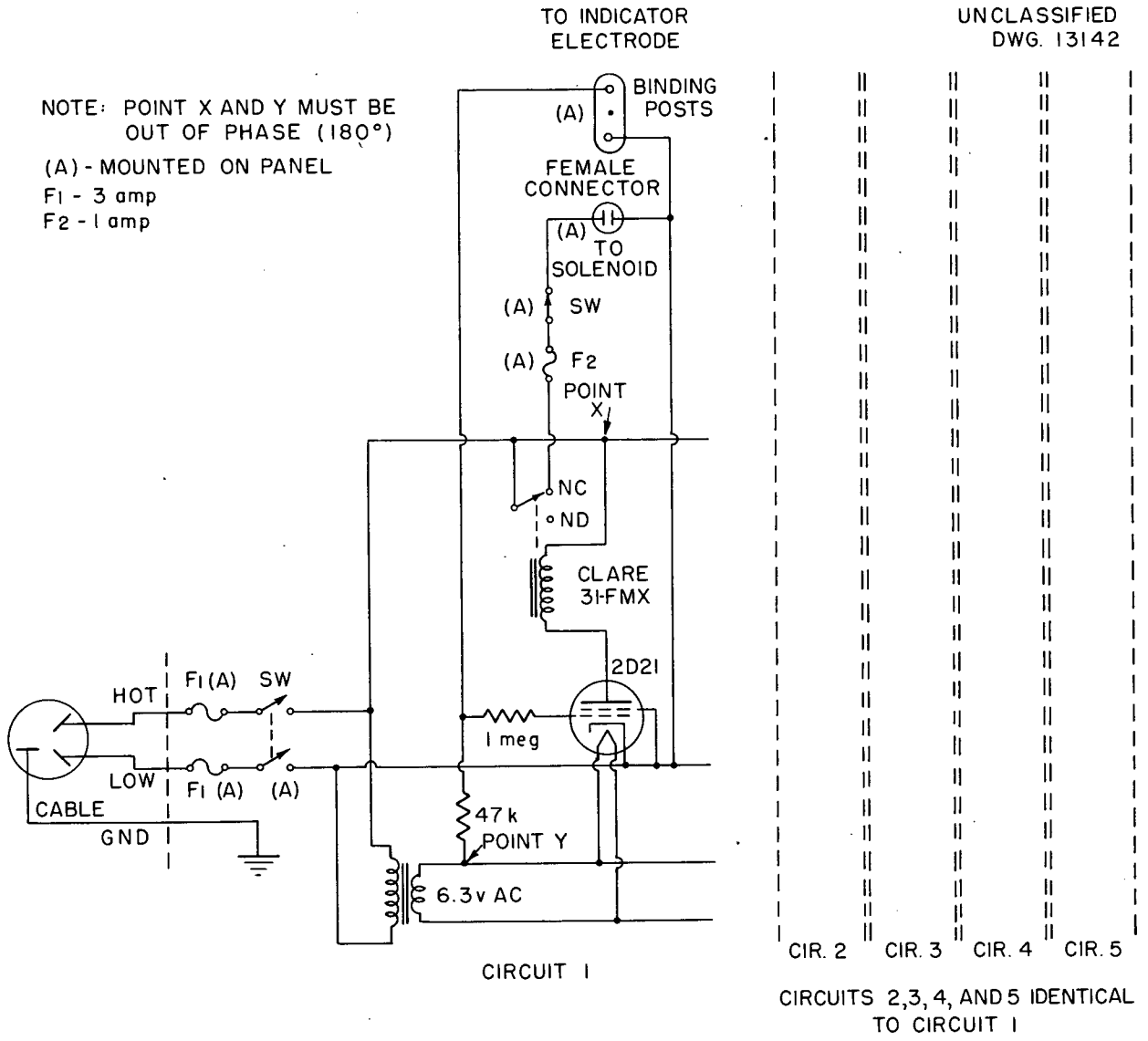

Fig. 13 - Multiple Relay for Automatic Evaporator.

evidence of spattering during evaporation and the solid deposit is reproducible in form. A solution conductivity equal to or greater than that of tap water is necessary for successful operation of the apparatus.

Further evaluations of types of heating, and the effect of stirring, temperature, and conductivity of solutions are planned. The reproducibility of activity measurements at 10^{-7} $\mu c/cc$ is also to be checked.

This device may be used in determining the total solids on solutions low in solids. It requires less than 5 min, exclusive of time for weighing the dish, of an operator's time to start and conclude a determination.

Use of this automatic evaporator will become the standard method for

evaporation-concentration of low-level activity samples on all further research in this group.

Analysis of Radioisotopes

Ce^{141}-Ce^{144} Mixtures (W. S. Lyon, R. R. Rickard,* E. I. Wyatt*). Determination of 32-d Ce^{141} in the presence of 275-d Ce^{144}-Pr^{144} is difficult to make from absorption data because of the complexity of the radiation mixture. An empirical method has been devised, however, which will enable the determination to be made from the ratio of gross beta activity to the praseodymium-144 activity.

Equilibrium mixtures of cerium-144 and its daughter, praseodymium-144, may easily be assayed by extrapolation of the 3.07-Mev beta component from the praseodymium-144. Conversion electrons from the 0.135-Mev gamma ray in cerium-144 and the low (0.35-Mev) energy of the cerium-144 beta particles make the shape of the low-absorber region uncertain. Hence the extrapolation to zero absorber is difficult. Small amounts of cerium-141, which has a 0.58-Mev and a 0.44-Mev beta and a converted 0.145-Mev gamma ray,[29] if added to this mixture make an unresolvable absorption curve.

It was felt, however, that if a known amount of pure cerium-141 could be added to a known amount of pure cerium-144, ratios between the gross activity and the easily determined praseodymium-144 activity could be obtained. These ratios could then be used to determine the amount of cerium-144 present.

Several hundred mg of $Ce(NO_3)_3$ was irradiated in the ORNL graphite reactor for four months. Upon removal and two-week cooling to assure decay of all the 33-hr Ce^{143}, 100 mg of the irradiated $Ce(NO_3)_3$ was purified by the standard cerium radiochemical procedure.[30] This method decontaminates the cerium from protactinium which has in the past led other investigators to report erroneous decay schemes for cerium-141. After purification the cerium oxalate was dissolved in dilute HNO_3, made to volume, and aliquots taken for coincidence counting. The decay scheme of cerium-141 given by Freedman and Engelkemeir is: 67% 0.442-Mev β^- followed by 0.145-Mev γ, 23% converted; 33% 0.581-Mev β^-.

Aluminum absorption data using coincidence counting were obtained, with no data being accepted that were taken with less than 18 mg/cm^2 of absorber before the beta window. This precaution was necessary because of the presence of conversion electrons. Data obtained on the beta-detecting side were corrected for the amount of 0.581-Mev beta that should be counted in the beta side but which is not in coincidence with the gamma ray. This corrected beta counting rate divided by 0.67, the fraction of the decay accompanied by gamma emission, was used to calculate the absolute disintegration rate of the cerium-141 solution. By use of uncorrected beta counting rates, the disintegration rate of cerium-141 was also calculated for each aluminum absorber. These values when plotted against the aluminum absorber and extrapolated to zero aluminum absorber gave a dpm rate of cerium-141 within 3% of that calculated. These data thus support the decay scheme of Freedman and Engelkemeir.

*Radioisotope Analysis Group.

[29] M. S. Freedman and D. W. Engelkemeir, "The Radiations of Cerium-141 and Protactinium-233," *Phys. Rev.* 79, 897 (1950).

[30] D. N. Hume, N. E. Ballou, and L. E. Glendenin, "Cerium," *A Manual of the Radiochemical Determination of Fission Product Activities*, (June 30, 1945), p. 52.

The activity of an old Ce^{144}-Pr^{144} solution was determined in the usual manner (i.e., extrapolation of praseodymium-144 daughter from aluminum absorption data). This solution together with the cerium-141 previously described was used to prepare sources containing the following percentages of cerium-141: 9, 21, 47, and 73.

Sources so prepared were mounted on polystyrene, dried, and aluminum absorption data obtained on the Geiger-Mueller counter. The amount of praseodymium-144 (and hence cerium-144) was determined by extrapolation. It was found that a plot of the unextrapolated values of the apparent ratio Gross Beta-to-Pr^{144} beta vs. the true Ce^{141}-Ce^{144} ratio (calculated) gave a straight line (Fig. 14). Admittedly, this is an empirical relationship, but a satisfactory one. The method is set up for a 7.7%-geometry Geiger-Mueller counter with a 2.7-mg/cm^2 tube window to avoid an extrapolation that would be highly uncertain at best.

NBS Iodine-131 Check Samples (W. S. Lyon). Solutions of iodine-131 have been received from the National Bureau of Standards for laboratory activity comparison. Aliquots of the samples were read on the ionization chamber and iodine-131 calculated. This is the routine method for iodine-131 analysis. In addition aliquots of the samples were coincidence counted. Aluminum absorbers were placed before the beta tube, and the disintegration rate was obtained as a function of absorber. The calculated rates were then plotted against the aluminum absorber, and the curve obtained was extrapolated to true (corrected for air and window) zero absorption. The observed beta counting rate and the coincidence counting rate were also plotted against the aluminum absorber. These curves were extrapolated to true zero, and the values so found were used to calculate the true disintegration rate of the sample. Table 9 summarizes the results obtained. It will be observed that agreement is quite good.

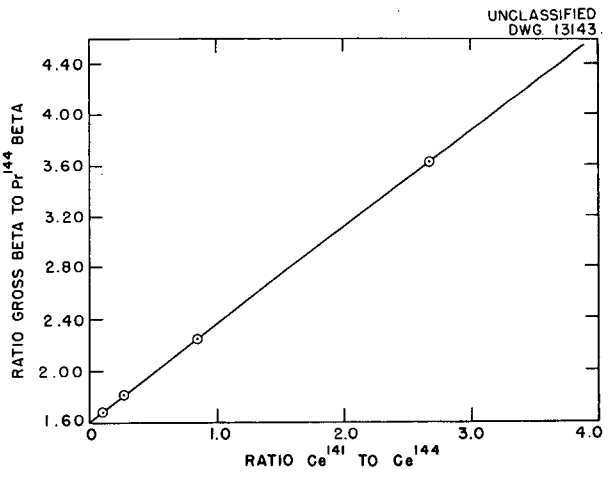

Fig. 14 - Ce^{141} in Ce^{141}-Ce^{144} Mixture.

Purity of Cesium-137 (W. A. Brooksbank, R. Regier*). P. R. Bell of the Physics Division, ORNL, has reported a gamma-emitting impurity in a cesium-137 product. Following the radiochemical qualitative analysis scheme given in ORNL-955[31] all of the activity was found in the alkali group. Ion-exchange column analysis[32] showed no activity bands eluting up to 7400 min. The elution is continuing, and the cesium-137 band is expected momentarily. This indicates that the impurities cannot be sodium, potassium, or rubidium. Another column run will be made on a new column as a further check.

Purity of Zinc-65 (D. J. Coombe, S. A. Reynolds). A quick and easy

*Phillips Petroleum Company.

(31) T. H. Handley, "Qualitative Analysis Scheme," *Analytical Chemistry Division Quarterly Progress Report for Period Ending January 10, 1951*, ORNL-955, p. 47.

(32) W. A. Brooksbank, "Alkali Metal Separations," *Analytical Chemistry Division Quarterly Progress Report for Period Ending October 10, 1950*, ORNL-867, p. 52.

TABLE 9

ORNL Assay of NBS Iodine-131 Solutions

SAMPLE	ACTIVITY (d/sec/ml)			
	EXTRAPOLATED β β-γ COINCIDENCE	EXTRAPOLATED (d/sec)	3038 ION CHAMBER	NBS VALUE
C 1	1.26×10^7	1.22×10^7	1.24×10^7	1.22×10^7
1	2.43×10^5	2.58×10^5	2.50×10^5	2.50×10^5

method of determining the presence of beta-emitting impurity in zinc-65 samples was derived after studying the decay scheme of zinc-65.[33] According to this decay scheme zinc-65 decays by positron emission (3%), K-capture, and gamma radiation. Of the K-captures, 46% go to a 1.11-Mev gamma level. Since positrons and beta particles are measured much more efficiently than gamma rays on helium—alcohol filled tubes, very small amounts of impurity will increase noticeably the ratio of total counts to gamma counts.

Aliquots of a purified zinc-65 sample with known amounts of phosphorus-32 and cobalt-60 added were pipetted and evaporated on 1-mil-thick polystyrene film mounted over 1-in. holes in standard aluminum counting cards.

Aluminum absorption curves were run using an end-window tube filled with helium-alcohol and a tube filled with argon-alcohol. The ratio of the gross count to apparent gamma count (thick absorber) was calculated (Fig. 15).

(33) "Nuclear Data," *National Bureau of Standards Circular 499*, p. 62, September 1, 1950.

It is apparent that the helium-filled counter is more efficient for detection of impurity than the conventional argon-alcohol counter. This is due to the low X-ray efficiency of the former.

As little as 0.2 to 0.3% of beta-emitting impurity can therefore be detected by measuring the "beta-gamma" ratio for an unknown sample of zinc-65 and comparing it with that for a known pure sample, using the same helium-filled counter. Data are given in Table 10.

TABLE 10

"Beta-Gamma" Ratios of Zn^{65} Samples Containing P^{32} and Co^{60}

P^{32} ADDED (%)	Co^{60} ADDED (%)	" BETA-GAMMA" RATIOS	
		HELIUM TUBE	ARGON—ALCOHOL TUBE
—	—	3.3	5.0
—	0.51	3.9	5.7
—	1.02	4.2	6.1
0.61	—	4.6	—
0.51	—	—	6.7
1.23	—	6.0	—
1.03	—	—	7.6

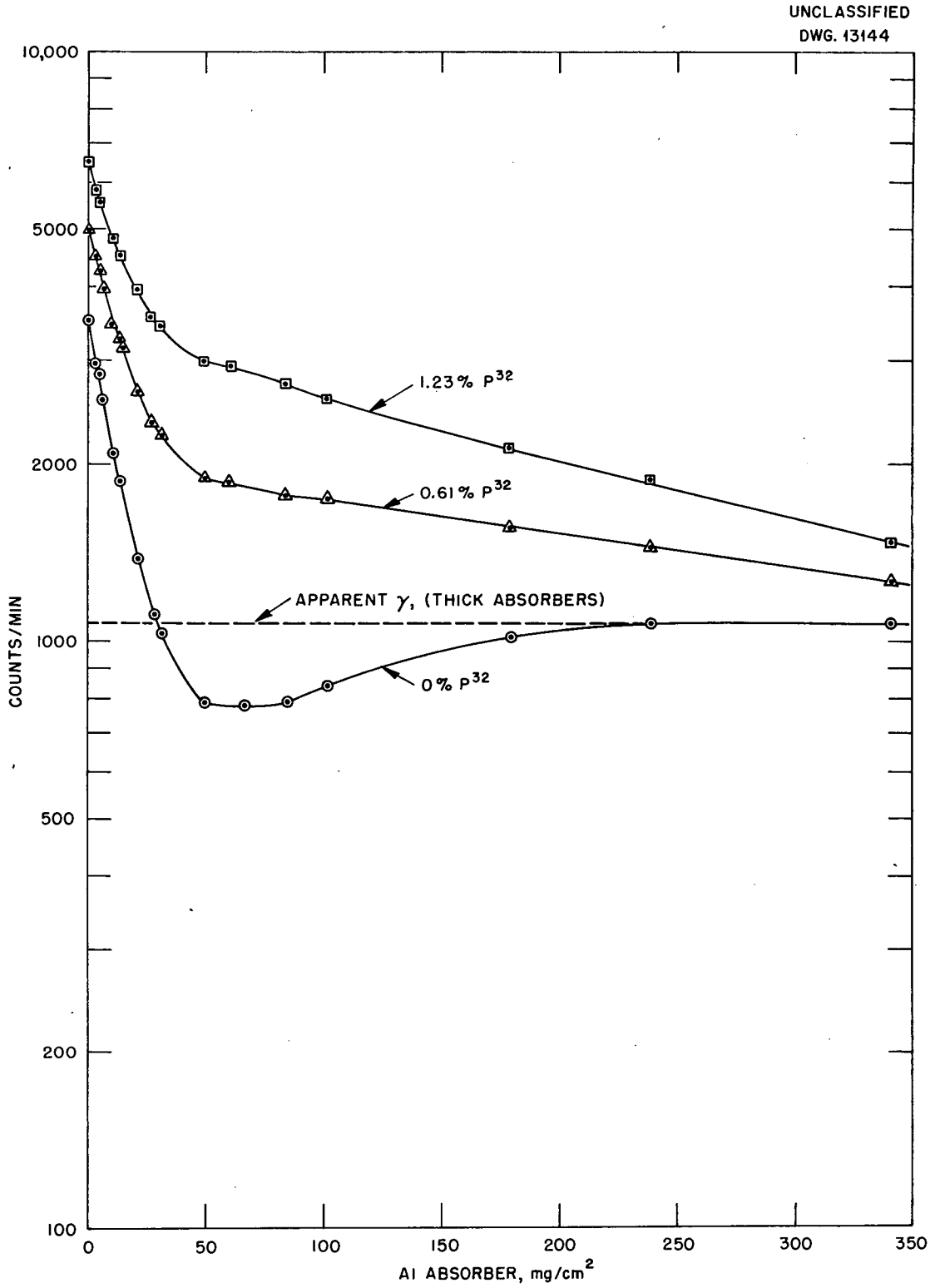

ALUMINUM ABSORPTION CURVES OF Zn^{65} SAMPLES (HELIUM COUNTER)

Fig. 15 - Aluminum Absorption Curves of Zinc-65 Samples.

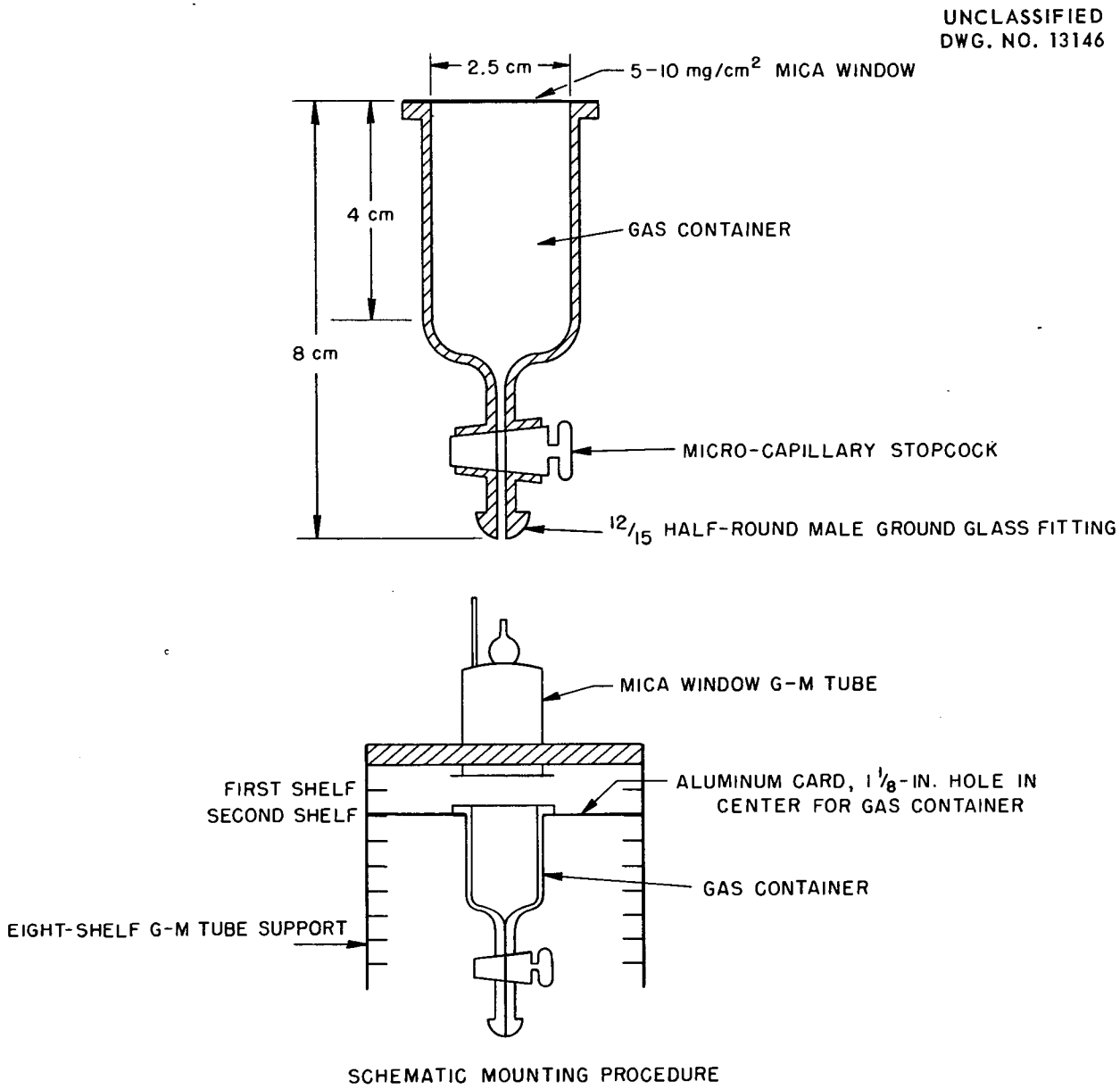

Fig. 16 - Gross Beta Mount for Noble Gas Analysis.

Radiochemical Gas Analysis

Noble Gas Analysis (W. A. Brooksbank, E. J. Fuller,* M. W. Echo*). The development of methods for the analysis of the off-gas stream at ARCO for xenon-135 and krypton-85 was started this quarter. The aim is to develop a method which approaches in simplicity the running of standard gross betas, that is, to prepare a type of mount which can be handled in the same manner as the usual radiochemical mount, and which may be used for absorption curves and decay studies. The gas samples, at known pressure and volume, will

*American Cyanamid Company.

be counted by end-window Geiger-Mueller tubes with second-shelf geometry. The proposed sample container and mounting arrangement are shown in Fig. 16. Absorption curves will be run in the usual manner, with the sample on shelf 2 and the absorbers on shelf 1. No attempt is to be made to separate xenon and krypton from each other. Half-life determinations will differentiate between xenon-135 ($T_{½}$ = 5.3 d) and krypton-85 ($T_{½}$ ~ 10 y).

The equipment planned includes a dilution buret, bubbler pipets to remove radioiodine, and a measuring buret and manometer. Preliminary design work is completed and equipment is being fabricated.

Solvent Extraction Methods

Extraction of Anionic Species (Niobium and Tantalum) (F. L. Moore). In an extension of the work described last year[34] in anionic solvent extraction studies, a new method for the separation of niobium from tantalum has been found. Niobium may be extracted essentially quantitatively from strong HCl with a solution of methyldioctylamine in xylene. Under these conditions the extraction of tantalum appears to be negligible. The niobium may then be stripped from the organic phase with HNO_3, H_2SO_4, or dilute (about 2 *M*) HCl.

Although much work remains to be done to establish the optimum conditions for the niobium-tantalum separation, the work done to date suggests that approximately 8 *M* HCl aqueous concentration is satisfactory. The conditions used were taken arbitrarily as follows. A 5-min extraction of the aqueous phase with an equal volume of 5% solution of methyldioctylamine in xylene was employed. Each phase was checked for niobium or tantalum gamma activity by use of the scintillation counter. The results of the initial investigation of the effect of HCl concentration on the extraction of niobium and tantalum are given in Tables 11 and 12, respectively.

TABLE 11

Effect of HCl Concentration on the Extraction of Nb^{95} with Methyldioctylamine in Xylene

HCl (*M*)	Nb^{95} EXTRACTED (%)
2	4.0
3	2.4
4	2.2
6	21.5
8	99.3
9.6	100.0
(control)-9.6 (no MDOA)	0.04

TABLE 12

Effect of HCl Concentration on the Extraction of Tantalum-182 with Methyldioctylamine in Xylene

HCl (*M*)	Ta^{182} EXTRACTED (%)
2.91	0.25
4.85	0.11
7.28	0.55
8.85	1.10

It has been found that niobium-95 does not extract appreciably from nitric acid concentrations up to

[34] F. L. Moore "Solvent Extraction Methods," *Analytical Chemistry Division Quarterly Progress Report for Period Ending January 10, 1951*, ORNL-955, p. 54.

10.6 *M* and from sulfuric acid concentrations up to 12 *M*. Tantalum-182 does not extract from nitric acid up to 10.6 *M* nor from higher concentrations of sulfuric acid, but appears to extract appreciably from 2 *M* H_2SO_4. This point is being checked.

Using the procedure given above Nb^{95}-Ta^{182} mixtures have been separated, and also nonradioactive niobium-tantalum separations at the 2-mg level have been effected.

Electrodeposition of Uranium (F. L. Moore). A request was received for two uranium sources, 2 mg U/cm^2, and attempts were made to plate macro quantities of uranium on zinc-plated aluminum foil. However, they failed, since good adherence is very difficult to achieve. This work has been discontinued for the present.

Thermal Neutron Flux in Slot 3 of Standard Sigma Pile (W. S. Lyon, R. H. Lewis*). The so-called "standard" sigma pile of the Physics Division, ORNL, has recently been recalibrated. The original calibration was made several years ago and was believed to have been in error by several per cent. As an independent check on the recent calibration, and as a test of a technique to replace the customary foil measurements, the thermal neutron flux in slot 3 was measured by an "absolute" counting method using powdered manganese metal.

A scintillation counter was calibrated for the three gammas of manganese-56 (0.83, 1.81, and 2.13 Mev). First, the absolute disintegration rate of manganese sample was obtained on the high-pressure gamma ion chamber. After several manganese-56 half-lives ($T_{½}$ = 2.59 hr), the sample was counted on the scintillation counter. The efficiency was determined to be 33%.

*Phillips Petroleum Company.

A sample of manganese, weighing 2.126 g, was exposed for a 2-hr bombardment in slot 3 of the standard pile. The powdered manganese metal was distributed evenly over the bottom of an aluminum foil holder of 25-cm^2 area. The activity was then measured on the scintillation counter and the flux was determined from the activation formula:

$$A = N_0\sigma(1 - e^{-\lambda t})$$

or

$$\phi = \frac{A}{N_0\sigma(1 - e^{-\lambda t})} .$$

The flux was found to be 9.215×10^3 neutrons/cm^2/sec.

A repeat sample was exposed in a cadmium box that was 20-mils thick and had the same dimensions as the aluminum foil holder. The activity of this sample indicated a flux of 7.05×10^2 neutrons/cm^2/sec due to "epicadmium" neutrons. By subtracting this flux from the bare determination, a thermal flux of 8.51×10^3 neutrons/cm^2/sec resulted.

The original calibration, as done by H. Jones and T. I. Arnette,* gave 8.57×10^3 neutrons/cm^2/sec. The recent calibration by E. Klema** and D. Ott** showed 9.10×10^3 neutrons/cm^2/sec, an increase of approximately 6%. No attempt was made to correct for the flux depression in the graphite caused by the manganese sample or by the indium foil in the original calibration. Klema and Ott have calculated that this perturbation of the flux by an indium foil 5 mils thick should be approximately 6%. It may well be that the powdered manganese metal causes a flux depression of the

*ORNL, Physics Division.
**Oak Ridge School of Reactor Technology.

same order of magnitude. It seems apparent that the manganese technique (with some refinements) could be used for thermal neutron flux measurements in cases where a standard pile permitting the use of the customary foil measurement is not available.

ACTIVATION ANALYSES

G. W. Leddicotte J. H. Oliver
C. D. Davidson P. Z. Westerdahl

Analytical Procedures

Sodium, Potassium, Rubidium, and Cesium. The use of precipitation methods to determine trace amounts of sodium, potassium, rubidium, and cesium by radioactivation analysis was described earlier.[35] These methods find good application in the analysis of those materials whose gross constituent is not an alkali metal. The separation of potassium from rubidium is achieved with reasonable decontamination of the latter element, however, in those cases where the potassium concentration is less that 0.01%, the accuracy and precision of the methods are unsatisfactory.

Brooksbank[36] has shown that sodium, potassium, rubidium, and cesium may be readily separated from each other by ion exchange. By use of a separation procedure similar to Brooksbank's, it has been possible to make a routine determination of sodium, potassium, and cesium in Rb_2CO_3. Trace amounts of these constituents, as well as trace amounts of rubidium, may be determined in other alkali compounds by neutron bombardment of the sample followed by ion-exchange separation.

Present facilities permit duplicate analyses for sodium and potassium to be made within 48 hr after submission of a sample. The analysis for rubidium and cesium requires about twice that time. The results of the determination of sodium, potassium, and cesium in two samples of Rb_2CO_3 analyzed by this method are given in Table 13.

TABLE 13

Determination of Sodium, Potassium, and Cesium in Rb_2CO_3 by Ion Exchange and Activation Analysis

(IR-1 resin; column length, 115 cm; flow rate, 1.25 ml/min; elutriant, 0.10 *N* HCl)

SAMPLE	METAL IN SAMPLE (%)		
	Na	K	Cs
1	Qualitative detection only	0.055	0.10
2	0.007	0.050	0.40

Experimental data are now being collected from runs being made on columns of Amberlite IR-100, Amberlite IR-105G, and Dowex-50 in order to determine whether these resins will effect a more rapid separation than will the IR-1 resin.

Manganese and Cobalt. Overman[37] refers to the preparation of aluminum alloys containing certain percentages of cobalt and manganese for use as neutron density monitors. The activity induced in the monitor clip was measured in an ion chamber[38] calibrated for detecting gamma radiation, and the

(35) G. W. Leddicotte, "Activation Analyses," *Analytical Chemistry Division Quarterly Progress Report for the Period Ending June 26, 1951*, ORNL-1113, p. 37.

(36) W. A. Brooksbank, "Application of Ion Exchange to Radiochemical Analysis," *Analytical Chemistry Division Quarterly Progress Report for the Period Ending October 10, 1950*, ORNL-867, p. 52-57.

(37) R. T. Overman, et al., *Descriptive Manual of Radioisotopes Produced by Neutron Bombardment in the Clinton Pile*, ORNL-4, (April 5, 1948), p.7.

(38) J. W. Jones and R. T. Overman, *The Use and Calibration of a 100% Geometry Ion Chamber*, MonC-399 (March 20, 1948).

TABLE 14

Determination of Cobalt and Manganese in Monitor Clips of Aluminum Alloy

(Comparative Data)

METAL DETERMINED	METAL FOUND (%)		
	BY ACTIVATION ANALYSIS	SPECTROCHEMICALLY	COLORIMETRICALLY*
Mn	0.74	0.71	0.73
Co	0.72	0.68	

*After periodate oxidation to permanganate.

average flux or neutron density for the neutron irradiation was calculated from the cross section, the time of irradiation, and decay before measurement. Manganese ($T_{½}$ = 2.59 hr) is used for monitoring short irradiations (up to 18 hr). Cobalt ($T_{½}$ = 5.3 y) is used to monitor longer irradiations (18 hr to 4 weeks or longer).

A similar batch of aluminum alloy was prepared by the Metallurgy Division for use in monitoring the neutron flux of the X-10 graphite reactor. The cobalt and manganese were determined by direct measurement of gamma activity on an ionization chamber and compared with a known amount of either pure manganese or cobalt irradiated at the same time and read on the same ionization chamber. The batch weighed several grams and was cut into strips approximately 1/2 in. by 1/8 in. by 3 ft. Homogeneity tests were made by activation analysis. These analyses showed equal distribution of the manganese and cobalt throughout the alloy.

A comparison of the activation analysis data with that from other analytical methods is given in Table 14.

Arsenic, Lead, and Copper. Trace amounts of these constituents in ion-exchange resins were determined by activation analysis. Adaptations of procedures found in a volume of radiochemical procedures edited by Meinke[39] were used in the determination of these constituents. The general procedure for analysis consisted chiefly of the ignition of the irradiated resin (except in the case of arsenic for which the resin was destroyed by HNO_3—$HClO_3$ mixture), and the addition of standardized carrier and holdback carriers, followed by final precipitation in the form shown in Table 15. All final measurements of the activity produced were made using comparative standards treated under similar conditions. Table 15 also shows the half-life and the radiation characteristics of the radioisotopes used in the determinations.

Table 16 gives the activation analysis results for arsenic, lead, and copper on three samples of ion-exchange resins analyzed by this method.

Procedures for Other Substances. Sulfur and phosphorous in oil shales

[39] W. W. Meinke, *Chemical Procedures used in Bombardment Work at Berkeley*, AECD-2738 (August 30, 1949).

TABLE 15

Pertinent Data Used in the Analysis of Ion-Exchange Resins for Trace Amounts of Arsenic, Lead, and Copper

STABLE ISOTOPE	RADIOISOTOPE PRODUCED BY (n,γ)	HALF-LIFE (hr)	TYPE OF RADIATION	PRECIPITATION FORM
As^{75}	As^{76}	26.8	β^-,γ	As_2S_3
Pb^{208}	Pb^{209}	3.3	β^-	$PbCrO_4$
Cu^{63}	Cu^{64}	12.8	K,β^-,β^+,γ	CuCNS

TABLE 16

Determination of Trace Amounts of Arsenic, Lead, and Copper in Ion-Exchange Resins by Neutron Activation Analysis

SAMPLE	METAL IN SAMPLE (%)		
	As	Pb	Cu
1	0.0001	0.50	0.0002
2	0.0001	0.80	0.0007
3	0.0001	0.40	0.010

and limestone are now being determined by activation methods. Ion-exchange methods are being evaluated for use in effecting separations on samples to be analyzed by activation analysis.

New Applications of Activation Analysis. Additional new applications of the method of activation analysis are suggested by inquiries regarding the possibility of determining trace amounts of barium in radium and trace metal constituents in silver storage batteries.

SPECTROCHEMICAL ANALYSES

A. Estepp J. Gillespie
C. Feldman M. Murray

Work was completed on "Photographic Photometry," a revised and enlarged version of a chapter on emulsion calibration and spectrochemical photometry procedures. This version includes sections on emulsion selection, optical alignment, light sources, calibration functions, the step sector, two-step and two-line calibration methods, background correction, inertia, and spectrochemical calculations. It is to be a part of the forthcoming ASTM (Committee E-2) book, *Suggested Methods in Spectrographic Analysis.*

American Cyanamid Co. employees R. Haldin, W. Morris, and P. O'Connor, all associated with the Arco Project, were trained in chemical preparation of samples, emulsion calibration, exposure techniques for radioactive and nonradioactive samples, and the qualitative and quantitative evaluation of spectrograms. Special emphasis was placed on the determination of trace impurities in uraniferous materials.

INORGANIC PREPARATIONS

R. H. Sampley

Phosphors. The preparation of phosphors of interest to the Physics Division continued. A list of the compounds prepared and the activators added is given in Table 17.

Other Preparations. In addition to the phosphors listed above the following compounds were prepared for the Physics Division: purified Li_2CO_3 (approximately 300 g), lithium fluoroberyllate (Li_2BeF_4, approximately 100 g), purified MnO_2 (approximately 140 g), and the stable isotopes neodymium-142 ethyl sulfate and neodymium-143 ethyl sulfate.

ANALYTICAL CHEMICAL CONTROL OF THE HRE SOLUTION

W. H. Davenport, Jr., R. H. Powell

"Princo Densitrol" (W. H. Davenport, Jr.). Two "Princo Densitrol" instruments have been received from the Precision Thermometer and Instrument Co. These instruments are specially constructed to withstand conditions at particular points in the HRE circulating system, while at the same time giving a continuous measurement and recording of the specific gravity of the soup. Both "Densitrols" are designed for use in the temperature range of 20 to 110°C and for the specific gravity range of 1.033 to 1.053 g/ml at 20/4°C. A third instrument for use at an operating temperature of 250°C is on order and should have been received by September 15, 1951.

One of the low-temperature units has been tested in the laboratory for the effect on its operation of changes in uranium concentration, flow rate, temperature, and bubble content of a uranyl sulfate solution. It will be tested further for the effects of the conditions of pressure, corrosion, erosion, etc., which are expected to exist in the HRE, by installation in a test loop now being assembled by C. Heisig at the Y-12 site. The point of installation in the test loop will be in a by-pass line carrying uranyl sulfate solution at a flow of approximately 0.07 gpm, and average temperature of about 70°C.

When the high-temperature instrument is received it will also be tested in the laboratory and then installed in the test loop in a 250°C stream.

If the results of these tests prove satisfactory, it has been proposed that the one "Densitrol" be installed in a by-pass line across the main heat exchanger of the HRE. The solution in this line will have a pressure of 1000 psi at 250°C and will be relatively bubble-free. The solution flow will be adjusted to 0.1 to 0.5 gpm.

Laboratory tests of the solution variables, flow rate, concentration, temperature, and bubble content, thus far show that the response of the low-temperature "Densitrol" is quite satisfactory.

The uranyl sulfate solution flow was varied from 0.1 to 0.33 gpm. The "Densitrol" responded by giving a maximum change in specific gravity readings of 1% of full scale or the density equivalent of 0.0002 g/ml.

The concentration of the uranyl sulfate in the "Densitrol" solution was decreased by dilution, and the specific gravity at two different concentrations was checked using a pycnometer. The results agreed with the "Densitrol" values in the fourth decimal place, which is equivalent to an error of less than 0.3% in

TABLE 17

Phosphors Prepared for the Physics Division

PHOSPHOR	ACTIVATOR TYPE	ACTIVATOR ADDED (%)	PHOSPHOR	ACTIVATOR TYPE	ACTIVATOR ADDED (%)
			Li_2BeF_4	Tl	5
LiI	Ag	0.3	Li_2SiO_3	Li_2SnO_3	10
LiI	Ce(III)	0.3	Li_2SiO_3	Li_2SnO_3	50
LiI	Ce(III)	10	Li_2SiO_3	Li_2SnO_3 +	4
LiI	Cu	0.3		TiO_2	1
LiI	Mn	0.3	Li_2SiO_3	Li_2SnO_3 +	10
LiI	Pb	0.3		TiO_2	1
LiI	Pb	10	Li_2SiO_3	Li_2SnO_3 +	50
LiI	Sb	0.3		TiO_2	1
LiI	Sb	10	Li_2SnO_3	LiCl	20
LiI	Sn	0.3			
LiI	Sn	10	Li_2SnO_3	SiO_2	3
LiI	Ti	10	Li_2WO_4	None	-
LiI	Tl	0.3	$Li_2Ca_2Si_3O_9$	None	-
LiI	Tl	10	$Li_2Ca_2Si_3O_9$	Ce(III)	1
LiI	Zr	0.3	Li_2SnSiO_5	None	-
LiI	Zr	10	Li_2SnSiO_5	Li_2SnTiO_5	2
Li_2O	None	-	Li_2SnTiO_5	None	-
Li_2O	Ce(III)	1	Li_4GeSnO_6	Ti	1
Li_2O	Pb	1	Li_4SSnO_7	Ti	1
Li_2O	Sb	1	Li_4SiSnO_6	Ti	1
Li_2O	Sn	1	Li_4ZrSnO_6	None	-
Li_2O	Ti	1	Li_4ZrSnO_6	Ti	1
Li_2O	Tl	1	$Li_6Ti_2Si_6O_{19}$	None	-
Li_2O	Zr	1	$Li_8Ca_6Si_5O_{20}$	Ce(III)	5
Li_2BeF_4	Cu	5	$Li_{12}Ca_4Si_5O_{20}$	Ce(III)	5
Li_2BeF_4	Sn	5			
Li_2BeF_4	Ti	5			

determination of uranium concentration. These results, however, were obtained while the temperature, flow rate, and bubble content of the uranyl sulfate solution were kept constant.

Temperature was next varied from 40 to 60°C with the instrument set at an average operating temperature of 50°C. The compensator for the temperature-density coefficient made correction for the changes in temperature, and the resultant chart readings showed a maximum deviation from the recorded value at 50°C of ±0.0002 g/ml in specific gravity. As explained above this deviation was acceptable.

Volumes of air were introduced into the line entering the sampling chamber. When there was no throttling on the outlet side of the chamber a 15-cc volume of air caused the plummet to assume false positions which lead to erroneous recordings. These errors, for the same air volume, were reduced to momentary pulsations by throttling on the outlet side of the chamber. The flow was reduced by a factor of 3 by the throttle.

Although the response of the instrument to these variables was satisfactory, the ultimate success of the "Princo Densitrol" in the HRE may depend upon whether satisfactory mechanical strength and corrosion resistance of the plummet material can be achieved.

Pyrex is probably suitable for use in a line whose temperature is 90°C or lower. Corrosion does not become serious until higher temperatures are reached. Sample pyrex plummets were tested for collapse strength and withstood pressures as high as 4000 psi.

It is indicated from the HRE corrosion studies of J. English of the Reactor Experimental Engineering Division that either titanium or stainless steel will probably be sufficiently corrosion resistant for use as plummet material at 250°C or higher. There are also indications that if plummets are fabricated from these materials their pressure stability may be poor. Considerable advantage has been gained by pressurizing the plummet internally with an inert gas, but the margin of safety achieved on the lone stainless steel plummet which has been completed is only about 500 psi above the 1000-psi operating pressure. A plummet fabricated from titanium would permit increased plummet wall thickness because it has a density lower than that of stainless steel and would provide a greater margin of safety. Such a plummet has been machined from titanium, but it has not been welded since the technique for this operation must be developed. Either the design of the plummets must be improved or precautions must be taken to protect the instrument from pressure surges if a "Densitrol" is to be used in the 250°C line.

Radiation-Resistant Glasses (R. H. Powell). Neutron-absorbing cadmium borofluosilicate optical glasses[40] have been examined for changes in their optical spectra after exposure in the X-10 graphite reactor, and the findings have been reported.[41] To determine whether further radiation damage will occur, these irradiated neutron-absorbing glasses have been returned to their former irradiation position in hole 60 of the X-10 graphite reactor for a second irradiation.

---

[40] W. H. Davenport, Jr., and R. H. Powell, "Analytical Control of the Homogeneous Reactor Solution," *Homogeneous Reactor Experiment Quarterly Progress Report for Period Ending November 30, 1950*, ORNL-925, p. 275.

[41] W. H. Davenport, Jr., and R. H. Powell, "Analytical Control of the Homogeneous Reactor Solution," *Homogeneous Reactor Experiment Quarterly Progress Report for Period Ending August 15, 1951*, ORNL-1121 (in press).

After their irradiation further measurements will be made on their optical spectra.

J. English of the Reactor Experimental Engineering Division is currently performing high-temperature and low-temperature chemical stability tests on specimens of the same glass melts that have not been irradiated.

Q **Measurement.** The bomb[42] designed for testing mechanical strength and performance of various *Q* coils and insulators has been altered to use independent gasketing (2 gaskets) of the ceramic with 18-gauge "*O*" rings. Also the shape of the ceramic collar of the *Q* coil has been revised. A detailed illustration of the modified bomb, rings, and modified *Q*-coil ceramic will be described in the HRP Quarterly Progress Report for the period ending November 15, 1951.

Of the glazes tested none has been found that will not crack during gasketing with either 3/16-in.-thick gold "*O*" rings or 0.040-in.-thick platinum "*O*" rings. These recent failures of glazes during the gasketing operation has lead to the procurement of an artificial mica-type material similar to the fluorine analogue of the natural mineral phlogopite. Two such hot-pressed synthetic-mica specimens, one a boron mica, $KMg_3BSi_3O_{10}F_2$, the other a barium mica, $BaMg_3Al_2Si_2O_{10}F_2$, have been supplied for our examination by R. A. Hatch, Chief, Synthetic Minerals Branch, U. S. Bureau of Mines, Electrochemical Laboratory, Norris, Tenn. Such micas are said to have a porosity approaching zero, and could possibly be made to have zero permeability by special fabrication technique. They would not require glazing, and could be molded, compressed, fired, and machined. By use of the technique of E. Cantrell of the ORNL Research Shops for fabricating *Q*-coil ceramics,[43] it might be possible to fabricate from the synthetic mica a satisfactory replacement for the *Q*-coil ceramic which could be successfully gasketed by conventional soft metal (gold or platinum) techniques.

The synthetic-mica disks received from R. A. Hatch will be tested for chemical stability in soup solutions by J. English. If they show chemical stability, an attempt will be made to secure molded compressed blocks of the synthetic mica encasing a *Q* coil. Hatch has indicated that the Electrotechnical Laboratories of the U. S. Bureau of Mines at Norris, Tenn., will cooperate in this work.

OPTICAL AND ELECTRON MICROSCOPIC ANALYSIS OF HRE CORROSION FILMS

T. E. Willmarth F. D. McNeer
B. I. Gary

Optical and electron microscopy are of significant value in the study of the corrosion problems of the HRE. By the use of these techniques it was shown previously[44] that oxide films produced on type-347 stainless steel by pretreatment of it with 1% HNO_3 at 250°C were not protective when subjected to conditions approximating those of an operating homogeneous reactor. Microscopic examination of the oxide film formed on an impeller during its operation in a thermal

(42) *Ibid.*

(43) "Development of Lava-Insulated Platinum Coil for Q Measurement of Soup," *Homogeneous Reactor Experiment Quarterly Progress Report for Period Ending November 30, 1950*, ORNL-925, p. 269.

(44) T. E. Willmarth, "Optical and Electron Microscopy," *Analytical Chemistry Division Quarterly Progress Report for Period Ending June 26, 1951*, ORNL-1113, p. 57.

test loop of uranyl sulfate at 250°C indicated that the oxide layer was nonprotective. There was evidence of localized corrosion in areas of turbulence of the solution near the outer edge of the impeller blades and of consequent differences of potential. Metallographic studies showed that the corrosion attack was largely intergranular in nature.

At the suggestion of H. C. Urey, consultant to the HRE, a program was inaugurated to study the effect of certain variables on the formation of surface oxide films on type-347 stainless steel using optical and electron microscopy. The variables selected include mechanical and chemical (i.e., pickling, etching, etc.) pretreatments of the metal surface, as well as the temperature and acid concentration of the passivating solution, and the time of immersion of the steel in the solution.

Initial work on the program has included optical and electron microscopic examinations of test samples of cold-rolled type-347 stainless steel before pretreatment, following polishing to show the nature and frequency of nonmetallic inclusions, and following pretreatments in 1% HNO_3 (analytical reagent grade) at 250°C for 4 hr and for 12 hr, the latter samples being contained in a new bomb. Work on this program is continuing.

Also in relation to the HRE program, a study was made of the corrosion resistance to high-temperature uranyl sulfate solutions of steel pretreated with chromic acid. Six samples of cold-rolled type-347 stainless steel were pretreated in 2% CrO_3 solution for 24 hr at 250°C and exposed in a new bomb to a 0.42 *M* uranyl sulfate solution at 250°C for periods from one to six weeks.

The one-, two-, and three-week test samples showed no significant change in appearance. An electron-diffraction pattern taken of material scraped from the four-week sample suggested that some reduction of the uranyl sulfate solution had taken place during that period. The pattern showed some lines of U_3O_8. Extreme line-broadening was noted indicating a very fine U_3O_8 crystallite size approaching the amorphous state. Mechanical removal of the U_3O_8 layer showed that the chromic oxide film which was laid down during pretreatment was still intact in places. However, where this film had been destroyed, pitting had taken place. During the fifth week of exposure significant reduction of the uranyl sulfate solution occurred. Large, nearly perfect hexagonal crystals were observed on the surface of the five-week test sample, as shown in Fig. 17. Subsequent examination of the smaller crystallites in the layer supporting these large crystals showed that they were also of the same nature. An electron diffraction pattern of dispersed crystallites in this sublayer contained many of the strong lines of U_3O_8. The six-week sample showed no trace of the U_3O_8 layer, but the metal surface was severely pitted.

An evaluation is being made of the protective nature of oxide films produced on steel immersed in a nitrate-eutectic fusion bath at elevated temperatures. The bath is composed of sodium, potassium, and lithium nitrates heated to 250 and 400°C. Samples of type-347 stainless steel have been prepared for this pretreatment by polishing, chemical etching, and electroetching. Areas on these samples containing inclusions and grains showing strain lines have been photographed at high power and the areas located and recorded. These

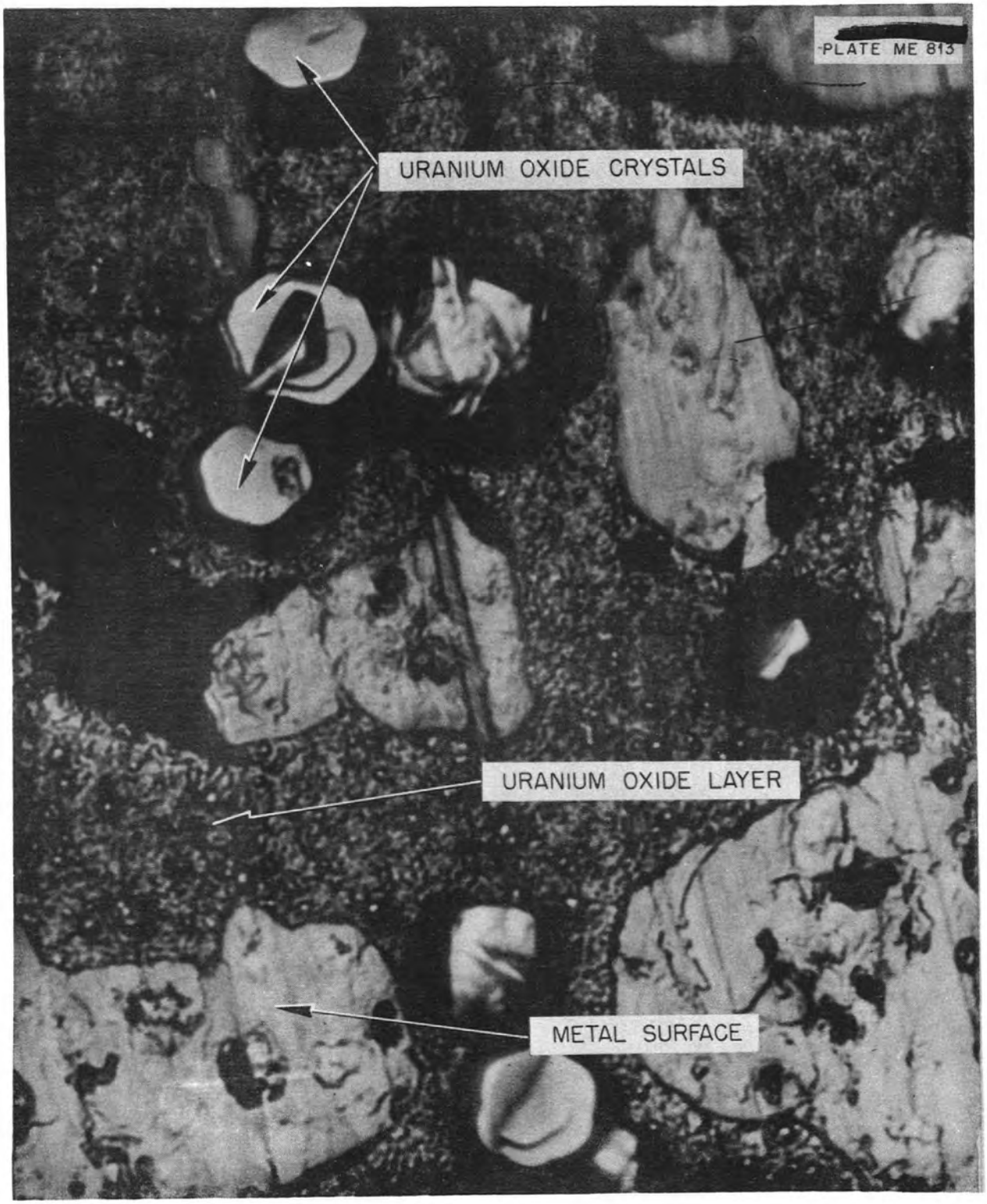

Fig. 17 - Formation of Uranium Oxide on Surface of Type-347 Stainless Steel After Five Weeks Exposure to 0.42 *M* Uranyl Sulfate Solution.

areas are to be reobserved and rephotographed after the film has formed, and again after subjection to corrosion tests.

Work was continued on the effect of radiation on painted surfaces. The cumulative results of this work will be reported by the Chemical Technology Division. Other service work has included determinations of the size and shape of asbestos fibers, and of the particle size of UO_3 in a finely divided state, of ZrO_2 calcined from zirconium salicylate, of $ZrCl_4$, of $NaAlO_2$, and of selected exchange resins.

CHEMICAL ANALYSIS OF HRE CORROSION FILMS

D. E. LaValle

In addition to optical and electron microscopy, chemical analysis is also being employed to elucidate the nature of passive films derived from the HRE corrosion studies.

The specimens were of type-347 stainless steel passivated under various conditions with CrO_3 and HNO_3. The passive films were removed according to the method of Mahla and Nielson[45] by treating the specimen with a solution of one part bromine to six parts of anhydrous methanol. This method was not uniformly successful. Some of the films became too finely dispersed to be collected easily. The time required to strip a film varied greatly among samples—from 5 min to 24 hr. During this time, and according to the length of time, insoluble substances in the stainless steel itself were isolated along with the true film. A new method being tried is electrochemical stripping in a 15% aqueous solution of HBr. The cathode is a small strip of platinum foil. The anode is the sample held with a pair of platinum-tipped tongs to the handle of which is connected a lead from the power supply. The specimens are cleanly stripped in a few minutes by this method, and the underlying metal is hardly attacked.

Constituents of type-347 stainless steel are iron, chromium, and nickel in large amounts, and columbium in a small amount. Traces of manganese, silicon, and phosphorous may be present. A spectrographic analysis of a preliminary sample of film showed iron, chromium, and columbium, the latter in significant amount. Since there is no satisfactory chemical method of analysis for traces of columbium it was arranged to have it determined spectrographically. This involved submitting the sample in an acid solution that prohibited the use of fluxes, which in turn prevented an analysis for silica. (A preliminary sample submitted for routine phosphorous and silicon determination showed no phosphorous and very little silicon.) It was decided to concentrate on the columbium initially.

The iron was run either colorimetrically by *o*-phenanthroline, by titration with $K_2Cr_2O_7$, or gravimetrically, according to its amount in the particular film. The chromium was run colorimetrically by the diphenylcarbazide or alkaline chromate methods, depending on its concentration range. The amount of chromium was never quite large enough for titration on the semimicro scale.

Various methods of dissolving the film of corrosion were tried. No one method could accomplish this however, and for certain other reasons (the

[45] E. M. Mahla and N. A. Nielson, "A Study of Films Isolated from Passive Stainless Steels," *Journal of the Electrochemical Society* 93, 1-16 (1948).

necessity of having columbium determined spectrographically, and the large amounts of iron in some samples causing interference colorimetrically) it was decided to undertake separations. The film was first treated with $HClO_4$ and the columbium and silicon isolated. The iron was then precipitated from the hexavalent chromium. Numerous tests failed to disclose any trace of nickel or manganese. It has been decided to analyze some future films specifically for silicon and take all the precautions that are impossible when other constituents are desired.

SERVICE ANALYSES

IONIC ANALYSES

P. F. Thomason

The ionic analyses service work required by the HRE, ANP, and Pu Isolation programs has remained high this past quarter. The types of analyses required by these programs have already been discussed.[1]

RADIOCHEMICAL ANALYSES

S. A. Reynolds

Most of the analyses performed were for the Chemical Technology Division in connection with the gaseous waste program. These included iodine, gross beta, decay studies, etc. A few identifications were run for the Health Physics Division, which involved chemical separation and decay studies. Special radioisotope products were assayed and tested for purity for the Operations Division.

ACTIVATION ANALYSES

G. W. Leddicotte

The miscellaneous service analyses made by the activation analyses group are reported in Table 21.

GENERAL RADIOCHEMICAL ANALYSES

C. L. Burros

Modifications to Zirconium Method. Modifications to the method for determining zirconium[2] have been developed to provide for samples of (1) high plutonium content, and (2) high UX activity. The former samples were prepared for the zirconium determination by reduction of the plutonium with hydroxylamine hydrochloride and its removal with the rare earths in the lanthanum fluoride precipitate. In the latter case potassium thorium fluoride (K_2ThF_6) precipitation is made along with the lanthanum fluoride precipitation, by addition of 6 *M* potassium fluoride and a small amount of thorium carrier.

Modifications to Strontium Method. Strontium activities of samples containing large quantities of calcium may be determined by a procedure based on the insolubility of $Sr(NO_3)_2$ and the solubility of $Ca(NO_3)_2$ in absolute alcohol. This procedure is being added as a preliminary step in the method for strontium activities.[3]

Modified Mount Assembly for Count Measurements. A modified technique for mounting samples for count measurement[4] has been evaluated. Reduction of the variability in the vertical positioning of the watch glass in the mount assembly is accomplished. The modifications consist in replacing the rectangular cellophane strip used to cover the watch glass with a cardboard of the standard dimensions but having a cellophane sheet laminated to its upper surface. The watch glass is held against the film sheet, so as just to touch it, by a cardboard of smaller length and perforation diameter that is stapled to the upper cardboard. The modified assembly is shown in Fig. 18.

---

(1) P. F. Thomason, "Ionic Analyses — Development Group," *Analytical Chemistry Division Quarterly Progress Report for Period Ending January 10, 1951*, ORNL-955, p. 65.

(2) D. N. Hume, N. E. Ballou, and L. E. Glendenin, "Zirconium," *A Manual of the Radiochemical Determination of Fission Product Activities*, CN-2815 (June 30, 1945), p. 27.

(3) *Ibid.*, "Barium and Strontium," p. 23.

(4) *Ibid.*, "Mounting and Counting," p. 5.

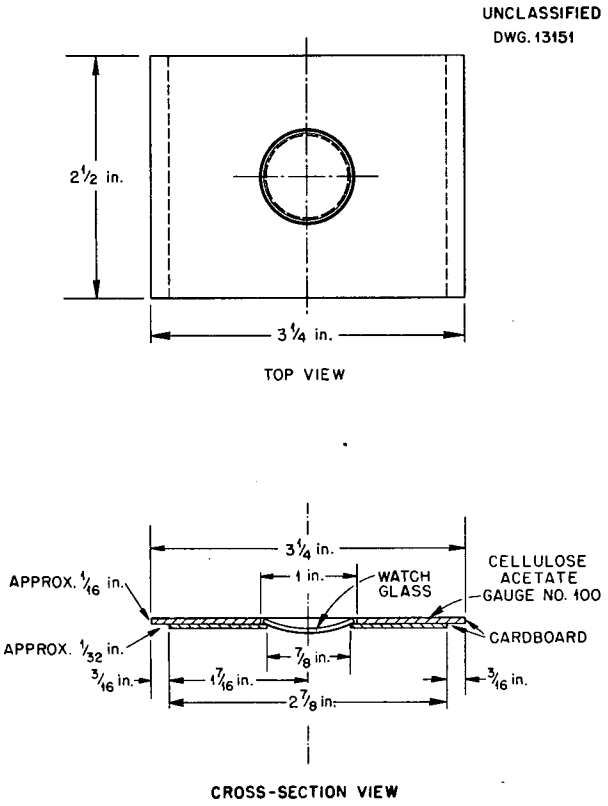

Fig. 18 - Modified Mount Assembly for Count Measurements.

The results of gross beta counts, which are given in Table 18, indicate the improvement in reproducibility offered by the new mounting technique. No further evaluation of the technique is planned.

Modification to Method for UX Activity. The method for the determination of UX activity[5] has been modified for samples of high plutonium content. The plutonium is oxidized with approximately 0.2 *M* sodium dichromate and removed in the supernate after the potassium-thorium-fluoride precipitation.

[5] N. E. Ballou and D. N. Hume, "Determination of UX Activity in Process Solutions," *Final Report, Development of Methods for the Determination of Fission Product Activities in Plant Process Solutions*, CN-AN-1312 (Limited), p. 97.

WATER ANALYSIS LABORATORY

J. H. Edgerton

Determination of Boron. The determination of boron was required in the analysis of Inconel and stainless steel alloys submitted by the Metallurgy Division. A method was adapted by which boron is separated from interfering substances by distillation as methyl borate from a solution containing methyl alcohol and phosphoric acid.[6] Following distillation of the boron as methyl borate, the methyl ester is hydrolyzed by sodium hydroxide and titrated after being complexed with mannitol. A distillation apparatus made of low-boron quartz[7] (shown in Fig. 19) is used. The methanol purification apparatus[8] is illustrated in Fig. 20, and the dissolution flask in Fig. 21. The details of the procedure are to be recorded in a formal analytical method.

Typical data for the boron content of Inconel alloy determined by this method are given in Table 19. These data indicate that the method is accurate to at least ±2%.

Determination of Fluoride. The determination of fluoride has been required in the analysis of samples submitted from several projects. These samples have included uranyl fluoride salts from the fuel solubility studies of the HRE, the UF_4-NaF-KF eutectic salts from the ANP study of the high-temperature reaction of liquid fuels, thorium breeder salts, and others.

[6] W. W. Scott and S. K. Webb, "Determination of Minute Amounts of Boron in Soils," *Ind. Eng. Chem., Anal. Ed.* 4, 180 (1932).

[7] L. V. Wilcox, "Determination of Boron in Natural Waters and Plant Materials," *Ind. Eng. Chem., Anal. Ed.* 2, 358 (1930).

[8] J. H. Edgerton, Secret Notebook, CL-1699, p. 96-100.

TABLE 18

Gross Beta Activity Determined by Modified Sample-Mounting Technique

ANALYST	GROSS BETA ACTIVITY (cpm/ml)			
	STANDARD METHOD		MODIFIED METHOD	
	SAMPLE 1			
1	7.77	7.57	7.15	7.42
	7.94	7.38	7.14	7.30
	8.04	7.42	7.44	7.17
	7.83	7.88	7.35	7.09
	7.29	7.61	7.53	7.41
	7.26	7.48	7.25	7.24
	Standard Deviation, 10.2% Mean Deviation, 2.9%		Standard Deviation, 6.0% Mean Deviation, 1.6%	
	SAMPLE 2			
2	6.07	5.72	5.73	5.56
	6.01	5.72	5.51	5.52
3	5.82	6.06	5.54	5.78
	5.84	5.84	5.46	5.65
4	5.70	5.74	5.66	5.64
	5.79	5.86	5.60	5.44
	5.63	5.87	5.46	5.67
	5.82	5.94	5.56	5.70
	Standard Deviation, 7.5% Mean Deviation, 1.7%		Standard Deviation, 6.1% Mean Deviation, 1.5%	

The fluoride was determined by separating it as fluosilicic acid from the sulfuric acid solution of the sample by steam distillation at 135 ± 1°C.[9,10] The fluosilicic acid was then titrated with thorium nitrate using alizarin sulfonate as the indicator.[10,11] An apparatus having modifications in addition to those described by Armstrong[12] is illustrated in Fig. 22.[13] Details of the procedure and the necessary precautions to be observed in the analysis are to be described in a formal analytical method.

Data obtained using this method for the analysis of a variety of samples are given in Table 20. The

[9] H. H. Willard and O. B. Winter, "Volumetric Method for Determination of Fluoride," *Ind. Eng. Chem., Anal. Ed.* 5, 7 (1933).

[10] L. Safranski, "Determination of Fluorine in Uranium Tetrafluoride," *Metallurgical Project Report for Month Ending November 15, 1942, Chemistry Group C-1*, CC-342, p. 4.

[11] W. D. Armstrong, "Microdetermination of Fluorine," *Ind. Eng. Chem., Anal. Ed.* 8, 384 (1936).

[12] W. D. Armstrong, "Modification of the Willard-Winter Method for Fluorine Determination," *J. Am. Chem. Soc.* 55, 1741 (1933).

[13] J. H. Edgerton, Secret Notebook, CL-1699, p. 83-86 and 93-95.

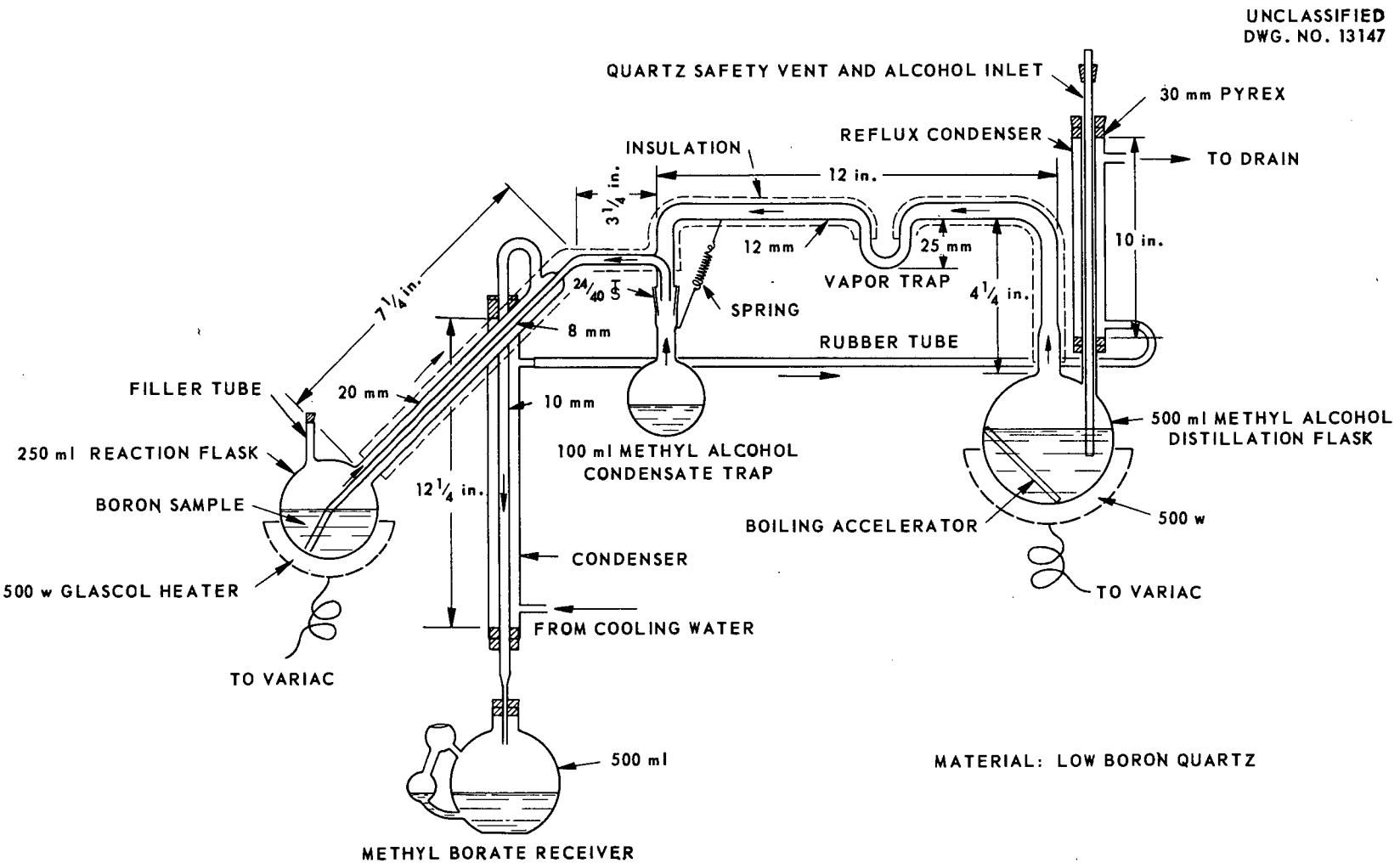

Fig. 19 - Boron Distillation Apparatus.

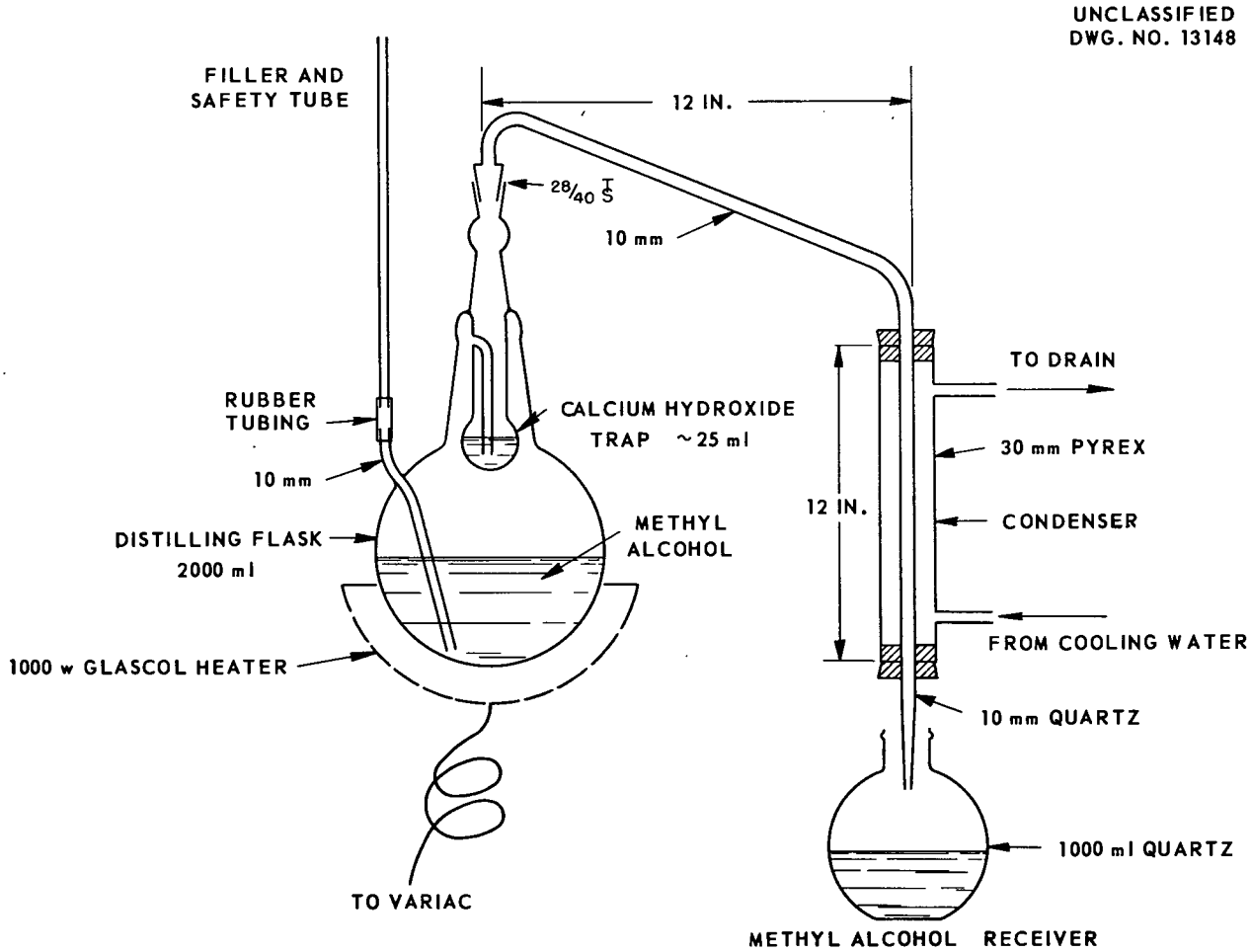

Fig. 20 - Methanol Purification Apparatus.

accuracy of the method is estimated to be ±3% or better.

Other Analyses. The Metallurgy Division is studying the corrosion effects of baths of liquid UF_4, NaF, and KF on Inconel, Timpkin, and molybdenum-nickel alloys. Samples from these studies were analyzed for fluoride, boron, sodium, uranium, iron, nickel, chromium, and molybdenum by methods reported previously.

The carbon combustion apparatus has been converted to use for determination of micro amounts of carbon in alloys. Bureau of Standards samples of stainless steel alloys having carbon concentration as low as 50 ppm were analyzed satisfactorily.

Zirconium-uranium alloys were analyzed for the Metallurgy Division. The alloys were dissolved with mixed acids, and the uranium oxidized to the hexavalent state with nitric and perchloric acids. The zirconium was precipitated with cupferron, the precipitate ignited and redissolved, and the zirconium precipitated again with phenylarsonic acid, ignited and weighed as ZrO_2. The uranium in the filtrate from the cupferron precipitation was determined colorimetrically by the ammonium thiocyanate method.

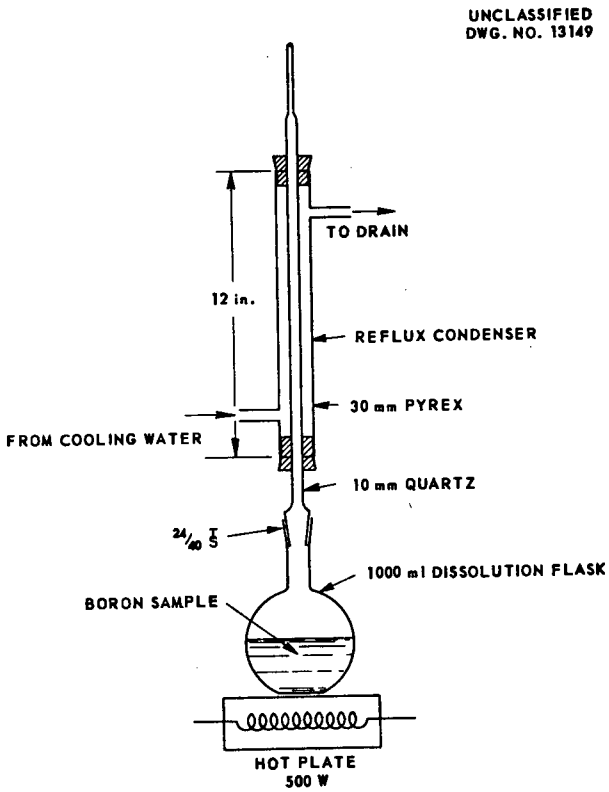

Fig. 21 - Dissolution Apparatus for Samples Containing Boron.

TABLE 19

Boron in Inconel Alloys and Boric Acid Samples

SAMPLE	BORON (%)	
	TAKEN	FOUND
Inconel alloy 1	0.008*	0.010
Inconel alloy 2	0.008*	0.010
Inconel alloy 3	0.008*	0.009
Boric acid (Baker and Adamson, CP reagent)	1.000	1.003
	1.000	1.018
	1.000	1.004
	1.000	0.999

*Determined from manufacturer's report of analysis.

Polarographic determinations of lead, tin, zinc, cadmium, cobalt, and nickel were made for the Chemical Technology and Health Physics Divisions, and for the Physics of Solids Institute.

Analyses were made for the Metallurgy Division of samples from their study of corrosion attack of bath metals of lead, lithium, and sodium, and of eutectic salts (UF_4, NaF, and KF) on stainless steels and high-temperature alloys. The elements determined were lead, sodium, lithium, bismuth, uranium, thorium, titanium, molybdenum, fluorine, and chromium.

Alloy samples from the ANP studies of radiation damage to metals were analyzed for copper, silica, iron, titanium, aluminum, and beryllium.

Analytical assistance was given to the Chemical Technology Division in their study of pulse-column extractions in the Purex program.

Other chemical analyses were performed as indicated in Table 21.

LABORATORY AND SEMI-WORKS CONTROL

L. T. Corbin

The use by the Pu isolation group of an ion-exchange procedure for the final purification of plutonium in the Purex process necessitated the determination of plutonium by either direct counting or spectrophotometrically using thoron reagent. The latter method is under study, and its final evaluation is pending procurement of a primary plutonium standard.

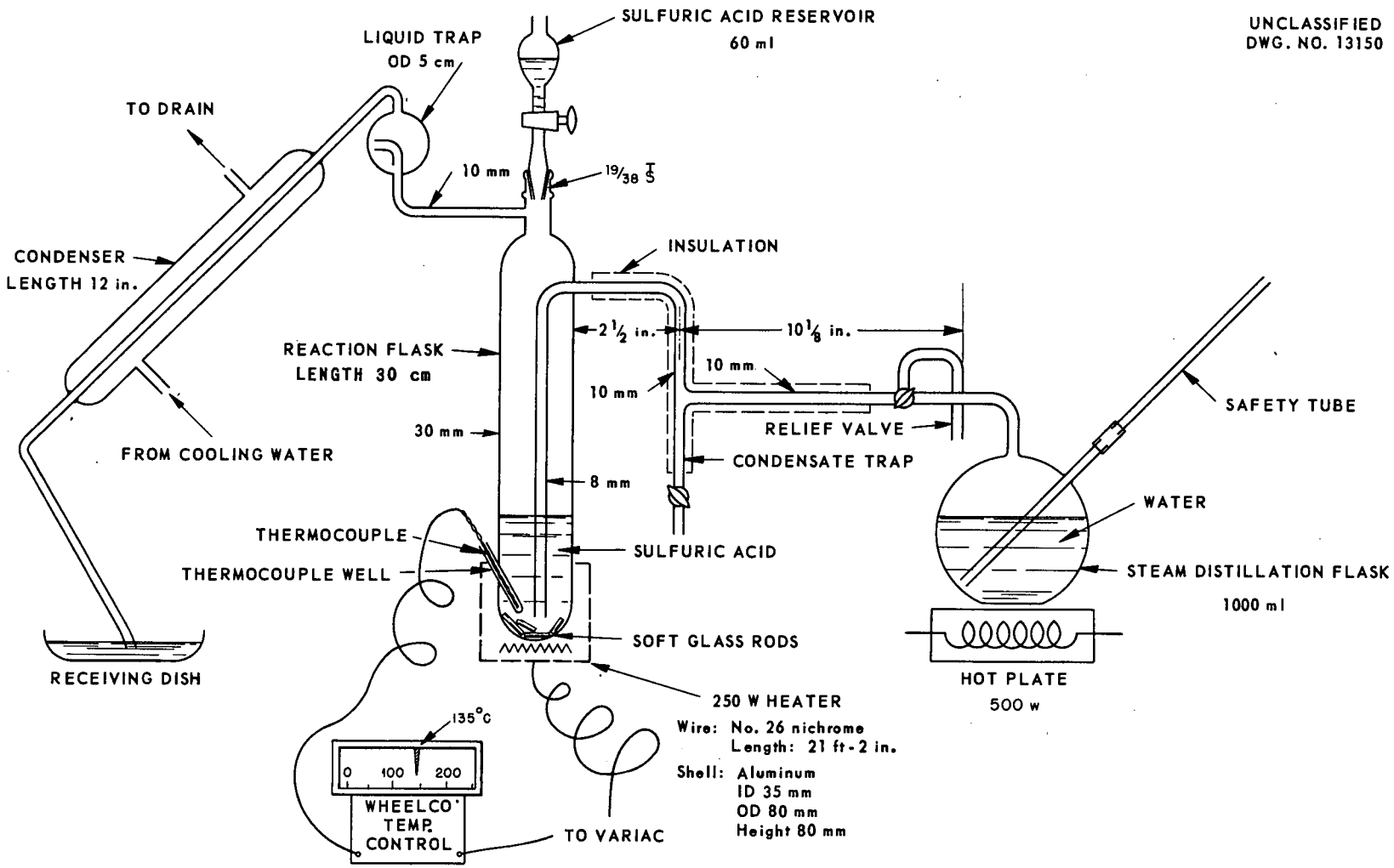

Fig. 22 - Fluoride Distillation Apparatus.

TABLE 20

Fluoride by Modified Willard-Winter Distillation Method

SAMPLE	SAMPLE SOURCE	FLUORIDE, AS % F	
		ESTIMATED	FOUND
NaF	Baker and Adamson, CP Reagent	45.2	45.1
ThF_4	ORNL - S & F Material	24.7	25.0 24.8 24.9
KPF_6	Ozark-Mahoning Co. (98-100% pure)	61.9	61.5 60.7 61.8 61.5 60.3 61.9 61.8 62.0
NH_4PF_6	Ozark-Mahoning Co.	70.0	71.8 71.8 71.7
Eutectic Salt (UF_4-NaF-KF)	HRE	28.3	28.2 28.4 28.3 28.2

The following analyses, performed by the methods indicated, were required by the thorex process development group:

ANALYSIS	METHODS
U^{233}	Direct alpha counting Hexone extraction Acridine precipitation
Th	Spectrophotometric (thoron reagent)
Pa^{233}	Diisopropyl carbinol extraction
HNO_3	Volumetric (after oxalate complexing of thorium)

Miscellaneous analyses requested by other groups are summarized in Table 21.

PILOT PLANT CONTROL

E. J. Frederick

Two methods have been put into routine use for control of the Purex process. They are the falling-drop method for determining specific gravity of Purex feed solutions,[14] and the method for determining TBP in Purex solvent by measurement of dielectric constant.[15]

[14] M. T. Kelley, *et al.*, "Specific Gravity of Make-Up Solutions," *Method No. 51, Manual of Analytical Procedures of the Uranium-235 Recovery Process*, ORNL-983 (August 20, 1951).

[15] ___, *Estimation of Tributyl Phosphate (TBP) in Mixtures of TBP-Varsol*, ORNL-599 (February 21, 1950), p. 4.

TABLE 21

Summary of Analytical Service Work at X-10 Site for Period June 27 Through September 26, 1951

	NO. OF PERSONNEL		ORNL DIVISIONS REQUESTING ANALYSES									OTHERS REQUESTING ANALYSES					
	TECHNICAL	NON TECHNICAL	ANP	CHEM. TECH.	CHEMISTRY	ENGR. & MAINT.	HEALTH-PHYSICS	METALLURGY	OPERATIONS	PHYSICS	REACTOR TECH.	AMERICAN CYANAMID	ARGONNE NATL. LAB	K-25	MIT PRACTICE SCHOOL	ORSORT	TOTAL DETERMINATIONS
GROUP MAKING ANALYSES			NUMBER OF DETERMINATIONS														
Activation Analyses	1	3	6		12			2	12								32
Radiochemical Development	5	0		220			11		40			3				1	275
Ionic Development	5	1	92	40	502												634
Spectrochemical	4	0		332	98		2	171	22	10	53						678
General Radiochemical	5	5		7,795			373										8,168
Water Analyses	2	5		634	62	17	6	510	57	32			30				1,348
Laboratory and Semi-Works Control	3	11		11,056	22				107								11,185
Optical and Electron Microscopy	3	1		203	72		55	3	4	3	191			79	4		614
Pilot Plant	5	17		16,295													16,295
Radioisotope Production Control	5	17		6,610	139		70		6,592								13,411
TOTALS	38	60	98	43,175	907	17	517	686	6,834	45	244	3	30	79	4	1	52,640

Revisions have been made to the lanthanum fluoride precipitation method for plutonium for the purpose of clarification, and to the procedure for measuring gross beta activity of aqueous and organic samples, so that it now conforms with that used by the Radiochemical Laboratory.

A broad program of work has been initiated to determine the accuracy and precision of the analytical methods currently in routine use in the Pilot Plant Control laboratories. A report will be made when the study is completed.

Service analyses are summarized in Table 21.

RADIOISOTOPE PRODUCTION ANALYSES

E. I. Wyatt

The analytical service work of the radioisotope production group is reported in Table 21.

HRE ANALYSES

U. Koskela

A new group was organized to perform the analytical service work required by the HRE project. It is to be located in the new 7500 area.

The current personnel requirements for the group have been met and training has been given in the methods, techniques, and instruments to be used. All the analytical service work performed to date has been reported through the ionic analyses group.

ANALYTICAL CHEMISTRY DIVISION—Y-12 SITE

RESEARCH AND DEVELOPMENT

R. Rowan, Jr.

ANALYSIS OF URANYL SULFATE SOLUTIONS

O. Menis F. E. Jenkins
C. K. Talbot J. E. Lee

Determination of Uranium by Spectrophotometric Methods. The need for a rapid and accurate method for the determination of uranium in essentially pure aqueous uranyl salt solutions of relatively high concentration (30 to 40 mg U/ml) has led to an investigation of the application of differential spectrophotometry to this problem.

Spectrophotometric absorbancy measurements utilizing the "differential technique" offer a procedure which is comparable in precision and accuracy with the gravimetric and volumetric methods. The absorbancy of uranyl solutions at 412 mμ, without added chromogenic agent, is utilized.

In this method, the theoretical aspects of which have been discussed by Hiskey,[1] Bastian, *et al.*,[2] the unknown is compared directly with a standard solution. The standard is placed in the blank position, and by increasing the slit width of the monochromater the optical-density scale is set to zero. Higher concentrations of the unknown samples are then read in the usual way against this zero-point standard. From the relative absorbancy of a series of standard solutions, which differ in concentration by increments of a few milligrams per milliliter, the factor is determined. The equation for the determination of the concentration of the unknown is as follows:

$$C = F(A_r) + B_{st},$$

where C = concentration of unknown in mg per ml,

$F = \frac{\Delta c}{A_r}$ = factor derived from a series of standard solutions,

Δc = difference in concentration in mg/ml between a standard solution and the zero-point standard,

A_r = relative absorbancy of sample against zero-point standard,

B_{st} = concentration of zero-point standard in mg per ml.

The method can be applied to those solutions which obey the Beer-Lambert absorption law under the conditions of measurement imposed by this technique (broad spectral band; high absorbancy). Experimental conditions must be carefully controlled, that is, the standard and the unknown must be kept at the same temperature, the positioning of absorption cells must be reproducible, and corrections must be made for any light-path differences between cells.

The study of this method involved the testing of the over-all accuracy and precision of the method, and the effects of temperature variations, of free acid concentration, and of the presence of trace elements.

---

[1] C. F. Hiskey, "Principles of Precision Colorimetry," *Anal. Chem.* 21, 1440 (1949).

[2] R. Bastian, R. Weberling, and F. Palilla, "Differential Analysis with a Beckman Spectrophotometer," *Anal. Chem.* 22, 160-166 (1950).

TABLE 22

Precision in the Determination of the Factor in Differential Colorimetry Applied to Uranyl Solutions

EXPERIMENT NO.	DATE	NUMBER OF STANDARDS*	SPREAD IN URANIUM CONCENTRATION** (mg/ml)	AVERAGE*** FACTOR, F	STANDARD DEVIATION, S (mg/ml)	NOTES
			$UO_2(NO_3)_2$			
1	7-12-51	6	32-46	30.7	0.9	1
2	7-12-51	6	32-46	29.8	0.5	
3	7-13-51	6	32-46	29.7	0.5	
4	7-13-51	4	36-46	30.1	0.4	
5	7-13-51	8	26-46	29.6	0.5	2
			UO_2SO_4			
6	7-14-51	7	29-37	21.3	0.3	3,4
7	7-15-51	7	29-37	21.3	0.3	4
8	7-15-51	6	31-37	21.0	0.3	5
9	7-18-51	7	24-35	20.2	0.8	6
10	7-18-51	7	28-38	20.5	0.4	
11	7-18-51	7	28-38	20.4	0.2	
12	8-24-51	14	22-50	20.8	0.3	
13	8-27-51	5	44-50	21.3	0.2	
14	8-31-51	12	25-46	20.1	0.3	7a,b
15	9-6-51	12	24-50	21.0	0.3	8
16	7-24-51	6	28-38	20.5	0.2	9
17	7-26-51	6	28-38	20.6	0.1	
18	7-26-51	4	28-38	20.54	0.04	

Average standard deviation: For $UO_2(NO_3)_2$ = 0.56 mg/ml (= 1.9%); For UO_2SO_4 = 0.29 mg/ml (= 1.4%)

*Number of standard solutions prepared and used for determination of relative absorbency.

**Spread gives the range of concentrations of the standards.

***Factor determined from $\Delta c/A_r$ by measuring the highest concentration vs. the lowest concentration.

Notes

1. Experiments 1 to 14 carried out by operator A.
2. Positioning of cells was reversed.
3. Standard solutions of UO_2SO_4 were prepared by weighing, from a weight burette, a concentrated uranyl sulfate solution, and diluting the solution in calibrated volumetric flasks.
4. Room temperature 28 ± 1°C.
5. New corex cells used.
6. New standard solutions prepared; room temperature 32°C.

7a. Temperature 32°C.

7b. Beckman Spectrophotometer Model D.

8. Temperature 27°C.
9. Experiments 15 to 18 carried out by operator B.

The data in Table 22 are presented to show the effect of variations in experimental conditions on the value of the factor $\Delta c/A_r$, and the precision attained in its determination. The average standard deviation in the determination of this factor for UO_2SO_4 solutions was 1.9%. Variations of this order in the value of the factor under a given set of experimental conditions would be reassuring even if the accuracy of the method depended upon the accuracy of the factor to a greater degree than it actually does. As the concentration of the standard is made to approach that of the unknown, the magnitude of the effect of an error in the factor diminishes. Thus, in the equation $C = F(A_r) + B_{st}$, for very small values of A_r, the term involving the factor F has a negligible effect on the magnitude of C.

A variation of four degrees in the temperature of the solution changes the value of the factor by as much as 5% (Table 22). Thus, for very accurate results, the temperature of the unknown sample should be within a few tenths of a degree of that of the standard.

Finally, the effect of free acid and the presence of trace elements must be known, and these factors have been studied to some extent. Solutions which were 0.25 N with respect to sulfuric acid and which contained 32.1 and 35.4 mg/ml of uranium were analyzed by this method and found to contain 32.1 and 35.8 mg/ml, respectively. In the presence of as much as 80 μg/ml of chromium, 9 μg/ml iron, 30 μg/ml of nickel, and 30 μg/ml of manganese, the accuracy was of the same order as with pure uranyl solutions (Table 23, Series II). Control Sample 1 of this series contained the trace elements in the concentrations listed above, while Samples 2, 3, 4, and 5 contained lesser amounts of the same elements. The maximum tolerance of the method for each of these trace impurities has not yet been determined.

With relatively pure uranyl solutions and a Beckman Model D spectrophotometer operating under satisfactory laboratory conditions, the method appears promising from the standpoint of both accuracy and rapidity. Further work will be carried out in the range of applicability of this method.

Determination of Uranium(IV). A method for the determination of uranium(IV) in uranyl salt solutions has been described in a previous report.[3] This method has recently undergone a slight modification. The substitution of ammonium acetate for ammonium nitrate, which is added at the time of precipitation of UF_4, has eliminated a tendency toward high results. It is believed that high results may be caused by the coprecipitation of ammonium diuranate with the UF_4, and that the introduction of the complexing acetate ion prevents such coprecipitation.

Uranium oxide (UO_3) slurries are also analyzed for uranium(IV) by this method.

Uranium by Specific Gravity Measurements. A study was undertaken of the density-concentration relationship of pure, aqueous solutions of uranyl sulfate for the purpose of evaluating the feasibility of determining uranium concentrations of such solutions by a method based primarily on specific gravity measurements. The method is needed for, and well suited to, the rapid determination of the uranium content of

[3] M. T. Kelley and C. D. Susano, "Analysis of Uranyl Sulfate Solutions," *Analytical Chemistry Division Quarterly Progress Report for Period Ending June 26, 1951*, ORNL-1113, p. 73.

TABLE 23

Determination of Uranium(VI) in Uranyl Sulfate Solutions by Differential Colorimetry

SERIES	CONTROL SAMPLE NUMBER	URANIUM (mg/ml)						
		OPERATOR A			OPERATOR B			
		PRESENT*	FOUND	DEVIATION				
I	32	29.1	28.8	-0.3				
	32	29.1	29.0	-0.1				
	34	36.4	36.1	-0.3				
		36.4	36.3	-0.1				
	36	33.4	33.0	-0.4				
			33.1	-0.1				
	37	46.7	46.4	-0.3				
	39	35.0	35.3	+0.3				
			35.1	+0.1				
					SUBGROUP 1**		SUBGROUP 2**	
					FOUND	DEVIATION	FOUND	DEVIATION
II***	1	30.5	30.4	0.1	30.8	+0.3	30.7	+0.2
	2	35.4	35.2	0.2	35.8	+0.4	35.2	-0.2
	3	40.4	40.3	0.1	40.2	+0.2	40.5	+0.1
	4	50.2	50.0	-0.2	50.0	-0.2	50.3	+0.1
	5****	150.1			150.4	+0.3	150.4	+0.3

*As determined gravimetrically.

**The measurements in Subgroup 1 were made with differences between zero-point standard and known of 2 to 10 μg/ml. In Subgroup 2, these differences were all less than 2 μg/ml.

***Sample 1 contained 80 μg/ml Cr, 9 μg/ml Fe, 30 μg/ml Ni, and 30 μg/ml Mn. Samples 2, 3, 4, and 5 contained lesser amounts.

****Diluted before measurement of absorbancy.

large numbers of corrosion test solutions that are essentially pure and relatively dilute.

It was proved that the specific gravity is essentially a linear function of the concentration of uranyl sulfate. The change of specific gravity with concentration is of sufficient magnitude to make possible the determination of uranium to an accuracy of 1% or better over the range 5 to 75 mg U/ml.

It is sometimes necessary to make uranium determinations on solutions that contain small amounts of free sulfuric acid. Accordingly, the effect of the presence of sulfuric acid was determined and incorporated into the equation expressing the uranium—specific gravity relationship.

Control of the temperature is important. It is probable that deviations of no more than ±0.5°C can be tolerated if an accuracy of 1% is

to be maintained. The initial tests designed to set forth the relationship between specific gravity and temperature, however, were found to be inadequate and this relationship is still under investigation.

At 30°C, the following expression holds true for uranyl sulfate solutions in the range 5 to 75 mg U/ml:

$$U = 732.4 \times 10^{-0.013\,N}\,S - 730.5 \ .$$

In this equation U is the concentration of uranium in mg per ml, N is the normality of the solution with respect to free sulfuric acid, and S is the specific gravity. The data set forth in Table 24 demonstrate the validity of this equation. Calculated values of uranium concentration are within 1% or better of values taken from the standard curve, which was constructed from experimental data.

Trace Metal Determinations in Uranyl Salt Solutions. In connection with studies of corrosion stability in HRE test loops, a knowledge of the concentrations of the trace elements cobalt, copper, molybdenum, manganese, titanium, tungsten and zirconium is necessary. Methods for the determination of these elements in uranyl salt solutions have been investigated.

Cobalt. The colorimetric method for the estimation of cobalt, based upon the formation of a tetraphenylarsonium thiocyanate complex and the extraction of the blue complex with chloroform, was adopted. The work

TABLE 24

Determination of Uranium by Specific Gravity Method — Calculated Values Vs. Values from Standard Curve

URANIUM (mg/ml)			NORMALITY OF URANYL SULFATE SOLUTION WITH RESPECT TO FREE H_2SO_4*
STANDARD CURVE	CALCULATED	DIFFERENCE	
27.4	27.2	+0.2	0.0
32.5	32.6	-0.1	0.01
37.6	37.2	+0.4	0.05
43.2	43.2	0.0	0.01
47.1	46.8	0.3	0.2
45.7	45.5	0.2	0.0
43.0	43.0	0.0	0.01
39.2	38.8	0.4	0.05
33.5	33.5	+0.0	0.10
29.2	29.4	-0.2	0.2
33.1	32.8	+0.3	0.05
39.1	39.0	0.0	0.03

*Sulfuric acid in excess of that present as a result of hydrolysis of UO_2SO_4.

was based on the report of Furman and McDuffie.[4]

The extraction was carried out at pH 4 to eliminate the interference of iron. The recovery of cobalt from samples to which known amounts had been added is set forth in Table 25.

TABLE 25

Determination of Cobalt in UO_2SO_4 Solution — Recovery in Prepared Samples

SAMPLE	COBALT (μg/ml)			RECOVERY (%)
	ADDED	FOUND	RECOVERY	
1	0	23.5		
	5	28.5	5.0	100
2	0	27.0		
	5	31.7	4.7	94
3	0	27.0		
	5	31.7	4.7	94

Titanium. Two methods were studied for the determination of titanium at concentrations of 1 μg or less per ml of uranyl salt solutions. In the first procedure, titanium is separated by an ammonia precipitation with aluminum ion as a gathering agent, from a solution in which uranium is complexed with carbonate ion. The recovery of titanium in prepared samples was of the order of 70%. The second method utilizes the titanium-thymol color in the presence of uranium. This procedure, as described by McDuffie,[5] was modified by using sulfurous acid to quench the fluorescence of the uranium-thymol solution, displacing the gas bubbles with nitrogen gas, adding the reagent and reading immediately the absorbancy vs. a blank of pure uranium solution. In the method described in the document cited above, sulfur dioxide was added and the solution was allowed to stand in the dark until free of gas bubbles. In the modified method the precision with standard solutions was of the order of 2% relative error. The recovery of titanium from prepared samples, as set forth in Table 26, also indicates satisfactory accuracy and precision.

TABLE 26

Determination of Titanium in Uranyl Sulfate Solution — Recovery in Prepared Samples by Thymol Method

SAMPLE NO.	TITANIUM (μg/ml)			RECOVERY (%)
	ADDED	FOUND	RECOVERY	
1	0	20.1		
	24.2	48.4	28.3	116
2	0	24.8		
	24.2	51.3	26.5	109
3	0	0		
	24.2	24.1	24.1	99.5
4	0	2.9		
	24.2	26.5	23.6	98.3
5	0	1.3		
	24.2	26.1	24.8	102
6	0	0		
	24.2	25.4	25.4	105
7	0	0		
	24.2	23.8	23.8	98.3
8	0	1.8		
	24.2	27.0	25.2	104

Manganese. Manganese was determined colorimetrically by oxidation to permanganate and measurement of the absorbancy of the permanganate solution at a wave length of 525 mμ. Of the two most commonly used reagents

[4] N. H. Furman, B. McDuffie, *Notes on Various Photometric Procedures*, M-4239 (December 1947) p. 12.

[5] —, —, G. H. Bonsall, *op. cit.*, p. 17.

for this oxidation, periodate and persulfate (silver catalyzed), the former, while being of lower sensitivity, yields more reproducible results. The procedure as described by Rodden[6] was modified by warming the solution for 30 rather than for 5 min after addition of the oxidizing agent and before reading the absorbancy, because it was demonstrated that the longer time is required to insure maximum color development.

The data of Table 27 indicate that the precision and accuracy of the method are satisfactory, although in the very low ranges of concentration relative errors are likely to be high.

Molybdenum. Traces of molybdenum in uranyl sulfate solutions are determined by extracting the molybdenum—thiocyanate complex from an acid solution with butyl acetate. The procedure as described by Rodden[7] was adopted for this determination.

Tungsten. Microgram quantities of tungsten in uranyl salt solutions are best determined by first separating the element from the main component. After separation, the tungsten is determined colorimetrically. Preliminary attempts to precipitate tungsten in the presence of added aluminum as a gathering agent, by the addition of ammonium carbonate, were unsuccessful. Organic reagents such as α-benzoinoxime[8] will be tested for this purpose. A colorimetric procedure which makes use of a stannous chloride—thiocyanate reagent for developing the color, as modified by Freund,[9] was sufficiently sensitive and precise as is demonstrated in Table 28. For this determination there was a standard deviation of the factor of ±15.

Zirconium. Methods were investigated for the determination of zirconium in microgram quantities or less in uranyl solutions. The colorimetric procedure which makes use of *p*-dimethylaminoazophenylarsonic acid[10] was first tested. Difficulties were encountered in attaining satisfactory precision, the

TABLE 27

Determination of Manganese in UO_2SO_4 Solutions

PART A - CONTROL SAMPLES

SAMPLE NO.	MANGANESE (μg/ml)		DEVIATION	
	ADDED*	FOUND	(μg/ml)	(%)
1	30.5	30.0	-0.5	-1.7
2	15.1	14.0	-1.1	-7.3
3	5.0	4.0	-1.0	-20
4	2.0	1.0	-1.0	-50
5	0	0.4	+0.4	

PART B - " SPIKED" SAMPLES**

SAMPLE NO.	MANGANESE (μg/ml)		RECOVERY	
	ADDED	FOUND	(μg/ml)	(%)
6	0	30.3		
	20.0	49.8	19.5	97.5
7	0	17.6		
	20.0	37.4	19.8	99.0
8	0	0		
	20.0	19.4	19.4	97.0

*Synthetic samples.

**True values not known.

[6] C. J. Rodden, *Analytical Chemistry of the Manhattan Project* (New York: McGraw-Hill, 1950), p. 441.

[7] *Ibid.*, p. 454-455.

[8] *Ibid.*, p. 456.

[9] H. Freund, M. L. Wright, and R. K. Brookshier, "Colorimetric Determination of Tungsten," *Anal. Chem.* 23, 781-784 (1951).

[10] C. J. Rodden, *op. cit.*, p. 478.

TABLE 28

Determination of Tungsten by the Stannous Chloride—Thiocyanate Method

(Precision in the Determination of the Factor)

TUNGSTEN (μg/ml)	ABSORBANCY *	FACTOR**
0.33	0.204	490
0.66	0.413	484
0.99	0.660	470
1.33	0.875	457
		Average = 475

*Absorbancy was determined in 10-cm cells.

$$**\text{Factor} = \frac{\text{concentration } (\mu g/ml) \times \text{final volume (ml)}}{\text{absorbancy}}$$

principal source of error being attributable to the incomplete decomposition of the zirconyl-dye complex with ammonia prior to the measurement of the absorbancy of the dye solution. Precision was improved by using filter sticks in place of filtering crucibles and heating the filter stick with its precipitate in the original reaction beaker after the addition of ammonium hydroxide. Because of the tediousness of this procedure, tests were made with other colorimetric reagents such as alizarine, β-nitroso-α-napthol, and 8-hydroxyquinoline and chloranilic acid. Of these, the first two lack the required sensitivity, while 8-hydroxyquinoline is not selective, and an excess of the reagent interferes in the determination. The most promising reagent appears to be chloranilic acid, which forms, as was shown by Thamer,[11] a complex with zirconyl ion in a perchloric acid solution having an absorption maximum at 350 mμ. The method is so very sensitive that as little as 0.1 ppm of zirconium can be determined. The calibration factor (slope of the absorbancy vs. concentration curve) can be checked with standard solutions to a precision of approximately 2%. A study of the effect of other ions is now in progress. The interference of iron was determined, and it was found that 2 ppm of iron gave an optical density reading approximately equivalent to 0.1 ppm of zirconium. Future work will include the study of the interferences of other anions and cations and the investigation of suitable methods for the separation of zirconium from uranyl solutions.

Determination of Halides. The determination in microgram quantities of halides in uranyl sulfate solutions has been investigated. An argentometric method has been checked for its applicability in determining chloride, bromide and iodide, and also, in the case of the iodide, an iodine-thiosulfate titration method was investigated. The argentometric titration was carried out potentiometrically with the aid of a silver-silver halide indicator electrode and a saturated calomel reference electrode, an agar-ammonium nitrate bridge being used. A Precision Scientific Co. automatic titrimeter equipped with a 1-ml capacity syringe for introducing the titrant was used in the titration. The titration was carried out in a methanol solution. In the case of the iodine-thiosulfate titration, a platinum-rhodium indicator electrode and a calomel reference electrode were employed, and the change of potential was read with a Beckman pH meter. The oxidation and distillation of microgram quantities of iodide were carried out in an apparatus as described by Rodden.[12]

[11] B. J. Thamer, and A. F. Voigt, "Zirconium Chloranilate Complexes," *J. Am. Chem. Soc.* 73, 3197 (1951).

[12] C. J. Rodden, *op. cit.*, p. 293-294.

TABLE 29

Determination of Iodide in Uranyl Sulfate Solution — Comparison of Two Methods

METHOD	NUMBER OF DETERMINATIONS	IODIDE (μg)*		STANDARD DEVIATION	DEVIATION	
		PRESENT	FOUND		(μg)	(%)
a	3	10.0	12.2	0.4	+2.2	+22
a	3	20.0	23.8	0.7	+3.8	+19
a	3	40.0	47.6	0.9	+7.6	+19
b	3	12.0	16.8	0.5	+4.8	+40
b	3	20.0	24.4	1.4	+4.4	+22
b	3	30.0	31.9	3.3	+1.9	+11

Methods:

a. Silver nitrate and automatic titrimeter.

b. Iodine, by sodium thiosulfate potentiometric titration.

*Results obtained after blank correction.

The substitution of a potentiometric end point for the conventional starch indicator eliminated some of the corrections required for an indicator blank, which is an important source of error in micro titrations. The silver halide method, because of the simplicity and speed of the procedure, has been adopted for the determination of iodide in HRE solutions. The best results were obtained when a blank titration was carried out after each determination in order to determine the necessary correction. The factor obtained with standard iodide solutions from the plot of recordographic units (volume of titrant) vs. iodide concentration, in a range from 0 to 100 μg in a volume of 10 ml was reproducible to approximately 1%. This range corresponds to 0 to 100 μg/ml of I_2 in the original solution.

For the iodide distillation and thiosulfate titration method, as shown in Table 29, the precision was not as good with the argentometric titration, although the accuracy was approximately the same for the two methods.

DETERMINATION OF DISSOLVED HYDROGEN IN HRE SOLUTIONS

O. Menis and F. E. Jenkins

A method was required for the determination of the few ppm of hydrogen present in equilibrium with uranyl salt solutions at high pressure in HRE test loop systems. Fresenius[13] has described a semiquantitative method for hydrogen in which the hydrogen is adsorbed on palladium in a molybdate solution, the molybdate is reduced to molybdenum blue by hydrogen, and the color of the reduced solution is

[13] R. Fresenius and G. Jander, *Handbuch der analytischen chemie* (2nd ed., Vol. Ia; Berlin: Springer-Verlag, 1944), p. 5.

compared visually with a blank. A study was made to determine whether this method could be made quantitative and whether the limits of sensitivity could be extended.

The investigation of the method required the construction of a glass apparatus in which all reactions could be carried out in a closed system in the absence of air. The essential parts of the apparatus are: a nitrogen-hydrogen gas-mixing system, a colloidal palladium-molybdate adsorption system, a calibrated dilution system, and a spectrophotometer cell. The mixture is passed through the adsorption reagent several times by means of a standard expansion bulb system. The solution, after all the hydrogen has been adsorbed, is allowed to flow into an evacuated dilution buret where it is diluted to the proper concentration to permit direct spectrophotometric absorbancy readings. From this buret the solution flows into an evacuated 5-cm absorption cell, and its optical density is measured at either 540 or 825 mμ. The use of the higher wave length permits measurements to be made over a greater range of hydrogen concentration without the need of excessive dilutions, although there is an accompanying loss of sensitivity. Optical density values for synthetic mixtures of hydrogen and nitrogen, when plotted against hydrogen concentration, fall on a straight line. The results indicate that the method is suitable for the quantitative determination of hydrogen in the range of 0 to 10 ppm if the optical density is determined at 540 mμ and for higher concentrations (probably up to 25 ppm) when the optical density is measured at a higher wave length (825 mμ).

The method has been tested so far only on synthetic samples, although it is expected that samples drawn from HRE test loops will be available for analysis in the near future. In this case, the test gas will consist of the residue from the oxygen determination.

DETERMINATION OF URANIUM TRIFLUORIDE

W. K. Miller and D. L. Manning

Uranium trifluoride has recently been prepared in anticipation of its use in the preparation of eutectic salt mixtures for reactor fuels. The compound has been prepared at several temperatures, ranging from 800 to 1150°C, by the Ames method,[14] which involves the heating of stoichiometric quantities of uranium tetrafluoride and finely divided uranium, the latter being prepared by the thermal decomposition of uranium hydride. In order to estimate the purity of the UF_3 and to determine the optimum temperature of preparation, it is necessary to develop a method for the determination of UF_3 in the presence of tetravalent uranium.

Uranium and fluoride determinations are obviously of no value in the analysis of the product, since these quantities are fixed by the ratios of the starting materials. An oxidation-reduction method appears to be the logical choice provided it can be assumed, when the product is ground in the presence of air, that any residual uranium metal is oxidized completely to the dioxide. This appears to be a logical assumption in view of the known pyrophoric behaviour of finely divided uranium.

It was hoped that an oxidizing agent could be found which would oxidize uranium(III) to uranium(IV) and, at the same time, would have

[14] A. S. Newton, J. C. Warp, O. Johnson, and R. Nottorf, *Uranium Hydride*, CC-1201 (January 1, 1944).

no effect on the tetravalent uranium. Since water slowly oxidizes trivalent uranium, it was not possible to dissolve the solid first; rather, it was always necessary to add the oxidizing agent directly to the sample.

Since ferric salts in the presence of fluoride are inactive toward uranium(IV), it appeared that a standard solution of ferric sulfate in the presence of hydrofluoric acid might be a suitable oxidizing agent. However, oxidation under those conditions was much too slow, even with the application of heat. Water rather than the ferric ion appeared to be the true oxidizing agent.

Preliminary tests were made of ammoniacal silver nitrate as the oxidizing agent, but this reagent was eliminated from consideration because it appeared that uranium was being oxidized to the hexavalent state.

Hydrochloric acid dissolves uranium trifluoride in the presence of boric acid or aluminum salts according to the following reaction:

$$4UF_3 + 4HCl \longrightarrow UCl_4 + 3UF_4 + 2H_2 .$$

Consideration of the foregoing reaction suggested that it might be possible to determine UF_3 either by dissolving the sample in an excess of standard acid and back-titrating to determine the loss in acidity or by measuring the volume of evolved hydrogen. In either case air must be excluded to prevent air oxidation.

Although the method based on the decrease in acidity proved impractical, the hydrogen evolution method appears promising. For this purpose, an apparatus has been assembled which is similar to that used for the Dumas nitrogen determination, except that a reaction flask fitted with a dropping funnel replaces the Dumas combustion tube. The apparatus is swept out with CO_2, and concentrated HCl is then added from the dropping funnel to a mixture of the sample and boric acid. The reaction flask is heated gently, and the volume of evolved hydrogen is measured in a gas buret in which the confining liquid is KOH solution. It is necessary to apply a blank correction, the magnitude of which is dependent on the amount of CO_2 used to sweep the hydrogen into the buret. Although early tests indicated that results were not reproducible, reduction in the size of the apparatus, with subsequent reduction of the time required for sweeping out the apparatus, has resulted in satisfactory precision.

Another promising method for the determination of uranium trifluoride is based on the total reducing power of the uranium(III) and uranium(IV). By determining total uranium and total reducing power of the sample, it is possible to set up the following simultaneous equations from which the quantity of trivalent uranium can be calculated:

$$x + y = \text{total weight of uranium, g,}$$

$$\frac{3x}{0.238} + \frac{2y}{0.238} = \text{total milliequivalents of uranium,}$$

in which x and y represent the weights of uranium(III) and uranium(IV), respectively.

By solving the equations for the weight of uranium(III) and converting to equivalent UF_3, the purity of the sample can be determined. Total uranium is determined by the standard ceric sulfate titration method[15]

[15] TEC-CEW, *Manual of Standard Analytical Methods*, pp. 1-49 (December, 1945).

TABLE 30

Determination of Uranium Trifluoride — Comparison of Results by Two Methods

SAMPLE NO.	TEST	URANIUM TRIFLUORIDE (%)	
		CERIC SULFATE METHOD	HYDROGEN EVOLUTION METHOD
1	1	91.1	90.8
	2	91.2	90.0
	3	89.2	89.7
	4	89.9	91.2
	5	93.5	
	6	90.7	
	Average	90.9	90.4
2	Average*	75.7	74.7
3	Average*	79.9	81.4
4	Average*	70.8	70.6
5	Average*	87.6	86.6
6	Average*	84.1	88.4
7	Average*	65.2	64.8
Estimated Standard Deviation (average)		2.0	0.9

*Average of at least four tests.

after dissolving the sample in perchloric acid and fuming to remove fluoride. The total reducing power of the sample is determined as follows: An excess of standard oxidizing agent is added to a mixture of the sample and aluminum sulfate and, after complete dissolution, the excess oxidizing agent is determined by back-titration.

Potassium dichromate was first used as the oxidizing agent, but because of the difficulty in obtaining reproducible results on the back-titration with ferrous ion, ceric sulfate was substituted for dichromate. A very sharp end point was obtained on the back-titration, and the precision was good. Ceric sulfate was also used as the oxidizing agent in the determination of total uranium. Results by the ceric sulfate oxidation method and the hydrogen evolution method are compared in Table 30. In the case of sample 1, a group of individual values is given to illustrate the precision of the two methods.

Although no standard sample is available for a direct test of the two methods, the agreement between the methods indicates that either can be satisfactorily used to determine uranium trifluoride. The precision of the gas evolution method, however, can be expected to be superior.

OXYGEN IN SODIUM

J. C. White and W. J. Ross

The *n*-butyl bromide method for the determination of oxygen in sodium has been described in previous reports.[16,17]

At the present time no further information is available concerning the accuracy of the method, but test results for a considerable number of samples have been accumulated which permit a reevaluation of the precision of the method. These data (Table 31) reveal that the precision has been improved significantly as a consequence of minor improvements in technique. Specifically, the standard deviation for oxygen concentrations over the range 0.02 to 0.06%, as calculated from the average range for 31 duplicate determinations, is 0.003%. Initially, tests of the precision of this method had indicated the standard deviation to be of the order of 0.005%.

The 31 samples analyzed were contained in two-bulb glass sample tubes which were filled by drawing molten sodium into the tubes. The question has often been raised as to whether this method of sampling causes segregation of the oxide; if so, then it would be anticipated that a significant difference would be found in the oxygen content of the sodium in the upper and lower bulb of the sample tubes. That no such segregation occurs will be evident from even a cursory examination of the data of Table 31, Columns A and B. The oxygen contents of the upper and lower bulbs are essentially the same in almost every case.

TABLE 31

Test Results for Determination of Oxygen in Sodium

SAMPLE	OXYGEN A UPPER BULB	OXYGEN B LOWER BULB	DIFFERENCE A - B
1	0.022	0.020	0.002
2	0.024	0.023	0.001
	0.023	0.025	-0.002
3	0.024	0.026	-0.002
4	0.027	0.025	0.002
5	0.025	0.027	-0.002
6	0.024	0.030	-0.006
7	0.028	0.027	0.001
8	0.029	0.029	0.000
9	0.029	0.029	0.000
10	0.027	0.031	-0.004
11	0.026	0.033	-0.007
12	0.030	0.030	0.000
13	0.030	0.030	0.000
14	0.029	0.032	-0.003
15	0.030	0.031	-0.001
16	0.032	0.029	0.003
17	0.035	0.030	0.005
18	0.032	0.036	-0.004
19	0.034	0.034	0.000
20	0.035	0.034	0.001
21	0.035	0.038	-0.003
22	0.038	0.043	-0.005
23	0.047	0.039	0.008
24	0.051	0.039	0.012
25	0.053	0.052	0.001
26	0.055	0.054	0.001
27	0.052	0.064	-0.012
28	0.063	0.057	0.006
	0.052	0.061	-0.009
	0.059	0.052	0.007
		Algebraic Sum	-0.012
		Average Difference	0.003

Number of cases in which: A > B = 13
B < A = 13

Standard Deviation:
Calculated from average range, 0.0030
Calculated from sum of variance, 0.0034

(16) M. T. Kelley and C. D. Susano, *Analytical Chemistry—ANP Program Progress Report for Period Ending May 31, 1951*, Y-B31-260, p. 6.

(17) J. C. White and R. Rowan, Jr., *The n-Butyl Bromide Method for the Determination of Sodium Monoxide in Sodium*, Y-B31-251 (April 24, 1951).

The lower limit of oxygen in sodium found in samples submitted thus far has been approximately 0.015%. It is presently anticipated, however, that the work of the ANP Experimental Engineering group will result in the purification of sodium to an oxygen content of 0.005% or lower. In order to provide an analytical method for oxygen in this range, the *n*-butyl bromide method is being studied with regard to refinements in technique. Such refinements include storage of purified chemicals away from atmospheric oxygen and moisture, and the use of samples of sodium as large as 20 grams. Successful runs have already been made on samples of this size. Reportedly, oxygen in sodium in the range of 0.001 to 0.005% has been determined by means of the Pepkowitz and Judd method.[18] Factors governing the accuracy of this method in the micro range, such as the purity of the inert gas (a heated NaK bubbler is used at KAPL) and micro titration of the sodium hydroxide, will be further studied.

A number of sodium samples in metal containers have been received from the General Electric group for oxygen analysis. The handling of these samples was discussed in previous reports.[19] A study was made of the use of decahydronaphthalene as a liquid medium in which to melt the sodium from the tube. Preliminary tests indicated that this compound rapidly absorbs oxygen from the air. Molten sodium remained bright for only 5 min before acquiring an oxide film. Further work is under way on two high-boiling paraffinic hydrocarbons, *n*-nonane and 2,2,5-trimethyl hexane. These pure hydrocarbons have the inherent advantage over high-boiling petroleum fractions such as kerosene in that troublesome variations in composition from batch to batch should not be encountered.

[18] L. P. Pepkowitz and W. C. Judd, "Determination of Sodium Monoxide in Sodium," *Anal. Chem.* 22, 1283 (1950).

[19] M. T. Kelley and C. D. Susano, *op. cit.*, p. 6-9.

DETERMINATION OF OXYGEN IN LEAD

D. L. Manning and W. K. Miller

The need for a method for the determination of small amounts of oxygen in lead has led to the investigation of the method of Funston and Reed.[20] Although this method, which involves the measurement of the reduction in volume of hydrogen when heated in contact with the sample, was developed for the determination of oxygen in bismuth, it can theoretically be adapted to lead. However, it was found that the total volume of the apparatus is so large in comparison with the small change in volume during the reaction that the method is highly inaccurate unless temperature and pressure are very accurately controlled. This was found to be extremely difficult to do even in a constant-temperature room. Very poor precision was obtained on blank runs and on samples of lead oxide.

In preference to making temperature and pressure corrections on the entire volume of gas, it was decided to design an apparatus which would allow the volume of hydrogen to be measured in the same gas buret before and after contact with the sample. A portion of this apparatus has been constructed.

DETERMINATION OF OXYGEN IN HELIUM

J. C. White and W. J. Ross

In connection with the work of the ANP Experimental Engineering group,

[20] E. S. Funston and S. A. Reed, "Determining Traces of Oxygen in Bismuth Metal," *Anal. Chem.* 23, 190 (1951).

the determination of oxygen in inert gases (principally helium) has been accomplished by a slightly modified version of the method of Brady.[21]

The procedure currently being used is to measure the volume of test gas required to produce a 5% change in optical transmittance of the reagent, sodium anthraquinone sulfonate. This change is directly proportional to the amount of oxygen present in the gas. The method is particularly well suited for oxygen concentrations of less than 25 ppm, since the total volume of test gas is of the order of 10 liters. The precision of the results is good at such oxygen concentrations but drops off sharply at higher concentrations because of the smaller test gas volumes used. This fact is illustrated by the test results listed in Table 32 which give the oxygen content of 12 helium cylinders.

A modification of the Winkler method for the determination of oxygen, as developed by Pepkowitz,[22] will be tried. The necessary apparatus is being fabricated. Present plans call for the comparison of this method with the one now in use.

TABLE 32

Oxygen Content of Unpurified Helium

CYLINDER NO.	OXYGEN (ppm) TEST NO. 1	2	3	4	5	AVERAGE
1	10					
2	12	10				11
3	3					
4	8	10				
5	120	57				89
6	14	13				13.5
7	11	17				14
8	81	130	300			170
9	20	85	70	110	54	68
10	17	13				15
11	10	11				10.5
12	12	8				10

DETERMINATION OF OXYGEN AND NITROGEN IN LITHIUM

J. C. White and W. J. Ross

A limited amount of work was carried out during this quarter on the determination of the oxygen and nitrogen content of metallic lithium by a method dependent on the selective dissolution (amalgamation) of the metal in mercury, it being anticipated that the oxides and nitrides of lithium will be insoluble and can be removed in the same manner as sodium oxide from sodium-mercury amalgam in the method of Pepkowitz and Judd for oxygen in sodium.

Unlike sodium, which amalgamates readily at (initially) room temperatures, there is little or no reaction between lithium and mercury until the temperature is raised to about the melting point of lithium. Once started by heating, amalgamation proceeds rapidly with considerable violence, accompanied by a great deal of spattering of mercury. Observations to date indicate that this step will be difficult to control and apply in an analytical procedure.

ELEMENTS OF HIGH NEUTRON-CAPTURE CROSS SECTION IN SODIUM

J. C. White and W. J. Ross

In connection with the use of sodium as a coolant, the determination

[21] L. J. Brady, "Determination of Small Amounts of Oxygen in Gases," *Anal. Chem.* 20, 1033 (1948).

[22] L. P. Pepkowitz, private communication.

of elements of high neutron-capture cross section in this metal is especially important. The elements concerned and the methods by which it is proposed to determine them are detailed in a previous report.[23] As a result of a recent conference with the Analytical Development group at KAPL, at which conference many of the methods for these determinations were discussed, significant changes in the development program for the determination of these elements have been made. These changes are outlined below.

Rare Earths - At KAPL, the rare earths are precipitated as hydroxides, Fe(III) being used as a carrier. The iron is removed by ether extraction and the rare earths are then determined spectrographically. Tests will be made of this procedure.

Carbon - The KAPL procedure depends upon wet combustion, followed by absorption of the carbon dioxide in $Ba(OH)_2$. The carbon dioxide is then determined by titration or by conductivity measurements. This method will be tried. However, it will have to be modified in order to avoid loss of carbon which may be present in the form of sodium carbide.

Cesium - Cesium, according to the KAPL procedure, is extracted from a solution of the sample by passage through a column of ion-exchange resin, IR-100. The cesium is then desorbed and determined by flame spectrophotometry.

Mercury - In the KAPL method, mercury is displaced from solution by treatment with copper powder. The mercury content of the mercury-copper amalgam is then determined by spectrographic means.

[23] M. T. Kelley and C. D. Susano, *op. cit.*, p. 4.

DETERMINATION OF METALLIC CORROSION PRODUCTS

J. C. White and W. J. Ross

Methods and techniques have been developed for the determination of metallic corrosion products, chiefly iron, nickel, chromium and molybdenum, in two reactor fuels, the ternary eutectics $NaF-KF-UF_4$ and $NaF-BeF_2-UF_4$. At present, only the $NaF-KF-UF_4$ mixture is of interest from the standpoint of corrosion studies.

Removal of Eutectic. The technique of removing the eutectic from metal sample tubes after heat treatment, which was described in previous reports,[24] has been used with success. This method has also been applied successfully to samples contained in tubes of unusually small size (1/8 in. ID) which it is necessary to use in corrosion studies in the X-10 reactor.

Spectrographic Results. The eutectic mixture was prepared for spectrographic analysis of corrosion products as described in a previous report.[25] The agreement of spectrographic and chemical results was satisfactory for iron, nickel and chromium. Molybdenum was not determined spectrographically. Since the spectrographic preparation is time consuming and the results essentially substantiate the chemical results, spectrographic tests have been discontinued.

Development of Colorimetric Methods. Methods for iron and nickel which were described in previous reports[26] have proved to be satisfactory. Difficulties encountered in the oxidation of chromium(III) to chromium(VI) have

[24] *Ibid.*, p. 2 and 18.
[25] *Ibid.*, p. 2 and 19.
[26] *Ibid.*, p. 3 and 20.

been overcome by following the procedure of Smith.[27] Essentially, the principal problem here is the reduction of chromium(VI) by hydrogen peroxide that is formed by the thermal decomposition of perchloric acid during oxidation. Peroxide formation is greatly reduced by quenching the hot flask in cold water. However, results obtained by the diphenylcarbazide color-complex method are low unless the reduced chromium(III) is reoxidized. This is accomplished by adding a few drops of 2% potassium permanganate solution and destroying the excess by addition of hydrochloric acid, followed by vigorous boiling for several minutes. Precision as between duplicate samples is of the order of ±5% for chromium within the range 100 to 20,000 ppm.

Molybdenum has not been found in most samples. However, in those few instances where molybdenum has been encountered, the thiocyanate—stannous chloride complex method has given excellent precision. Butyl acetate is used to extract the complex.

COLORIMETRIC DETERMINATION OF COBALT

J. C. White

Methods for the determination of traces of cobalt in fluoride eutectics and fused alkali metal hydroxides are being investigated. Two reagents have been tested: tetraphenylarsonium chloride and sodium diethyl-dithiocarbamate.[28] A general criticism of both reagents is a lack of sensitivity under the conditions imposed in this case, which are, primarily, the limited amount of sample available and the number of other determinations required on the same sample. The lower limit of sensitivity for these reagents is of the order of 100 ppm.

Other reagents will be tried, nitroso R salt in particular, and the procedures will be examined for possible means of improving sensitivity.

IDENTIFICATION OF RESIDUE IN LITHIUM-METAL COOLANT SYSTEM

W. K. Miller and D. L. Manning

During a period when repairs were being made on a lithium-metal coolant system, one portion of the system remained at the operating temperature of about 500°F, while an adjacent section cooled to room temperature. These conditions were maintained for a period of two weeks. Finally, after the entire system had been allowed to cool, clusters of pink, transparent crystals were found imbedded in the lithium matrix in the zone of contact between the cold and hot sections.

The crystals dissolved completely in water with a vigorous evolution of gas. This behaviour indicated that the crystals were probably lithium carbide or lithium hydride. The evolved gas was not acetylene, since it failed to react with alkaline potassium iodomercurate, and thus the possibility of its being lithium carbide was ruled out.

A few crystals were mechanically separated from the matrix as completely as possible and submitted to the Isotopes Physics Department for X-ray diffraction analysis. The sample was identified as a mixture of lithium hydride and lithium hydroxide together with, possibly, small amounts of lithium and lithium nitride. It is probable that the lithium hydroxide was formed as a result of hydrolysis at the surface

[27] G. F. Smith, *Mixed Perchloric, Sulphuric and Phosphoric Acids and Their Applications in Analysis* (2d ed.; Columbus Ohio: The G. Frederick Smith Chemical Co., 1942), p. 55.

[28] C. J. Rodden, *op. cit.*, p. 429-432.

of the exposed sample and that freshly separated crystals are almost pure lithium hydride.

Lithium hydride was determined by dissolving a sample in water and measuring the volume of hydrogen evolved. The determination was made in an apparatus designed for the determination of uranium trifluoride by the hydrogen evolution method, which is described in another section of this report. The total lithium was determined in the residual solution from the lithium hydride determination by evaporation of the solution with sulfuric acid and weighing the ignited residue as lithium sulfate. Since nitrogen was not detected in the sample by qualitative chemical tests, it may be assumed that no lithium nitride was present and that any lithium which was not accounted for as lithium hydride was present as lithium hydroxide.

Calculations based on the foregoing assumptions indicate that the approximate composition of this material is 60% lithium hydride and 45% lithium hydroxide. Since only 2.8 mg of sample was analyzed, the 5% discrepancy in totals is not surprising.

STABILITY OF BORATED WATER SOLUTIONS

H. P. House

Tests are being carried out in order to determine the composition of the most economical aqueous solution of boron salts which will provide a concentration of at least 1% of boron and which will retain its clarity indefinitely in a Portland concrete tank within which iron and Inconel assemblies are submerged.

It has been demonstrated[29] that a solution containing 176 g of potassium tetraborate ($K_2B_4O_7 \cdot 5H_2O$) per kg of water will retain its clarity at least for four weeks in the presence of concrete at ambient room temperatures. Borax, while much less expensive than potassium tetraborate, is not sufficiently soluble to produce a solution of the requisite boron concentration at ordinary room temperatures. In order to produce a borated water solution of the required stability and boron concentration at minimum cost, tests are being made of aqueous solutions of borax to which are added the minimum amount of the more expensive potassium tetraborate necessary to bring the boron concentration to 1%.

Solutions containing 53 g of borax and 36 g of potassium tetraborate per kg of water retained their clarity for three weeks under test in contact with concrete, iron, and Inconel. During the fourth week of the test, concentration effects caused by surface evaporation plus a drop in temperature, resulting from cooler weather, resulted in crystal formation. Once initiated, crystal formation continued despite the addition of water equivalent to that lost by evaporation, so that within a few days a fairly heavy deposit of crystals had accumulated.

Solutions saturated with borax at 17°C (the solution discussed in the preceding paragraph had been similarly saturated at 23°C) to which were added sufficient potassium tetraborate to bring the boron concentration to 1.14% (49.3 g of borax and 48 g of potassium tetraborate per kg of water), as well as a solution prepared by diluting the 1.14% boron solution until the boron concentration was 1.0%, are currently under test for stability when in contact with concrete, iron, and Inconel.

The cost of the boron salts for the preparation of the 1% boron solution will be of the order of 100 to

[29] H. P. House and C. D. Susano, *Clarity of Borated Water in Concrete Tanks*, Y-B31-273 (July 24, 1951).

110 dollars per 1000 gallons. This estimate is based on price quotations of 2 cents per pound for borax and 27 cents per pound for potassium tetraborate.

QUALITY CONTROL

R. L. McCutchen

The quality control work for the past quarter can be classified by laboratories as follows: Ionic Analysis Laboratories, HRE Laboratory, and X-10 Laboratories.

Ionic Analysis Laboratories. The emphasis during this period has been on the analysis of a variety of materials for uranium by means of the *l*-ascorbic acid and fluorimetric methods, and for vanadium by the hydrogen peroxide method.

To determine the accuracy and precision of the uranium and vanadium test results, appropriate control materials were tested, and the accumulated data were analyzed statistically. The findings are set forth in Table 33.

HRE Laboratory. The work of the HRE control laboratory has been principally concerned with the determination of uranium and the corrosion products, iron, nickel, and chromium, in uranyl sulfate solutions. Three different methods for determining uranium were used during the past quarter: reduction with chromous solution followed by potentiometric titration with ferrous sulfate, titration with sodium hydroxide to a potentiometric end point by means of a Precision-Dow automatic titrator (alkalimetric titration), and reduction with zinc amalgam (Jones Reductor) followed by aeration and titration with ceric sulfate solution. The degree of accuracy and precision sought, which is a 1% limit of variation from the true value, has not yet been achieved, although test results by the Jones Reductor method are improving and there is promise of further improvement (Table 34).

X-10 Laboratory. The precision and accuracy of the fluorometric and colorimetric thiocyanate methods in the two X-10 Laboratories have been very good, although it should be noted that the precision of the test results from Laboratory 3550 is consistently superior to that of Laboratory 3019 (Table 35).

In Tables 33, 34, and 35 precision is measured in terms of the limit of error of one determination or

$$L.\ E. = tS \times 100/X\ ;$$

in which t = a probability factor, taken from tables — the value is based on the number of results and the selected probability level — the 95% probability level was used in this case,

and S = estimated standard deviation, i.e.,

$$S = \sqrt{\frac{(X - \overline{X})^2}{N - 1}}\ ,$$

in which $\overline{X}$ = average $= \frac{\Sigma X}{N}$,

N = number of results,

X = individual observation, result, or determination.

Accuracy is defined as the difference between the known and average value plus or minus the confidence interval associated with the average, or, expressed in percent:

$$B \pm C.\ I. = (X - Y) \pm tS/\sqrt{N} \times 100/\overline{X},$$

Y = known value,

$C.\ I.$ = confidence interval = $tS/\sqrt{N}$,

$B = \overline{X} - Y$ (sometimes referred to as the bias).

TABLE 33

Ionic Analysis Laboratory Control Program
Third Quarter - 1951

MATERIAL	CONSTITUENT DETERMINED	METHOD	NUMBER OF RESULTS (*N*)	UNITS	KNOWN (*Y*)	AVERAGE (*X*)	STANDARD DEVIATION (*S*)	CONFIDENCE INTERVAL (*C. I.*)	PERCENT	
									PRECISION (*L. E.*)	ACCURACY (*B + C. I.*)
Uranyl			22	μg/ml	1.70	1.84	0.32	0.14	36	+7.6 ± 7.7
Nitrate	U	K-Fluorometric	22	μg/ml	6.82	7.06	0.53	0.24	16	+3.3 ± 3.3
Solution			12	μg/ml	13.6	13.5	1.5	0.95	24	-0.8 ± 7.1
Uranyl			13	mg/ml	0.341	0.346	0.025	0.015	16	+1.4 ± 4.4
Nitrate	U	*l*-Ascorbic acid	11	mg/ml	0.682	0.690	0.037	0.025	12	+1.2 ± 3.6
Solution			13	mg/ml	1.02	1.03	0.060	0.036	13	+0.9 ± 3.5
Vanadium		Hydrogen Peroxide	12	mg/ml	0.276	0.275	0.010	0.006	8	-0.4 ± 2.2
Solution	V		11	mg/ml	0.690	0.688	0.018	0.012	6	-0.2 ± 1.7
			11	mg/ml	1.38	1.38	0.049	0.033	8	0.0 ± 2.4
Carnotite Second Leach	U	Fluorometric	8	mg/*l*	*	7.6	0.7	0.6	21	*
Carnotite	U	Fluorometric	8	mg/kg	*	447	9.3	78	49	*
First Residue	V	Hydrogen Peroxide	7	mg/kg	*	4220	126	116	7	*
Carnotite	U	Fluorometric	10	mg/kg	*	71	10	7.1	32	*
Second Residue	V	Hydrogen Peroxide	9	mg/kg	*	834	94	72	26	*

*True value not known.

TABLE 34

HRE Analytical Control Program
Third Quarter - 1951

MATERIAL	CONSTITUENT DETERMINED	METHOD	NUMBER OF RESULTS (*N*)	UNITS	CONCENTRATION RANGE	PERCENT	
						PRECISION (*L. E.*)	ACCURACY (*B* ± *C. I.*)
Uranyl Sulfate Solution	Uranium	Potentiometric Titration	12	mg/ml	20 to 48	2.0	+0.3 ± 0.5
		Alkalimetric Titration	30	mg/ml	30 to 60	3.3	+1.2 ± 0.6
		Jones Reductor	164	mg/ml	30 to 60	2.7	0.0 ± 0.3
	Iron*	Colorimetric	82	μg/ml	4 to 16	25	+1 ± 6
	Nickel**	Colorimetric	124	μg/ml	2 to 9	17	+2 ± 3
	Chromium***	Colorimetric	62	μg/ml	2 to 11	48	-7 ± 6

*Colorimetric reagent, α,α'-bipyradyl.

**Colorimetric reagent, dimethylglyoxime.

***Colorimetric reagent, diphenylcarbazide.

TABLE 35

Uranium Analytical Control Program (X-10 Laboratories)
Third Quarter - 1951

CODE NO.	BLDG.	NUMBER OF RESULTS (*N*)*	URANIUM (μg/ml) KNOWN (*Y*)	AVERAGE (*X*)	STANDARD DEVIATION (*S*)	CONFIDENCE INTERVAL (*C. I.*)	PERCENT PRECISION (*L. E.*)	ACCURACY (*B* ± *C. I.*)
PART I - FLUOROMETRIC METHOD								
FX-100	3550	13	1.70	1.74	0.12	0.07	15	+2.4 ± 4.2
	3019	34		1.81	0.16	0.06	18	+6.0 ± 3.0
FX-200	3550	33	3.41	3.41	0.13	0.05	8	0.0 ± 1.3
	3019	86		3.29	0.31	0.07	18	-3.9 ± 2.0
FX-300	3550	13	4.26	4.48	0.15	0.09	7	+4.9 ± 2.0
	3019	33		4.29	0.29	0.10	14	+0.8 ± 2.4
FX-500	3550	51	6.82	6.86	0.25	0.07	7	+0.6 ± 1.0
	3019	124		6.82	0.47	0.08	14	0.0 ± 1.2
PART II - COLORIMETRIC METHOD								
CX-100	3550	18	341	345	2.9	1.4	1.8	+1.1 ± 0.4
	3019	35		339	5.5	1.9	3.2	-0.6 ± 0.6
CX-200	3550	36	384	382	3.9	1.3	2.1	-0.5 ± 0.3
	3019	79		382	7.8	1.7	4.0	-0.5 ± 0.4
CX-300	3550	18	511	511	4.8	2.4	2.0	0.0 ± 0.5
	3019	34		511	8.1	2.8	3.2	0.0 ± 0.5
CX-500	3550	56	682	683	4.7	1.2	1.3	±0.1 ± 0.2
	3019	132		682	13.1	2.2	3.8	0.0 ± 0.3
CX-600**	3550	22	273	273	3.1	1.4	2.3	0.0 ± 0.5
	3019	24		275	8.0	3.4	6.1	±0.7 ± 1.2

*One result = average of two determinations.

**Units for series CX-600 are: uranium, mg/ml.

SERVICE ANALYSES

L. J. Brady J. W. Robinson
A. E. Roemer, Jr.

ANALYTICAL SERVICES FOR THE ANP PROJECT

L. J. Brady and J. W. Robinson

Experimental Engineering. Work for the Experimental Engineering group consisted chiefly of the analysis of sodium samples for minor metallic impurities and for oxide content. No significant changes were made in the methods used in making these determinations. The addition of aluminum and magnesium to the list of impurities to be determined necessitated an added step in the chemical separation procedure; these two metals are precipitated with 8-hydroxyquinoline in an ammonical solution.

The method developed by White[1] was used to determine the oxygen content of sodium samples. An estimate of the precision being attained in the application of this method to regular samples was given in a preceding section of this report.

The analyses of a few samples of NaK which were submitted for a determination of the oxide content have not been completed. It appears, however, that with slight modification the method of White can be applied to the analysis of NaK.

Analysis of Reactor Fuels. Reactor fuels made up about two-thirds of the total number of samples analyzed for the Reactor Chemistry group during the period. These samples were derived from corrosion tests which are being conducted to determine the ability of various metals and alloys to withstand the attack of the molten eutectics of $NaF-KF-UF_4$ and of $NaF-BeF_2-UF_4$. Minor metallic components, iron, nickel, chromium, and molybdenum, were determined by colorimetric methods which were adapted to this use by the Research and Development Department.

The concentrations of these corrosion products were found to vary over a rather wide range with some samples containing less than 15 ppm of iron, nickel, or chromium, while the concentration of these same components in other reactor fuel samples was found to exceed 1%. In general, the concentration of molybdenum was rather low, that is, less than 20 ppm.

The proposed use of platinum as shielding for thermocouples to be used in contact with the molten fuel necessitated a number of tests to determine how well platinum and various welding alloys would withstand the corrosive effects of these fluoride melts. The method used for determining platinum in these samples consisted of the following steps: removal of the fluoride by the addition of boric acid and boiling in perchloric acid; extraction of the uranium with tributyl phosphate; developing the color of the chloroplatinous ion by the addition of stannous chloride to the solution after careful adjustment of the pH to 0.5, and reading the optical density of the solution at a wave length of 375 mμ. Any small particles of platinum metal which were not dissolved during the perchloric acid treatment were removed by filtration, dissolved in aqua regia, and analyzed separately.

A potentiometric titration method was used to determine the concentration of uranium in the reactor fuel

[1] J. C. White and R. Rowan, Jr., *The n-Butyl Bromide Method for the Determination of Sodium Monoxide in Sodium*, Y-B31-251 (April 24, 1951).

samples, following the removal of the fluoride by volatilization. Fluoride was determined by pyrohydrolysis of the salt with super-heated steam and subsequent titration of the hydrofluoric acid with standard sodium hydroxide solution.

A number of additional tests of reactor fuel samples, including the determination of beryllium, and of the alkali metals, were completed during this period.

Analysis of Alkali and Alkaline Earth Hydroxides. During the past quarter a great deal of interest in alkaline earth and alkali metal hydroxides has been evidenced by the Reactor Chemistry group. A number of corrosion tests have been conducted employing melts of one or more of these hydroxides in contact with a variety of metals and alloys. Metal tubes approximately ¼ in. in diameter were filled with hydroxide in a dry, inert atmosphere and the ends sealed. The tubes were then heated above the melting point of the hydroxide and allowed to remain at this temperature for an extended period. After the tubes were cooled and the hydroxide solidified, segments (1 to 4 in. in length) were removed and submitted for analysis.

The method which has been used successfully for removing reactor fuel samples from such tubes by melting the material and casting it into graphite molds cannot be employed for the hydroxide samples because the melt impregnates the graphite and cannot be contained in molds made from this material. A method which was suggested by the Research and Development Department for removing the hydroxides consists of dissolving the melt from the tube with water. Preliminary tests conducted by this group indicate that the addition of impurities resulting from the attack of the alkaline solution on the metal tube was not sufficiently high to preclude the use of this method. Precautions are taken, however, to prevent under heating of the solution while in contact with the metal, and to keep the solution from becoming saturated with the alkali, thus accelerating the attack on the metal.

After the metal tube has been removed from the aqueous solution, nitric acid is added until the hydroxide is neutralized. The undissolved residue that remains is removed by filtration and later dissolved in hot, concentrated acid or by fusion with potassium pyrosulfate and combined with the original filtrate.

The concentration of corrosion products in the hydroxide samples has been rather high in most cases, and preliminary, qualitative tests are necessary in order to predict which methods to apply in the analysis of any particular sample. Low concentrations of the corrosion products are determined colorimetrically, while conventional volumetric and gravimetric methods are employed for determining higher concentrations. Some samples have been found to contain iron and nickel in excess of 25%, and rather high concentrations of chromium are frequently encountered.

The following metallic hydroxides have been tested to date: sodium, potassium, lithium, barium, and a mixture of barium and strontium. Copper, nickel, monel, and various types of stainless steel were used as containers for the hydroxide during these tests.

It is anticipated that the number of hydroxide samples will continue to increase and that there will be even greater variation in the mixtures tested.

Determination of Iron in Beryllium Oxide. Beryllium oxide was analyzed for iron in concentrations of the order of 200 ppm by the *o*-phenanthroline colorimetric method. The samples were dissolved by refluxing them in sulfuric acid solution for 2 to 3 hr, a slight residue being fused with $K_2S_2O_7$, dissolved in sulfuric acid and added to the main filtrate. Neither the presence of beryllium nor sulfuric acid in fairly high concentrations (70 mg H_2SO_4/ml) in the solution in which the color was developed interfered with the colorimetric determination of the iron.

Determination of Fluoride by the Pyrohydrolytic Method in the Presence of Glass. The question was raised as to whether samples of UF_4 which contained considerable amounts of finely ground glass could be successfully analyzed for fluoride by the pyrohydrolytic method. This method depends on the hydrolytic action of superheated steam to liberate the fluoride completely as HF, which is collected and determined by titration. In order to determine whether the glass would prevent complete volatilization of the fluoride as HF, standardized samples of UF_4 were mixed with ground glass and analyzed by the pyrohydrolytic method. The results for fluoride were assentially the same, whether glass was included with the sample or not. Apparently, ground glass has no retarding effect on the pyrohydolysis of UF_4.

ANALYSIS OF ORES, RESIDUES, AND LEACH SOLUTIONS

Determination of Uranium in Low-Grade Ores, Residues, and Leach Solutions. In applying the modified Model R fluorometer to the determination of microgram quantities of uranium in low-grade ores, residues, and leach solutions, it has been found that the minimum quantity of uranium that can be estimated in a flux disk must exceed 0.05 μg. This minimum is imposed because of light leakage which produces a scale reading equivalent to 0.05 μg of uranium. The possibility of substituting improved filters to eliminate light leakage is being investigated. The modified fluorometer is a decided improvement over the Model R instrument, with respect to circuit stability.

The determination of uranium in Bartow clay, in which the uranium content ranges from 100 to 500 ppm, offers some difficulty. The fluorometric method is not sufficiently accurate and the conventional *l*-ascorbic acid colorimetric method, while accurate enough, requires that fairly large samples be processed in order to supply the requisite amount of uranium for an accurate determination. The processing of large samples (1 to 4 g) of a material which contains 30% P_2O_5 is time consuming and not well adapted for use with large numbers of samples.

The Development Department is exploring the possibilities of adopting a more expedient method for this determination.

Volumetric Determination of Aluminum in Leach Solutions. The determination of aluminum in leach solutions from Bartow clay by a volumetric method[2] is now being investigated. In this method, potassium fluoride is added to an aqueous aluminate solution, causing the precipitation of K_3AlF_6 with the liberation of four titratable hydroxyl ions per gram atom of aluminum, according to the following equation:

$$KAlO_2 + 6KF + 2H_2O \longrightarrow K_3AlF_6 + 4KOH.$$

[2] S. A. Hays, *The Acidimetric Determination of Aluminum with Fluoride at pH 10-11*, HW-18178 (June 1950).

TABLE 36

Comparison of Volumetric and Gravimetric Test Results for Aluminum in Leach Solutions

SAMPLE	METHOD OF ANALYSIS		DEVIATION (g/l)
	GRAVIMETRIC	VOLUMETRIC	
	ALUMINUM AS Al (g/l) (Average of duplicates)		
1	0.41	0.38	-0.03
2	0.91	0.90	-0.01
3	1.70	1.33	-0.37
4	2.02	2.29	-0.27
5	3.58	3.44	-0.14
6	6.02	5.65	-0.37
7	8.02	7.63	-0.39

The hydroxyl ion is titrated with standard hydrochloric acid to the same pH (10.5) the solution possessed before the addition of the KF. The amount of aluminum is computed from the volume of hydrochloric acid required, the equivalent weight of aluminum being one-fourth of its atomic weight.

This method offers the advantage that no separation of aluminum is required. While adequate for the present purpose, the accuracy and precision of the method are, however, not particularly good. It is indicated that results can be greatly improved by slight modifications in procedure. In Table 36, results by the volumetric method are compared with those from gravimetric determinations. Because of the high phosphate content of Bartow clay, the aluminum was determined gravimetrically as $AlPO_4$.

ANALYTICAL SERVICES FOR THE HRE PROJECT

A. F. Roemer, Jr., and J. W. Robinson

In addition to the substances listed in the preceding quarterly report, oxygen and carbon dioxide are now being determined by gas analysis; iodine by potentiometric titration, using an automatic titrimeter; cobalt, copper, manganese, molybdenum, and phosphate by colorimetric methods. The difficulty previously reported in the determination of chromium in uranyl sulfate solutions has now been overcome. Because of the greater speed afforded by the Jones Reductor—ceric sulfate titration method, it has replaced the potentiometric titration method for the determination of total uranium. Corrosion products are now being determined both in the liquid and solid phases of uranium oxide slurries as well as in uranyl sulfate and acid wash solutions.

TABLE 37

Summary of Analytical Service Work at Y-12 Site for Period June 22 Through September 7, 1951

	NO. OF PERSONNEL		ORNL DIVISIONS REQUESTING ANALYSES							OTHERS REQUESTING ANALYSES			
	TECHNICAL	NON TECHNICAL	MATERIALS CHEMISTRY	ANP	HRP	STABLE ISOTOPE	METALLURGY	ELECTROMAGNETIC	OTHER DIVISIONS	Y-12	K-25	GENERAL ELECTRIC CO.	TOTAL DETERMINATIONS
GROUP MAKING ANALYSES			NUMBER OF DETERMINATIONS										
ANP Analytical	2	5	2,129	529				100				48	2,806
HRP Analytical	1	8			10,699								10,699
Raw Materials	4	4	4,575										4,575
Metals and Alloys	2	1					106			8			114
Miscellaneous Materials	3	3	136	20		395			39	196	6		792
TOTAL	12	21	6,840	549	10,699	395	106	100	39	204	6	48	18,986

[redacted]

ANALYTICAL CHEMISTRY DIVISION QUARTERLY PROGRESS REPORT

Determination of Microgram Quantities of Fluoride. A modification of a procedure for the colorimetric determination of fluoride[3] has been adapted to the determination of fluoride in HRE corrosion test solutions. Fluoride in the range 0.1 to 4 μg/ml of solution can be determined by this method. *p*-dimethylaminoazophenylarsonic acid is the chromogenic reagent.

---

[3] G. J. Behling, E. W. Christopherson, and L. F. Kendall, *Analytical Procedures for the Plutonium Metal Fabrication Process; XI. The Determination of Fluoride*, HW-20036 (January 15, 1951).

[redacted]