MARTIN MARIETTA ENERGY SYSTEMS LIBRARIES
3 4456 0360907 6

CENTRAL RESEARCH LIBRARY
DOCUMENT COLLECTION

ORNL-1142
Physics
8a

MULTIPLE-CRYSTAL GAMMA-RAY SPECTROMETER

Checked out 1 J Krause
CENTRAL RESEARCH LIBRARY
DOCUMENT COLLECTION
LIBRARY LOAN COPY
DO NOT TRANSFER TO ANOTHER PERSON
If you wish someone else to see this document, send in name with document and the library will arrange a loan.

OAK RIDGE NATIONAL LABORATORY
OPERATED BY
CARBIDE AND CARBON CHEMICALS COMPANY
A DIVISION OF UNION CARBIDE AND CARBON CORPORATION
UCC
POST OFFICE BOX P
OAK RIDGE, TENNESSEE

ORNL-1142

This document consists of 46 pages. No. 8 of 330 copies. Series B.

Contract No. W-7405, eng 26

PHYSICS DIVISION

MULTIPLE-CRYSTAL GAMMA-RAY SPECTROMETER

F. C. Maienschein

DATE ISSUED: JUL 8 1952

OAK RIDGE NATIONAL LABORATORY
operated by
CARBIDE AND CARBON CHEMICALS COMPANY
A Division of Union Carbide and Carbon Corporation
Post Office Box P
Oak Ridge, Tennessee

MARTIN MARIETTA ENERGY SYSTEMS LIBRARIES

3 4456 0360907 6

ORNL 1142
Physics

INTERNAL DISTRIBUTION

1. G. T. Felbeck (C&CCC)
2-3. Chemistry Library
4. Physics Library
5. Biology Library
6. Health Physics Library
7. Metallurgy Library
8-9. Training School Library
10. Reactor Experimental Engineering Library
11-14. Central Files
15. C. E. Center
16. C. E. Larson
17. W. B. Humes (K-25)
18. L. B. Emlet (Y-12)
19. A. M. Weinberg
20. E. H. Taylor
21. E. D. Shipley
22. A. H. Snell
23. F. C. VonderLage
24. R. C. Briant
25. J. A. Swartout
26. S. C. Lind
27. F. L. Steahly
28. A. Hollaender
29. M. T. Kelley
30. G. H. Clewett
31. K. Z. Morgan
32. J. S. Felton
33. A. S. Householder
34. C. S. Harrill
35. C. E. Winters
36. D. S. Billington
37. D. W. Cardwell
38. E. M. King
39. E. O. Wollan
40. A. J. Miller
41. L. D. Roberts
42. R. N. Lyon
43. W. C. Koehler
44. W. K. Ergen
45. E. P. Blizard
46. M. E. Rose
47. D. D. Cowen
48. P. M. Reyling
49-73. F. C. Maienschein
74. M. J. Skinner
75. Central Files (O.P.)

EXTERNAL DISTRIBUTION

76-330. Given distribution as shown in TID-4500 under Physics category.

DISTRIBUTION PAGE TO BE REMOVED IF REPORT IS GIVEN PUBLIC DISTRIBUTION

MULTIPLE-CRYSTAL GAMMA-RAY SPECTROMETER

ABSTRACT

A multiple-crystal spectrometer has been constructed for measuring gamma-ray spectra of interest in shielding work. This instrument makes use of NaI-TlI crystals, 5819 photomultipliers, and electronic pulse height selectors. It utilizes either the Compton effect or pair production to provide a unique energy response. The sensitivity and resolution are quite adequate for shielding measurements. The sensitivity has been calibrated absolutely by comparison with a standard ionization chamber. Several spectra from radioactive sources have been included in this report as examples of the type of results that may be obtained.

TABLE OF CONTENTS

	Page
Abstract	3
Introduction	7
Equipment	9
Crystals	15
Photomultiplier Tubes	17
Electronic Components	17
Temperature Effects	21
Efficiency Calibration	23
Theoretical	23
Experimental	23
Spectral Measurements	31
Cs^{137}	31
ThC''	31
Zr^{95}	34
Po-Be	34
Conclusions	38
Appendix I - Theoretical Calculation of Efficiency	39
Appendix II - Circuit Diagrams of Electronic Components	44

TABLE OF ILLUSTRATIONS

		Page
Figure 1	Top Section of Gamma-Ray Spectrometer	10
2	Photomultiplier Tube and Crystal Arrangement (Drawing)	11
3	Photomultiplier Tube and Crystal Arrangment (Photograph)	12
4	Photograph of Lead Surrounding Spectrometer	13
5	Gamma-Ray Recoil Energies	14
6	Degraded Gamma-Ray Spectra (ThC'' Source)	16
7	Photograph of Crystals Showing Method of Canning	18
8	Block Diagram of Components	19
9	Temperature Effect on NaI-TlI Crystal with 5819 Photomultiplier	22
10	Table I, Results of Intensity Calibration	24
11	Intensity Calibration Curves	26
12	Energy Calibration	27
13	Sensitivity of Multiple-Crystal Gamma-Ray Spectrometer	28
14	Spectra Obtained with a Cs^{137} Source	32
15	Spectra Obtained with a ThC'' Source	33
16	Compton Curve of U^{235} Fission Products Approximately Six Months After Irradiation	35
17	Gamma-Ray Spectra from Two Po-Be Sources	36
18	Calculated Gamma-Ray Cross Sections for NaI	42

TABLE OF ILLUSTRATIONS (Con't)

		Page
Figure 19	Circuit Diagram of Pre-Amp and Tube Socket	45
20	Circuit Diagram of Three-Channel Coincidence Circuit	46
21	Circuit Diagram of Data Taker	47

MULTIPLE-CRYSTAL GAMMA-RAY SPECTROMETER

INTRODUCTION

This report describes the development of a spectrometer to be used for the measurement of gamma-ray spectra from the Bulk Shielding Reactor and from shielding materials surrounding it. A scintillation counter was chosen as having the best chance of successful operation.

Hofstadter,[1] Bell,[2] and others have shown that a NaI-TlI crystal with a 5819 photomultiplier tube may be used as a gamma-ray spectrometer. It was further shown by Hofstadter[3] that a unique energy response could be obtained in the low-energy region by using a second crystal to detect Compton-scattered electrons. The signal from the second photomultiplier was used to operate a gate circuit so that only pulses corresponding to Compton-recoil electrons were detected. Since the scattering angle was fixed by the chosen geometry, the incident gamma-ray energy could be determined directly from the recoil energy. If the crystal which detects the scattered gamma ray is placed in the backward direction, a rather large solid angle may be used without appreciable change in the energy of the recoil electron. Thus the sensitivity may be made large enough to be usable and a unique response will be obtained. That is, a monoenergetic gamma ray gives rise to

---

(1) J. A. McIntyre and R. Hofstadter, "Measurement of Gamma-Ray Energies with One Crystal," Phys. Rev. 78, 617 (1950).
(2) P. R. Bell, "Pair Production and Photo Electric Effect and Scintillation Phosphors," Science 112, 7 (1950).
(3) R. Hofstadter and J. A. McIntyre, "Measurement of Gamma-Ray Energies with Two Crystals in Coincidence," Phys. Rev. 78, 619 (1950).

only a single peak. It is the lack of this unique response which severely limits the use of a single crystal as a device for measuring continuous spectra.

The Compton spectrometer discussed above loses its unique response for gamma rays which are energetic enough to give rise to pair production. Annihilation quanta trip the auxiliary crystal and pass pulses corresponding to electron pairs. These, of course, occur with a different energy than the Compton-recoil peak. In order to preserve the uniqueness, it was suggested by Hofstadter and others that a third crystal be added opposite to the second. Coincidences from the two auxiliary crystals would be used to gate the electron-produced pulse. Such an instrument was developed by Johansson[4] and independently by Bair and Maienschein.[5]

The latter instrument, which led to the development of the spectrometer under consideration in this report, is discussed more completely in a NEPA report.[6]

It should be noted that the pair spectrometer differs from the Compton instrument in that the direction of the incident gamma ray need not be known in order to determine the gamma-ray energy.

---

(4) Sven A. E. Johansson, "A Scintillation Spectrometer for High Energy Gamma Rays," Nature 166, 794 (1950).

(5) J. K. Bair and F. C. Maienschein, "Three-Crystal Scintillation Spectrometer," Rev. Sci. Instr. 22, 343 (1951).

(6) J. K. Bair, F. C. Maienschein, and W. B. Baker, "Multiple-Crystal Gamma-Ray Spectroscopy Using NaI-TlI Crystals," NEPA-1701 (1951).

EQUIPMENT

Specifications of this particular spectrometer are given in several illustrations. Figure 1 is a top section showing the position of the crystals which are of the following sizes. The initial crystal, A, is a right cylinder 1 in. in diameter and 1 in. high. The auxiliary crystals B and C are right cylinders, 1.5 in. in diameter and 1.5 in. high. This section also shows the collimation which consists of a 7/8-in. hole through the 6-in. lead shield. There is additional lead in the forward direction. A removable sleeve is placed in the first 6 in. of the collimator so that it might be replaced by a solid plug. The 2-in. hole at the back of the shield allows the beam to escape without strong back scattering. The use of such a large collimating hole and the necessity of keeping crystal B close to A for reasons of intensity required that the scattering angle be large. The angle chosen, 135°, limits the Compton spectrometer energy resolution to about 20% full width at half maximum at 0.5 Mev. The only limit on the pair spectrometer is the resolution of Crystal A. Figure 2 is a side view, showing the arrangement of the photomultiplier tubes and crystals, and Fig. 3 is a photograph of this arrangement, showing in addition a "boral" box which could be used as a spectrometer housing. This box was light-tight and waterproof, as was the lead-filled container shown in Fig. 4. The shielding material used in the lead housing was about two tons of high-purity Canadian lead.

With the known average scattering angle of 135°, it is possible to calculate the Compton-scattered gamma-ray energy for any initial gamma-ray energy. A graph of such calculations is reproduced in Fig. 5. The

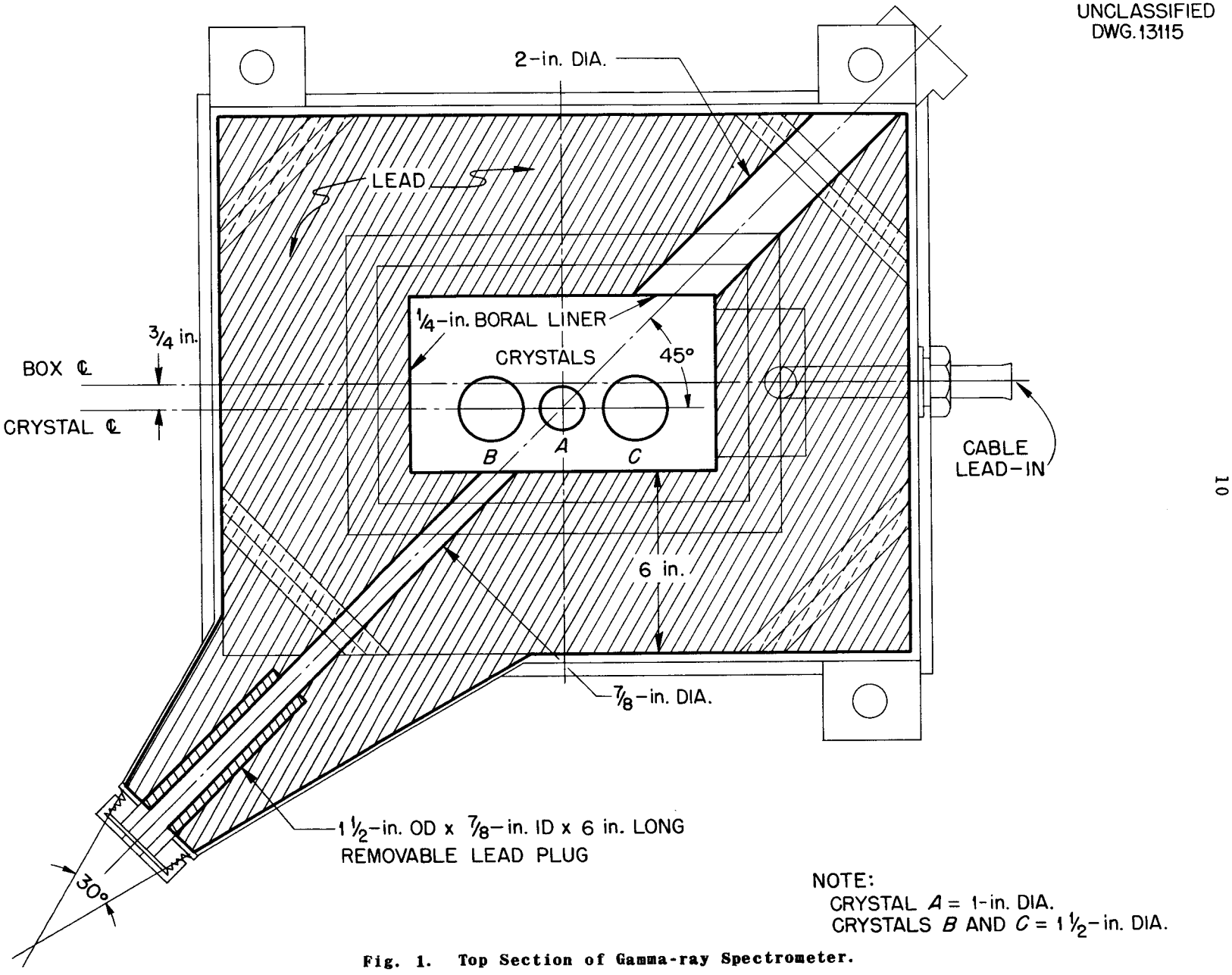

NOTE:
CRYSTAL *A* = 1-in. DIA.
CRYSTALS *B* AND *C* = 1 1/2-in. DIA.

Fig. 1. Top Section of Gamma-ray Spectrometer.

UNCLASSIFIED
DWG. 12839

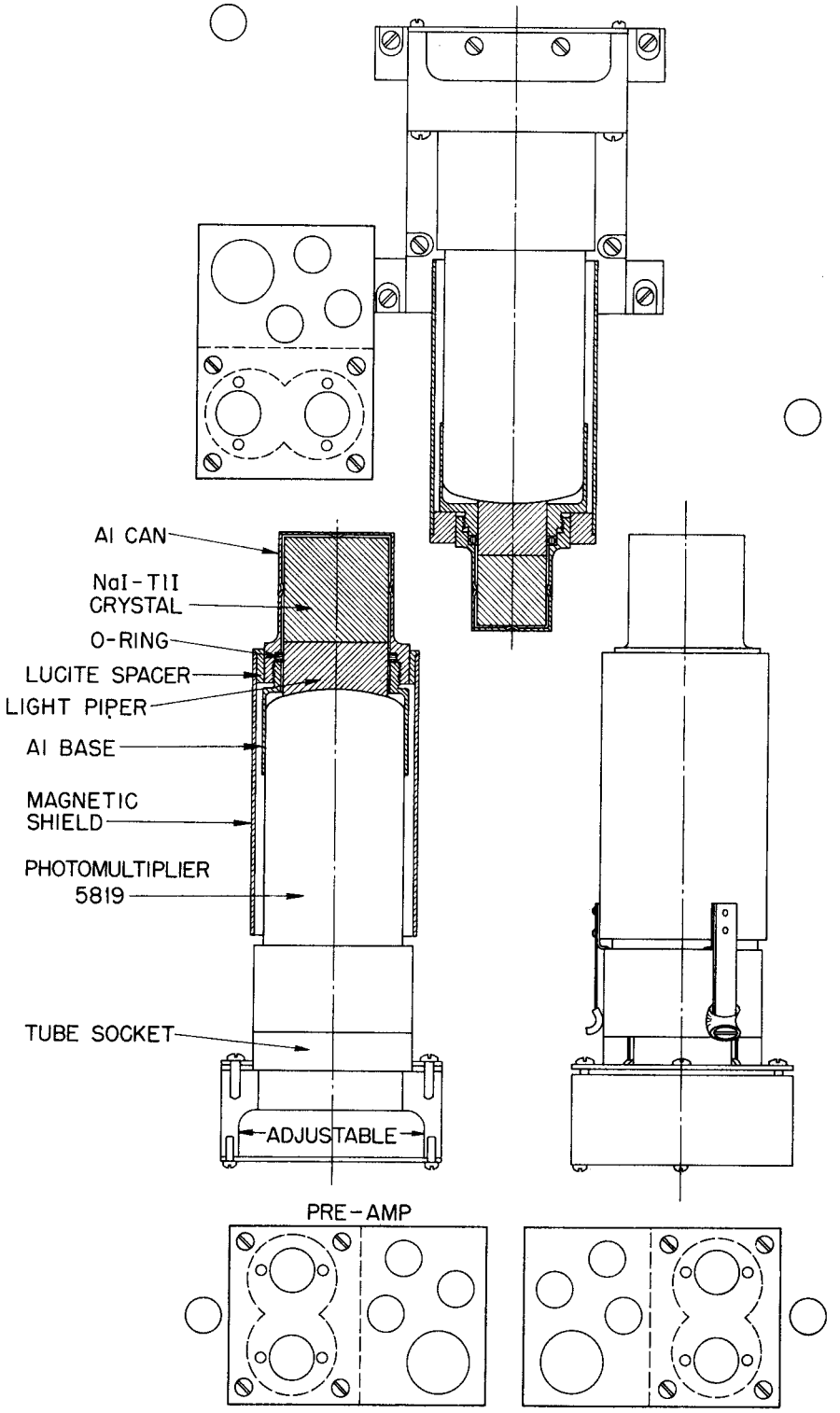

FIG. 2. PHOTOMULTIPLIER TUBE AND CRYSTAL ARRANGEMENT

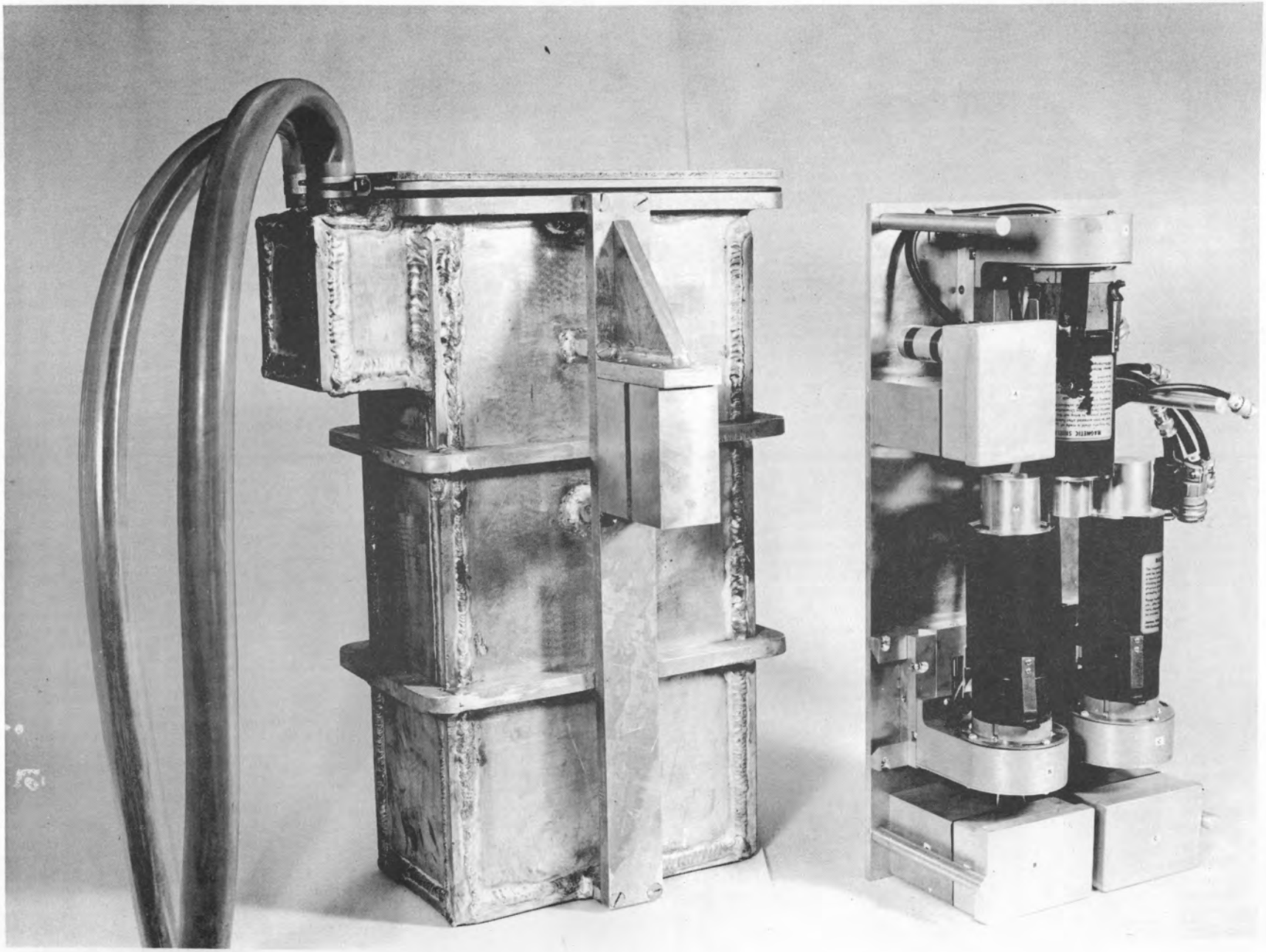

PHOTO 9096
UNCLASSIFIED

FIG. 3 PHOTOMULTIPLIER TUBE AND CRYSTAL ARRANGEMENT

PHOTO 9593
UNCLASSIFIED

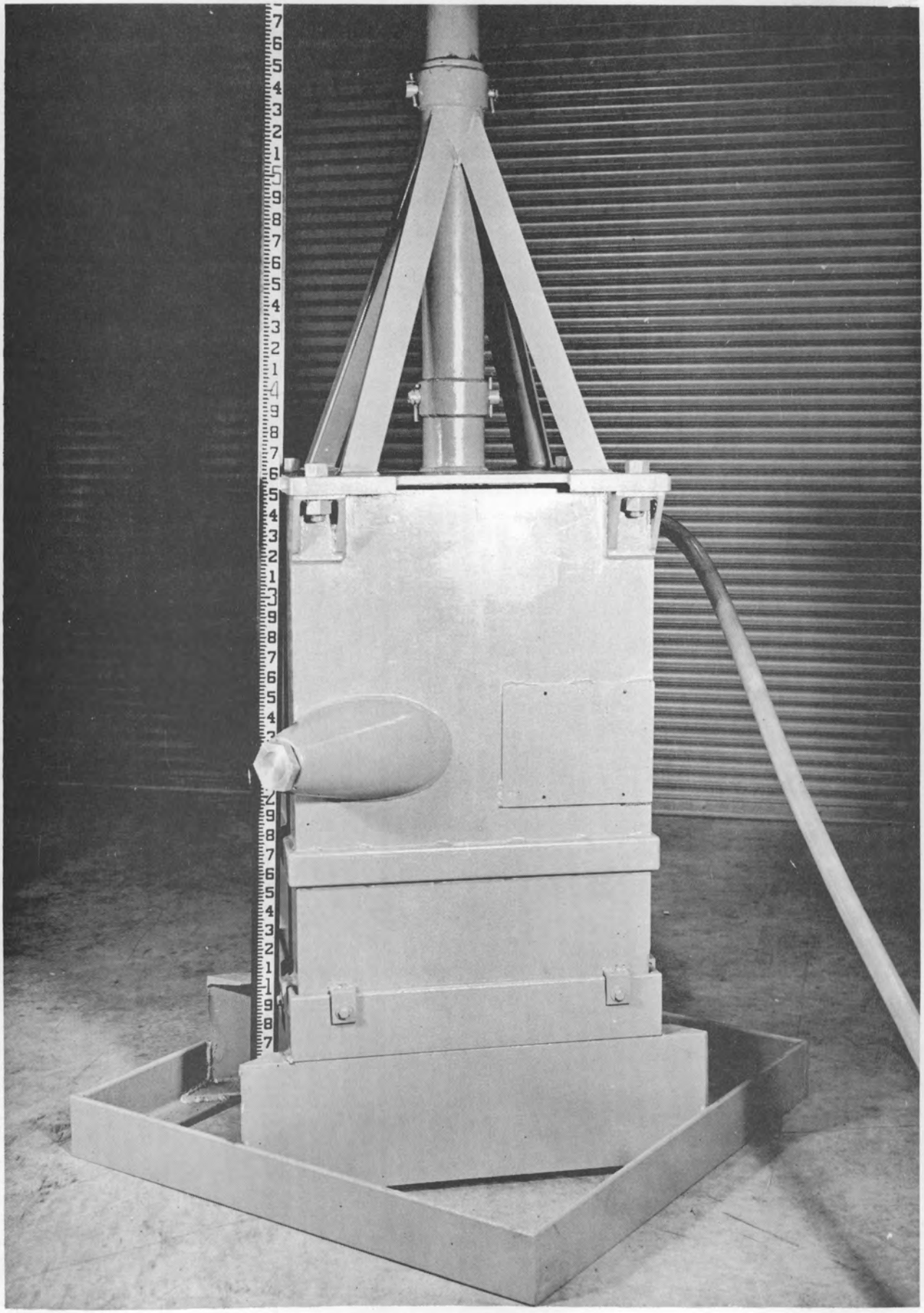

FIG. 4 SPECTROMETER HOUSING OF LEAD

UNCLASSIFIED
DWG. 13116

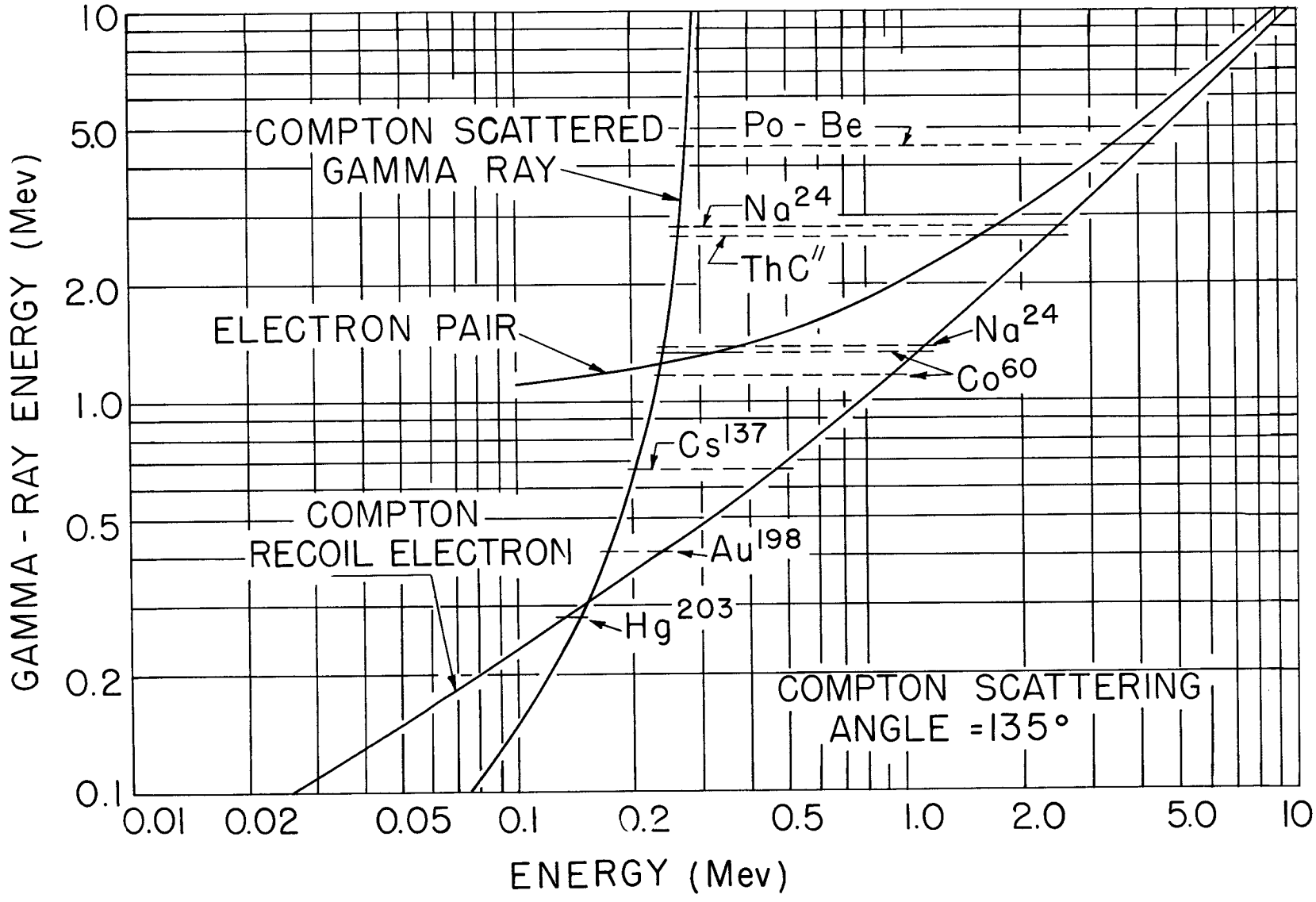

energy of an electron pair is also plotted, although this energy is just 2 m_oc^2 less than the gamma-ray energy. The dotted horizontal lines represent the energies of gamma radiation from various radioactive sources which were used for calibration purposes.

The pulse distribution obtained from crystal A will be just that of any single crystal spectrometer. However, with the collimation used, crystals B and C will respond principally to scattered radiation. All the scattered radiation which it is desired to count will have an energy $\leq m_oc^2$. Figure 6 shows the gamma-ray spectra observed in crystals B and C with ThC″ (mainly 0.59 and 2.62 Mev.) radiation incident on the initial crystal. The arrow shows how a pulse-height selector is set in order to accept only the desired pulses. It is obvious that there are few pulses outside this energy region with the point source used. However, with reactor-produced gamma radiation, the pulse height selector is necessary to reduce chance coincidences and multiple scattering events. Even 6 in. of lead is far from black to gamma rays of moderate energies but practical considerations in handling the spectrometer quickly limit the thickness of lead.

Crystals

The sodium iodide-thallium-activated crystals were all furnished cut roughly to size by the Harshaw Chemical Company. Subsequent treatment consisted of polishing in a dry box with baked polishing papers nos. 180, 240, and 600. The crystal was then optically sealed to a lucite lite-piper with Dow Corning stopcock grease and placed in an aluminum can lined with shiny aluminum foil. An air-tight seal was

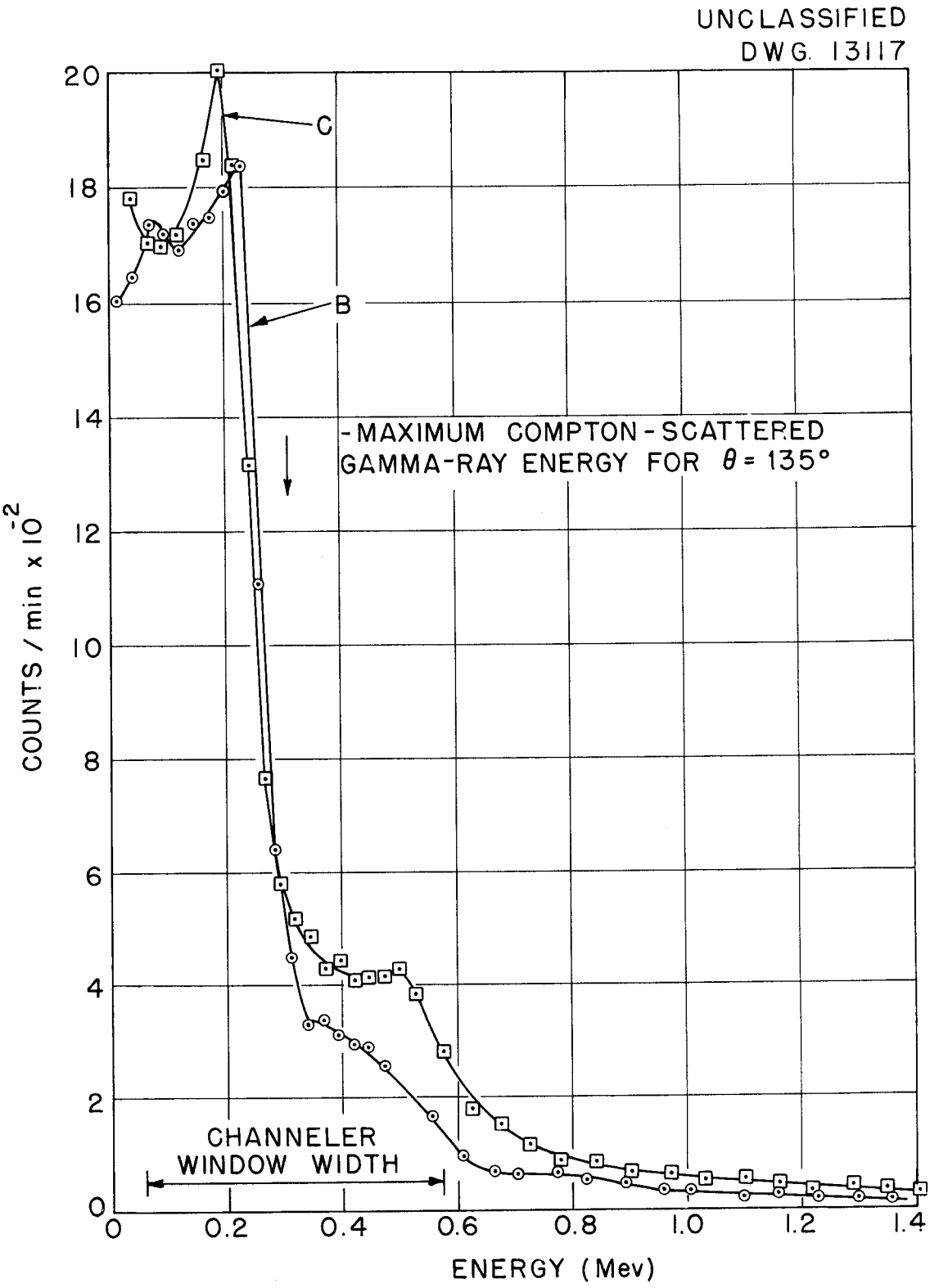

FIG. 6 DEGRADED GAMMA-RAY SPECTRA, ThC″ SOURCE

made by means of an O-ring pressing against a lite-piper as shown in Fig. 2. The lite-piper was sealed to the photomultiplier tube with more stopcock grease. Figure 7 is a photograph of the two sizes of cans and crystals. With this method of crystal canning, the resolution decreased somewhat over the first few days and then stayed approximately constant for periods up to several months. Undoubtedly, a better sealing method could be achieved, but attaining the very best resolution should not be necessary for shielding research.

Photomultiplier Tubes

Of a total of about forty 5819 photomultiplier tubes which were tested, two were far superior to all the rest. One of these was used with crystal A, which is the only tube from which the pulse height needs to be known accurately. The tests mentioned above were made with a good 1.5-in. crystal and a Cs^{137} source, the criterion of performance being the peak-to-valley ratio of the Cs^{137} photopeak. The same dynode voltages were used for all tubes since optimization of these voltages seemed to affect only the amplification of the tube and not the resolution obtained. The best peak-to-valley ratios observed were about 25 to 1, corresponding to a full width at half maximum of about 11%.

Electronic Components

Block diagrams of the two spectrometers are shown in Fig. 8. Signals from the photomultiplier tubes were modified by a pre-amp so that they might be sent through a 75-ft cable. A circuit diagram of this pre-amp is shown in Fig. 20 in Appendix II. The signals were amplified further by Atomic Model 204 B linear amplifiers which were modified by delay-line shaping the input pulses. The pulse height analyzers used(7) had the

(7) J. E. Francis, P. R. Bell and J. C. Gundlach, "Single-Channel Analyzer," Rev. Sci. Instr. 22, 133 (1951).

PHOTO 9094
UNCLASSIFIED

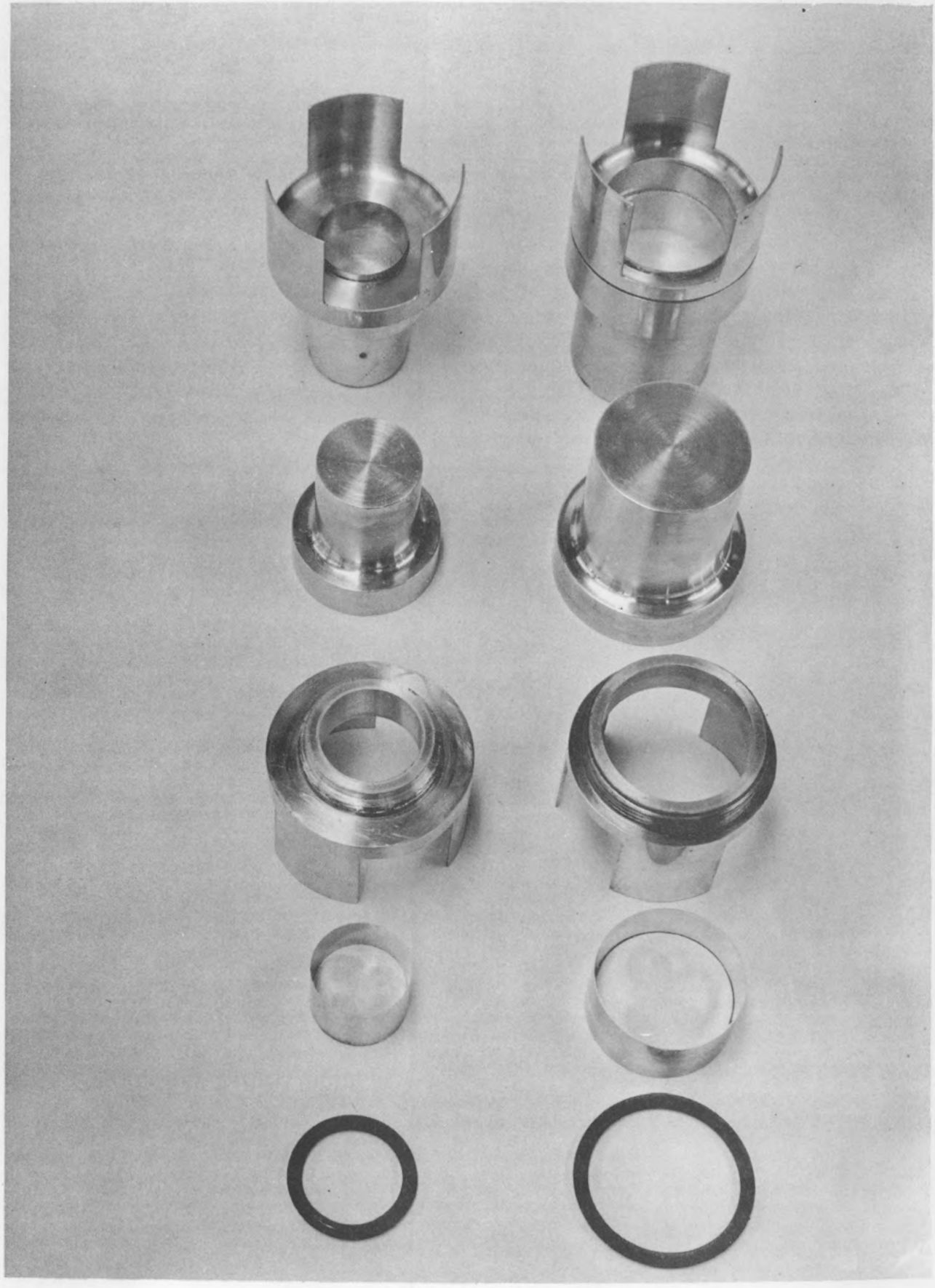

FIG. 7 CRYSTALS SHOWING METHOD OF CANNING

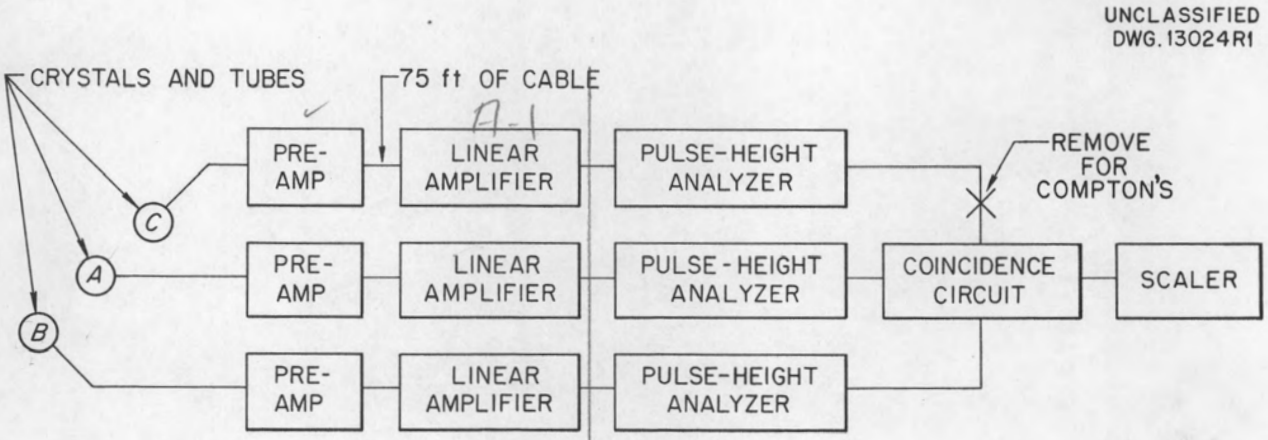

Fig. 8. Block Diagram of Electronic Equipment.

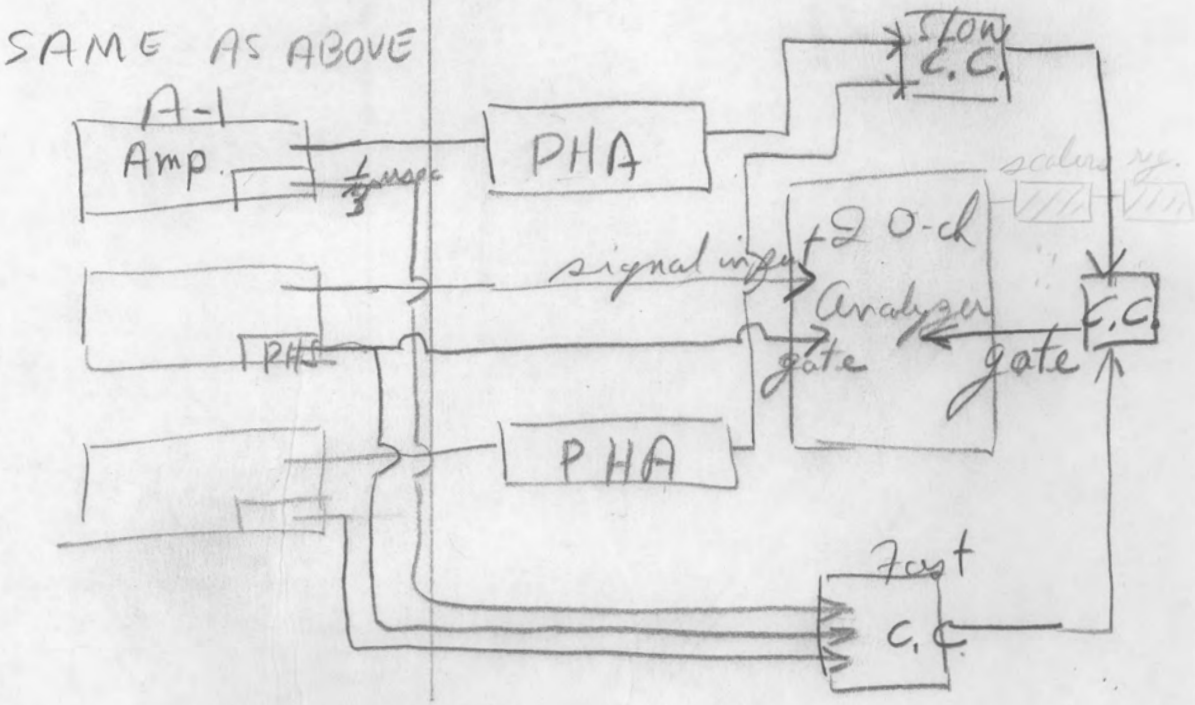

output pulse shortened in order to operate a coincidence circuit. Further, the window widths for analyzers B and C were widened from 0-10% to 0-100%.

Analysis of the pulse heights before making coincidences permits the use of a simple coincidence circuit. It also introduces an uncertainty about time delays in the analyzers. However, it appears that these are less than about 0.5 μsec and tests with various combinations of pulse heights showed that no coincidences are lost. The coincidence circuit used (Fig. 21), in addition to operating as a 2- and 3-channel coincidence circuit, could also be operated with two channels in coincidence and one in anticoincidence. This feature was not used in the present experiments. The circuit had a resolving time of $\sim$1.5 μsec. Coincidence pulses were either recorded with an Atomic 105 scaler or a simple data taker which was constructed for this purpose since no commerical units were available. This unit (Fig. 22) consisted of an Atomic 101 M scaler, modified to scale 2^n(n = 0 to 6), which stored counts on a bank of registers. Between counts a motor adjusted analyzer A. The data taker was designed by Robert G. Cochran and Keith M. Henry of the Physics Division. The high-voltage power supply used for the photomultiplier tubes has been described.(8)

---

(8) J. K. Bair and E. E. St. John, An Extremely Stable Power Supply for Scintillation Counter Use, NEPA-1265-SER-8 (Jan. 20, 1950).

TEMPERATURE EFFECTS

It has been shown repeatedly that the light pulses from NaI-TlI crystals are proportional to the energy lost by an electron in the crystal in the energy region of interest here. Therefore, by using sources of known energy, the pulse height may be calibrated in terms of energy. Due to the nature of the electronic equipment involved, such energy calibrations must be made in connection with each run. However, the over-all response must still remain constant during the run and therefore the effects of temperature on a crystal and tube were determined. The simplest solution of this problem is to place the whole apparatus in an air-conditioned room, a course which was followed with the electronic components. The 2-1/2-ton spectrometer could not always be moved into an air-conditioned room, however, so the response of a single crystal spectrometer was measured as a function of temperature. The crystal and tube were mounted in a lead brick shield which also served as an insulator and maintained a relatively constant temperature. Heat was supplied by a soldering iron, and cooling was effected with dry ice. Temperature measurements were made with a thermocouple at the crystal. The pulse heights plotted in Fig. 9 correspond to the Cs^{137} peak which was measured at each temperature. The results show that there is a very definite over-all variation in response, but fortunately the curve is relatively flat at room temperatures in Oak Ridge. With the further stabilizing effect due to the very large mass of lead, no troubles have been experienced due to temperature drifting. Before making under-water measurements, however, the spectrometer was allowed to stand for several hours in order to reach a temperature equilibrium.

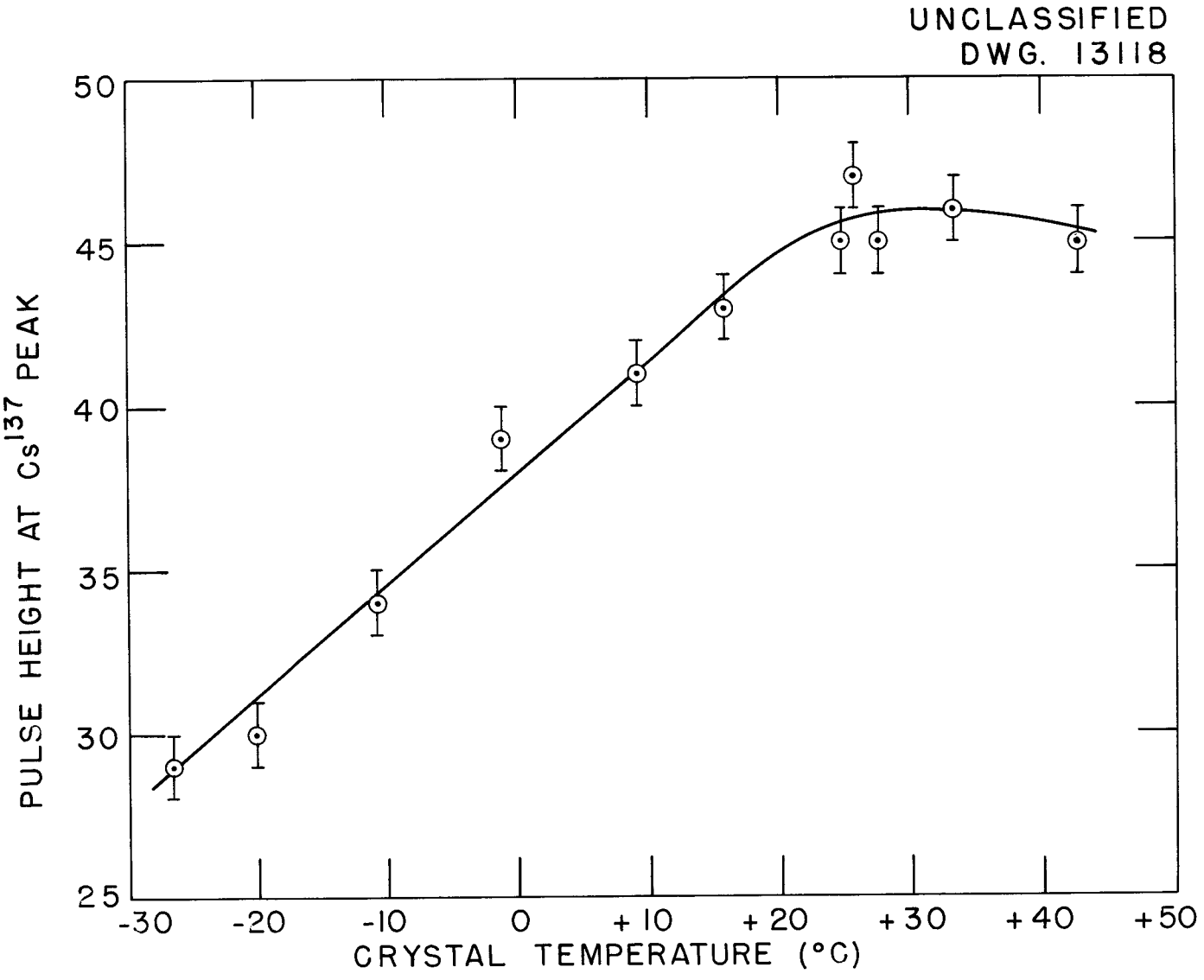

FIG. 9 TEMPERATURE EFFECT ON NaI-TlI CRYSTAL WITH 5819 PHOTOMULTIPLIER

EFFICIENCY CALIBRATION

Theoretical

Theoretical predictions of the sensitivity of both the Compton and pair spectrometers have been made by R. H. Ritchie of the Health Physics Division, ORNL. These calculations are reproduced in Appendix I of this report, and the resulting curves are plotted as solid lines in Fig. 13. Two principal assumptions were made in carrying out these calculations. One is that the primary crystal is uniformly irradiated, and two is that the distances between crystals are large compared to the crystal diameters. While the first assumption is probably a very good one, the second is far from valid. However, not making this assumption would require extensive numerical integrations which do not seem to be justified in view of other uncertainties. Errors introduced by this second assumption primarily affect the absolute magnitude of the sensitivity rather than the shape of the curve.

Experimental

Experimental determinations of the spectrometer sensitivity were made by measuring the response from sources with known decay schemes and known source strengths. The sources used are listed in column 1 of Table I, together with their gamma-ray energies in column 2. The recoil energies listed in the next column were determined from Fig. 5. The decay schemes and disintegration energies were taken from Nuclear Data.(9)

---

(9) K. Way et al., Nuclear Data, NBS Circular 499 (1950).

TABLE I (Fig. 10)

Results of Intensity Calibration

Source	E_γ Mev (γ-ray energy)	E_e Mev (Recoil Energy)	Pulse Height	Source Strength (curies)	Source Distance (meters)	Γ (γ's/cm^2/sec)	N (counts per sec)	$\frac{N}{\Gamma}$ (counts/γ'/cm^2 x 10^3)	Probable Error ±
Hg^{203}	.282	.140(Com)	4.4	.0484	13.12	58.8	0.59	10.0	1.5
Au^{198}	.411	.240(Com)	10.2	.051	13.12	90.5	0.925	10.2	1.5
Cs^{137}	.663	.456(Com)	18.0	.332	13.16	475	6.87	14.5	2.2
Co^{60}(1)	1.17	0.94(Com)	37.4	.8016	13.16	2610	25.8	9.9	1.5
(2)	1.33	1.09(Com)	42.0						
Na^{24}(1)	1.38	1.14(Com)	44.0	.0195	13.12	32.1	0.264	8.2	1.2
(2)	2.76	2.51(Com)	101	.0195	13.12	32.1	0.176	5.5	0.8
Na^{24}(2)	2.76	1.75(pr)	68.0	.0059	2.00	427	0.47	0.47	0.07
Po-Be	4.45	3.44(pr)	134	6.25×10^6 γ's/sec.	0.34	430	0.61	1.42	0.3
ThC″	2.62	1.61(pr)	61.5	-	-	-	.03N_{Com}	0.64	0.12

Source strengths of all the sources except two, which will be discussed later, were measured with a standard ionization chamber.[10] These measurements were made by J. P. Gill, Research Director's Division, ORNL. Several readings were taken with the sources of short half-life. For a determination of the disintegration rate, account was taken of the absorption of the gamma radiation in air[11], and for the lower energy sources, of the effect of internal conversion and absorption of the accompanying X-rays. The resulting source strengths are given in column 5 of Table I.

The response of the spectrometer to these sources is shown in Fig. 11 in which the counting rate is plotted as a function of pulse height. Distances from the sources are listed in column 6 of Table I. The sources were aligned accurately with the spectrometer collimator in all cases. Pulse heights of the various peaks are plotted against energies of the recoil electrons as shown in Fig. 12. It is interesting to note that a relatively straight line is obtained even though these measurements extended over a period of two weeks. In order to obtain the sensitivity curve, Fig. 13, the areas under the peaks of Fig. 11, which are listed in column 8 of Table I, were divided by the known gamma-ray flux, column 7. The resulting sensitivities are listed in column 9, together with an estimate of the experimental errors. The main contribution to the error is from the statistics in the spectral measurements.

---

(10) L. H. Ballweg and J. L. Meem, A Standard Gamma-Ray Ionization Chamber for Shielding Measurements, ORNL-1028 (1951).

(11) R. D. Evans, "Radioactivity Units and Standards," Nucleonics I, 32 (Oct. 1947).

UNCLASSIFIED
DWG. 13119

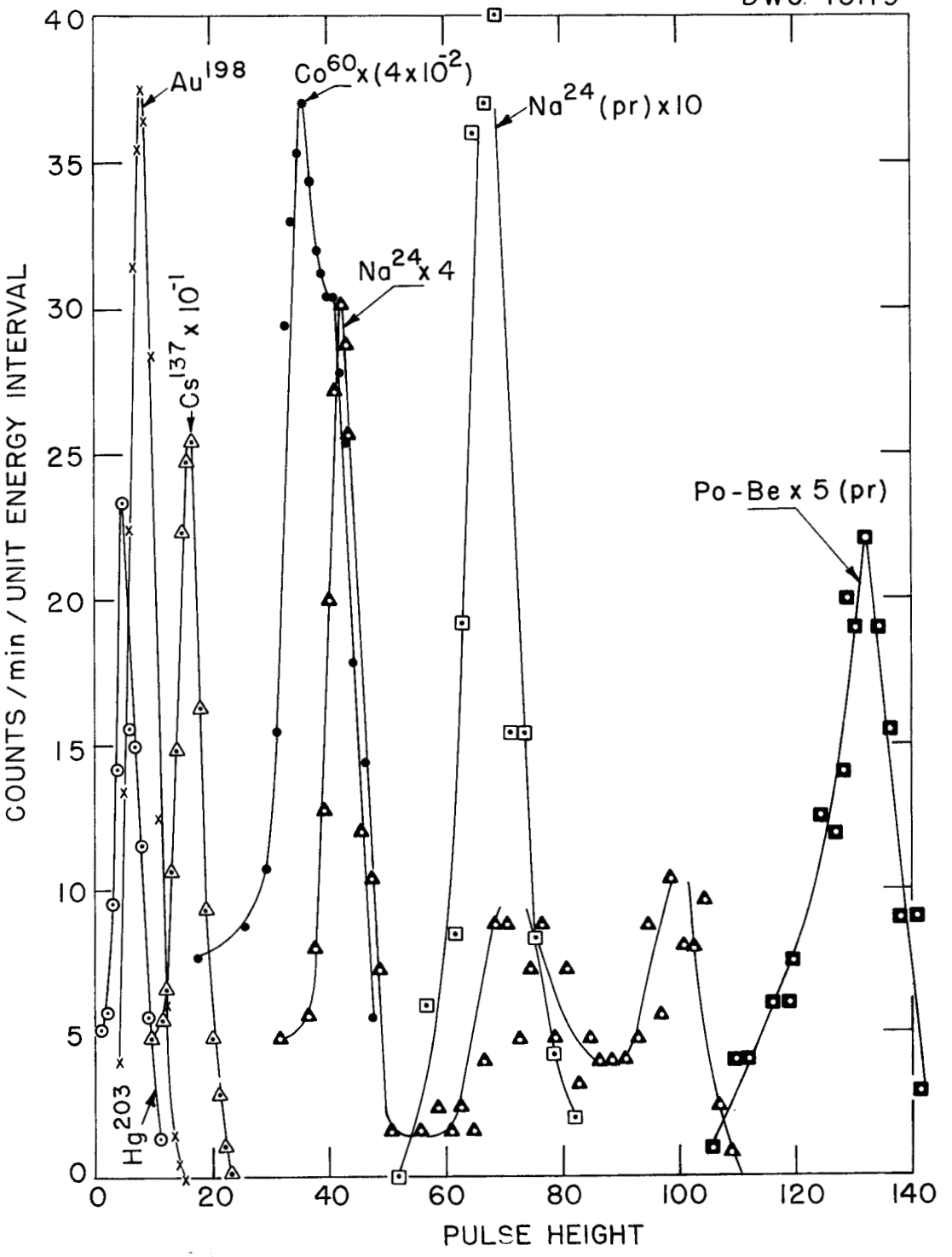

INTENSITY CALIBRATION CURVES

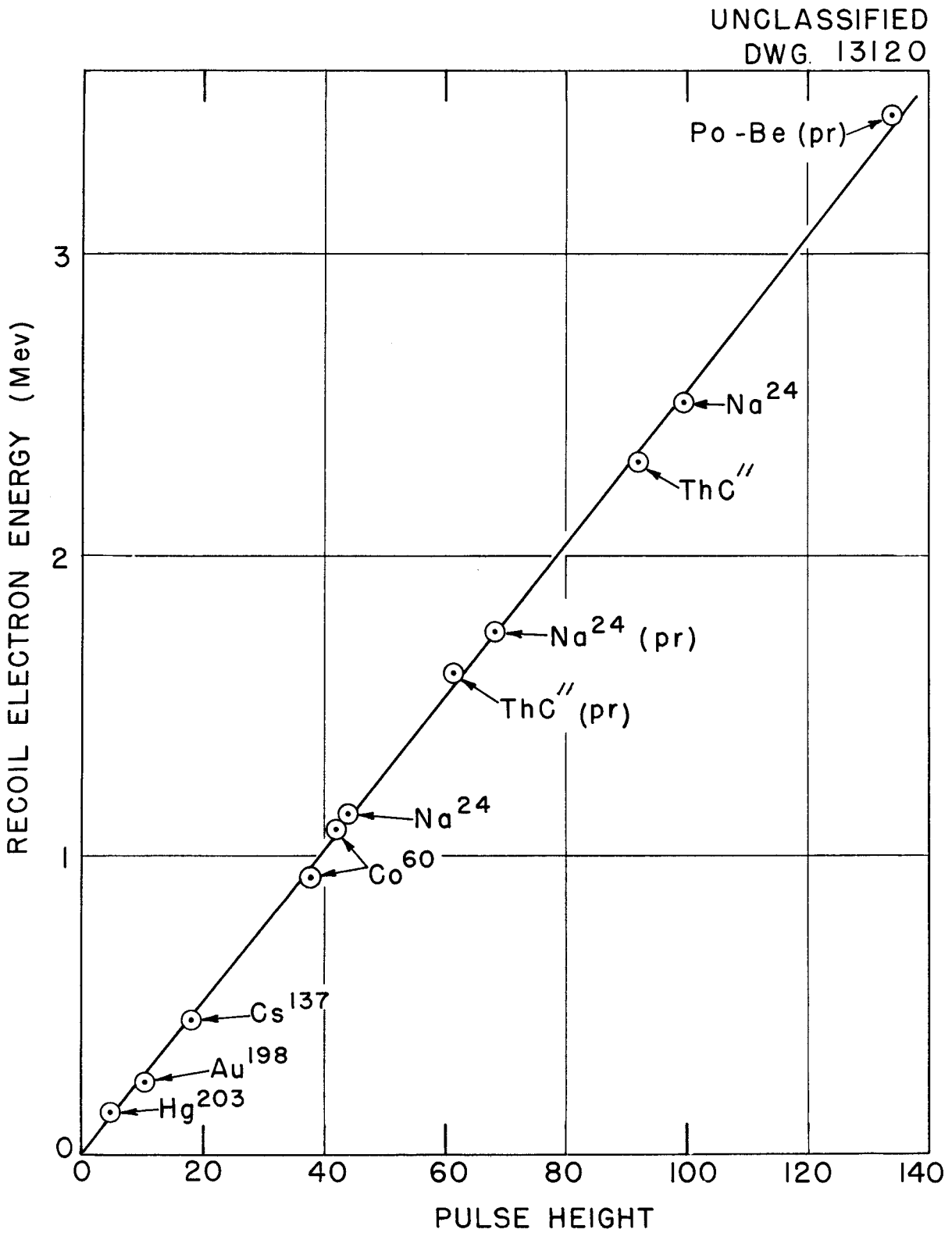

FIG. 12 ENERGY CALIBRATION

UNCLASSIFIED
DWG. 13121

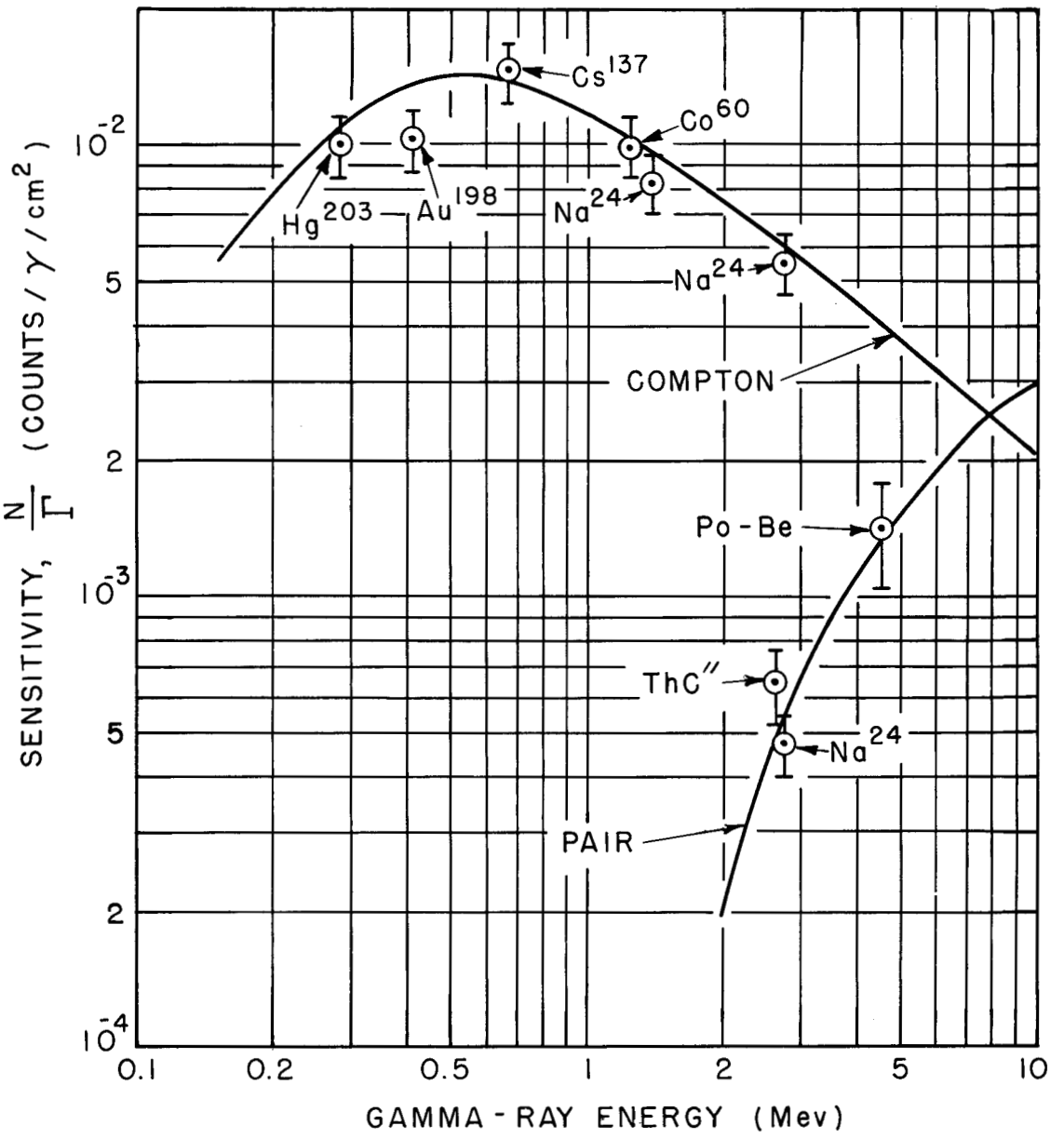

FIG. 13 SENSITIVITY OF MULTIPLE-CRYSTAL GAMMA-RAY SPECTROMETER

The pulse height determinations should be accurate within 5%. The sources above the horizontal line in Table I, which were used in the above manner, give a good definition of the Compton sensitivity curve over the energy region of interest. The experimental points give approximately the same shape and also the same absolute value as the theoretical curve. For the pair curve, however, only one point at 2.76 Mev. was available and this also agreed within the errors involved. Another point at 2.62 Mev. was obtained using a ThC″ source. This source could not be calibrated absolutely because of an unknown decay scheme, but a ratio of the pair-to-Compton counting rates was determined. Then if the Compton sensitivity is taken from the curve, a point on the pair sensitivity curve may be obtained.

It was very desirable to extend the pair calibration to higher energies, but no radioactive sources of usable half-life emit appreciable numbers of gamma rays more energetic than Na^{24} (2.76 Mev.). However, gamma rays from an excited state of C^{12} may be produced with a Po-Be neutron source. The most prominent gamma ray (4.45 Mev.) may be easily

$$Be^{9} \quad (\alpha,n)\ C^{12*} \quad , \quad C^{12*} \longrightarrow C^{12} + \gamma$$

measured, as seen in Fig. 11. The existence of other gamma rays is highly questionable[12] because of interference of capture gamma rays and low intensity. In any event, other gamma rays account for less than

(12) J. Terrell, "Gamma-Rays from $Be^{9}(2,n)$," Phys. Rev. 80, 1076 (1950); P. R. Bell and W. H. Jordan, "Gamma-Rays from Po-Be Neutron Source and the Excited State of C^{12}," Phys. Rev. 79, 392 (1950).

10% of the disintegrations. For determining the pair sensitivity, an estimate of the number of 4.45-Mev. gamma rays per neutron was used. The only available data is that of Roberts,[13] who measured relative intensities of neutrons leading to the ground state and 4.45-Mev. level in two directions, 0° and 180°. Since nothing else is known about the angular distribution of this reaction and the values at 0 and 180° were equal, this branching ratio (63% to 4.45 Mev. level) was used. This agrees closely with a value used by Terrell[12] who does not indicate its derivation. The neutron source strengths of Po-Be sources are determined by comparison with a standard source with a long counter. The use of these values then gave the gamma-ray intensity of the Po-Be source and thus another point on the pair sensitivity curve which also agreed with the theoretical curve well within the assumed limits of error. (Also see discussion of the Po-Be gamma-ray spectrum on page 34.)

Because of the rather surprisingly close agreement of the experimental and theoretical sensitivities over the energy interval which is available experimentally, it is considered justifiable to use the theoretical expression as an extrapolation to higher energies.

---

(13) J. H. Roberts and W. H. Guier, "Energy Levels in C^{12} from Be^{9} $(\alpha,n)C^{12}$," Phys. Rev. 81, 317 (1951); also J. H. Roberts, private communication to J. K. Bair.

SPECTRAL MEASUREMENTS

The following spectral measurements are included not as examples of measurements for which the spectrometer was designed, but rather to illustrate the spectrometer's performance.

Cs^{137}

Results obtained with a Cs^{137} source are shown in Fig. 14. The counting rates on the curves have no absolute significance and were measured with a very poor crystal, but the curves serve to illustrate the relative importance of the peaks for a single-crystal and a two-crystal Compton spectrometer. With the single crystal, both the photopeaks and Compton peaks are observed, while with the Compton spectrometer, the single peak, corresponding to gamma rays scattered through approximately 135° is observed.

ThC″

In Fig. 15 results obtained with the single, double, and triple-crystal spectrometers are shown. The source used was ThC″ , which emits a strong gamma ray of 2.62 Mev. It is seen that the three peaks obtained with the single-crystal spectrometer are rather poorly defined while the peak observed with the Compton spectrometer is much more prominent. At this energy, however, pair production gives rise to an appreciable background in the Compton spectrometer. If pair-produced triple coincidences are observed, as in the bottom curve, only a single peak, with very little background, results. Since all of these measurements were made with the same source, the curves show the reduction in counting rate in going to two- or three-fold coincidences. It should be noted that Fig. 15 is plotted on five-cycle semi-log paper and thus the shapes of the observed peaks differ from the more usual plots on linear paper.

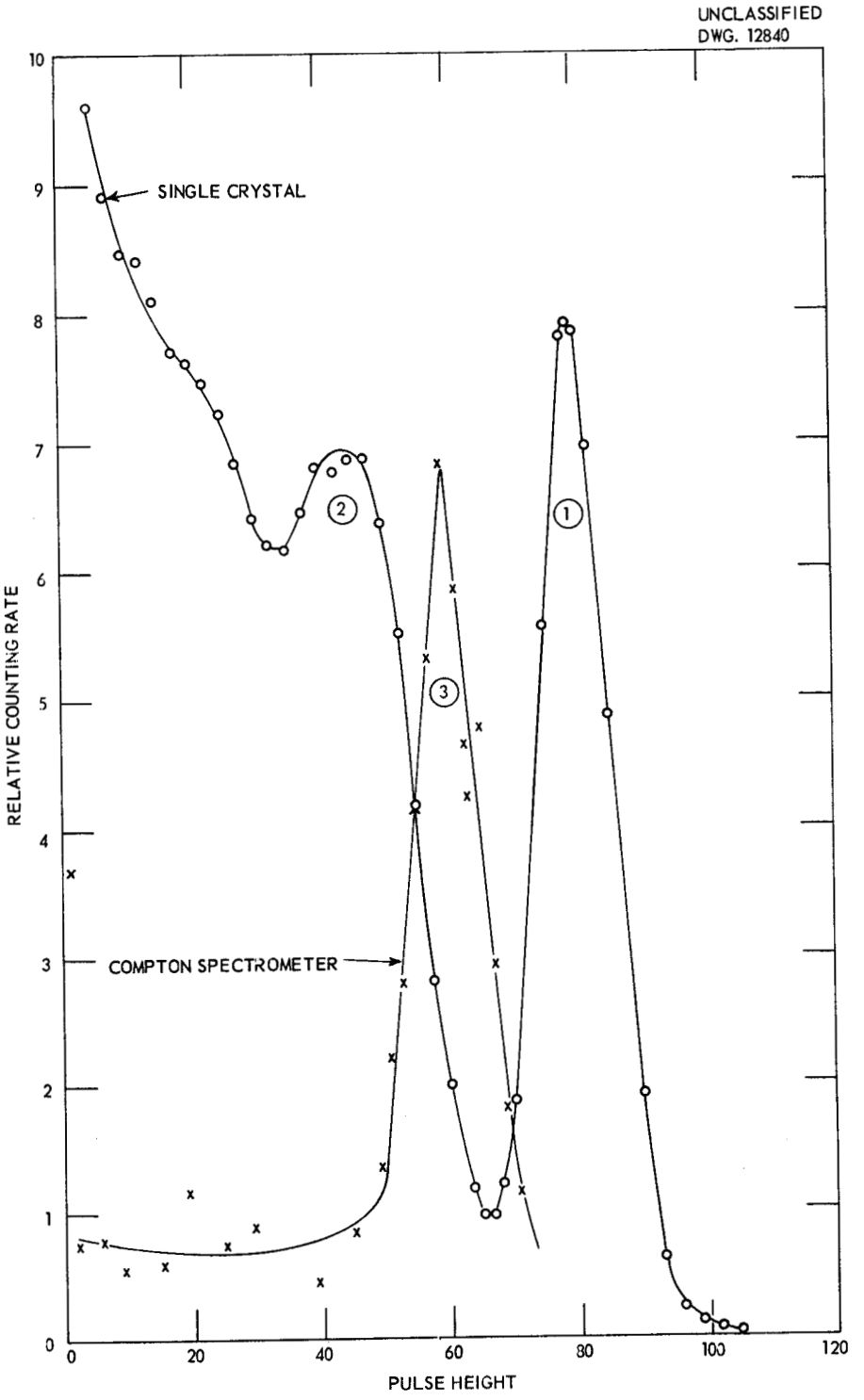

FIG. 14 SPECTRA OBTAINED WITH A Cs^{137} SOURCE

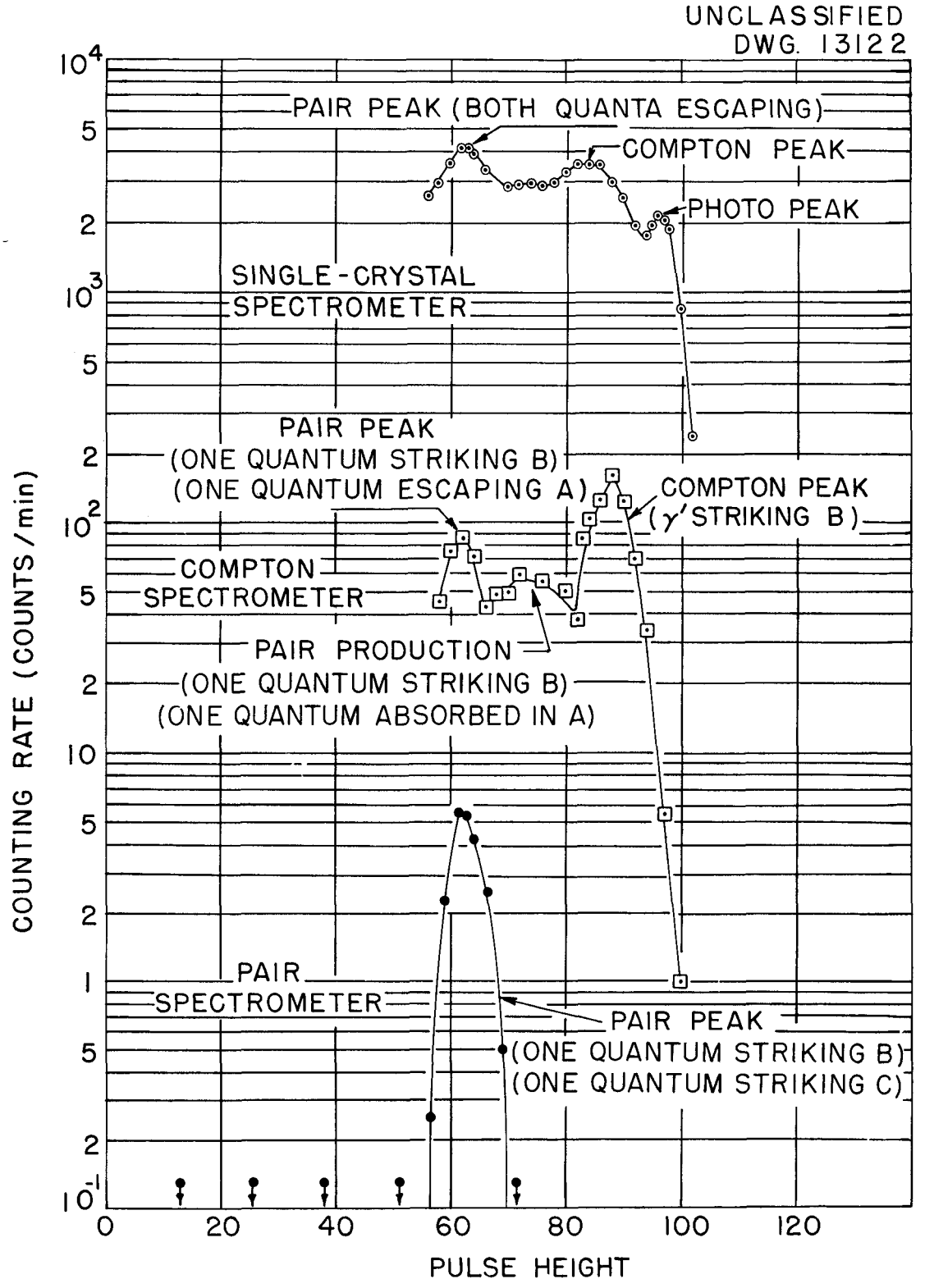

FIG. 15 SPECTRA OBTAINED WITH A 1 mC ThC″ SOURCE

Zr^{95}

Since a sample of U^{235} was available which had been irradiated with neutrons six months previously, the gamma-ray spectrum was examined. The results, which were surprisingly simple, show a single prominent peak at 0.72 Mev. (see Fig. 16). This is most likely due to 65-day Zr^{95} (E_γ = 0.71 Mev.) which would be in equilibrium with its daughter, 35-day Nb^{95} (E_γ = 0.76 Mev.). The two gamma rays would not be separated with the 16% resolution available at this energy.

Po-Be

The gamma-ray spectrum emitted by a Po-Be source is of interest not only from the point of view of intensity calibration (see page 30) but also because the spectrum itself is still in question. Of the three gamma-ray energies (2.7, 4.5 and 7.0 Mev.) listed by Bothe[14] and Dzelepov,[15] one (at 4.5 Mev.) has been repeatedly confirmed,[12] and the prominent peaks in Fig. 17 correspond to this gamma ray. Terrell's results[12] with a 180° focusing pair spectrometer indicate that the 7.0-Mev. gamma ray cannot be present with an abundance > 0.5% of that of the 4.5-Mev. gamma ray. However, the sensitivity of the 180° spectrometer was quite low in the region of 2.7 Mev. and little could be said about the existence of this gamma ray.

---

(14) W. Bothe, "Kernspektren Einiger Leichter Atome," Zeits. f. Physik. 100, 273 (1936)

(15) B. S. Dzelepov, "New Method of Measuring the Energy of Hard Gamma Rays," Comptes Rendus, U.R.S.S. 23, No. 1, 24 (1939).

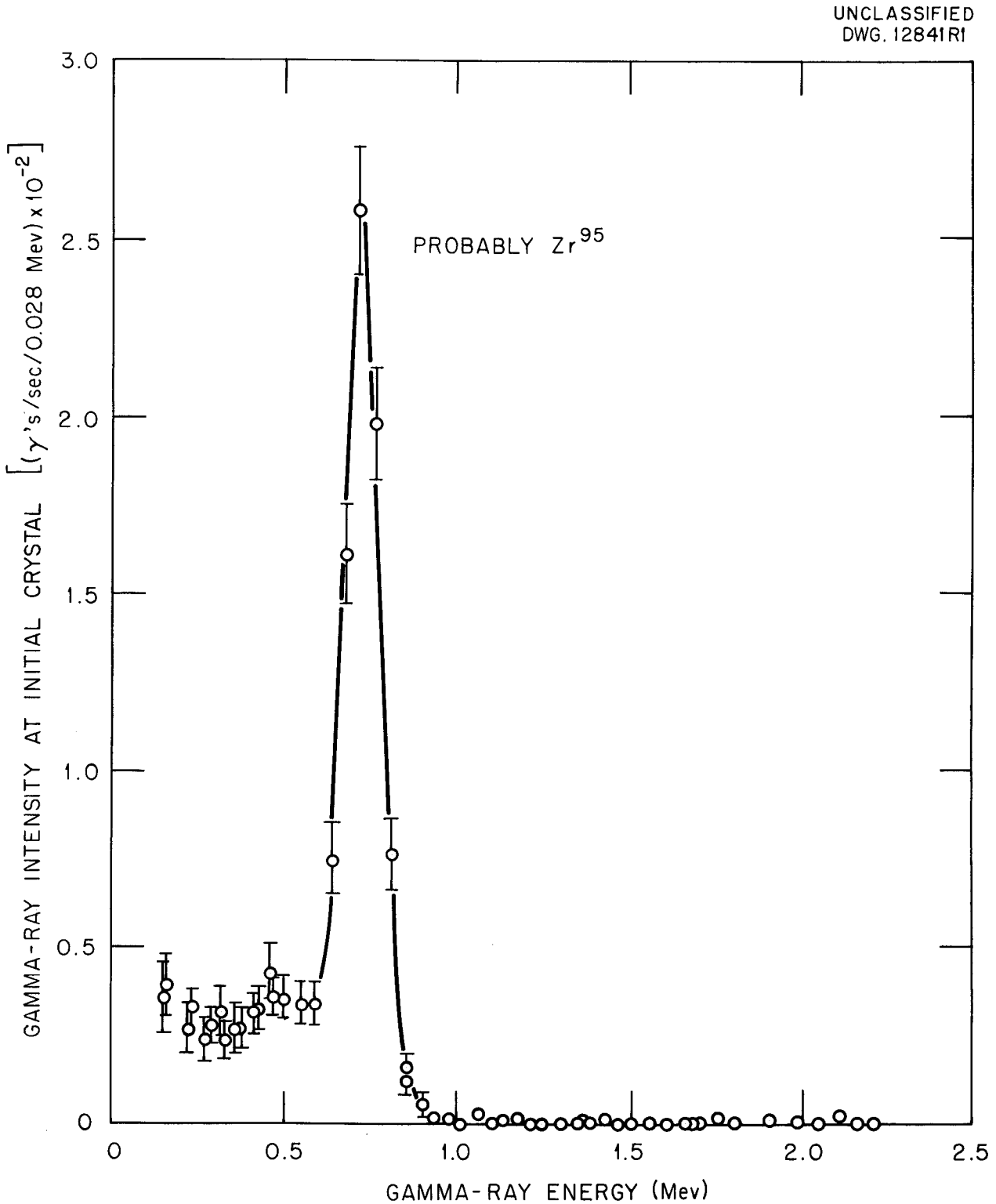

Fig. 16. Compton Curve of Uranium^{235} Fission Products Approximately Nine Months After Irradiation.

UNCLASSIFIED
DWG. 13026R1

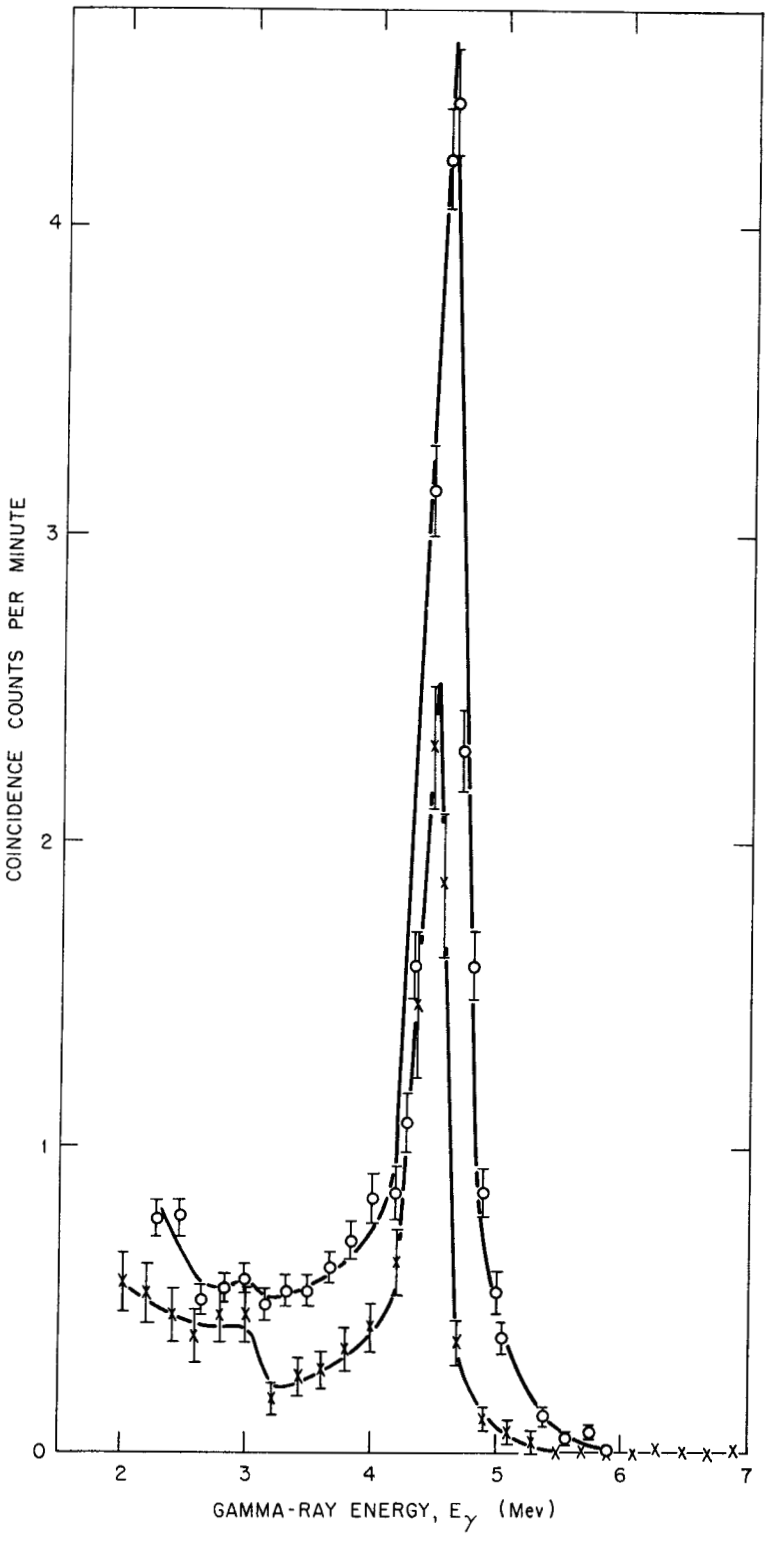

Fig. 17. Polonium-Beryllium Pair Spectrum.

The two curves in Fig. 17 show that a gamma ray at 2.7 Mev. must be less than 10% as abundant as the 4.5-Mev. gamma ray. A clearer conclusion cannot be reached because of the presence of a background in this energy region. This background is presumably due to cross-crystal scattering since it is usually present to some extent in all measurements and decreases with decreasing count rate. The background counts are not due to three-fold chance coincidences, but some counts might be due to two-fold chance coincidences combined with cross-crystal scattering. Other calculations by R. H. Ritchie have shown that these lower energy pulses are not due to negative electrons escaping from the initial crystal or to loss of energy as bremssthrahlung. It was not practical to reduce the counting rate in this experiment since one of the two spectral runs in Fig. 17 required about 120 hr.

These two runs were made with two different sources. The top curve used a ~0.1-curie source at a distance of ~2 in. from the initial crystal, while the bottom run was made with a ~1.5-curie source at ~1 ft from the initial crystal. The source strengths listed, of course, pertain to alpha emission rather than gamma rays. The larger source capsule was enclosed in an aluminum container ~1/8 in. thick, while both sources were contained in the usual nickel capsule. The photomultiplier and crystal were mounted in the 1/4-in. thick "boral" box. There was no hydrogen in the immediate vicinity of the experimental setup. Neutrons from the source did induce activities in the crystal, but these produced only a small fraction of the counting shown on the graph.

CONCLUSIONS

A multiple-crystal scintillation spectrometer has been developed which has an essentially unique response to monochromatic gamma rays. It has been tested with several radioactive sources and appears to be capable of measuring gamma-ray spectra from the Bulk Shielding Reactor and from shield samples. The spectrometer utilizes the Compton effect with a resolution of $\sim$17% at 0.7 Mev. and a sensitivity of 1.4×10^{-2} cts/γ/cm^2 at this energy. As a pair spectrometer the resolution decreases to 7% at 6 Mev. with a sensitivity of 2×10^{-3} cts/γ/cm^2. The pair sensitivity at 2 Mev. is 2×10^{-4} cts/γ/cm^2.

APPENDIX 1

Theoretical Calculation of Efficiency - R. H. Ritchie, Health Physics Division, ORNL

η_1 - Probability of penetration into the primary crystal and emergence after scatter.

η_2 - Probability of capture of gamma in secondary crystal.

$\Delta\Omega$ - Solid angle subtended by secondary crystal at the center of the primary crystal (steradians).

γ - Primary gamma ray or its energy in m_0c^2 units.

γ' - Secondary gamma ray or its energy in m_0c^2 units.

R_1 - radius of primary crystal (1 in.).

R_2 - radius of secondary crystal (1-1/2 in.).

$$N_0/_{Compton} = V\, n\left(\frac{d\sigma}{d\Omega}\right)_{135^\circ} \Gamma\, \Delta\Omega.$$

$$N_0/_{pair} = V\, \tau/4\pi\, \Gamma\, \Delta\Omega.$$

Γ - gamma-ray flux (photons/cm^2/sec).

V - effective volume of crystal (cm^3).

$n\left(\frac{d\sigma}{d\Omega}\right)_{135^\circ}$ = cross section for Compton scattering through 135° (cm^{-1}).

τ = cross section for pair production (cm^{-1}).

N = number of counts recorded = $\eta_1\ \eta_2\ N_0$.

$\mu(\gamma)$ = total gamma cross section of NaI for energy γ (cm^{-1}).

$\mu(\gamma')$ = total gamma cross section of NaI for energy γ' (cm^{-1}).

Compton Scattering - Efficiency

Assumptions

1) All primary gammas are assumed parallel and secondaries are assumed to leave the crystal in parallel paths.

2) The primary crystal is assumed to be uniformly irradiated with primary gammas.

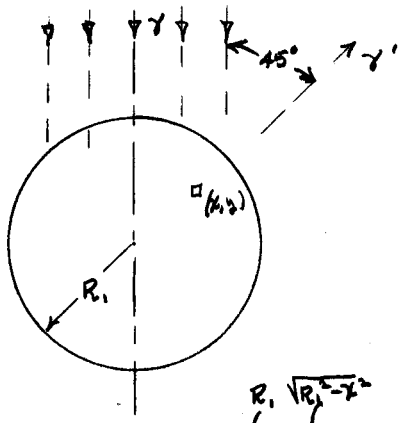

The over-all probability of penetrating and emerging from the primary crystal is:

$$\eta_1 = \frac{2}{\pi R_1^2} \int_0^{R_1} dx \int_{-\sqrt{R_1^2-x^2}}^{\sqrt{R_1^2-x^2}} dy \, \exp\left\{-\mu(\gamma)\left[\sqrt{R_1^2-x^2}-y\right] - \mu(\gamma')\left[\sqrt{R_1^2+(y-x)^2+\sqrt{2}(y-x)}-\sqrt{2}y\right]\right\} .$$

This integral could be evaluated by numerical means. This does not seem to be justified in view of the other approximations which have been made.

To simplify the problem we assume that the secondary is scattered through 180°. This assumption is made only in calculating η_1.

Then:

$$\eta_1 = \frac{2}{\pi R_1^2} \int_0^{R_1} dy \int_{-\sqrt{R_1^2-y^2}}^{\sqrt{R_1^2-y^2}} \exp\left\{-\left[\mu(\gamma)+\mu(\gamma')\right]\left[\sqrt{R_1^2-y^2}-x\right]\right\} dx$$

$$\eta_1 = \frac{4}{\pi}\left\{\frac{1-\Phi'\left(2R_1\left[\mu(\gamma)+\mu(\gamma')\right]\right)}{2R_1\left[\mu(\gamma)+\mu(\gamma')\right]}\right\},$$

where Φ' is a function tabulated by Müller.(16)

The probability that the degraded gammas interact in the secondary crystal, if we assume that they travel in parallel paths, is

$$\eta_2 = \left\{1-\Phi'\left(2R_2\mu(\gamma')\right)\right\}.$$

The total double coincidence counting rate is:

$$N = \eta_1\eta_2 N_0/\text{Compton} = \eta_1\eta_2 n\left(\frac{d\sigma}{d\Omega}\right)_{135°} \Delta\Omega V \Gamma .$$

Values of the cross section are taken from Fig. 18 which was calculated by D. S. Hughes, summer participant from the University of Texas. An estimate of the solid angle gives $V\,\Delta\Omega = 1.79 \times 10^{-2}$ cm^3. The sensitivity, $\frac{N}{\Gamma}$, may now be determined and is plotted as the solid line in Fig. 13.

---

(16) R. Müller, "Über die zahlenmassige Beherrschung und Anwendung einiger den Besselschen verwandten Funktionen nebst Bemerkungen zum Gebiet der Besselfunktionen," Zeit. Angew. Math. 19, 36 (1939).

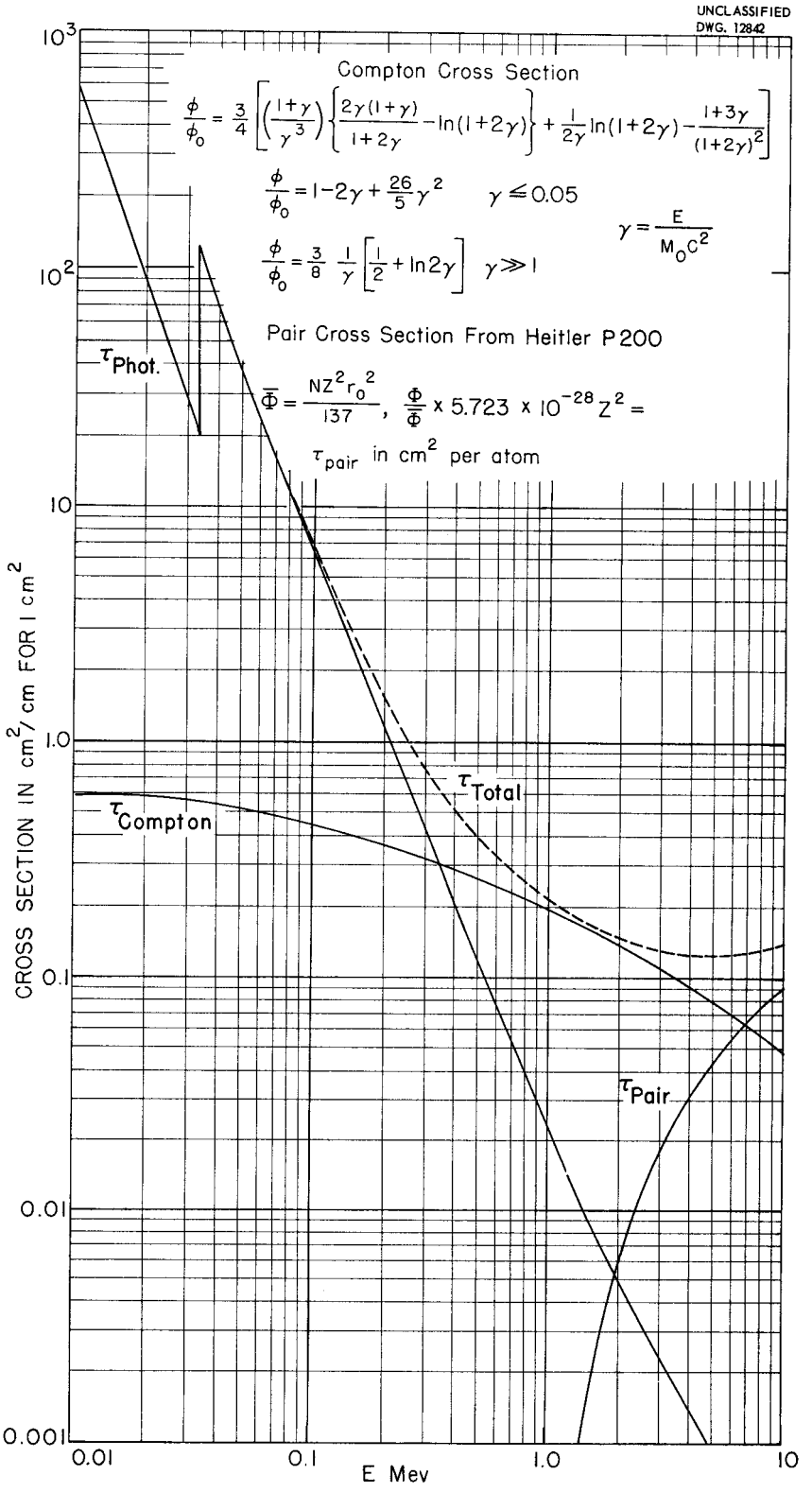

FIG. 18 CALCULATED GAMMA-RAY CROSS-SECTIONS FOR NaI

Pair Production - Efficiency

Assumptions

1) All angular detail is neglected.

2) Primary crystal is assumed to be uniformly irradiated.

3) Travel of the positron in the crystal from the point of formation to the point of annihilation is neglected.

$$\eta_1 = \int_0^{R_1} dx \int_{-\sqrt{R_1^2-x^2}}^{\sqrt{R_1^2-x^2}} \exp\left\{ -\left[\mu(\gamma) + 2\mu(\gamma')\right]\sqrt{R_1^2-x^2} + \mu(\gamma)\, y \right\}$$

$$= \frac{2}{\pi \mu(\gamma) R_1} \left\{ \Phi'(2\mu(\gamma')R_1) - \Phi'(2R_1[\mu(\gamma)+\mu(\gamma')]) \right\}$$

The energy of the secondaries, γ', is in this case 0.51 Mev., independent of γ.

$$\eta_2 = \left\{ 1 - \Phi'(2\mu(\gamma')R_2) \right\}$$

and the triple coincidence counting rate is:

$$N = \eta_1 \eta_2 \, N_0/\text{pair} = \eta_1 \eta_2 \frac{\tau}{4\pi} \Delta\Omega V \Gamma$$

$V \Delta\Omega$ is $\sim 8.3 \times 10^{-3}$ cm^3 for the pair geometry. The sensitivity, $\frac{N}{\Gamma}$, is again plotted in Fig. 13.

APPENDIX II

Circuit Diagrams of Electronic Components

This section presents circuit diagrams of electronic equipment not described elsewhere.

UNCLASSIFIED
DWG. 12843

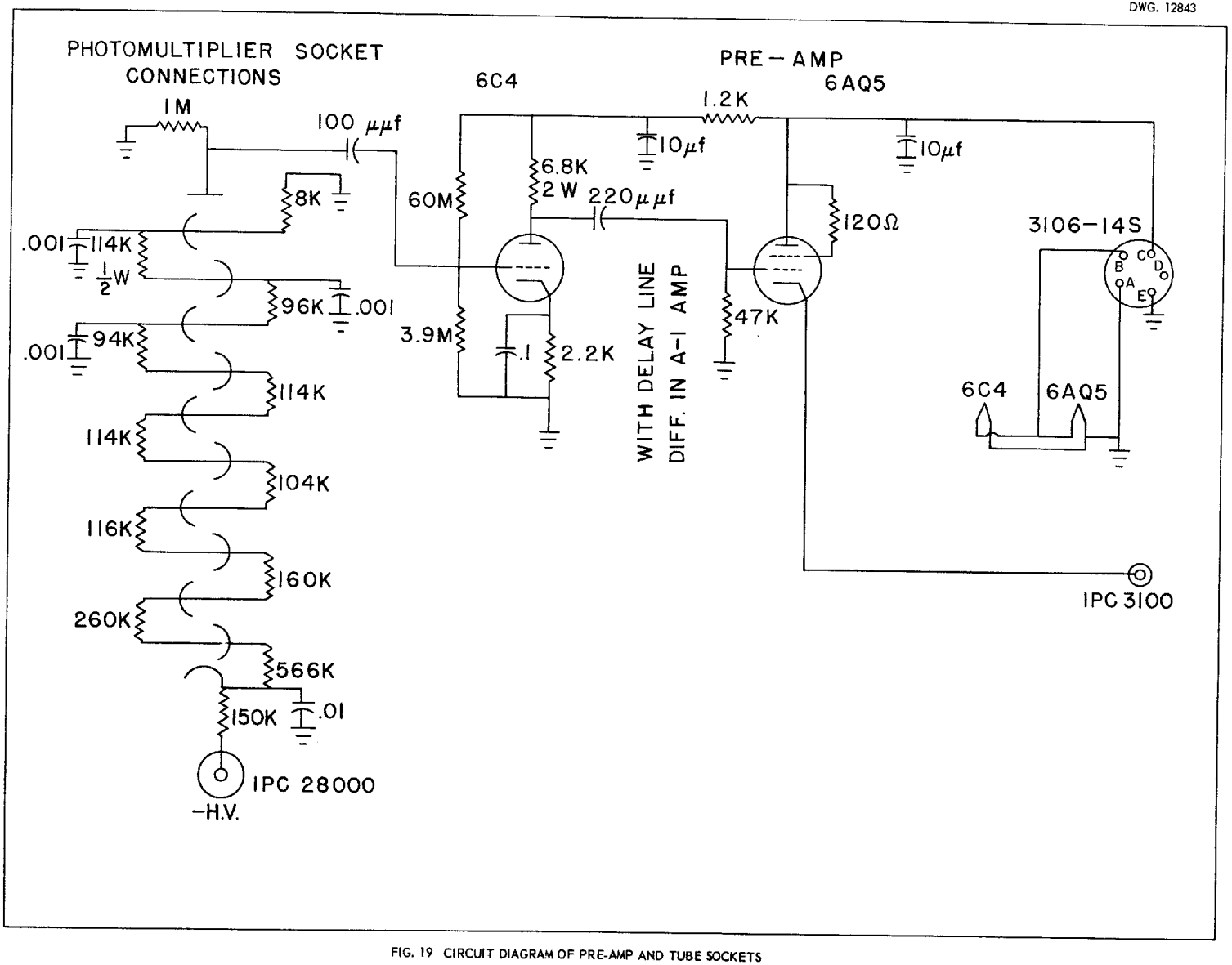

FIG. 19 CIRCUIT DIAGRAM OF PRE-AMP AND TUBE SOCKETS

UNCLASSIFIED
DWG. 12844

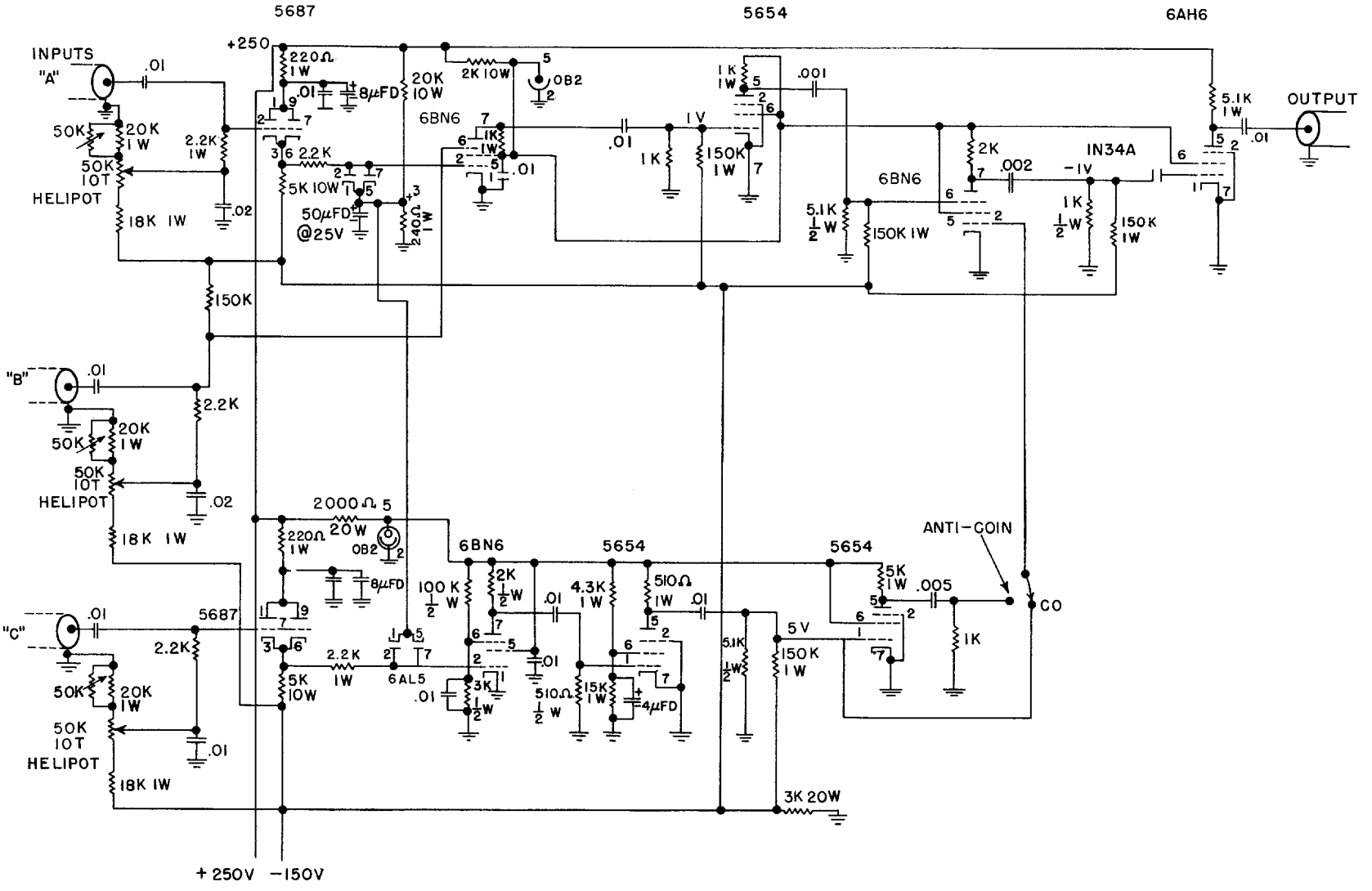

FIG. 20. CIRCUIT DIAGRAM OF THREE-CHANNEL COINCIDENCE CIRCUIT