CENTRAL RESEARCH LIBRARY
DOCUMENT COLLECTION

MARTIN MARIETTA ENERGY SYSTEMS LIBRARIES
3 4456 0360909 4

ORNL-1144
Chemistry-Radiation and Radiochemistry

PRODUCTION SEPARATIONS OF FISSION-PRODUCT GROUPS FOR THE RADIOISOTOPE PROGRAM

CENTRAL RESEARCH LIBRARY
DOCUMENT COLLECTION
LIBRARY LOAN COPY
DO NOT TRANSFER TO ANOTHER PERSON
If you wish someone else to see this document, send in name with document and the library will arrange a loan.

OAK RIDGE NATIONAL LABORATORY
OPERATED BY
CARBIDE AND CARBON CHEMICALS COMPANY
A DIVISION OF UNION CARBIDE AND CARBON CORPORATION
POST OFFICE BOX P
OAK RIDGE, TENNESSEE

[redacted]

ORNL-1144

This document consists of 19 pages.

Copy 9 of 141 copies. Series A.

Contract No. W-7405-eng-26

OPERATIONS DIVISION

RADIOISOTOPE DEVELOPMENT DEPARTMENT

PRODUCTION SEPARATIONS OF FISSION-PRODUCT GROUPS FOR THE RADIOISOTOPE PROGRAM

P. O. Schallert

DATE ISSUED: JUL 28 1952

DECLASSIFIED Per Letter Instructions OA AEC 7-22-55

9-20-55 SUPERVISOR LABORATORY RECORDS ORNL

OAK RIDGE NATIONAL LABORATORY
operated by
CARBIDE AND CARBON CHEMICALS COMPANY
A Division of Union Carbide and Carbon Corporation
Post Office Box P
Oak Ridge, Tennessee

[redacted]

[redacted]

MARTIN MARIETTA ENERGY SYSTEMS LIBRARIES

3 4456 0360909 4

PRODUCTION SEPARATIONS OF FISSION-PRODUCT GROUPS FOR THE RADIOISOTOPE PROGRAM

P. O. Schallert

ABSTRACT

A general description is given of five years' experience in routine production of fission products of high concentration and high activity levels for the radioisotope program. Details of construction and production processes are given for two systems which were built on ion-exchange principles.

INTRODUCTION

The development of ion exchange as a valuable tool in radiochemical separations is well documented.[1] From early work a system was planned by Tompkins and Hawkins,[2] using all ion-exchange principles, to process uranyl nitrate hexahydrate (UNH) directly and turn out uranium-free separated, concentrated, fission products.

Design and construction of this volume-reduction-columns (VRC) system were begun in cell 4, bank 1 of Bldg. 706-C in 1945 by Hawkins and Garber of the Chemistry Division and were nearly completed by late 1946. Since this installation was considered a production tool and fundamentally of little interest to the Chemistry Division, it was then turned over to the Operations Division which had been assigned the responsibility of handling the production and distribution of radioisotopes.

SUMMARY

Operation of a VRC system for the separation of fission products was started at ORNL in late 1947. In 1948 the VRC system was replaced with the mass-stripping system, which used ion-exchange principles and introduced a mass-stripping technique and greatly modified equipment. In early 1951 the mass-stripping system was replaced with a new VRC-type ion-exchange system based on new work.

Multicurie quantities of most of the fission products were produced, indicating that chromatographic ion-exchange processes are satisfactory where high yield is not essential. However, the techniques used in the earlier phases of the work were much too inflexible, slow, and inefficient to be satisfactory for routine production of fission products. It is concluded that while ion-exchange processes are useful and, in the case of certain rare earths, essential for the separation of fission products, a more successful overall production unit can probably be devised by using ion-exchange methods in conjunction with other methods – such as solvent extraction and precipitation.

VOLUME-REDUCTION-COLUMNS PROCESS

Theory. This process is based on the principles of selective elution and of volume reduction. A selective elution of a given activity or group of activities may be made through the complexing action of citrate solutions at controlled pH levels. The volume of elutriant required is several times greater than the volume of the eluted resin bed but if the active effluent is lowered in pH and passed through another smaller column the activity is reabsorbed there and may subsequently be re-eluted as before but in a much smaller volume. Since the minimum size of the receiving column is limited by the volume of effluent it is to receive, it may be necessary to have several successive volume-reduction steps to achieve a satisfactory final volume.

Procedure. The procedure from MonC-34 is outlined in Fig. 1, which shows only the essential steps and omits the many auxiliary steps such as column regenerations and washings.

---

(1) Chicago reports, CN-1839, CN-1859, CN-1873, CC-183, CC-2827, CC-2015, CN-2563, CN-1808, CN-839, CC-2829; Clinton Laboratories report, MonC-40.

(2) E. R. Tompkins and M. B. Hawkins, *Proposed Plans for a Fission Product Separation Apparatus Employing Ion Exchange Columns*, MonC-34 (Dec. 10, 1945).

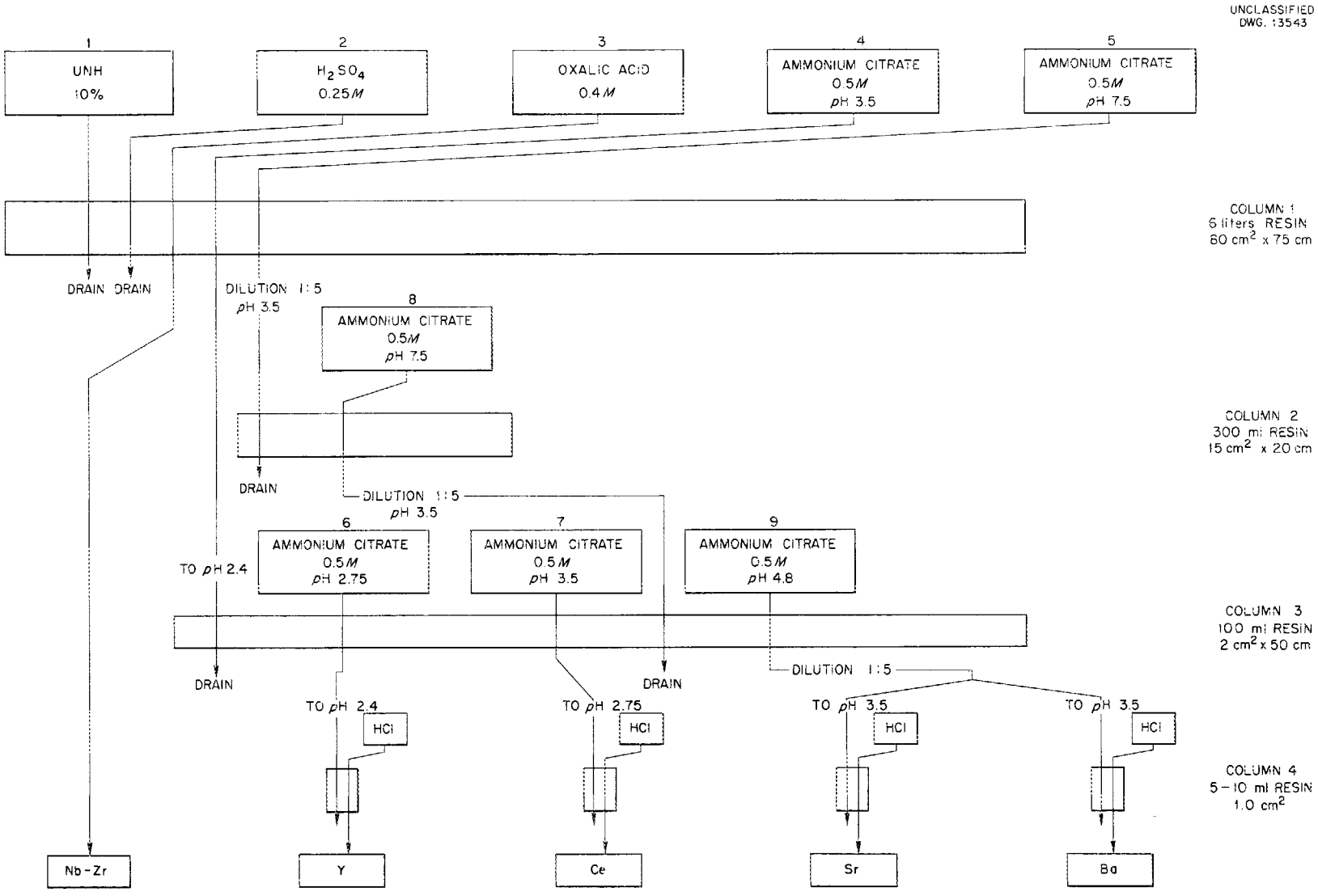

Fig. 1. VRC Process.

The feed solution of acidity below 0.1 *N* consisted of 10% UNH containing 1 slug in 25 liters. Concentrated UNH was blown up to the head tank from a stainless steel storage tank, diluted, and passed through the 6 liters of resin in column 1, with the effluent going to waste. The absorbed uranyl ion was removed with 0.25 *M* sulfuric acid, and the residual acid was washed out with water. A wash of oxalic acid, which passed through only the top of the resin bed and taken off through a collar, removed a niobium-zirconium mixture that was processed elsewhere.

After thorough washing of the column, the elution and volume-reduction cycles were started. In practice the eluting citrate was passed through each column at a controlled rate, and only the active portion of the effluent, as shown by the electronic equipment, was taken for volume reduction. The active effluent from columns 1 and 2 was continuously reduced in pH by controlled addition of standard nitric acid and passed through the proper succeeding column. The active effluent from column 3 was small enough in volume so that cuts could be collected to be acidified and passed through individual columns (No. 4). On these columns a final volume reduction was made and a metathesis performed by taking off the product in 6 *N* hydrochloric acid, usually 25 ml.

Rare earths were moved from column 1 to column 3 with citrate at pH 3.5 and separated off column 3 at pH 2.75 to 3.5. Alkaline earths were moved from column 1 to column 2 to column 3 at pH 7.5 and separated off column 3 at pH 4.8. The active effluent from each column was diluted 1 to 5 before reducing the pH. The pass through the intermediate-sized column 2 was necessary because of less favorable volume-reduction factors with strontium and barium.

Equipment. *General.* The equipment was mounted on a large steel rack, 4 ft wide by 10 ft high, offset from one wall. A head tank and resin columns were mounted so as to allow gravity flow. Other pieces of equipment necessary for operation and control, such as valves, lines, etc., were placed appropriately. All valves were of stainless steel and were usually connected to the glass lines with Saran tubing to give a slightly flexible coupling.

The system was operated by control rods from a control table on top of the cell (Fig. 2). Positive and negative air pressures were available for flow and for agitation. Distilled water and reagent lines ran to each column, to mixing vessels, and to other appropriate points.

An electronic system provided a visual record of activity levels, and an extensoscope allowed direct observation of equipment.

Columns. The resin columns were of closed glass construction, appropriately valved. A backwash line extended down into each column to the bottom of the resin bed. In the top of the column a screened outlet to the drain served as backwash outlet and as a vent.

Resin was added in an aqueous slurry from the control desk through a 3/8-in. Saran tube. Resin was removed from the column by suspending it with backwash water and then opening a valve that was teed into the backwash line connected to a carboy on which negative pressure was maintained. Thus the resin was removed from the column into the carboy and disposed of.

Column 1 was made up of two 2-ft sections of 4-in. pyrex pipe. A stainless steel screen supported in the bottom served as support for the resin bed. A stainless steel collar with a screened outlet was bolted between the two sections of pipe and served as a take-off from the top of the resin bed.

Columns 2 and 3 were much smaller, although similar in structure. They were of glass, with sealed-in fritted-glass filters in the bottom. A spherical enlargement at the top facilitated backwashing.

The No. 4 columns differed completely in design, though not in function. Since they were too small to operate like the others, they were mounted on a rotary selector and were removed with long tongs for servicing.

The effluent lines from columns 1 and 2 contained glass bulbs where the continuous pH adjustment was made. The citrate effluent was mixed with standard nitric acid run in through a capillary from rotameters on the control table. Two strengths of acid were used, 0.4 *N* or 4.0 *N*, depending on the rate of citrate flow. Dilution water also could be added.

Electronic Equipment. The electronic equipment was comprised of ionization chambers, Beckman amplifiers, and electronic recorders. These were

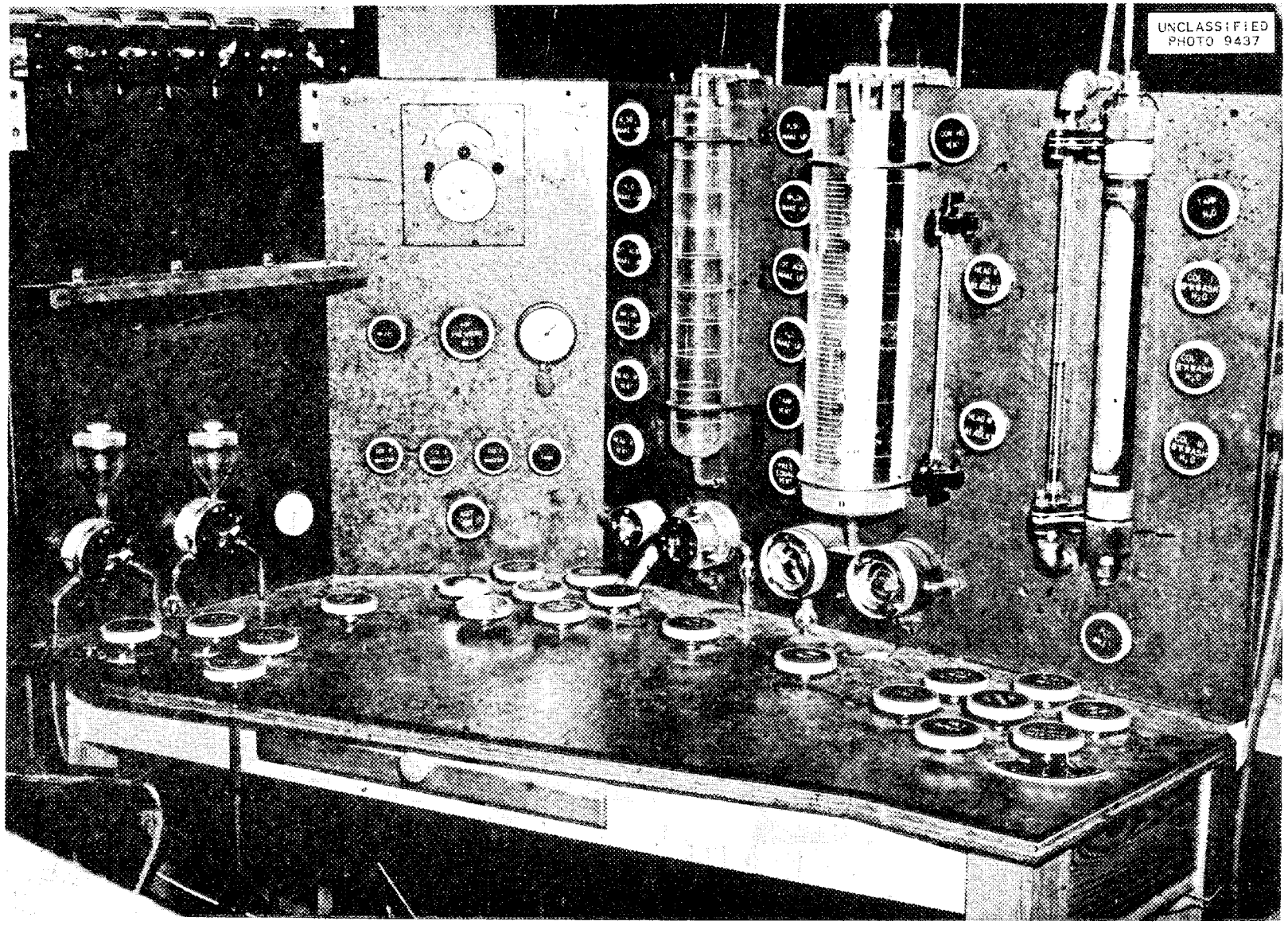

Fig. 2. VRC Control Table.

arranged so as to provide a differential picture of influent and effluent activities across each column. As originally installed, the chambers were a flow-through type mounted inside the cell in shields, with a switch box for switching any chamber to the amplifiers and recorders.

This system was unsatisfactory. The chambers could not be made leakproof, they could never be relied upon, and since they were inside the cell they were inaccessible because of radiation. The Beckman amplifiers also were exceedingly erratic and unreliable under the conditions in which they were installed.

For our requirements, E. E. Fairstein, of the Chemistry Division's electronics group, designed a satisfactory system which proved dependable, stable, and readily adjustable for varying activity levels. A full description, with wiring diagrams and photographs, appears in CNL-37, p. 159.

In this arrangement the ionization chambers were hung on the outside wall of the cell behind swinging lead shields and connected with the apparatus inside by 1/8-in. Saran tubing. A small electrometer was attached directly to each chamber and fed a separate channel in a recorder control box.

In operation this system proved so satisfactory that it was used practically without change for several years and served as a model for other later installations. The Saran tubing seemed very resistant to strong reagents and radiation. After two years in service, the only noticeable effect on this tubing was embrittlement.

Materials of Construction. The sulfuric acid used (0.25 *N* for uranium stripping 2 *N* for resin regeneration) was made 0.2 *N* in nitric acid, since tests indicated that this strength would protect the stainless steel in the system but not attack the resin. Results did not justify this; there was slow attack on the steel and also on the resin if they were left very long in contact with the acid.

Product Handling. The installation had included an elaborate system of product handling, comprising a storage selector, a set of shielded storage containers for individual products, and a dispensing buret system. It very early became clear that the quality of the products, their impurity and the uncertainty of their contents made completely impractical the use of the product-handling system. A string-and-pole method was used to remove all products as soon as they were obtained.

Discussion of VRC Process. Although many crude products were obtained, they were of concentration and of purity far below the desired values. Further, although the flow sheet seems straightforward, the process required two weeks or more to run through and was very tedious to operate during most of this time. For example in moving rare earths from column 1 to column 3, many liters of citrate were required and yet the maximum allowable flow through column 3 was only 20 ml/min, including the added acid. Thus this step alone required several days of constant attention to the very low-flow-rate rotameters used.

Unquestionably the main fault of the process was the large volume of citrate that had to be used to take activities off column 1. Because of the many liters that had to be used, it could hardly be expected that optimum top-of-column absorption could be attained on the following columns from volumes over 200 to 300 ml. The same principle applies in moving activities between columns 2, 3 and 4. Analyses revealed in every step an initial absorption, followed by diffusion, downward shifting, and heavy loss to the effluent. Essentially, the sum of the inefficiencies approached 100%.

The causes for this condition were basic. It had been expected that all activities would adsorb out of the feed UNH in a fairly discrete band in the upper part of the column, thus keeping to a minimum the amount of citrate required to bring off the major part of the given activity. This condition was not attained. It was evident that the mass effect of the bulk uranyl ion resulted in shift and diffusion of all activities.[3] Further, 0.25 *N* sulfuric acid has a similar effect. The result was that to remove a given set of activities an even larger volume of citrate was required than was called for in the MonC-34 flow sheet, and the main peak of the activity was much more diffuse than planned.

---

[3] W. E. Cohn, *The Separation and Purification of Carrier-Free Fission Products, including Individual Rare Earths, by Specific Elution from Amberlite Resin*, CN-2827, p. 17 (June 11, 1945), and also by personal experience.

Results. *Uranium and Plutonium.* The niobium-zirconium products usually contained low concentrations of uranium, whereas the rare earth and alkaline earth products usually contained no uranium. All products, however, were heavily loaded with alpha emitters, which made them unsuitable for most uses.

Niobium-Zirconium. The tentative flow sheet (MonC-34) showed volume-reduction steps for the niobium-zirconium mixture, but further laboratory work indicated that these steps were not feasible. It was known that the niobium-zirconium mixture came out on the top of a resin bed because of its radiocolloidal condition, so a collar with take-off valve was provided just below the top of the resin bed to take off the product in 5% oxalic acid. A number of these products were obtained at a concentration of several millicuries per milliliter of solution.

Rare Earths. Many rare-earth products were also obtained at a concentration of several millicuries per milliliter of solution. Without exception, these were mixtures of all the rare earths (frequently other isotopes, too), were relatively high in alpha contamination, and represented a very low yield efficiency. No appreciably pure yttrium or cerium fractions were ever obtained.

Alkaline Earths. A few separated, impure products of barium and of strontium were made that showed at least a high enrichment of one or the other component. However, all of these contained large proportions of rare earths and the yield efficiency was very low.

MASS-STRIPPING PROCESS

Theory. The mass-stripping process was based on the theory that all the absorbed activities could be stripped from the large absorption column with hydrochloric acid, and the acid could then be distilled off to leave a highly concentrated aqueous solution. This concentrate could then be put on a small resin column for selective citrate elution of its constituents.

Procedure. The procedure is outlined in Figs. 3 and 4. As before, only essential steps are shown, and the many preparative, regenerative, and treatment steps actually employed are omitted.

Composition of the feed UNH solution varied according to product needs. If niobium-zirconium mixture was to be collected, the undiluted UNH that was high in free acidity (0.4 to 0.6 *N*) to favor the radiocolloidal niobium-zirconium adsorption on the small column 1 was used to completely separate the product. In this case the UNH was diluted in the top of column 2 with distilled water to below 0.1 *N* acid to favor ion-exchange absorption there of cation activities. If niobium-zirconium mixture was not to be collected, the UNH was diluted in the head tank. The effluent from column 2 could be sent to the precipitation tank for a platinum sulfide precipitation to carry anion activities, chiefly ruthenium.

The niobium-zirconium mixture was stripped off column 1 with oxalic acid and removed as a crude product.

Forty to forty-four liters of sulfuric acid, 0.25 *M*, was run through column 2 until all uranium was removed. The end point was reached when ferrocyanide no longer produced a red color in this acid effluent, as was observed through the extensoscope by means of a simple test-sight glass installed in the column effluent line. The acid was then washed out until barium chloride solution, also observed in the test sight, produced no sulfate cloudiness.

The column was stripped with 6 *N* hydrochloric acid added to the column from the control desk or blown in from the acid storage vessel. When activity appeared in the effluent, producing a great rise on the recorder, the flow was diverted from drain to still and evaporation was begun. Four to six column volumes of acid were required to strip the column down to a reasonably low level of effluent activity.

This acid was distilled off and collected in the acid tank for recycling. The still residue was fumed several times with nitric acid to destroy organic matter, which is always extracted from the resin. Hydrochloric acid was added to destroy the nitric acid, and several water evaporations were performed to drive off the last of the hydrochloric acid, leaving an essentially aqueous solution. This solution was diluted and put through column 3, the separations column, where selective citrate elution was effected.

Usually activity peaks were collected from column 3 at pH 2.75 and at 3.5, and one product was collected between these two values; strontium

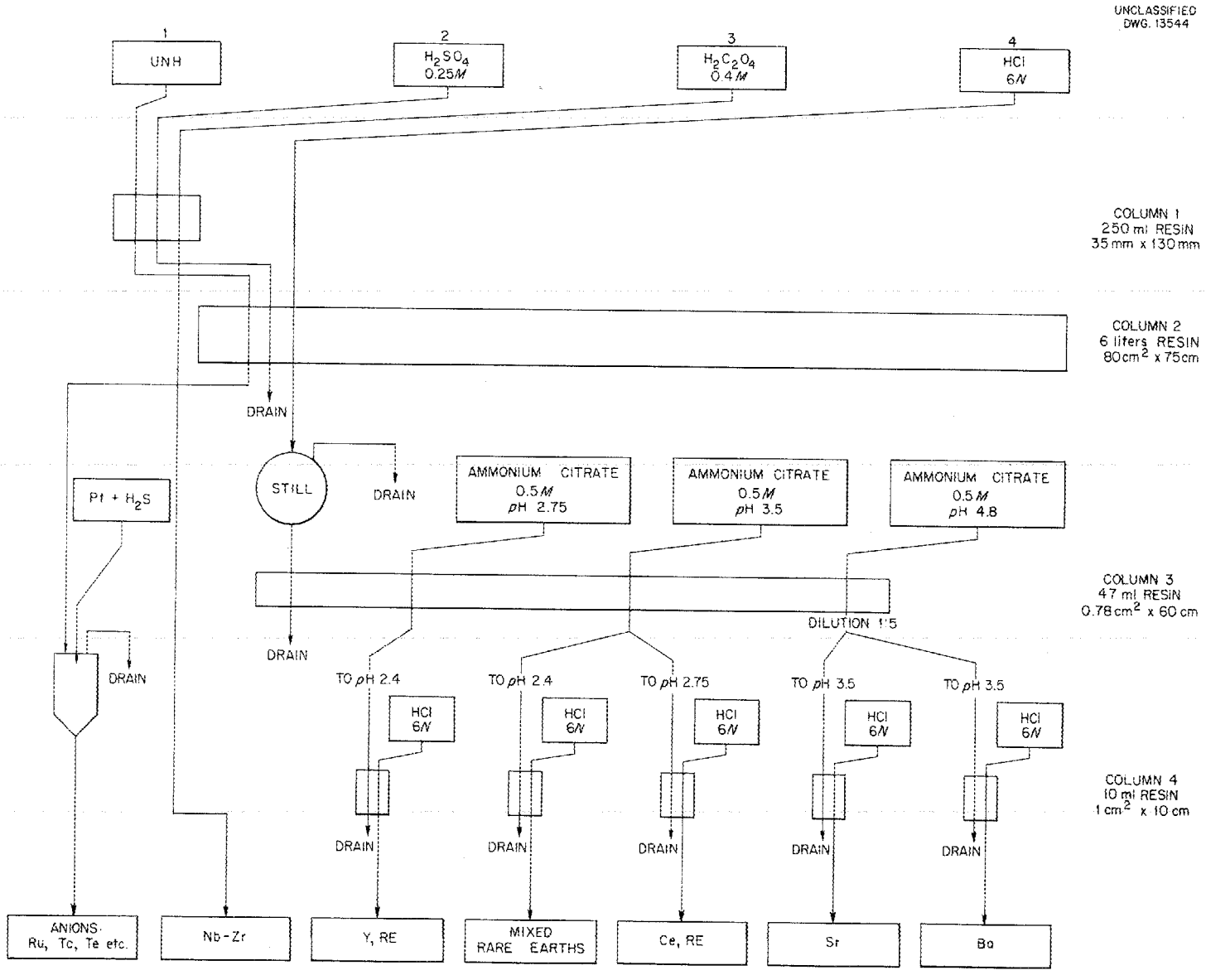

Fig. 3. Mass Stripping Process (simplified flow sheet).

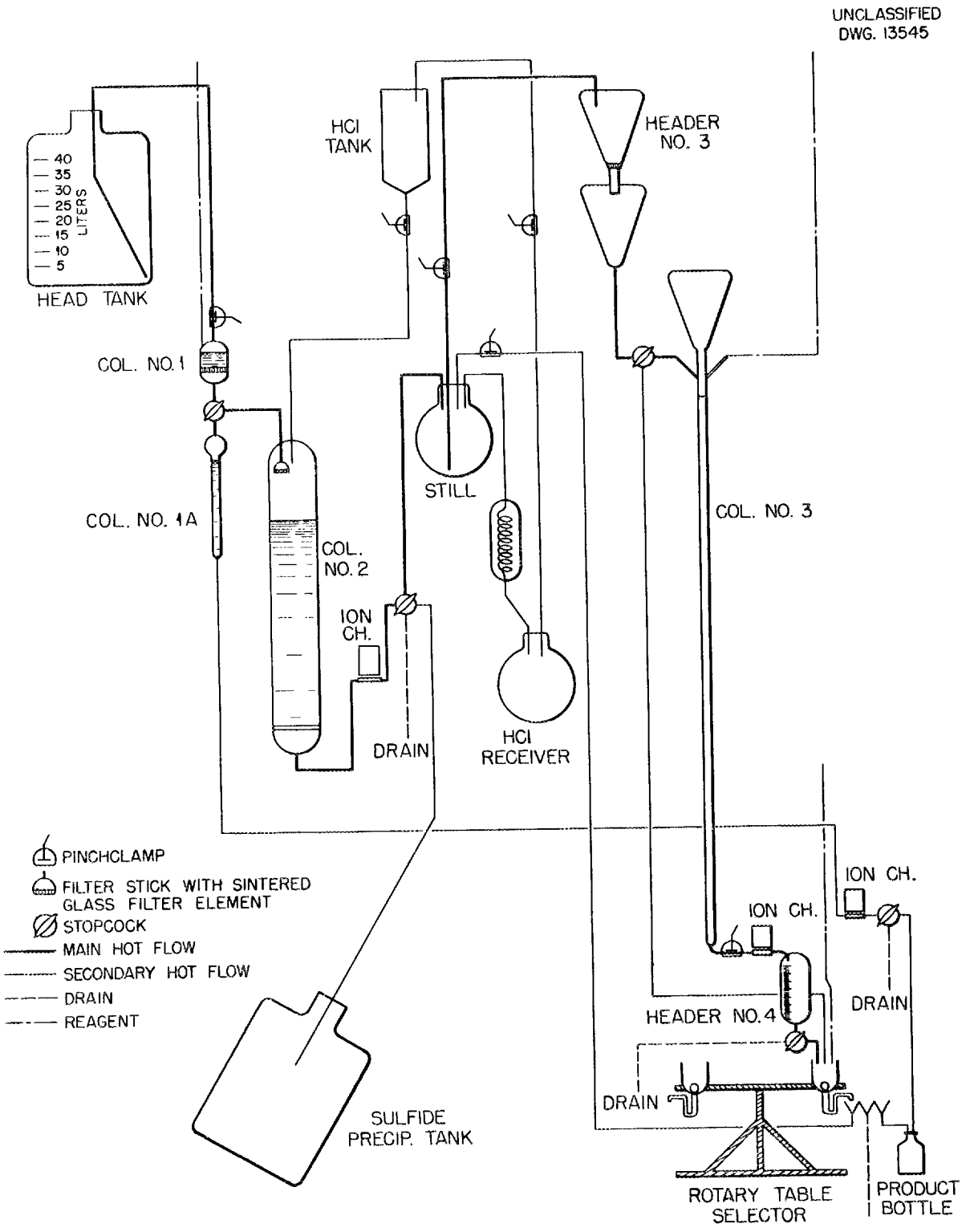

Fig. 4. Mass Stripping Process (schematic diagram).

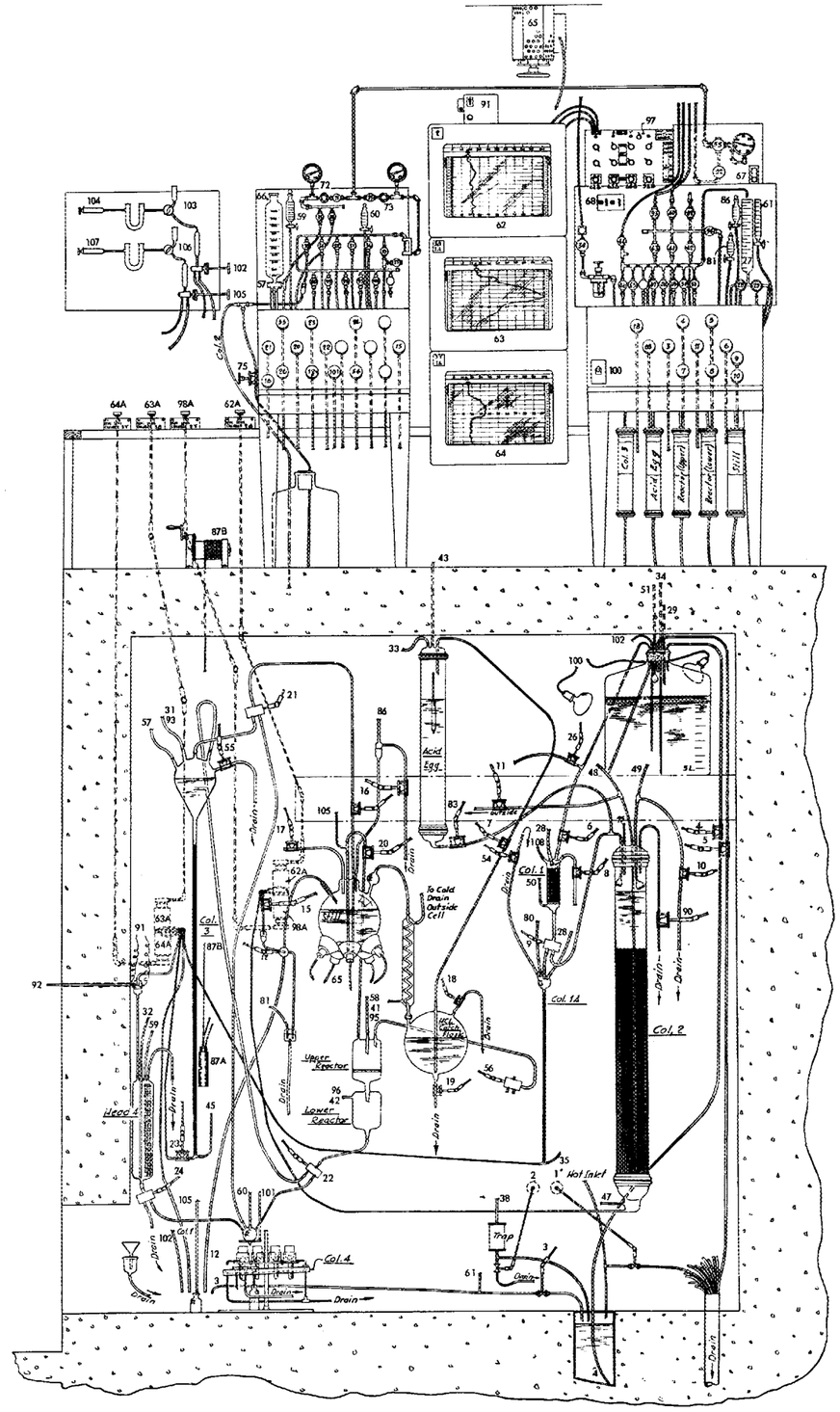

Fig. 5. Mass Stripping Process Assembly.

SEPARATION SYSTEM
ASSEMBLY CODE

NO.	NAME	LOC.	TYPE
1	Hot Transfer Line to Drain	MF	V
2	Storage Tank Vent	MF	V
3	UNH Delivery Line	RT	V
4	Storage Tank to Head Tank	RT	PC
5	Head Tank Vent	RT	PC
6	Head Tank to Col. 1	RT	PC
7	HCl Catch Flask to Acid Egg	RT	PC
8	Col. 1 Vent to Drain	RT	PC
9	Col. 1 – to Col. 2, to Col. 1A	RT	SC
10	Col. 2 Vent to Drain	RT	PC
11	Col. 2 Resin Outlet	RT	PC
12	Col. 2 to Drain, to Sample to Still	LT	SC
13			
14			
15	Col. 2 Bottom Outlet	LT	PC
16	Still Trap Vent	LT	PC
17			
18	HCl Catch Flask Vent	RT	PC
19	HCl Catch Flask Drain	MF	PC
20	Still to Reactor	LT	PC
21	Still to Col. 3, to Col. 4	LT	SC
22	Reactor to Col. 3, to Col. 4	LT	SC
23	Col. 3 Bottom Outlet	LT	PC
24	Head 4 – to Drain, to Col. 4	LT	SC
25			
26	Head Tank to Drain	LT	PC
27	Graduate (1-Liter)	RP	
28	Grad. – to Col. 1, to Col. 1A	RP	SC
29	Grad. – to Head Tank, to Drain	RP	SC
30	Water to HCl Condenser	RP	V
31	Air – Col. 3	LP	V
32	Air – Head 4	LP	V
33	Air – Acid Egg	LP	V
34	Air – Head Tank	LP	V
35	Col. 1A Underfilter	LP	V
36	Air	LP	V
37			
38	Air Storage Tank	LP	V
39	Air Low Press. Main	LP	V
40	Vacuum – Main	RP	V
41	Vacuum Reactor Upper	RP	V
42	Vacuum Reactor Lower	RP	V
43	Vacuum to Acid Egg	RP	V
44	Distilled H_2O Main	RP	V
45	Dist. H_2O Col. 3 under Filter	RP	V
46	Dist. H_2O	RP	V
47	Dist. H_2O Col. 2 under Filter	RP	V
48	Dist. H_2O Col. 2 Backwash	RP	V
49	Dist. H_2O Col. 2 Topwash	RP	V
50	Dist. H_2O Col. 2 under Filter	RP	V
51	Dist. H_2O Head Tank Spray	RP	V
52	Air Inlet to Press Regulator	RP	V
53	Air Pressure Regulator	RP	G
54	Col. 1A Backwash Vent	LT	PC
55	Col. 3 Backwash Vent	LT	PC
56			
57	Burette – to Drain, to Col. 3	LP	SC
58	Burette to Reactor	RP	SC
59	Burette to Head 4	LP	SC
60	Burette to Col. 4	LP	SC
61	Burette to UNH Delivery Line	RP	SC
62	Col. 2B Recorder	F	
62A	Col. 2B Ion Chamber Sensitivity Selector	F	
62B	Col. 2B Recorder Amplifier	F	
63	Col. 3 & Col. 1A Beta Recorder	F	
63A	Col. 3 & Col. 1A Beta Ion Chamber Sensitivity Selector	F	
63B	Col. 3 & Col. 1A Beta Recorder Amplifier	F	
64	Col. 3 & 1A Gamma Recorder	F	
64A	Col. 3 & 1A Gamma Ion Chamber Sensitivity Selector	F	
64B	Col. 3 & 1A Gamma Recorder Amplifier	F	
65	Variac – Still Heat Lamps	O	
66	Graduate – 1 Liter	LP	
67	Vac. Pump Switch	RP	SW
68	Cell Floodlights	RP	SW
69	Cell Ceiling Lights	MF	SW
70	Resin Addition Funnel	B-LP	V
71	Air – Hi Press. Main	LP	V
72	Air – Hi Press. Reg.	LP	V
73	Air – Lo Press. Reg.	LP	V
74	Air – Lo Press. Sight	LP	
75	H_2SO_4 to Col. 2	LP	V
76	Col. 3 Funnel	B-LP	V
77			
78	Col. 2 Air	LP	V
79			
80	Col. 1A Air	LP	V
81	Burette to Col. 2 Eff. Sight Glass	RP	SC
82	Vac. Manifold Vent	RP	V
83	Acid Egg to Col. 2	RT	PC
84			
85			
86	Still Burette to Still Trap	RP	SC
87	Col. 3 Probe Amplifier	LP	
87A	Col. 3 Probe	Inside	
87B	Col. 3 Probe Winch	B	
90	Col. 2 Top Resin Outlet	MF	PC
91	Col. 3 Drop Counter	MF	
92	Col. 3 Sampler and Drop Counter Electrodes	MF	
93	Vac. Col. 3	RP	V
94	Vac. to Still	RP	V
95	Air Reactor Upper	LP	V
96	Air Reactor Lower	LP	V
97	Gamma Recorder Switch Col. 2 – Col. 3	F	SW
98A	Col. 2 Gamma Chamber Sensitivity Control	F	
98B	Col. 2 Gamma Recorder Amplifier	F	SW
99	Air to Still	LP	V
100	Head Tank Floodlights	F	SW
101	Porcupine Position Control	LT	
102	Head Tank Sampler	B-LB	
103	Head Tank Sampler Valve	B-LP	SC
104	Head Tank Sampler Syringe	B-LP	
105	Still Sampler	B-LP	
106	Still Sampler Valve	B-LP	SC
107	Still Sampler Syringe	B-LP	
108	Air to Col. 1	LP	V

LOC. CODE	TYPE CODE
LT - Left Table	V - Valve
LP - Left Panel	PC - Pinchclamp
RT - Right Table	SC - Stopcock
RP - Right Panel	G - Gauge
F - Front	SW - Switch
O - Overhead	
B - Behind	
MF - Main Floor	

and barium were separated and collected at pH 4.8. Each cut was collected, acidified, and passed through an individual small column 4 for final concentration and metathesis to chloride form.

Equipment. *General.* Equipment was mounted on the same rack used for the VRC process to allow gravity flow as far as possible. Reagent makeup vessels were kept outside the cell on the control platform, as was all electronic equipment.

The system was operated by control rods from the control tables on top of the cell and by valves, stopcocks, burets, etc. (Fig. 5). Air pressure was supplied to every vessel, including the columns; positive and negative air pressure were always available for moving liquids and for agitation. Distilled water and reagent lines ran to appropriate points.

Universal joints on control rods were welded, or drilled and pinned, packed in grease, and covered with Tygon tubing (Fig. 6). End connections on rods were also welded or pinned.

The same electronic system that was developed in the VRC process was used, and also the same extensoscope was used.

Flow-Interruption Devices. Standard valves and stopcocks are very unsatisfactory as flow-interruption devices. Several special devices were developed and used. A pinchclamp valve to work on heavy Tygon tubing was designed by J. R. Farmakes and E. E. Pierce and was first tested in this apparatus[4] (Fig. 6). This clamp proved very satisfactory and was widely used. Also in Fig. 6 may be seen several variations of a very adaptable and sturdy stopcock mount (Radioisotope Development Drawing 152-155). The stopcock was held in place in the stainless steel barrel with plaster of paris, and the plug was lubricated with Apiezon-graphite mixture.

Resin. This system was designed for Amberlite resin, IR-1 and IR-100. Dowex was well known by this time, but it cannot be said unequivocally that Dowex is better than Amberlite, however, Dowex is far less hydrogen-ion sensitive. This means that a given amount of activity can be stripped from Amberlite in far less acid than from Dowex, and this is a decisive point in both columns 2 and 4. Observations from the VRC process and opinions of other workers[5] showed that it was unlikely that there would be much separation of individual radioisotopes with column 3, the separations column. Amberlite is more flexible than Dowex in use and its characteristics were well known, hence, it was selected for column 3 also.

Columns. VRC principles of resin addition and removal were excellent and necessary and were retained. Backwash water, however, was supplied beneath the fritted-glass filter in the bottom of each column, rather than by a long dip leg. This served for resin removal by simply washing the resin out the vent line to the drain. Column 2 retained the dip leg connected to the carboy, since this volume of resin was too large to wash to the drain. Water, reagent, and air lines ran to the top of each column.

Columns 1 and 1A were designed for niobium-zirconium adsorption and treatment by being made completely separate from the large adsorption column for better control over conditions of adsorption and elution. Column 1, the preadsorption column, was short and thick; column 1A was long and slender. A diversion-stopcock mount between the columns directed the flow from column 1 to either column 1A or 2.

Column 2, the main absorption column, was a 4-ft section of 4-in. pyrex pipe, containing 6 liters of resin. Bolted to the upper end was a 4- to 2-in. bell reducer. In the small end of the bell reducer was a neoprene stopper (held with pipe flanges) for passing the requisite lines. On the lower end was a 4- to 1-in. bell reducer with a tee for outlet and backwash lines. Between this reducer and the lower end of the column, an assembly device of fluorothene was placed for holding a large (90 mm) fritted-glass filter[6] as retainer for the resin bed. This device was highly satisfactory and showed no perceptible change after two years' service.

Column 3 was a long slender column, originally 240 by 1.4 cm but later reduced to 50 by 1.2 cm, and it contained 47 ml of resin.

---

(4) Fig. 5, No. 5497 photofiles; Drawing No. C-8790.

(5) "...minor variations in operating conditions of the columns affected the fractionations rather markedly ... little hope of achieving complete separation (i.e., of a great mixture) in a single cycle with these resins." D. H. Harris and E. R. Tompkins, *J. Am. Chem. Soc.* 69, p. 2792 (1947).

(6) Drawing C-5204, Filter Holding Assembly.

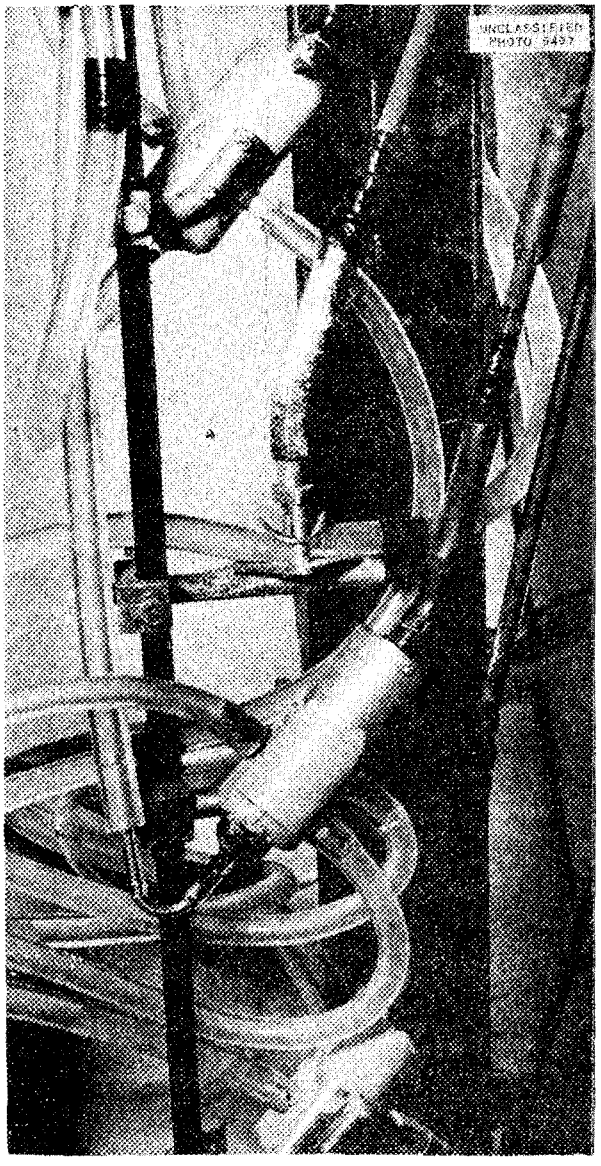

Fig. 6. Remote Control Clamps and Stopcocks.

Number-4-type columns were mounted on a stainless steel turntable positioned just inside the doorway of the cell and controlled from the control platform. Each column consisted of a bowl of 275-ml capacity and a stem containing 10 ml of resin. The bowl was large enough to receive a whole citrate cut from column 3; it held a hollow glass ball float bearing a ring seat ground in with the shoulder of the stem and weighted on the bottom to keep the seat positioned. This was very effective in making a seal to prevent drying out of the resin bed.

To reduce gross cross-contamination, resin in these columns was used only once; then the column was removed with long tongs and the resin discarded.

Auxiliary Equipment. A head tank was made of a 44-liter carboy with graduations painted on the side. A neoprene stopper was held in place by steel props braced against the ceiling. Lines through the stopper, including dip legs, were of glass or Saran tubing usually coupled to heavy Tygon tubing.

A still was required to distill off hydrochloric acid. It had to afford vision and be corrosion-proof. The final development employed a glass, 5-liter, 3-neck flask, with semi-ball joints on all necks. The large middle neck contained a special fitting made from Teflon, bearing a male semi-ball joint machined on the lower end and passing several lines, two of which were dip legs extending to the bottom of the still. Heating was accomplished by a bank of five 375-w heat lamps mounted on a tray, which could be pulled up on a track to the high north window of the cell for lamp replacement.[7]

A Stang-type reactor could receive material from either the still or the precipitation tank and deliver to either column 3 or to the column 4 selector.

The precipitation tank was designed to receive the column 2 effluent for sulfide precipitation to carry anion activities. It was a 44-liter carboy mounted in a cradle at a 45-degree angle to act as a settling tank for the sulfide sludge. A neoprene stopper was clamped in the neck, and various lines were supplied, such as a decant line for the supernate, a dip leg for hydrogen sulfide addition and for agitation, a dip leg for sludge removal, a reagent line, an air pressure line, and water rinse lines.

Product Removal. In the past, most handling was done with string and pole. For this installation a system was built that used a product bottle in a lead pig on a cart which was run in and out the cell door on a track (Radioisotope Development Drawing 173-174).

Samplers. Samplers provided for the head tank and still (Radioisotope Development Drawings 165, 167) were conventional; they were made from a

---

[7] D-6221, Mobile Rack for Heat Lamps.

three-way stopcock. The product sampler (Radioisotope Development Drawing 129) was unique in forcing out liquid through a capillary glass tube into a small centrifuge tube hung in a water column to afford shielding and vision. A column-3 sampler (Radioisotope Development Drawing 130) utilized a capillary glass tube that was inserted through the cell wall into the hole in the side of the drip sight to withdraw a micro-quantity of the effluent. The capillary tube was then withdrawn into protective shielding tubes and the whole assembly withdrawn. A test-sight sampler installed in the column-2 drain line was merely a glass well into which reagent could be added and the result watched in the extensoscope. This was a very simple and very valuable procedure.

Materials of Construction. Glass, Saran, and Tygon were widely used; stainless steel was used only in the UNH storage tank (buried in a well in the floor) and in the valves and lines associated with it.

Much radiation darkening of glass occurred as expected; the still, however, was kept clear by heat. The various pyrex-pipe vessels used were highly satisfactory.

Saran, after long use, including exposure to very active reagents and to intense radiation, showed no effect beyond some embrittlement. Tygon showed only some attack from concentrated nitric acid, as shown by a heavy whitening of the tube lining. This was apparently a limiting corrosion, and since the tubing did not harden, the corrosion was not objectionable.

Fluorothene was used in one exacting situation (mentioned previously) and was perfectly satisfactory. Teflon was also used once for a machined still-head assembly and the two dip legs extending to the bottom of the still. After six months in service, these dip legs were highly granulated and at the point of complete disintegration. However, this was extremely rigorous service. These legs were immersed in boiling hydrochloric acid for long periods, followed by very active nitric acid fuming. They were also in radiation fields as high as several thousand roentgens per hour.

Extremely reliable connections were made from thick-walled Tygon tubing, ¼ in. i.d., softened in hot water and slipped over 3/8-in. Saran tubing or a similar-sized glass or metal nipple. Saran tubing may be used similarly by softening it carefully in hot glycerine and slipping it over a glass or metal nipple.

Discussion of the Mass-Stripping Process. The mass stripping of column 2 with hydrochloric acid was very satisfactory. Distillation of this acid strip also was satisfactory, although destruction of the organic material brought from the resin was troublesome. Citrate elution from the separation column, however, always resulted in great confusion because of the unpredictable picture of the effluent activities. Great variations were continually caused by such factors as: fundamental variations inherent in the slugs and in their treatment; the extremely heterogeneous character of the still concentrate, leading to appearance of extraneous fission products and daughters; the continual production of radioactive daughters such as La^{140} and Y^{90}; and minor variations in column procedure that would produce marked effect on the effluent picture.

Rather than to strive for separation, it became much more workable to simply produce rough concentrates from this cell for reworking elsewhere. This principle was applied to all three classes of products – cationic, anionic, and colloidal.

Many very highly radioactive products were obtained, with the concentration approaching 2 curies/ml on some runs. The gross efficiency, however, was low; that is, the yield across the whole process on individual isotopes was in the order of only 20 to 25% for cations and perhaps 75% for anions and colloids.

Attempts were made to make an activity balance, but as a rule these were far from satisfactory.

Results. *Radiation.* The hottest run ever made with this system occurred in the processing of "young" Hanford material when a total of 764 curies gross beta was charged to the head tank. The activity concentration was probably higher on column 1 than on column 2, since with about 150 ml of resin, column 1 produced three niobium-zirconium products of approximately 40 curies each, which was not all the activity present. However, several products of 50 to 80 curies were removed from some of the No. 4 columns with only 10 ml of resin. No physical effects of high activity, such as gassing and blocking, were observed on any of these columns. There was some apparent resin deterioration, which was evidenced

by more color-throw in the still in this run and in succeeding runs.

This radiation level considerably exceeded the designed capacity of the 2-ft concrete walls of the cell, with 50 to 500 mr coming through, depending on location. Also noteworthy was the very soft, but very pervasive, associated radiation, which would leak through small openings in a very fluid-like manner.

Chemistry. 1. Uranium, Plutonium, and Alpha Contamination. Uranium was satisfactorily removed by 0.25 *M* sulfuric acid. Usually about 43 liters of acid, at 4 to 5 liters/hr, was required. Alpha activity, however, appeared heavily throughout all products and made general retreatment necessary. Plutonium was the chief cause of the activity, but americium was also present at times.

Sulfuric acid is not the perfect agent for uranium removal (see previous section on equipment of the VRC process), because in addition to the shift of activity bands and mixing, some activity is lost -- strontium in particular. S. J. Rimshaw recently recommended the use of oxalic acid to remove uranium. In trial, this was at first highly unsuccessful because uranium oxalate precipitated and plugged the column and lines. In later runs, however, sulfuric acid was used until the bulk of the uranium was rapidly removed; oxalic acid was used to finish off, without appreciable loss of activity.

2. Cesium. In processing old Hanford slugs, it was ascertained that the cesium was removed from column 2 quickly and quantitatively by the 0.25 *M* sulfuric acid.

3. Niobium-Zirconium. Normally from each run several 50-ml products would be obtained in the oxalic acid, each containing several hundred millicuries of mixed niobium-zirconium. A Hanford run yielded three 50-ml products, each with about 40 curies of gross activity. All niobium-zirconium products showed extraneous activities; ruthenium and alpha emitters were usually present.

Various adsorbers were tried and IR-100 resin was selected. This resin was much better as an adsorber than Dowex, as shown by Baldwin.[8] It was also better for the specific conditions than the silica gel recommended by Baldwin[8] for Redox wastes.

Since the niobium-zirconium products are present in colloidal form and presumably do not come out in true ion exchange, it was hoped to find some adsorber which would be still more specific for them -- perhaps an ion-exchange resin before its exchange properties are activated. In answer to a request for some such material, the Resinous Products Company supplied three samples of their Amberols. These were tried under various conditions but showed negligible adsorption.

In the first attempt at separation of niobium and zirconium, columns 1 and 1A were both filled with IR-1 resin. After adsorption on column 1 and washing, citrate at pH 2.26 was run through columns 1 and 1A. This showed promise of achieving separation of niobium and zirconium and perhaps of alpha activity also.

Dowex anion resin prepared according to Baldwin's directions was put into column 1A. The niobium-zirconium was moved from column 1 to 1A with 0.4 *M* oxalic acid and then eluted from 1A with 1 *M* HCl 0.001 *M* in hot oxalic acid. This system also was promising, but the anion resin showed serious and rapid attack by radiation and released a persistent blue color in the products.

It was found much more workable to take off a few hot concentrates directly from column 1 and have them reworked elsewhere.

4. Anion Activities. Ruthenium is the chief anion activity; traces of Te, Sn, Sb, Tc, and possibly others are found. These usually pass through column 2 and come down readily when a platinum sulfide precipitation is made on the effluent.

A nitric acid solution is a poor medium for precipitation with hydrogen sulfide, but this was the only kind of solution regularly available. Destruction of the nitric acid with formic acid was regarded as far too hazardous.

This effluent was normally found to have a pH of 0.5 to 0.65, which was a good range for this precipitation. About 150 mg of platinum was added for 25 liters of solution, which was sufficient to carry the activity but was physically

[8] W. H. Baldwin, *et al.*, *Feasibility Report on Recovery of Fission Zr and Cb from Redox Process Waste Solutions Using Silica Gel*, ORNL CF-49-9-178 (Sept. 28, 1949).

insufficient. That is, a fine black precipitate came down but did not collect well. It was more satisfactory to add a few grams of lead as a scavenger, which caused all the precipitate to collect as a dense mass.

Hydrogen sulfide gas was passed in for several hours and the precipitate was allowed to settle overnight. The clear supernate containing the uranium was decanted to the drain, and then 6 *N* HCl was added to dissolve the lead. The sulfide sludge was treated in various ways. At first it was blown to the reactor, filtered there, and dissolved in ammonia-peroxide mixture. However, finely divided sulfur, from oxidation of H_2S by nitric acid, interfered greatly. It made filtration very slow, made solution of the cake difficult, and stayed in the filter, blocking it and retaining much activity. It soon became much more workable to take out this sludge in a bottle for reworking elsewhere.

5. Rare Earths. Many rare earth concentrates were obtained, with concentrations of 5 to 10 curies in 40 ml of product. Concentrates from Hanford slugs of over 1 curie/ml were obtained.

Yttrium and cerium products usually were obtained in better than 95% purity, mainly because of their separation in the spectrum and the low proportion of the contaminants accompanying each. None of the intermediate rare earths was ever obtained with this high purity. Neodymium and praseodymium peaks were occasionally found and collected just before the cerium peak, but these universally contained major proportions of cerium.

In practice, the main yttrium peak would be collected, one intermediate product at the start of the cerium rise, another almost at the top of the cerium, and finally the main cerium product.

6. Alkaline Earths – Strontium and Barium. Many products of these radioisotopes were obtained in quantities of 500 to 1000 mc each and in fairly good separation and purity. Proper selection of cuts was important. On changing citrate elutriant from pH 3.5 to pH 4.8, usually there would be a first-activity peak composed entirely of rare earths; strontium would appear next and finally barium. A variable quantity of strontium was removed from column 2 by the 0.25 *M* H_2SO_4 wash, and this loss of course was reflected in the strontium product.