CENTRAL RESEARCH LIBRARY
DOCUMENT COLLECTION

[redacted]

Reviewed 7/10/79
P. S. Baker
Did not need second review /che 3/18/82

ORNL-1361
Progress

AEC RESEARCH AND DEVELOPMENT REPORT

DECLASSIFIED
Classification Changed To: U
By Authority Of: 9-24-70
By: G. Goldberg 2-10-71

MARTIN MARIETTA ENERGY SYSTEMS LIBRARIES
3 4456 0360976 2

ANALYTICAL CHEMISTRY DIVISION

QUARTERLY PROGRESS REPORT

FOR PERIOD ENDING JUNE 26, 1952

CENTRAL RESEARCH LIBRARY
DOCUMENT COLLECTION

LIBRARY LOAN COPY

DO NOT TRANSFER TO ANOTHER PERSON

If you wish someone else to see this document, send in name with document and the library will arrange a loan.

OAK RIDGE NATIONAL LABORATORY
OPERATED BY
CARBIDE AND CARBON CHEMICALS COMPANY
A DIVISION OF UNION CARBIDE AND CARBON CORPORATION

UCC

POST OFFICE BOX P
OAK RIDGE, TENNESSEE

[redacted]

[redacted]

[redacted]

ORNL-1361

This document consists of 74 pages.
Copy 6 of 142 copies. Series A.

Contract No. W-7405-eng-26

ANALYTICAL CHEMISTRY DIVISION

QUARTERLY PROGRESS REPORT

for Period Ending June 26, 1952

M. T. Kelley, Director
C. D. Susano, Associate Director

DATE ISSUED

DEC 11 1952

OAK RIDGE NATIONAL LABORATORY
Operated by
CARBIDE AND CARBON CHEMICALS COMPANY
A Division of Union Carbide and Carbon Corporation
Post Office Box P
Oak Ridge, Tennessee

[redacted]

[redacted]

MARTIN MARIETTA ENERGY SYSTEMS LIBRARIES
3 4456 0360976 2

[redacted]

ORNL-1361
Progress

INTERNAL DISTRIBUTION

1. G. T. Felbeck (ORCCC)
2. Biology Library
3. Health Physics Library
4. Metallurgy Library
5. Reactor Experimental Engineering Library
6-7. Training School Library
8-13. Central Files
14. C. E. Center
15. C. E. Larson
16. W. B. Humes (K-25)
17. L. B. Emlet (Y-12)
18. A. M. Weinberg
19. J. A. Swartout
20. E. D. Shipley
21. E. J. Murphy
22. F. C. VonderLage
23. M. T. Kelley
24. E. H. Taylor
25. A. H. Snell
26. F. L. Steahly
27. S. C. Lind
28. R. C. Briant
29. J. S. Felton
30. C. E. Winters
31. A. Hollaender
32. K. Z. Morgan
33. C. P. Keim
34. G. H. Clewett
35. A. S. Householder
36. D. W. Cardwell
37. E. M. King
38. C. D. Susano
39. G. E. Boyd
40. R. B. Briggs
41. G. W. Parker
42. L. J. Brady
43. H. P. House
44. O. Menis
45. C. H. Secoy
46. L. E. Burkhart
47. R. N. Lyon
48. S. A. Reynolds
49. P. F. Thomason
50. R. Rowan, Jr.
51. D. E. LaValle
52. A. R. Brosi
53. A. F. Roemer, Jr.
54. E. I. Wyatt
55. G. W. Leddicotte
56. C. Feldman
57. T. E. Willmarth
58. C. L. Burros
59. J. H. Edgerton
60. L. T. Corbin
61. O. K. Neville
62. P. M. Reyling
63. D. D. Cowen
64. S. D. Schiffman (K-25)
65. H. P. Raaen
66. J. C. White
67. W. K. Miller
68. U. Koskela
69. E. P. Wigner (consultant)

[redacted]

[redacted]

[redacted]

EXTERNAL DISTRIBUTION

70-77. Argonne National Laboratory
78-82. Atomic Energy Commission, Washington
83-86. Brookhaven National Laboratory
87-90. Knolls Atomic Power Laboratory
91-97. General Electric Company, Richland (1 copy to A. H. Bushey)
98-101. Los Alamos
102. Mound Laboratory
103-105. New York Operations Office
106. Patent Branch, Washington
107-121. Technical Information Service, Oak Ridge
122-125. University of California Radiation Laboratory
126-129. Carbide and Carbon Chemicals Company (Y-12)
130-133. E. I. du Pont de Nemours and Company
134-135. New Brunswick Laboratory
136. Savannah River Operations Office
137-138. Westinghouse Electric Corporation
139-141. Idaho Operations Office (1 copy to Phillips Petroleum)
142. North American Aviation, Inc.

[redacted]

[redacted]

Reports previously issued in this series are as follows:

ORNL-686	Period Ending March 31, 1950
ORNL-788	Period Ending June 30, 1950
ORNL-867	Period Ending October 10, 1950
ORNL-955	Period Ending January 10, 1951
ORNL-1088	Period Ending March 26, 1951
ORNL-1113	Period Ending June 26, 1951
ORNL-1129	Period Ending September 10, 1951
ORNL-1233	Period Ending December 26, 1951
ORNL-1276	Period Ending March 26, 1952

[redacted]

[redacted]

CONTENTS

	PAGE
ABSTRACT	ix
PUBLICATIONS	xii
ANALYTICAL CHEMISTRY DIVISION - X-10 SITE	1
RESEARCH AND DEVELOPMENT	1
Ionic Analyses	1
Derivative polarography: Tachometer method	1
Derivative polarography: RC method	1
Derivative polarography: Servo-driven spiral slidewire RC method	2
Analytical applications of high-frequency oscillators. I. High-frequency energy loss meter	3
Development of an automatically recording, internal-standard, flame photometer. I. 100% feedback, impedance-matching, direct-current amplifier	4
Design of a test head for the TBP-Varsol meter, model Q-1282, for determining low concentrations of water in an organic liquid	4
Spectrophotometric determination of zirconium	8
Colorimetric determination of cobalt	8
Instrumentation for the determination of densities of aqueous solutions by the falling-drop method	8
Separation of uranium(VI) from other metals by filter-paper partition chromatography	12
ORNL master analytical manual	12
Plutonium assay work	12
Titration of plutonium with mercurous nitrate	13
Radiochemical Analyses	13
Nuclear properties	13
X rays in strontium and yttrium isotopes	13
X rays associated with decay of thallium-204	14
Measurement of radioactivity	14
Iron-55 in iron-55-59 mixtures	14
Assay of low-level samples	17
Analysis of radioisotopes	17
Impurities in calcium-45 and strontium-85	17
Assay of *K*-capturers	18

[redacted]

[redacted]

[redacted]

Analyses for heavy elements 18
Determination of uranium-232 in uranium-233 product 18
Analysis of cyclotron products 18
Analyses for HRP and ANP 19
HRP 19
ANP Xe problem 19
Solvent extraction methods 20
Activation Analyses 20
Announcement of routine neutron radioactivation analysis service 20
Availability of additional irradiation facilities for neutron activation analysis 20
Extraction of anionic species: Niobium and tantalum 20
Determination of natural uranium (U^{238}) by radioactivation analysis 21
Determination of pesticide residuals (as chloride) in milk and milk products 21
Determination of cesium in rubidium carbonate 22
Applications of activation analysis 23
Spectrochemical Analyses 23
Detection of technetium 23
Determination of traces of cesium in rubidium by flame excitation 24
Determination of traces of zirconium in hafnium 25
Inorganic preparations 26
Solid solutions of uranium trihalides in lanthanum halides 26
Phosphors 27
Other preparations and purifications 27
Analytical Control of the HRE Solution 27
Princo Densitrol 27
Continuous colorimetric analysis of UO_2SO_4-H_2O reactor fuel systems 27
Optical and Electron Microscopy 27
Microscopy of oxide films and crystallographic studies for the HRP 27
Microscopy of metals 29
Other work 29

SERVICE ANALYSES 29

Ionic Analyses 29
Radiochemical Analyses 29
Activation Analyses 31
General Radiochemical Analyses 31

[redacted]

[redacted]

[redacted]

General Analysis Laboratory 31
Laboratory and Semi-Works Control 32
Pilot Plant Control 33
HRE Analyses 33
Isolation Analyses 33

ANALYTICAL CHEMISTRY DIVISION - Y-12 SITE 37

RESEARCH AND DEVELOPMENT 37

Analysis of Alkali Hydroxides 37
Vanadium 37
Electrodeposition of Bismuth on Aluminum 38
Separation of Phosphate from Uranium, Iron, Aluminum, and Calcium 38
Analytical Studies of Reactor Fuels and Their Components 41
Determination of major components of fluoride eutectics 42
Impurities 43
Analysis of components of fluoride eutectics 44
Analysis of Uranyl Sulfate Solutions 46
Free acid 46
Uranium(IV) 46
Nickel 46
Carbon 48
Zirconium 49
Tungsten 51
Analysis of Thorium Slurries 51
Solubility Studies 53
Quality Control 54
General Analytical Laboratory 54
HRP Analytical Laboratory 54
ANP Analytical Laboratory 56
Analytical Laboratories (X-10) 57

SERVICE ANALYSES 58

Analytical Services for the ANP Project 58
Analysis of fluoride salt fuels and coolants 58
Analysis of nickel alloys and high-nickel steel 58
Analysis of fluoride salts to be used for preparing coolants and fuels 59
Analysis of miscellaneous compounds 59
Analysis of Ores and Related Materials 59
Analysis of Metals and Alloys 59
Analytical Services for the HRP 60

[redacted]

[redacted]

[redacted]

ABSTRACT

ANALYTICAL CHEMISTRY DIVISION
X-10 SITE

Two new methods of resistance-capacitance (RC) derivative polarography and further work on the tachometer method are discussed. The two RC methods are designed to effect better resolution of the derivative polarograms through amplification to make possible the use of a lower RC product and provision of a low-impedance source. In the new circuits an amplifier is used to amplify the signal across the polarograph current-measuring resistors and to transform impedances so that the amplifier output will be a low-impedance source for the RC derivative circuit, and a servo-driven spiral slidewire is used to obtain d-c voltage amplification by electromechanical means. Even though the tachometer method is shown to have inherent disadvantages, it does record a wave peak that is a close approximation to the true derivative of a polarographic wave, an advantage that precludes elimination of the method.

Several new instrumental methods are described. A high-frequency loss meter, designed by the ORNL Instrument Department, is being evaluated for determining the concentration of various salts in aqueous solutions. Plans for the development of an automatically recording, internal-standard, flame photometer are presented. A dielectric method for determining water in organic liquids is discussed. A new instrument is being tested for the precise measurement of the time of fall of a drop in the procedure for determining the densities of aqueous solutions. The new instrument will be useful in the analysis of D_2O-H_2O mixtures. Circuit diagrams and illustrations are given to describe these new instruments.

Spectrophotometric procedures are proposed for the determination of zirconium in fuel eutectic mixtures by use of Thoron [1-(*o*-arsonophenylazo)-2-naphthol-3,6-disulfonic acid] and for the determination of cobalt in alloys by the use of sodium diethyldithiocarbamate. A new method of preparing iron-free ceric sulfate for use in automatic, micro, Redox titrations is presented.

X rays have been found in strontium and yttrium radioisotope preparations. These x rays do not result from *K*-capture. It has been shown that Tl^{204} decays about 2% by *K*-capture and 98% by beta emission. The determination of Fe^{55}, alone, and in the presence of Fe^{59} is discussed. The use of the scintillation spectrometer to test the purity of radioisotope preparations is described, and ORNL methods for assay of *K*-capture radioisotopes are tabulated. Uranium-232 has been detected and determined in a U^{233} preparation. Analytical assistance is being given to the group determining yields of various nuclides in proton-induced fission of uranium. Methods are given for routine radiochemical analyses for the HRE, and further data on the ANP xenon problem are furnished.

[redacted]

[redacted]

The applications of activation analysis to the analysis of milk for the pesticide toxaphene and to the determination of natural uranium and of cesium in rubidium carbonate are described. The scheduled public announcement of radioactivation analysis service is indicated.

Spectrochemical procedures are described for determining traces of cesium in rubidium by flame excitation and traces of zirconium in hafnium. Detection limits for technetium lines by the copper spark technique are tabulated.

A report is made of the initial work on the preparation of solid solutions of uranium trihalides in lanthanum halides.

Developmental work on continuous analytical control for the HRE continued with the testing of the lower-temperature Densitrol unit by using the experimental stainless steel plummet No. 1 and with the initial investigation of the differential technique for the continuous spectrophotometric analysis of uranyl sulfate-water reactor fuel systems. The results of microscopic and electron diffraction studies of interest to the HRP of the effect of molybdate on the formation of oxide films on type 347 stainless steel are discussed.

The unusual problems encountered in the service analytical work, for example, identification of radioelements, determination of water and corrosion products in strontium hydroxide, and determination of U^{233} in samples containing thorium, aluminum, and protactinium, are discussed. A tabular summary of the service work is presented.

ANALYTICAL CHEMISTRY DIVISION
Y-12 SITE

The development of methods for the determination of submicrogram quantities of impurities in alkali hydroxides has continued. A highly sensitive method for the determination of vanadium, which depends on the determination of the ferrous ion produced in an oxidation-reduction reaction with vanadium, was tested with favorable results. A method that is entirely satisfactory for the concentration of vanadium has not yet been found.

The electrodeposition of firm, thin plates of bismuth on aluminum has been accomplished by a method that involves a careful pretreatment of the surface and rigid control of conditions during electrolysis.

An ion-exchange method has been developed for the separation of phosphate from cations in the analysis of phosphate ores. This method will greatly facilitate the determination of the cations by eliminating the interference of phosphate.

The replacement of beryllium fluoride, a major component of fluoride reactor fuels, by zirconium fluoride has necessitated a review of the analytical methods concerned. It was necessary to determine if the analytical methods that have been used for previous fuels are also applicable to the new fuels. Methods for the isolation and determination of total alkali metals, and of sodium and potassium individually, have been improved. Improvements have been made in methods for the colorimetric determination of iron, chromium, and nickel. The use of silver peroxide, or persulfate catalyzed by silver ion,

[redacted]

[redacted]

[redacted]

as an oxidant for chromium in the diphenylcarbazide method represents an improvement over previous methods.

A volumetric method for the determination of zirconium in fluoride fuels, which depends on the formation of the zirconium fluoride complex, appears highly promising, although this investigation is not yet complete.

The reaction between bromine trifluoride and metallic oxides will be studied as a method for the determination of oxygen in fluoride fuels. Suitable apparatus for carrying out this reaction has been designed and will be constructed.

A satisfactory method has been found for the determination of total sulfur in fluoride fuels and their components, and a method has been developed for the determination of zirconium oxide in zirconium fluoride, which depends upon the insolubility of the oxide in certain acids. The determination of traces of water in fluoride salts is also being studied.

Studies of methods for the determination of various impurities in uranyl sulfate solution have continued. Optimum conditions for the spectrophotometric determination of uranium(IV) in a phosphoric acid medium were investigated, and the precision of a wet combustion method for the determination of carbon in a uranyl sulfate solution has been improved.

The diphenylglyoxime method for the colorimetric determination of nickel in uranyl sulfate solution has been studied intensively in order to improve its accuracy and precision. Conditions have been found under which significant improvements can be achieved. The investigation of the chloranilic acid method for the determination of zirconium in uranyl sulfate solution has continued. It now appears that trace quantities of zirconium can be determined in the presence of substantial quantities of uranium by proper choice of conditions.

Although the investigation is not complete, a method has been developed for the colorimetric determination of thorium by means of chloranilic acid, which is a sensitive reagent for thorium.

Studies of the solubility of $RuOH_4$ and of NiF_2 in uranyl fluoride solutions have been conducted.

The analytical service work consisted of 38,513 determinations, representing an increase of 28% over that of the previous quarter. By projects, the contributions of the total work load were as follows: HRP, 34%; ANP, 28%; Raw Materials, 33%; other, 5%.

The analytical work for each of the major projects is briefly reviewed and the distribution by project is presented in Table 22.

[redacted]

[redacted]

[redacted]

PUBLICATIONS

ANALYTICAL CHEMISTRY DIVISION - Y-12 SITE

D. L. Manning, W. K. Miller, and R. Rowan, Jr., *Methods of Determination of Uranium Trifluoride*, ORNL-1279 (May 22, 1952).

J. C. White, W. J. Ross, and R. Rowan, Jr., *The Determination of Oxygen in Sodium*, ORNL-1286 (May 23, 1952).

[redacted]

[redacted]

ANALYTICAL CHEMISTRY DIVISION - X-10 SITE

RESEARCH AND DEVELOPMENT

IONIC ANALYSES

P. F. Thomason

Derivative Polarography: Tachometer Method (D. J. Fisher, M. T. Kelley). In a previous quarterly progress report,[1] it was stated that for a constant polarographic wave slope, the instantaneous, damped, tachometer output is not constant but varies above and below an average value that is related directly to the slope. This fluctuation has been reduced slightly by changing the Brown balance motor in the ORNL polarograph, model Q-1160, from a 4.5-sec (transit time) motor to a 12-sec motor. Also, a new tachometer with minimum brush noise was installed. The amount of RC damping of the tachometer output voltage cannot be increased to remove these fluctuations, for the recorded peak is then affected also. It was found that the base line of the derivative peak has less fluctuation when a 0- to 5-mv-range Brown recorder is used in the ORNL polarograph, model Q-1160, than when a 0- to 1-mv-range recorder is used.

It was concluded that the major disadvantage of the tachometer method is the inherent base-line fluctuations that result from random hunting movements of the Brown balance motor. Such fluctuations are not so great as to eliminate the method entirely, since the polarographic wave peak recorded in this method is a close approximation to the true derivative of the polarographic wave. It is intended to develop the RC method further (by use of an amplifier) so that it also will give a close approximation to the true derivative. Since the RC method eliminates certain troublesome electromechanical linkages, it provides a smooth base line that is better than that obtained with the tachometer method.

Derivative Polarography: RC Method (M. T. Kelley, D. J. Fisher). The RC method of derivative polarography has been reported in previous progress reports.[2,3] The developmental work carried out since the last report is summarized below.

RC-method derivative polarograms of better resolution than those reported earlier should result if the following conditions are met: (1) the input to the RC derivative circuit is a low-impedance source, (2) the voltage across R is negligible with respect to the input (source) voltage, (3) the output circuit does not load the derivative circuit, and (4) the RC product (time constant) is optimum.

The first three conditions can be met by use of a specially designed amplifier to amplify the signal across the polarograph current-measuring resistors and also to transform impedances so that the amplifier output will be a low-impedance source for the RC derivative circuit. The RC derivative circuit will follow this amplifier. J. P. Palmer and L. A. Meeks of the ORNL Instrument Department are currently developing a suitable d-c amplifier for this purpose. The amplifier must have an extremely low noise output, since its output feeds into a derivative circuit; also, it should accept a low-level signal.

---

(1) M. T. Kelley and D. J. Fisher, "Derivative Polarography: Tachometer Method," *Analytical Chemistry Division Quarterly Progress Report for Period Ending March 26, 1952*, ORNL-1276, p. 7.

(2) D. J. Fisher and M. T. Kelley, "Differential Polarography," *Analytical Chemistry Division Quarterly Progress Report for Period Ending December 26, 1951*, ORNL-1233, p. 1.

(3) M. T. Kelley and D. J. Fisher, "Derivative Polarography: RC Method," *op. cit.*, ORNL-1276, p. 10.

The feasibility of using such an amplifier was investigated. The output of the polarizing unit of the ORNL polarograph, model Q-1160, was fed into an ORNL high-impedance preamplifier, model Q-1160-6, that was connected to a Leeds and Northrup, No. 9835-A, stabilized, d-c, microvolt, indicating amplifier. An external feedback loop was employed. A 0- to 5-mv-range Brown Electronik recorder was used to record the derivative output. The recorded derivative peaks were at least as symmetrical as those obtained by the tachometer method and were more symmetrical than those obtained by the RC method without an amplifier, that is, there was less time delay, since it was possible with the amplifier to use a lower RC product. Similarly, the peak width at half-height was equal to that obtained with the tachometer method and less than that obtained without the amplifier. The base line was good. Although the design requirements for this amplifier are severe, it is felt that the amplifier will provide greatly improved derivative polarograms.

The fourth condition has not been discussed explicitly in previous reports. The random noise pulses in the voltage across the polarograph current-measuring resistors are generally of higher frequency than those of the polarographic wave itself. As the RC product is decreased, the signal-to-noise ratio therefore tends to decrease. This is one design consideration that determines the lower limit of an optimum RC product. In addition, a second design consideration applying to the lower limit is that the derivative output magnitude must decrease as the RC product decreases, and the output must be sufficient for recording. The design considerations determining the upper limit of the RC product are shown by the following circuit:

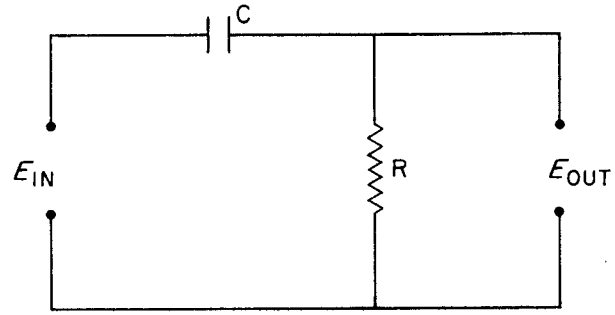

and the equation

$$E_{out} = RC \frac{dE_{in}}{dt} (1 - e^{-t/RC}) .$$

This equation states that the output voltage of the derivative circuit, E_{out}, lags in time t behind dE_{in}/dt when dE_{in}/dt is changing, particularly if the RC product is large. As the RC product is increased, E_{out} for a given dE_{in}/dt increases, but the response is delayed. The optimum value of RC, by this consideration, is that which results in a maximum value of E_{out} for an allowable time lag. It is expected that the optimum value of RC is of the order of 1 sec under the present experimental conditions. This reduction from an RC product of 10 or 20 sec will be made possible by the amplifier.

Derivative Polarography: Servo-Driven Spiral-Slidewire RC Method (M. T. Kelley, D. J. Fisher). The object of this new method of RC derivative polarography is to accomplish d-c voltage amplification by electromechanical means so that a lower RC product may be used in a RC derivative circuit following this amplifier. This source for the derivative circuit has low impedance, as required by theory. The derivative polarograms obtained by this method were evaluated in comparison with those obtained by other methods.

The balance slidewire of the Brown Electronik recorder in the ORNL polarograph, model Q-1160, is of the straight type. A 20-ohm Brown spiral slidewire was mechanically mounted in

the usual manner but was not connected electrically to the servo system. The position of the slider is determined at all times by the position of the recorder balance motor, that is, determined at balance by the current through the current-measuring resistors in the polarizing unit of the polarograph. A d-c voltage of 250 mv from a battery was applied across the ends of the spiral slidewire. The potential difference between one end and the slider of the spiral slidewire is directly proportional, at balance, to the current through the current-measuring resistors. Also, the potential difference has been amplified about 50 times and is a low-impedance source. The derivative output was recorded by an external, 0- to 10-mv-range Brown Electronik recorder. Under these conditions, a RC constant of 5 sec could be used in the derivative circuit following this amplifier.

There was considerable random noise in the derivative output; that caused by the discontinuities of the slidewire was removed by a RC damping filter. However, the derivative-peak base line fluctuated. This fluctuation is caused, in part, by the mechanical transmission of the hunting of the Brown balance motor to the spiral slidewire, in the same manner as it is transmitted to the tachometer in the tachometer method of derivative polarography. It is therefore concluded that the results obtained by this method are not so satisfactory as those expected by use of an amplifier with the RC method of derivative polarography.

Analytical Applications of High-Frequency Oscillators. I. High-Frequency Energy-Loss Meter (D. J. Fisher, E. B. Wagner, M. T. Kelley). A high-frequency energy-loss meter built by K. H. Kline, ORNL Instrument Department, was submitted to the Ionic Analyses group for application evaluation. A functional diagram of this instrument, which is similar, in principle, to a *Q* meter, is shown in Fig. 1. The instrument is to be evaluated for two general applications: (1) determination of the solute concentration of a specific solution by means of a calibration curve and (2) titration end-point indication, for example, for nonaqueous systems in which immersed electrodes are troublesome. The second general application was suggested by H. H. Willard of the University of Michigan.

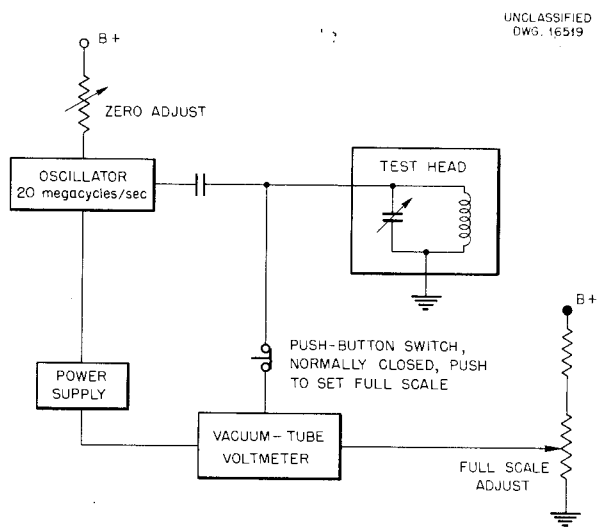

Fig. 1. Functional Diagram of a High-Frequency Energy-Loss Meter.

The solution is contained in an 18- by 150-mm test tube that is held in fixed position in the coil of the test head, and the solution volume is held constant at 15 ml. The vacuum-tube voltmeter is standardized by means of the push-button and full-scale-adjustment potentiometer. A liquid selected as the energy-loss standard (ordinarily the solvent) is put in the test head; the test-head capacitor is adjusted to resonance (shown by a minimum reading of the vacuum-tube voltmeter); and the oscillator output is adjusted to a zero vacuum-tube voltmeter reading with the zero-adjustment potentiometer. The vacuum-tube voltmeter reading at

resonance of the test-head circuit with other solutions in the test-head coil is an indication of the energy loss introduced by those solutions relative to that introduced by the liquid selected as loss standard. The zero and full-scale settings are rechecked from time to time. The vacuum-tube voltmeter reading is normally directly proportional to the voltage developed across the test-head resonant circuit, and it is indicative of the equivalent shunt resistance across the coil.

This arbitrary loss indication or value is primarily dependent on energy loss within the solution. Energy loss at radio frequencies includes the phenomenon of conductivity, as well as all other sources of loss of high-frequency energy as heat. The solution dielectric constant should not be sensed by the coil, except through its distributed capacitance. That this is the case in practice is shown by the capacitance of the test-head capacitor at resonance being nearly the same for air as for water contained in a test tube inside the test-head coil. A Faraday shield could be used to completely insensitize the test-head coil to the solution dielectric constant.

Distilled water and solutions of three different salts have been investigated: (1) KCl from 0.0025 to 2.5 *M* (in 13 steps), (2) LiOH from 0.0025 to 3.6 *N* (in 18 steps), and (3) UO_2SO_4 solutions containing H_2O_2.

In general, it is found desirable to increase the sensitivity of this device, if possible. K. H. Kline is now working on the problem. The instrument is of interest because it shows promise of usefulness for the analysis of solutions of several molar solute concentrations, as well as for very low concentrations.

It is planned to investigate, develop, and evaluate, in terms of the two general applications mentioned, several other types of instruments. Such instruments as a grid dip oscillator, a special bridge for measuring capacitance and resistance of a glass, capacitance-compensated, concentric-cylinder capacitor cell, and an oscillator coupled to a series resonant-circuit type of sensing element are expected to be included.

Development of an Automatically Recording, Internal-Standard, Flame Photometer. I. 100% Feedback, Impedance-Matching, Direct-Current Amplifier (M. T. Kelley, D. J. Fisher). It is planned to develop an automatically recording, internal-standard, flame photometer. The instrument will use two photomultiplier tubes: one will be mounted at the monochromator of a Beckman spectrophotometer, model B, that will be adjusted to illuminate the photomultiplier with an emission wavelength of the flame-excited substance to be determined; the other will be illuminated with a flame background or with an emission wavelength of a substance added to the unknown solution as an internal standard. The electronic circuit will present the ratio of these illuminations on a Brown Electronik recorder so that fluctuations of excitation will be automatically compensated.

At present, one component of the flame photometer, a 100% feedback, chopper-stabilized, impedance-matching, d-c amplifier, has been built. It is stable, has low zero offset and low noise level, and its output is equal to its input. The circuit is given in Fig. 2.

Design of a Test Head for the TBP-Varsol Meter, Model Q-1282, for Determining Low Concentrations of Water in an Organic Liquid (H. H. Miller, D. J. Fisher). In response to a request, a method for determining low concentrations (0.1 to 1 vol %) of water in an organic liquid was developed by which the dielectric constant of the solution was measured with the TBP-Varsol meter, model

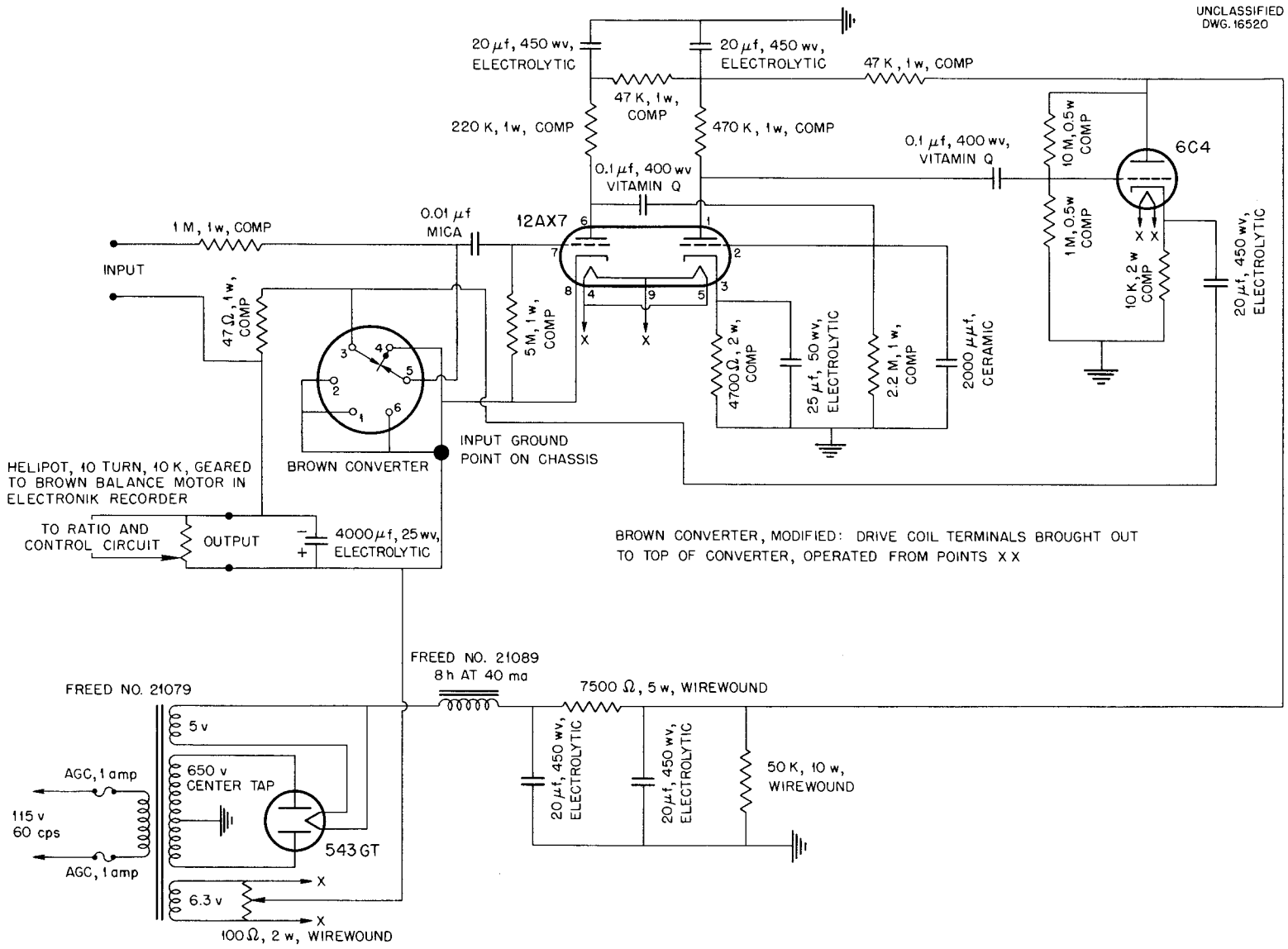

Fig. 2. Circuit of 100% Feedback Impedance-Matching DC Amplifier.

Q-1282. A new test head for use with the meter was developed, since the one supplied with the instrument was unsuitable. The new test head can be used in the determination of the concentration of the solute in any low-conductivity solution that has a dielectric constant within the range of the test head, if the concentration of the solute in the solution is directly related to the dielectric constant of the solution.

The organic solution in this case was corrosive; so a dielectric constant cell similar to that described by E. H. Sargent and Company[4] was constructed. The cell consists of concentric cylinders that are, in order, a metal (silver), a glass, a solution, a glass, and a metal cylinder, with a small stopcock leading to the bottom of the cylinder of liquid. It has a volume capacity of about 16 ml, and the liquid is in contact with glass only. The cell, shown in Fig. 3, was constructed of one test tube within another and has silvered surfaces that constitute the two metal cylinders. The equivalent electrical circuit of this cell is shown in the following sketch.

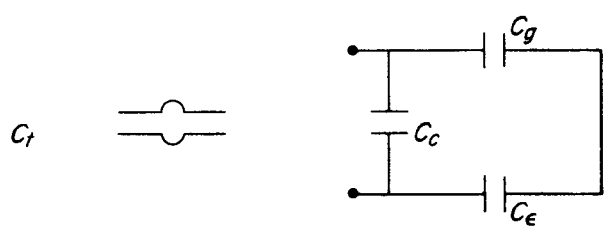

The solution is assumed to contribute negligible energy losses in this case. The capacitance of the cell measured at the terminals, C_t, is given by the equation

$$C_t = C_c + \frac{C_g C_\epsilon}{C_g + C_\epsilon},$$

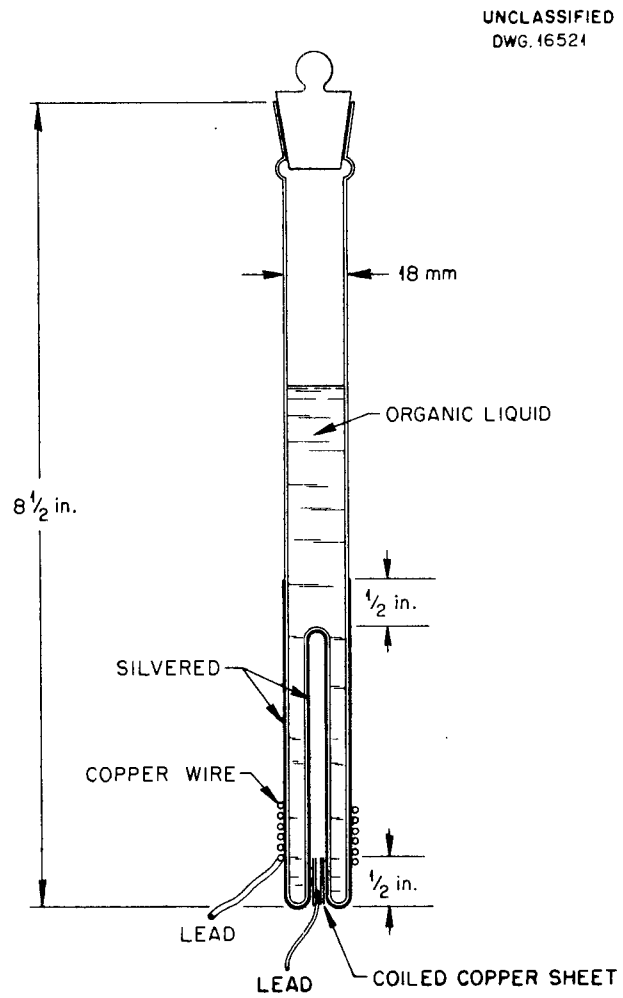

Fig. 3. A Concentric-Cylinder Dielectric-Constant Cell.

in which

C_t = capacitance ($\mu\mu$f) of the cell measured at terminals of cables attached to cell,

C_c = capacitance ($\mu\mu$f) of cables,

C_g = capacitance ($\mu\mu$f) of glass cylinder,

C_ϵ = capacitance ($\mu\mu$f) of solution cylinder whose dielectric constant is ϵ.

The value of C_g for the specific cell built is 72.7 $\mu\mu$f, which was determined by measuring the capacitance of the mercury-filled cell with a General Radio R-F capacitance meter, type 1612-AL. The value of C_ϵ with air in the cell was 9.4 $\mu\mu$f. The

(4) E. H. Sargent & Co., "Chemical Oscillometer, Model V," *Scientific Apparatus and Methods*, Vol. 5, p. 4 (Winter 1951-52).

capacitance of the solution cylinder, C_ϵ, is given by the equation

$$C_\epsilon = \frac{C_g(C_t - C_c)}{C_g - C_t \pm C_c} .$$

The dielectric constants of a series of standard solutions will be measured in the cell, and a calibration curve will be prepared for use in this analysis.

The circuit of the test head is shown in Fig. 4. The test head constitutes the frequency-determining portion of a Clapp oscillator that is connected to a buffer-amplifier, which, in turn, is connected to a discriminator circuit; the output of the circuit is indicated by a center-scale vacuum-tube voltmeter. The vacuum-tube voltmeter reads zero when the test head is tuned to resonance at 460 kcps. A variation in cell capacitance will change the frequency of the oscillator and cause a displacement of the vacuum-tube voltmeter. The magnitude of the variation in cell capacitance is determined by retuning C_2 to resonance,

[redacted]

DWG. 16522

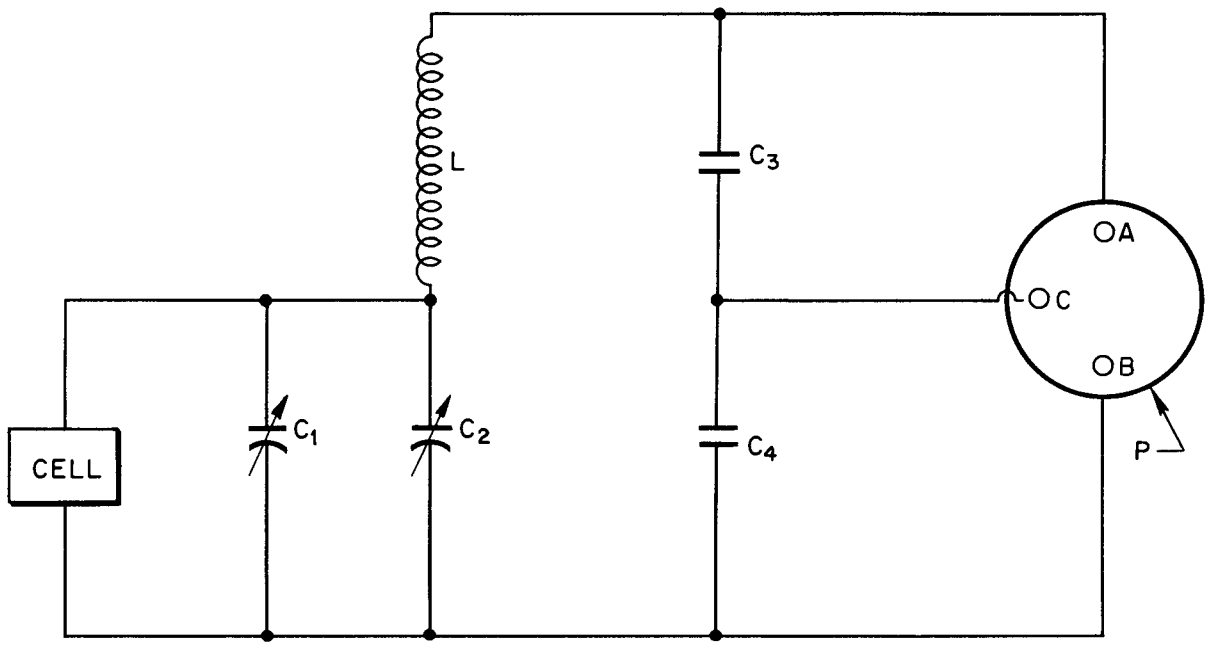

RESONANT FREQUENCY, 460 kcps

C_1	CAPACITOR, 100 $\mu\mu$f, VARIABLE, AIR, DOUBLE-BEARING, RANGE SET
C_2	CAPACITOR, 20 $\mu\mu$f, VARIABLE, AIR, DOUBLE-BEARING, RETUNE
C_3, C_4	CAPACITOR, 900 $\mu\mu$f, ZERO TEMPERATURE COEFFICIENT, CERAMIC
L	INDUCTOR, 1.75 in. IN LENGTH, NO. 34 P.E., CLOSE-WOUND ON 1.25-in.-DIA. COIL FORM
P	CABLE PLUG, FEMALE, AMPHENOL AN 3106A 10SL 3S

Fig. 4. Electrical Circuit of the Test Head for Use with TBP-Varsol Meter Q-1282.

which is indicated by a zero reading on the vacuum-tube voltmeter. The change in cell capacitance is therefore equal to the change in capacitance of C_2 necessary to return the test head to resonance.

The sensitivity of this test head was determined in the following manner. A 10-$\mu\mu$f capacitor was connected to the cell terminals. This required a change in the C_2 dial reading of 70 out of 100 total dial divisions to return to resonance.

Preliminary data have been obtained. Some organic liquid that was represented as anhydrous was secured and used to prepare standards containing up to 1 vol % of water. There was an increment of C_2 (at resonance) of 42 dial divisions, which can be divided visually into thirds. The calibration curve is not linear and the nonlinear character is believed to result from the organic-aqueous mixtures.

Spectrophotometric Determination of Zirconium (A. D. Horton). A spectrophotometric method employing Thoron reagent has been developed for the determination of zirconium in ANP fuel eutectic. The method will be discussed in detail in a forthcoming topical report.

Colorimetric Determination of Cobalt (J. M. Chilton). To aid in the analysis of special alloys and the determination of the specific activity of radioactive isotopes, a search was begun for a sensitive colorimetric procedure for the determination of cobalt. The method of Young and Hall[5] that employs the extraction of the cobalt-thiocyanate complex with an immiscible organic solvent appeared to be the most promising one available. The procedures for the development of the cobalt-thiocyanate complex and its extraction were followed exactly as described. The wavelength of maximum absorption of the complex was found to be 620 mμ. The amount of cobalt per aliquot of sample extracted should be 30 to 300 μg (approximately 0.06 to 0.6 absorbancy). By use of the radioactive Co^{60} tracer, it was found that 10 to 20% of the cobalt remained in the aqueous layer after extraction; lower pH values than the optimum called for in the procedure increased this amount. Also, it was found that the aqueous layer began to develop various shades of yellow and brown shortly after all the reagents were mixed. This was probably caused by the decomposition of the $Na_2S_2O_3$ in the acid solution and led to quite erratic results unless the complex was extracted immediately. This procedure was not considered further because of the unreliable results obtained.

The extraction of cobalt diethyldithiocarbamate with an organic solvent was investigated next. This procedure has been proposed for the separation of cobalt but has not been developed as a quantitative method. Preliminary results indicate that copper is the only metal that extracts under the same conditions. Under proper conditions, the extraction is essentially 100% complete, as shown by the radioactive-tracer technique. The useful range of cobalt concentration when 10 ml of extracting solvent is used is approximately 2.5 to 25.0 μg per aliquot extracted. Work on this method is continuing.

Instrumentation for the Determination of Densities of Aqueous Solutions by the Falling-Drop Method (M. T. Kelley, P. F. Thomason, W. Pruessner). The falling-drop method of density determination is at present used for routine analysis of H_2O-D_2O mixtures and of aqueous inorganic solutions. If certain experimental inconveniences are overcome, the method should have much wider use, since it is a rapid and potentially precise

[5] R. S. Young and A. J. Hall, "Colorimetric Determination of Cobalt with Ammonium Thiocyanate," *Ind. Eng. Chem., Anal. Ed.* **18**, 264 (1946).

method for the determination of density on a micro scale. The principle of the method and the progress made in overcoming the sources of error and inconveniences of the method are discussed.

A sphere falling through a viscous medium will accelerate until the dragging force resulting from viscosity equals the accelerating force of gravity. The terminal velocity, V, then achieved is given by Stokes' law as

$$V = \frac{2gr^2(d_1 - d_0)}{9\eta},$$

where

g = acceleration of gravity,
r = radius of sphere,
d_1 = density of sphere,
d_0 = density of medium,
η = viscosity of medium.

In the derivation of this equation, however, it was assumed that the falling rate (i.e., terminal velocity) is extremely slow and that the sphere is rigid. Neither of these conditions is fulfilled when a liquid drop falls at a convenient rate through a viscous medium. A rigid sphere of 10-μl volume does not follow Stokes' law if the falling time is less than 2 min/cm (taking the density of the medium as 1.0 g/ml and its viscosity as 0.02 poise). This critical speed, taken as that at which a 1% deviation from Stokes' law occurs, increases as the drop becomes smaller, but even a sphere of 1-μl volume must fall slower than 1 min/cm. For a nonrigid sphere that otherwise satisfies the conditions of Stokes' derivation, a multiplier, k, must be inserted in the equation. This multiplier is a function of only the relative viscosities of the drop and the medium; so the falling rate remains proportional to density.[6] At higher speeds the drop is warped from spherical shape, and there is turbulence both within the drop and in the adjacent viscous medium. In developing an analytical procedure, however, there is usually no interest in whether a phenomenon "obeys" a law, but only in whether its behavior is reproducible. Thus, the upper tolerable limit of falling rate is that at which erratic behavior begins.

In the present method an aqueous drop of fixed volume (in the range of 5 to 50 μl) is released into an immiscible liquid contained in a tube. The time-of-fall of the drop between two marks on the tube is measured with a stop watch. The density of the drop is determined by comparing this time with the falling times of drops of known density as shown on a calibration curve. It has been found that the density of H_2O-D_2O mixtures is very nearly a linear function of composition of the mixture.

The Analytical Division was asked to adapt the method to the analysis of heavy water containing up to 10% D_2O, with an accuracy of ±0.1% D_2O. The specific gravity of pure D_2O is 1.10 (25°C/25°C), which is a change of only 0.10 g/ml from pure H_2O to pure D_2O. An analysis accuracy of 0.1% in D_2O concentration requires the measurement of density to 0.0001 g/ml, which is 1 part in 10,000, but since the falling-drop method is sensitive to density difference, the necessary tolerances for the various parameters are not too severe for routine work. As an aid in setting up these tolerances, Stokes' law will be used to approximate the relations between variables. The following discussion is based on the use of *o*-fluorotoluene as the immiscible organic liquid at the temperature at which its density and that of pure protium oxide are the same. The reason for this is that the observed density difference is then

(6) A. C. Merrington, *Viscometry*, chap. IV, Longmans, New York, 1949.

directly proportional to the concentration of D_2O. Under these conditions,

$$\% D_2O \propto d_1 - d_0 \propto \frac{V\eta}{r^2} .$$

If the randomness of each factor is kept less than, say, ±0.1% relative variation, the over-all indeterminacy in the calculation of results, whether explicitly computed or taken from a graph, will be less than the maximum permitted. This 0.1% tolerance is discussed relative to each variable.

Drop Size. Variation in drop size affects not only the r^2 term of the Stokes' law equation but also the terminal velocity, V. Calculations from Stokes' law show that the combined effect is such that an error in drop volume causes a relative error in the calculated concentration that is 1.25 as much as the volume error. Thus the dropping pipet should deliver volumes of the order of 10 μl with a precision even better than ±0.01 μl; this will be difficult to achieve. If drop size cannot be controlled this closely, it will be necessary to use long falling times, and consequently more than one reference liquid will be needed to cover the desired range.

Density. One per cent aqueous solutions of most inorganic salts have densities ranging from 0.0050 to 0.0100 g/ml greater than that of water at the same temperature. Thus the total concentration of solids must be held to less than about 10 ppm if the variations in density from this cause are not to exceed 0.00001 g/ml. The effect of dissolved air is negligible; the greatest density change caused by saturating pure water with air at any temperature is 3.4×10^{-6} g/ml, and this occurs between 7 and 8°C.[7] The usual variation in the oxygen isotopic ratio, $(O^{16})/(O^{18})$, of natural water causes a calculated variation in density of about 5×10^{-6} g/ml;[8] so this, too, is negligible.

The thermal coefficient of expansion of water at 25°C is 0.00026 unit per °C; so the drop temperature must be within 0.04°C of the temperature of the bath during the timing interval. The thermal coefficient of expansion of *o*-fluorotoluene is about 0.0012 unit per °C;[9] therefore the differential coefficient is of the order of 0.0010 unit per °C, and the dropping tube must be thermostated to ±0.01°C. This is not too difficult. It would be convenient to have a regulator in which the point-of-control could be continuously varied, since then the density difference between drop and medium could be maintained at a convenient value by simple adjustment of the regulator. Any drift in the density of the medium could also be compensated.

Viscosity. According to Kirshenbaum,[10] variations in viscosity of *o*-fluorotoluene caused by temperature changes are small relative to the change in density. The viscosity of the *o*-fluorotoluene may change on aging, although this has not been reported.

Terminal Velocity. The terminal velocity of the drop is found by measuring the time required for the drop to fall a fixed distance through the medium. The method of timing must, of course, be accurate to ±0.1%. This cannot be achieved conveniently by visual observation of the time-of-fall of the drop because the minimum time required for visual response is about 0.1 sec. This means that the minimum time interval that can be measured by a manually operated stop watch with an accuracy of ±0.1% is over 1 minute.

(7) N. E. Dorsey, *Properties of Ordinary Water-Substances and All Its Phases*, p. 198, Reinhold, New York, 1940.

(8) I. Kirshenbaum, *Physical Properties and Analysis of Heavy Water*, NNES, Div. 3, Vol. 4A, p. 416, McGraw-Hill, New York, 1951.

(9) *Ibid.*, p. 341.

(10) *Ibid.*, p. 343.

Since the time-of-fall of the drop will vary over at least a tenfold range (if only one reference medium is used to cover the entire range), the time of observation could well extend to over 10 minutes. Since this is inconvenient, it would be desirable to have an automatically actuated timer. The tenfold variation in falling time means that any conventional timer selected must indicate to five places, which is difficult. Ten times as much relative error can be tolerated if the timer measures the reciprocal of elapsed time rather than time itself, since then as the falling rate increases, the accuracy of timing (in seconds) also increases. A device for measuring the reciprocal of elapsed time is now in use and will be described later.

Drop Delivery Procedure. The procedure for introducing a drop of sample into the dropping tube requires some comment. The pipet itself consists of a glass capillary tube that is drawn down to a fine bore and cut; then the tip is ground to an acute conical shape. A Teflon sleeve is forced over the tip, and the composite tip is ground off square in such a manner that a small ring of glass surrounded by Teflon is exposed. This arrangement[11] provides a wettable surface for supporting the aqueous drop, yet prevents the drop from spreading up the side of the pipet tip. The sample is drawn into the pipet, and the tip is placed below the surface of the immiscible organic liquid. The desired volume of sample is discharged from the tip, to which it clings as a drop. The pipet is then raised, and when the tip breaks through the surface of the organic liquid, the drop falls. The upward travel of the pipet must be slow and free from vibration to ensure reproducible drop size. A pipet, mounted on an electric lift, has been designed and built by H. Hemphill of the Analytical Chemistry Division. It is expected that this pipet will perform satisfactorily.

Temperature Control of Thermostat. If satisfactory, a commercial mercury regulator will be used to control the temperature of the water bath. However, a regulator using a Thermistor bridge detector and incorporating proportional control has been designed and will be built if necessary.

Rate-of-Fall Measurement. The arrangement for measuring the rate-of-fall of the drop consists of an optical system with a phototube pickup, a pulse amplifier and switching circuit, and a timer. The optical system is shown schematically in Fig. 5. A 25-w Zirconarc light source is enclosed in a tube, the forward end of which is closed by a plug with a variable slit in its center. The slit is adjusted to about 1-mm width and is about 10 mm long. Light from this source is passed through a square dropping tube 1 by 1 cm (inside) and about 20 cm long. The light beam is again passed through the tube at a position about 8 cm lower by reflection through a double 90-deg

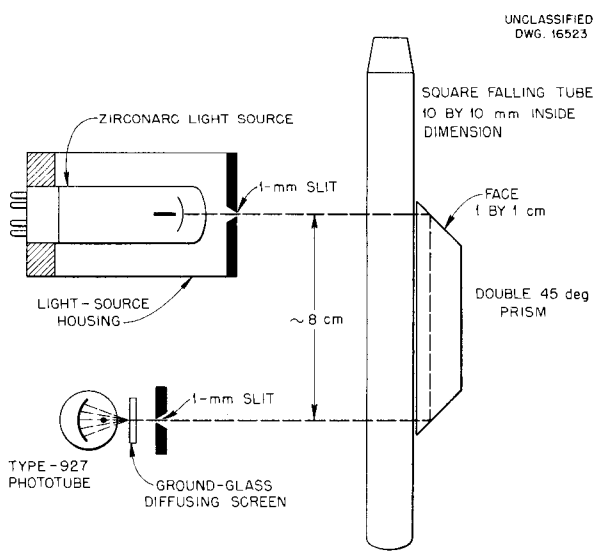

Fig. 5. Optical System for Falling-Drop Apparatus.

(11) P. F. Thomason, secret research notebook, No. CL-1554, p. 164.

prism. The beam then strikes a second 1-mm slit attached to a phototube type 927. A glass plate, ground to a rough surface on the phototube side, is placed between the phototube and slit to spread the light more evenly over the sensitive surface. Since this system requires no focusing, the location of parts is not critical. The passage of a drop through the light beam momentarily decreases the current through the phototube. This output is fed into an amplifier, and the pulse is used to actuate a timer. The timer itself consists of a vacuum-tube voltmeter that measures the changing potential on a condenser, which is charging through a fixed resistor.

Details of these circuits will not be given until the entire assembly has been tested, since changes will very likely be made during their evaluation. It can be said, however, that rough measurements indicate that the timer actuation is reproducible to better than 0.005 sec, and the accuracy of the timer appears to be limited only by the difficulty of reading the scale of the vacuum-tube voltmeter to better than 0.2%. A topical report will be issued when tests have been completed.

Separation of Uranium(VI) from Other Metals by Filter-Paper Partition Chromatography (H. P. Raaen, P. F. Thomason). The microseparation of uranium(VI) from 20 of the 24 metals studied has been effected by filter-paper partition chromatography with H_2O-saturated 2-methyltetrahydrofuran containing 2.5 vol % concentrated nitric acid. The work is described in a forthcoming topical report entitled, "Separation of Uranium(VI) from Other Metals by Filter-Paper Partition Chromatography with 2-Methyltetrahydrofuran and Its Quantitative Determination. I. Separation Studies by Use of Radioisotopes." The effectiveness of the separations was determined by use of radioisotopes of the metals and subsequent autoradiography of the chromatograms. The sorption gradient of the separated U^{233} was determined by alpha-count measurements of the chromatograms. The optimum conditions for obtaining a condensed uranium band and for quantitative removal of uranium from the paper strip are described. Of the radioisotopes studied, Ru^{106}-Rh^{106}, Sn^{113}, Sb^{124}, and Hg^{203} were not separated from U^{233}. The Hg^{203} appeared to behave in a manner similar to U^{233}. The alpha-count data are presented graphically, and positive prints of the autoradiographs are shown.

ORNL Master Analytical Manual (H. P. Raaen). Progress is being made on the preparation of the "ORNL Master Analytical Manual." The committees responsible for the preparation of the separate sections of the manual have been activated, outlines for the contents of the sections submitted, and method writing assignments and schedules made. It is expected that a large number of methods will be in draft form by the end of July.

Plutonium Assay Work (F. J. Miller). The procedure for the preparation of cerium(IV) sulfate has been revised to provide for the removal of iron. The solution is now made up in the following manner:

1. Prepare a saturated solution of cerium(III) sulfate.
2. Place in electrolysis cell (Fig. 6).
3. Add 25 ml of mercury.
4. Place stirrer so that it stirs the mercury.
5. Connect the cathode of a d-c power supply to the platinum wire that contacts the mercury.
6. Connect the anode to a platinum wire that dips into a 6 vol % solution of H_2SO_4 in a medium-porosity, fritted-disk tube that extends into the cerium sulfate solution. (The liquid level in this tube must be kept above the level of the cerium sulfate solution.)

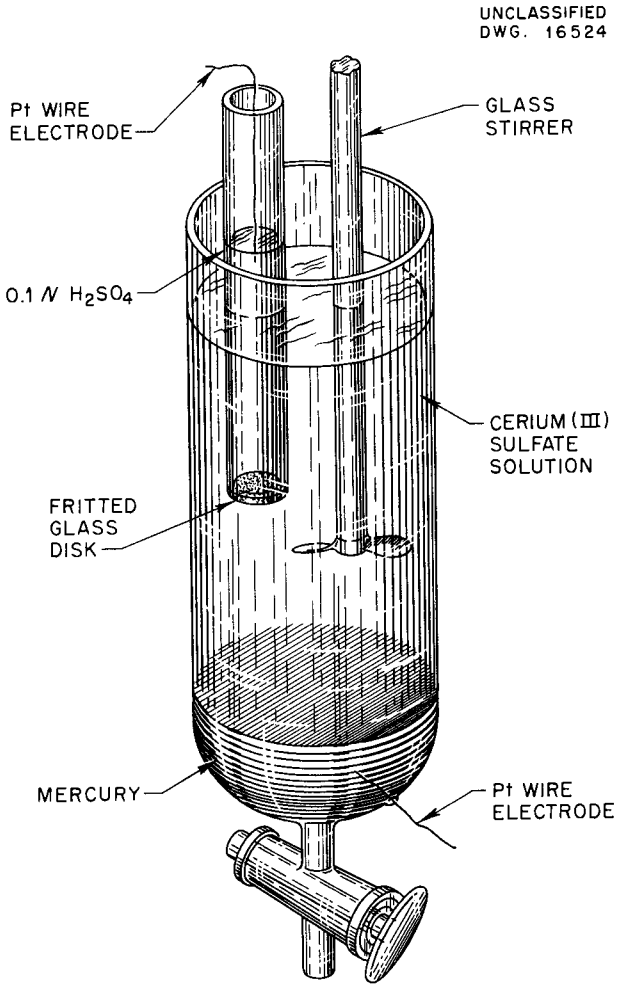

Fig. 6. Electrolysis Cell for the Removal of Iron From Cerium(III) Sulfate Solutions.

7. Electrolyze at 0.5 amp for 30 minutes.

8. Electrolyze at 1.0 amp for 30 min more.

9. Allow the mercury to run out of the cell with the power still on.

10. Reverse the polarity of the electrodes.

11. Electrolyze for 30 minutes. The yellow color of cerium(IV) sulfate solution should appear.

12. Filter the solution through No. 42, Whatman, filter paper.

13. Standardize the solution against As_2O_3 using osmic acid as a catalyst according to the procedure of Smith.[12]

The responsibility for routine assay of plutonium samples by automatic microtitration of plutonium with cerium(IV) sulfate solution has been assigned to the Isolation Laboratory. The necessary equipment has been obtained, and the group has been trained for this operation.

Titration of Plutonium with Mercurous Nitrate (F. J. Miller). Further work is being done on the titration of plutonium with mercurous nitrate.[13]

RADIOCHEMICAL ANALYSES

S. A. Reynolds

Nuclear Properties

X-Rays in Strontium and Yttrium Isotopes (W. S. Lyon and B. Kahn[14]). As a part of a general program of of examination of various product radioactivities produced by and shipped from ORNL, several strontium and yttrium nuclides have been studied with the x-ray proportional-counter spectrometer. The general procedure has been to obtain pure nuclides of high specific activity and to examine their x-ray region. Strontium-85 is an x-ray emitter (*K*-capture followed by gamma) and can thus be used as an energy standard as well as an intensity standard. A source of Sr^{85} of known disintegration rate was examined on the spectrometer, and the area beneath the peak, which was obtained from a plot of counts per minute vs. pulse height, was used to obtain an "efficiency" for these x rays. Samples of Sr^{89}, Sr^{90}, and Y^{90} were then run in an identical manner, the amount of activity having been determined by beta counting. The area under the

(12) G. F. Smith, *Cerate Oxidimetry*, p. 40-42, The G. Frederick Smith Chemical Co., Columbus, Ohio (1942).

(13) F. J. Miller and J. M. Chilton, "Studies of Factors Affecting the Reductimetric Titration of Iron with Mercurous Nitrate," *op. cit.*, ORNL-1276, p. 19.

(14) Health Physics Division.

x-ray peak obtained was evaluated, and the amount of x radiation relative to the total amount of activity present was then calculated. Strontium-90 was separated from Y^{90} by TTA-xylene extraction. Table 1 is a resume of the data obtained.

These data indicate that the x radiation is definitely not from a *K*-capture process. Strontium-89 was used to determine whether the Sr^{90} x ray was caused by Sr^{89} impurities; apparently no more than 0.02% of the Sr^{90} x ray can be ascribed to Sr^{89}. Strontium-90 was counted with various concentrations of Y^{90} to determine the amount of x radiation originating in the latter. Strontium-90 was counted immediately after the Y^{90} separation and again five days later. The amount of x-ray contribution from Y^{90} had not increased more than 0.01%. It is planned to look for the gamma rays from which these x rays must arise (through internal conversion). Inasmuch as these preparations were essentially carrier-free, it is thought impossible that the observed radiation could arise from excitation by beta particles of electrons within the carrier atoms themselves. The effect is too large to be explained in this manner.

X Rays Associated with Decay of Thallium-204 (W. S. Lyon, B. Kahn[14]). It was noted previously[15] that Tl^{204} has approximately 2% x radiation associated with it. Because of the insufficient resolution of the present spectrometer, it has been impossible to assign definitely the source of this radiation, that is, to determine whether it comes from a *K*-capture branching in the Tl^{204} decay or whether it arises from an internally converted gamma ray following the beta transition. Critical absorption measurements with the sodium iodide spectrometer have been made by using Hg^{203} and Au^{198} as sources for comparison. Absorption curves have been obtained with Ta, W, Re, Os, and Ir absorbers. On the basis of these data it appears that Tl^{204} does have about 2% *K*-capture branching. This conclusion checks the reported work of Lidofsky and Wu.[16] It is planned to make critical absorption measurements of the *L* x radiation and to measure again the amount of *K* and *L* x radiation present. These data will be published in a final report. A large amount of significant information regarding the use of sodium iodide crystal spectrometers for this type of identification has been gathered, which should be of considerable use in future work.

Measurement of Radioactivity

Iron-55 in Iron-55-59 Mixtures (W. S. Lyon, D. A. Brown[17]). The absolute measurement of Fe^{55}, which is a pure x-ray emitter, is a most

[15] W. S. Lyon and B. Kahn, "Decay of Thallium-204," *op. cit.*, ORNL-1276, p. 22.

[16] L. Lidofsky and C. S. Wu, "Thallium 204," Sec. VI-A, *Progress Report Nuclear Physics Laboratories, April, May, and June, 1951*, CU-96, p. 26.

[17] DuPont Co.

TABLE 1. X RADIATION ASSOCIATED WITH STRONTIUM AND YTTRIUM NUCLIDES

NUCLIDE	ACTIVITY (dpm)	PULSE HEIGHT AT PEAK (Gain: 4 x 0.5)	X RAY ASSOCIATED WITH BETA ACTIVITY (%)
Sr^{85}	1.73×10^6	25	100 (assumed)
Sr^{89}	9.46×10^6	27	0.63
Sr^{90}	5.80×10^7	27	0.22
Y^{91}	2.52×10^7	29	1.17

difficult problem because there is no simple method for determining the exact number of x-ray quanta being emitted by a particular source. The counting efficiency of most available gases, except the rare gases, is quite poor for x rays, and the low energy of the manganese x ray emitted in the *K*-capture process (5.9 kev) makes it impossible to design a counter window in which the absorption of the x rays is not appreciable. The method of assaying Fe^{55} for shipment has been to compare the counting rate of a known aliquot deposited on polystyrene and counted on a beryllium-window, krypton-methane-filled, beta proportional counter with the counting rate obtained by using a Fe^{55} "standard" supplied to this laboratory some years ago by physicists at MIT. It is almost certain, however, that this standard is incorrect. The method of counting has been to determine the counting rate of sample and standard through a polystyrene absorber and then through an identical absorber covered with 25 mg/cm^2 of vanadium (as V_2O_5). In both cases, 200 mg/cm^2 of beryllium has been placed before the counter tube. Since vanadium is the critical absorber for manganese x rays, the difference between the counting rates observed should be the number of manganese x rays. This method is especially useful when it is desired (as is most often the case) to assay Fe^{55} in the presence of Fe^{59}, since Fe^{59} is a beta emitter with two gamma rays. In this method, the 200 mg/cm^2 of beryllium absorbs all the beta particles, and the small amount of critical absorber allows the gamma rays to pass through essentially unattenuated. The most serious limitation of the method is encountered in the determination of small amounts of Fe^{55} in the presence of large amounts of Fe^{59}. In this case, the result is based on the small difference between two large counting rates. It is desirable to make sure that the radiations being observed are actually x rays from Fe^{55}. Thus it is apparent that the two fundamental problems in the assay of Fe^{55} are the establishment of the absolute disintegration rate of a Fe^{55} source and the establishment of a method which will ensure that small and large amounts of Fe^{55} may be accurately determined in the presence of Fe^{59}.

Considerable work has been done on both parts of this problem. Relative to the first part of the problem, the beryllium-window counter has been calibrated for a number of x-ray emitters, but the value for Fe^{55} fails to fall on the calibration curve. The value for the cross section for production of Fe^{55} by (n,γ) reaction is known from reactor oscillator experiments to be 2.2 barns.[18] Consequently, it was hoped that by exposing several sources of enriched Fe^{54} in the Hanford reactor, together with cobalt monitor to measure the flux, the absolute amount of Fe^{55} produced could be calculated. A suitable aliquot of such a source could then be used to calibrate the counter. This was done by use of an exposure time of 52 days, a decay time of 6 months, three sources of Fe^{54} enrichments, that is, 39, 49, and 87%, and Fe^{58} contents of 0.2, 0.11, and 3.5%. The iron sample was dissolved in 8 *M* HCl, and the iron was extracted by use of isopropyl ether. Samples of purified iron were counted by the method described, and the efficiency was determined by use of the calculated amount of Fe^{55} that was determined from the reactor data. The efficiency so determined was higher than that suggested by the curve by a factor of almost 2.

These data could be explained if the *K*/*L* capture ratio in Fe^{55} is much higher than the *K*/*L* ratio in neighboring *K*-capture nuclides (for example,

[18] H. Pomerance, *Thermal Neutron Capture Cross Sections of Isotopes*, ORNL-1304, p. 6 (June 6, 1952).

Cr^{51}, Mn^{54}, Zn^{65}), but this appears unlikely. Similarly, if the fluorescence yield for Fe^{55} is much greater than for neighboring nuclides, these data are understandable, but this, too, is unlikely. If, however, there should be a resonance for fast neutrons in the cross section for the Fe^{54} production of Fe^{55}, the amount of Fe^{55} produced would be more than that calculated from the cross section as measured by the oscillator. This could be the explanation; and to test it, additional samples of Fe^{54} have been put into the LITR with and without cadmium shielding. These samples will enable the contribution to the total activity by any resonance to be evaluated and corrected for in the calculations. Interest in this problem has been expressed by workers at Brookhaven, Chalk River, and the National Bureau of Standards, and a check solution of Fe^{55} will be sent to each for intercalibration.

Attempts to 4π count Fe^{55} have met with no success in the past.[19] Part of the previous trouble was believed to be caused by poor instrumentation and counters. New counters have been received, and several additional attempts to 4π count Fe^{55} have been undertaken. Two gas mixtures, xenon-10% methane and argon-10% methane at total pressures of 70 and 35 cm, were tried, but the results were disappointing. Only a very short (60 v) plateau was obtained at 70 cm, and no plateau was found at 35 cm. Argon appears to be more efficient for the 4π counting of these x rays than xenon, but neither will give consistent results. Charge effects are noticeable even when thinly plated aluminum-coated films are used.

In regard to the second aspect of the problem, that is, assuring that small amounts of Fe^{55} be accurately determined in the presence of Fe^{59}, it is felt that a satisfactory method is now available. G. E. Boyd of the Chemistry Division has made available a proportional counter spectrometer for some experimental work. This counter is a krypton-filled, beryllium-window type, the pulses from which are fed into a linear amplifier with a differential and integral pulse-height selector so that the x-ray count may be observed as a function of energy (pulse height). By use of this counter the energy of the radiation being observed may be determined precisely, and an integral count covering only the energy range in question can be made. Comparison with a standard is still necessary, since the absolute efficiency is unknown. It is interesting to note that all the Fe^{55-59} mixtures assayed for Fe^{55} by both the spectrometer and the old critical-absorption method have given results agreeing within several per cent, except those mixtures in which the Fe^{55} was in very low abundance as compared with Fe^{59}.

One aspect of Fe^{55} x-ray counting that has received little attention so far has been the effect on the x-ray counting rate of the small amounts of inactive Fe contained in the sample. The amount of inactive Fe varies from batch to batch. A suitable counting solution of Fe^{55} containing less than 5 μg of Fe per counting-size sample was made up, and samples were pipeted onto polystyrene for counting. After known amounts of iron carrier were added, the samples were evaporated and counted on the beryllium-window proportional counter by the critical-absorption method. Duplicate samples were counted at seven different concentrations of iron. The agreement between duplicates was poor, indicating that the samples on drying could not be easily reproduced. Table 2 gives the results.

(19) W. S. Lyon, "X-Ray 4π Counting," *op. cit.*, ORNL-1233, p. 25.

TABLE 2. EFFECT OF INACTIVE IRON ON X-RAY COUNTING OF IRON-55

INACTIVE Fe ADDED (mg)	FRACTION OF TRUE COUNT OBTAINED
0.005	0.94
0.01	0.95
0.02	0.96
0.05	0.96
0.1	0.89
0.2	0.89
1.0	0.52

The iron concentration (mg/cm^2) was calculated and the fraction of true count plotted on a log scale against absorber thickness on a linear scale. A straight line, indicating a radiation half-thickness of 10 mg/cm^2, resulted, which is in satisfactory agreement with the value of 8 mg/cm^2 calculated from the tabulated mass-absorption data. It is obviously important that these measurements should be repeated with a spectrometer and that more data should be obtained.

Assay of Low-Level Samples (W. A. Brooksbank and S. A. Reynolds). A survey of the background activity of the X-10 and Y-12 areas was conducted to locate a low-background area suitable for a radiochemical laboratory for the routine analysis of low-level samples. This survey was made with a crystal scintillation probe furnished by C. J. Borkowski of the Chemistry Division. Backgrounds ranged from 1500 cpm in the area of Building 1000 (X-10) to about 75,000 cpm in the ORNL graphite reactor and operating areas. The Jones area showed a background of from 700 to 3000 cpm. The background increased as the survey approached the main X-10 site. Y-12 had a background range of from 300 cpm to above 900 cpm. The highest readings were obtained near the Biology buildings, the intermediate readings from the area around Buildings 9733-1 and -2, and the lowest readings from the rest of the plant area. It is recommended that consideration be given to the Y-12 site for location of the proposed low-level laboratory.

Five hundred milliliters of Tl^{204} low-level counting standard, assaying 0.147 ± 0.007 μc of Tl^{204} per cubic centimeter of standard, was shipped to W. F. Spencer, Health Physics Department, K-25, for standardization of the constant water monitor.

A report by W. A. Brooksbank and S. A. Reynolds on the assay of low-level radioactivity is being prepared.

Analysis of Radioisotopes

Impurities in Calcium-45 and Strontium-85 (W. S. Lyon, S. A. Reynolds). Calcium-45 has been reported to be a pure beta emitter. Because of its use as a therapeutic agent, Ca^{45} radioisotope should be free from gamma contamination. Two Ca^{45} products have been examined recently on the sodium iodide scintillation spectrometer for gamma contamination. The first product, Ca^{45} - 51E, was one which had been shipped some months previously. The gamma spectrum obtained indicated the presence of at least four gamma rays, 200-, 280-, 870-, and 1080-kev. The latter two gamma rays are apparently from Sc^{46} and were present to about 1%. The other two were unidentified and appeared to be present in equal intensity. This batch was not processed in the usual manner by the Operations Division, according to their records.

A second shipment, Ca^{45} - 58E, which had been through the standard Ca^{45} process, was also examined for gamma contamination. This appeared to be quite pure, having only 0.005% of 305-kev gamma, and 0.0002% of 460-kev gamma. These percentages of gamma radiation are relative to the total amount of Ca^{45} activity present and were obtained from a calibration curve relating area under the gamma peak to

efficiency for the counter at that energy. It is apparent that this is an extremely sensitive method for detection of impurities in pure beta emitters. All Ca^{45} products will continue to receive such screening for contaminants.

Strontium-85 had been prepared for the Operations Division by the reaction $Rb^{85}(d,2n)Sr^{85}$. Rubidium-86, produced by $Rb^{85}(d,p)Rb^{86}$, was shown to have been incompletely removed by detection of it's 1.08-Mev gamma by use of the scintillation spectrometer. It was estimated that the disintegration rate of Rb^{85} was 10% of that of the Sr^{85} in the sample submitted.

Assay of K-Capturers (W. S. Lyon, S. A. Reynolds). A paper, "Methods in Use at Oak Ridge for the Assay of Electron-Capturing Nuclides," was presented by S. A. Reynolds at a seminar at the National Bureau of Standards on April 30. A method using measurement of gamma radiation was described for the assay of Be^{7}, Cr^{51}, Mn^{54}, Zn^{65}, Sr^{85}, and Sr^{113}. Also, a method using counting with a calibrated x-ray counter was described for the assay of Fe^{55} and Ni^{59}.

Analyses for Heavy Elements

Determination of Uranium-232 in Uranium-233 Product (F. L. Moore). Uranium-232, an alpha emitter ($t_{1/2}$ = 70 y), was identified in U^{233} product. The alpha energies are 5.3 and 4.8 Mev, respectively. The irradiation of the thorium was performed at Hanford at approximately 600 Mwd/ton. The pulse analyses were performed by E. Fairstein and M. Davis of the Chemistry Division. The alpha activity ratio was found to be U^{232}/U^{233} = 0.0086, with an estimated uncertainty of approximately 2.5%.

Analysis of Cyclotron Products

T. H. Handley

Work has been resumed on the determination of the fission yield vs. mass curves mentioned in an earlier report.[20] Distribution of fission products by mass is affected by the energy of the bombarding protons. At present only natural uranium is being bombarded, but eventually it is planned to use enriched isotopes of uranium and plutonium. In earlier work,[21] yields of Mo^{99}, Ag^{111}, and Ba^{140} were determined in the region of proton energies of 11 to 18 Mev. It is planned to determine other products for completion of the curve and to expand the energy range on the higher side. W. H. Jones, Emory University, has returned for the summer to participate in this work.

Purification of rare earths by ion exchange is continuing. Gram quantities of several purified rare earths have been accumulated. Some preliminary use has been made of gadolinium and terbium in bombardment work. It is also planned to use the ion-exchange columns for determination of yields of the rare earths in the fission-yield problem discussed above.

Some nuclear reactions studied this quarter were

$$Fe^{54}(p,pn)Fe^{53},$$
$$Fe^{54}(p,\alpha)Mn^{51},$$
$$Fe^{57}(n,p)Mn^{57},$$
$$Fe^{58}(n,p)Mn^{58},$$
$$Tb^{159}(p,pn)Tb^{158}.$$

Details of these experiments will be given in a forthcoming report.[22] Yields, half lives, cross sections, and beta and gamma spectra are some of the details given.

---

(20) T. H. Handley, "Analysis of Cyclotron Products," *op. cit.*, ORNL-1233, p. 26.

(21) J. L. Fowler, W. H. Jones, and J. H. Paehler, *Mo^{99}, Ag^{111}, and Ba^{140} Yields from Proton Induced Fission*, AECD-3356.

(22) *Quarterly Progress Report of the Electromagnetic Research Division, Part I, for the Period April 1 to June 30, 1952* (to be published).

Analyses for HRP and ANP

HRP (D. J. Coombe and S. A. Reynolds). Samples of HRE fuel were submitted for determination of gross beta activity[23] and gross gamma activity by means of the high-geometry scintillation counter.[24] The samples were contained in 10- by 70-mm culture tubes for counting. Gamma spectra that were determined with the scintillation spectrometer showed essentially the gamma and x rays characteristic of U^{235} and UY. Beta and gamma decay studies indicated little fission-product activity. The determination of gross beta and gamma activities will be made routinely by the HRE Analysis group. Nonroutine samples for beta and gamma decay and gamma spectrum will be handled by the Radiochemistry group.

ANP Xe Problem (W. A. Brooksbank). The experiments[25] planned with M. T. Robinson, Solid State Division, for the xenon diffusion problem have been completed. The details of the in-reactor equipment and the related flowmeter and heating circuits may be found in ANP Project and Solid State Division reports.[26]

In each experiment, the capsule containing the fuel eutectic was irradiated for 31 min in hole 12 of the ORNL graphite reactor. Gas flow (20 cc/min of helium) was started 4 hr after irradiation. For an additional 7 hr, the xenon was collected in an activated charcoal trap maintained at -78°C. This trap was removed from the system and inserted into the xenon purification train shown in Fig. 7. The trap was heated to 80°C in a water bath, and the

(23) M. T. Kelley, P. F. Thomason, L. T. Corbin, S. A. Reynolds, C. L. Burros, and E. J. Frederick, "Gross Beta Activity," (Method 28), *Manual of Analytical Procedures for the U^{235} Recovery Process*, ORNL-983 (Aug. 20, 1951).

(24) C. J. Borkowski, "Scintillation Counter with High Gamma-Counting Efficiency," *Chemistry Division Quarterly Progress Report for Period Ending September 30, 1951*, ORNL-1153, p. 83.

(25) W. A. Brooksbank and S. A. Reynolds, "Xenon Problem – ANP," *op. cit.*, ORNL-1233, p. 31.

(26) M. T. Robinson and D. Davies, *Solid State Division Quarterly Progress Report for Period Ending August 10, 1952*, ORNL-1359 (in press); D. S. Billington and A. J. Miller, *Aircraft Nuclear Propulsion Project Quarterly Progress Report for Period Ending September 10, 1952*, ORNL-1375 (in press).

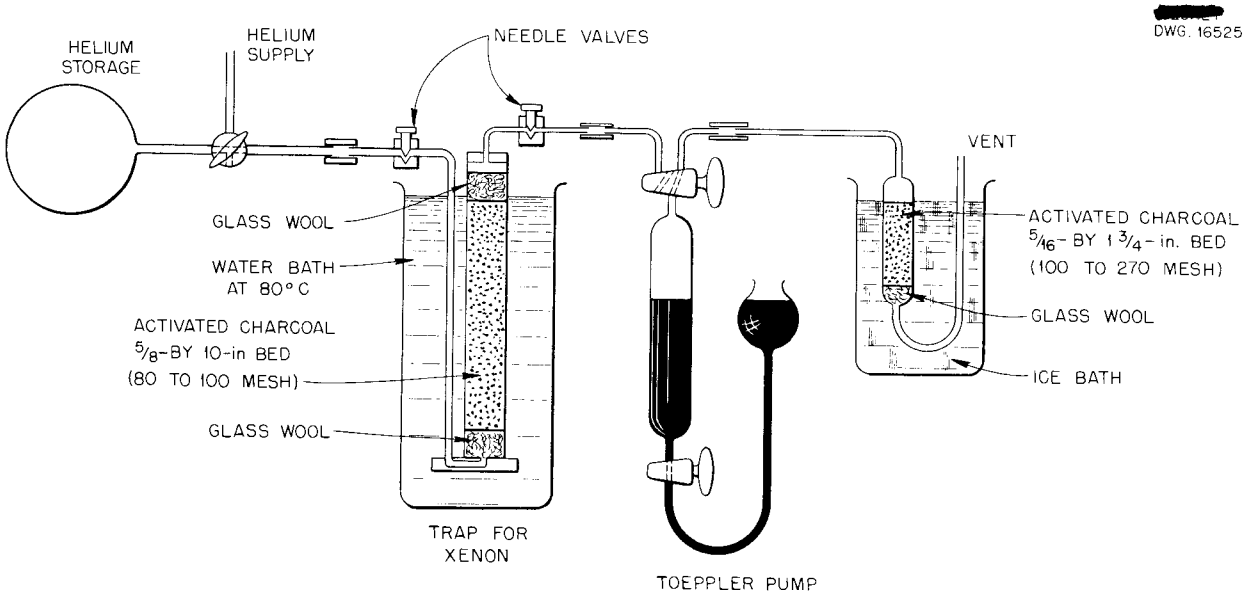

Fig. 7. Xenon Purification Train.

xenon was desorbed with a volume of helium three times the volume of the Toeppler pump at 2 psi pressure. This removed the xenon from the trap and readsorbed it on the small, ice-cooled, charcoal trap in the train. After transfer of the xenon, the small column was sealed and the activity was measured with a 4π, high-pressure, ion chamber. Decay studies were started immediately. Flux measurements were made with Al-Co-Mn monitor strips.

The activities retained on the small column had half-lives of 9.2 h and 5.2 d, which indicated xenon-135 (9.2 h) and xenon-133 (5.3 d). The magnitude of the xenon activity in the experiment in which the helium swept through the melt was 40 times greater than the activity measured in the experiment in which the helium swept over the melt.

These results indicate that xenon and the parents of xenon (tellurium and iodine) do not diffuse rapidly from the eutectic under the conditions of this experiment. Confirmatory experiments will be performed, but details have not been worked out sufficiently to predict what they will be.

Solvent Extraction Methods

Niobium-Tantalum Separation (F. L. Moore). Work on this problem is described by Leddicotte in the section "Extraction of Anionic Species: Niobium and Tantalum."

ACTIVATION ANALYSES

G. W. Leddicotte J. Y. Ellenberg[27]
H. A. Mahlman N. D. Lee[28]

Announcement of Routine Neutron Radioactivation Analysis Service. The proposed price schedule for activation analyses[29] has been evaluated by the ORNL Director's Office and the Oak Ridge Operations Office of the AEC. Announcement of the availability of this service has been made in the quarterly information bulletin[30] of the Isotopes Division of the AEC, Oak Ridge, Tennessee. Additional information has been prepared and will be released about July 30 to newspapers and other commercial publications.

Availability of Additional Irradiation Facilities for Neutron Activation Analysis. The facility, known as hole V-2, on the southeast side of the LITR has been outfitted for use by the Analytical Chemistry Division in irradiating samples. The equipment for this facility includes an aluminum liner, shielding materials, and bombardment containers. This facility permits the irradiation of samples in bombardment containers 2.75 in. in diameter and 8.0 in. long. The reported flux for this hole, 2×10^{11} neutrons/cm^2·sec, is being checked by personnel of the Activation Analyses group. The temperature of the hole is also to be checked.

Extraction of Anionic Species: Niobium and Tantalum (G. W. Leddicotte, J. Y. Ellenberg, and F. L. Moore). F. L. Moore has reported[31] the anionic solvent separation of niobium from tantalum by use of methyldioctylamine xylene. Briefly, quantitative separation of niobium and tantalum in 11 *N* HCl can be effected by means of 8 wt % tribenzylamine (TBA) in chloroform. The general procedure is to manually shake the aqueous solution of radioactive tracers (Nb^{65}, $t_{1/2}$ = 35.0 d; Ta^{182}, $t_{1/2}$ = 117 d) with an equal volume of solvent for 5 minutes. The layers are allowed to separate, and the experimental partition coefficients are determined by a measurement of

(27) On loan from Spectrographic Laboratory.

(28) Special assignment.

(29) G. W. Leddicotte, "Proposed Price Schedule for Activation Analyses," *op. cit.*, ORNL-1276, p. 41.

(30) "Neutron Activation Analyses," *Isotopics*, Vol. 2, Issue No. 2, p. 4, (April 1952).

(31) F. L. Moore, "Extraction of Anionic Species (Niobium and Tantalum)," *Analytical Chemistry Division Quarterly Progress Report for Period Ending September 10, 1951*, ORNL-1129, p. 35.

the radioactivity of both phases on a gamma scintillation counter.[32] Separate solutions of the single ions are used in determining the partition coefficients. Concentrations of inactive ions up to 20 mg of tantalum per milliliter and 6 mg of niobium per milliliter can be separated by this method.

The systems Nb^{65}-Ta^{182}-oxalic acid and Nb^{65}-Ta^{182}-sulfuric acid were studied because they could be prepared easily. However, no sharp differences in extractability of either ion could be found in either system. Table 3 shows the partition coefficients of interest; other solvents, proportions, and conditions considered were less favorable than those listed.

Additional work is to be done on the interference of other elements in TBA-chloroform systems of this type. If these interferences are not too great, the procedure can then be readily used for the determination of niobium in various materials.

[32] D. A. Brown and W. S. Lyon, "Scintillation Counting for Purex Solutions," *op. cit.*, ORNL-1276, p. 26.

TABLE 3. PARTITION COEFFICIENTS OF NIOBIUM AND TANTALUM

SYSTEM*	K_{Nb}**	K_{Ta}**
9 *N* HCl	5.05	0.0013
10 *N* HCl	13.34	0.0020
11 *N* HCl	48.31	0.0020
0.1% oxalic acid	3.04	0.98
1.0% oxalic acid	2.90	0.93
10.0% oxalic acid	2.97	1.30
4.5 *N* H_2SO_4	0.11	0.00097
9.0 *N* H_2SO_4	0.078	0.00028
18.0 *N* H_2SO_4	0.0092	0.013

*Equal volumes of aqueous and organic media; 5 min of shaking with 8 wt % TBA in chloroform.

$$^{**}K_A = \frac{\text{cpm/ml of } A \text{ in chloroform phase}}{\text{cpm/ml of } A \text{ in aqueous phase}}, \text{ where}$$

A is Nb or Ta, as indicated.

Determination of Natural Uranium (U^{238}) by Radioactivation Analysis (H. A. Mahlman, G. W. Leddicotte). The quantitative determination of uranium in amounts as low as 5×10^{-3} μg is possible by assay of the neutron-irradiated sample for Np^{239} gamma activity. The proposed decay scheme[33] for $_{93}Np^{239}$ ($t_{1/2}$ = 2.3 d) $\longrightarrow$ $_{94}Pu^{239}$ lists eight gamma-quanta, varying in energy from 0.057 to 0.275 Mev,[32] that can be readily measured in a gamma scintillation counter.

The technique is now being evaluated for application to the determination of uranium in low-grade ores and of uranium on paper chromatograms. The specimens are irradiated in either the graphite reactor or LITR, put into solution, and the Np^{239} activity is separated by a modification of the procedure of Hudgens *et al.*[34] Since the proposed method depends upon the U^{238} content, the enriched material, U^{235}, will be biased low. Cognizance of the bias that may exist will enable applications of the method to be made.

Determination of Pesticide Residuals (as Chloride) in Milk and Milk Products (H. A. Mahlman, G. W. Leddicotte). Prior to the public sale of pesticides, it is necessary to determine the quantity of these materials assimilated by domestic animals that produce foodstuffs for human consumption. There is interest in the determination of trace amounts of chlorine in the food products from dairy cows that have been dusted or otherwise brought into contact with toxaphene, a pesticide that is potentially more powerful than DDT or its derivatives.

[33] K. Way, L. Fano, M. R. Scott, and K. Thew, *Nuclear Data*, NBS Circular 499, p. 268 (Sept. 1, 1950).

[34] J. E. Hudgens, J. E. Sattizahn, F. R. Bruce, and M. W. Carlson, "Development of a Method for the Determination of Np Activity in Process Solutions," MonN-13 (Sept. 24, 1945).

A series of samples submitted by the U. S. Department of Agriculture, Kerrville, Texas, has been under study by radioactivation analysis. The reaction $_{17}Cl^{37}(n,\gamma)_{17}Cl^{38}$ ($t_{1/2}$ = 38.5 m)[35] is used to determine the chloride content of an aqueous extract of whole milk; the extract was prepared by the requestor in a manner similar to that used by Carter.[36] Several samples of butterfat were also submitted.

The method of radioactivation analysis consists of irradiating the materials in the graphite reactor for about 1 hour. After the irradiation, inactive chlorine carrier and suitable holdback carriers are added, and the sample is processed by a procedure similar to that used by Reynolds[37] for the determination of chlorine in titanium.

The quantity of chloride introduced as a contaminant in the chemicals utilized by the requestor in processing the materials greatly hindered an effective analysis. The reagent blank, in one instance, contained 500 times the quantity of chloride sought. Also, the gross amounts of sodium added in the conversion of the organic chlorine to an inorganic chloride gave considerable excess activity (as Na^{24}) that was not completely eliminated in the analytical procedure. The present radiochemical separation method shows an effective decontamination factor of only 10^4 for Na^{24} radioactivity.

With these factors to be considered, it is felt that another way of processing the materials should be developed and that the work should be concentrated on a more effective radiochemical separation. The requestor has submitted another sample processed by a different method. A radiochemical separation by the use of anionic-resin columns is being studied. Preliminary experiments indicate that it is possible to adsorb at least 95% of the radioactivity from a solution of Cl^{38}.

Determination of Cesium in Rubidium Carbonate (G. W. Leddicotte, J. Y. Ellenberg). Brooksbank[38] has shown that it was possible to quantitatively determine trace amounts of radioactive cesium. His procedure was rather long, requiring an elution time of about 100 hr to effect the separation of cesium from other alkali metals. Hyde,[39] by check experiments preliminary to the development of radiochemical methods for the isolation of element 87 (francium), showed that it was possible to obtain nearly quantitative adsorption and desorption of radioactive cesium (as Cs^{137}) from a column of Dowex-50 that was approximately 1 cm in diameter and 4 cm long with a resin mesh of 250 to 500 microns. The total sample volume used in the process did not exceed 25 ml. Brooksbank[40] more recently showed the adsorption and desorption effects of the alkali metals on smaller columns. By use of the information from these experiments, it has been possible to obtain quantitative results on an IR-100 resin (mesh > 120) column 8 cm long and 1 cm in diameter. The rate of flow of the eluate was about 1 ml/min. The column was conditioned with 25 ml of 0.4 *N* HCl and eluted with 30 ml of 0.4 *N* HCl after the sample had

(35) Way, Fano, Scott, and Thew, *op. cit.*, NBS Circular 499, p. 31.

(36) R. H. Carter, "Estimation of DDT in Milk by Determination of Organic Chlorine," *Anal. Chem.* **19**, 54 (1947).

(37) S. A. Reynolds, "Analysis of Titanium for Chlorine and Tungsten," *Analytical Chemistry Division Quarterly Progress Report for Period Ending June 26, 1951*, ORNL-1113, p. 43.

(38) W. A. Brooksbank, "Application of Ion Exchange to Radiochemical Analysis," *Analytical Chemistry Division Quarterly Progress Report for the Period Ending October 10, 1950*, ORNL-867, p. 52-57.

(39) E. K. Hyde, "Radiochemical Methods for the Isolation of Element 97 (Francium)," UCRL-1578, (Nov. 27, 1951).

(40) W. A. Brooksbank, "Flux Determinations for the Homogeneous Reactor," *op. cit.*, ORNL-1276, p. 34.

been placed on the column. Sodium, potassium, and rubidium are desorbed in that volume, and the cesium is retained on the resin bed. The cesium was then removed by elution with a solution of 6 *N* HCl, and activity measurements were made with the gamma scintillation counter.

Table 4 shows some typical information obtained under the above conditions. That the determination of cesium in the presence of other alkali metals is possible has been indicated by studies with radioactive tracers of sodium, potassium, rubidium, and cesium. Columns much longer than 8 cm and different elution conditions are necessary for the individual separations of sodium, potassium, and rubidium.

Cesium has been determined by the method given on a sample of Rb_2CO_3. By (n,γ) reaction[41] on Cs^{133}, it is possible to produce Cs^{134} ($t_{1/2}$ = 3.15 h). The material was irradiated for 3.5 hr in the pneumatic tube of the graphite reactor, and the gamma quantum of the separated Cs^{134} was measured on a gamma scintillation counter. The results on the specimen were obtained by comparing the activity in the specimen with the activity of a known amount of cesium processed under the same conditions. The results obtained showed that the Rb_2CO_3 contained 0.28% Cs, which compared favorably with results determined by the X-10 Spectrographic Laboratory.

Applications of Activation Analysis. Activation analysis has been applied routinely to the determination of sodium and calcium in aluminum. Further inquiries have been received on the possibility of applying activation analysis to the determination of chromium and gold in animal tissue and cobalt in stainless steel.

SPECTROCHEMICAL ANALYSES

C. Feldman M. Wittels
A. Estepp M. Murray

Detection of Technetium. Given in Table 5 are the absolute limits of

[41] Way, Fano, Scott, and Thew, *op. cit.*, NBS Circular 499, p. 160.

TABLE 4. ADSORPTION AND DESORPTION OF THE ALKALI METALS

METAL	AMOUNT ADSORBED* (total cpm)	AMOUNT DESORBED (total cpm)	CONDITION FOR DESORPTION
Sodium	61,462 61,427	61,351 61,155	Sample in 0.4 *N* HCl, elution with 30 ml of 0.4 *N* HCl; aliquot of 0.4 *N* HCl eluate taken for gamma measurements
Potassium	2,500 2,500	2,500 2,500	Same as above
Rubidium	39,266 39,266	39,150 39,127	Same as above
Cesium	403,539 403,539	400,000 400,000	Sample in 0.4 *N* HCl, elution with 30 ml of 0.4 *N* HCl; water wash followed by elution of Cs^{134} with 10 ml of 6 *N* HCl; aliquot of 6 *N* HCl eluate taken for gamma measurements

*100% adsorption of Cs^{134} assumed.

TABLE 5. DETECTION LIMITS FOR TECHNETIUM LINES BY COPPER SPARK TECHNIQUE

++ = strong; + = visible; – = not detected

WAVELENGTH* (Å)	DETECTION LIMITS Technetium on Electrodes (μg)			INTERFERENCES
	0.10	1.5	4.7	
2543.24	–	+	++	
2610.00	–	+	++	
2647.02	+	+	++	
3636.10	+	+	++	
3718.88	–	+	++	
3746.87	+	+	++	
4031.63	+	++	++	Re 4031.64
4049.10	+	++	++	Re 4048.992
4088.70	–	+	++	Mo 4088.660
4095.68	–	+	++	Mo 4094.908
				Mo 4095.318

*W. F. Meggers, "The Spectrochemistry of Technetium and Promethium," *Spectrochim. Acta* **4**, 317 (1951).

detection that have been prepared for the technetium ultraviolet emission lines that show the greatest sensitivity by the copper spark technique.

Since pertechnetates are quite volatile, it was considered inadvisable to prepare standard electrodes by evaporating a pertechnetate solution on the end of a copper electrode. The technetium was therefore electrodeposited (by Q. V. Larson) onto the copper electrodes at room temperature from a sulfuric acid solution of $KTcO_4$ at pH 0.9; the current density was 10 to 14 amp/dm^2. The quantity of technetium deposited on the electrodes was checked by counting the amount of 4-d Tc^{96} gamma activity on the electrode and calculating chemical yield in the usual way.

Determination of Traces of Cesium in Rubidium by Flame Excitation. Several methods of measuring the concentration of cesium by flame excitation were studied to determine which gave the best precision. In all cases, the solutions were exposed for 30 sec with a Beckman flame excitation unit (hydrogen type, model 4020). Spectra were photographed on I-N film in the first order of a Jarrell-Ash, 21-ft spectrograph. No filter was used.

The solutions were prepared by treating an aliquot of a stock solution containing 5.00 mg/ml of Rb and 15.5 ppm Cs (as the chlorides) with an additional 11.0 ppm Cs (as the chloride). Portions of this solution were then diluted with the stock solution to give the solutions described in Table 6.

TABLE 6. COMPOSITION OF EXPERIMENTAL RUBIDIUM-CESIUM SOLUTIONS

SOLUTION NO.	Rb (mg/ml)	Cs (ppm)
1	5.00	20.7
2	5.00	24.8
3	5.00	26.5

In order to study the precision with which flame conditions could be re-established, exposures were run in sets of three. In each set, the flame was lit, solutions 1, 2, and 3 were exposed in order, and the flame was extinguished.

In the measurement and interpretation of data, the cesium concentration of solution 2 was considered to be "unknown," and was "determined" by interpolating between the two "known" values by the methods given below.

Line-Width Methods:

1. The width of Rb 7800.227 was measured at an optical density corresponding to the maximum of Cs 8521 for each solution. The line widths for solutions 1 and 3 in a given set were plotted against cesium concentration on linear paper. The cesium concentration in solution 2 was then "determined" by interpolating linearly between the line widths obtained from solutions 1 and 3.

2. Line widths for solutions 1 and 3 in all sets of exposures were averaged and the average for each solution was plotted against cesium concentration on linear paper. Individual concentration values were then determined for solution 2 by interpolating on this curve.

Intensity-Ratio Methods:

3. The intensity ratio Cs 8521/K 7664 was measured for solutions 1 and 3 in a given set, and the log of the ratio was plotted against the log of the cesium concentration on logarithmic graph paper. The cesium concentration of solution 2 was then determined by linear interpolation of the intensity ratio in that set on the graph.

4. Intensity ratios obtained for solutions 1 and 3 in all sets were averaged, and the averages were plotted as in method 3. Individual values for solution 2 were then read from this curve.

5. A method similar to method 3 was used except that the intensity ratio measured was Cs 8521/Rb 4202. (Rb 4202 was used in the second order. Its intensity was measured with an intensity ruler calibrated for this region. Since all exposures were made on a single roll of film, it was assumed that the relative sensitivity of the emulsion between the 8521 region and the 4202 region was the same for all exposures.) The results given in Table 7 show that under the present conditions (1) interpolating sample readings between standard readings in the same set gives better precision than obtained by using a "working curve" made by averaging readings for replicate exposures of standards, (2) the line-width method, on the whole, gives better precision than the intensity-ratio method, and (3) the best precision (avg. dev. 1.2%) is obtained by running standards along with the sample without extinguishing the flame.

Determination of Traces of Zirconium in Hafnium. Samples were received as

TABLE 7. PRECISION OF INTERPOLATED CESIUM CONCENTRATIONS FOR SOLUTION 2

QUANTITY MEASURED	INTERPOLATION METHOD					
	Sample Reading Interpolated Between Standard Readings in Same Set			Sample Reading Interpolated Between Averaged Standard Readings		
	Avg. Cs Conc. (ppm)	Avg. Dev. (in % of conc.)	No. of Cases	Avg. Cs Conc. (ppm)	Avg. Dev. (in % of conc.)	No. of Cases
Line width Cs 8521/Rb 7800	25.3	1.2	17	25.3	2.2	18
Intensity ratio Cs 8521/K 7664	24.1	3.0	14	24.1	3.9	16
Intensity ratio Cs 8521/Rb 4202	25.3	2.1	15	25.2	6.9	15

damp hafnium tetramandelate cake. The analytical procedure used for determining zirconium and hafnium was the following: transfer approximately 890 mg of the cake to a 250-ml beaker. Pass the beaker back and forth through the flame of a Meker burner until substantially all the organic material has burned off. (Allowing the beaker to remain in the flame continuously will cause heavy smoking and generally untidy and incomplete ignition.) Allow the beaker to cool. Add approximately 15 ml of concentrated H_2SO_4 and approximately 0.5 ml of concentrated $HClO_4$ and boil (over a flame, if necessary) until a clear, colorless solution is obtained. Fume off the H_2SO_4 on a hot plate until its volume is 5 ml or less, and allow to cool. Transfer quantitatively to a 10-ml volumetric flask by rinsing with water. Dilute to the mark with water.

Expose spectrographically by the porous-cup technique. Measure the intensity ratio Zr 3391.975/Hf 3392.811, and read the zirconium-to-hafnium concentration ratio from a working curve. The useful limit of detection is approximately 1 ppm zirconium. If the final sample solution contains 20 mg/ml of hafnium, this corresponds to a detection limit of 50 μg of zirconium per gram of hafnium (that is, 50 ppm or 0.005%). The working curve should be plotted in terms of the hafnium-to-zirconium ratio, rather than weight per volume hafnium concentration, so that the result will not be affected by small variations in the concentration of the sample solution such as might result from deposition of hafnium salts. The curves prepared covered the range 50 to 1250 μg of zirconium per gram of hafnium (1 to 25 μg of Zr per ml of 2% Hf solution).

Inorganic Preparations

D. E. LaValle R. H. Sampley

Solid Solutions of Uranium Trihalides in Lanthanum Halides (D. E. LaValle). The Nuclear Physics and Low-Temperature group of the Physics Division requested a study of the possibility of making solid solutions of uranium trihalides in lanthanum halides. Uranium trifluoride was available from the Y-12 plant; so it was decided to start with this material. Because LaF_3 melts at a very high temperature (> 1300°C), $LaCl_3$ was used. It was prepared in the anhydrous state by the method devised by Reed, Hopkins, and Audrieth,[42] whereby an intimate mixture of NH_4Cl and La_2O_3 is heated in vacuum to about 400°C. This product was placed in a quartz test tube, and sufficient UF_3 was added to make a 1 mole % solution. After evacuation the tube was lowered into a furnace that had been preheated to 900°C. Much extraneous material came off, however, and there was some attack of the quartz by the UF_3.

It was decided to fuse the $LaCl_3$ separately in an atmosphere of HCl. After the fused mass was broken up in a dry box and the UF_3 added, the mixture was placed in a platinum boat and fused in vacuum at 900°C. Apparently all the UF_3 (dark-red) was converted to UCl_3 (olive-green), and some of the UCl_3 had sublimed and condensed in the cooler portions of the tube as various chlorides of uranium.

The material in the boat was crushed in the dry box and placed in small pyrex containers of special design for use in the low-temperature apparatus. An experiment carried out with this product gave negative results. Another preparation was then made with 10 mole % of UF_3. This preliminary product was successful in that it demonstrated the existence of magnetic effects at low temperatures.

Accordingly, it was decided to launch a program using various solid solutions of the highly purified materials. UCl_3 is to be used instead

[42] H. S. Booth (Editor-in-chief), *Inorganic Syntheses*, Vol. 1, p. 28-33, McGraw-Hill, New York, 1939.

of the trifluoride to avoid corrosion problems. A system is now under construction for the preparation of highly purified hydrogen and HCl gases to be used in the preparation of UCl_3, and in the various fusions required.

Phosphors (R. H. Sampley). The phosphors listed in Table 8 were prepared for the Physics Division.

TABLE 8. PHOSPHORS PREPARED FOR THE PHYSICS DIVISION

PHOSPHOR	ACTIVATORS
LiI	Se, Ru, Eu, Re, Ge
LiBr	Se, Ru, Eu, Re, Ce
LiF	Re

Other Preparations and Purifications (R. H. Sampley). Li_2CO_3, HI, and $LiI \cdot 3H_2O$ were prepared in large quantities (several hundred grams) and minor quantities of $SnBr_2$, SnI_2, and $EuCl_2$ were made. Large amounts of LiCl, $(NH_4)_2CO_3$, and HBr were purified.

ANALYTICAL CONTROL OF THE HRE SOLUTION

R. H. Powell C. G. Heisig[43]

Princo Densitrol (R. H. Powell). The development and evaluation of the Densitrol unit and metal plummets for use in it to determine the specific gravity of HRE uranyl sulfate fuel solutions is continuing. The work is reported elsewhere.[44]

Continuous Colorimetric Analysis of UO_2SO_4-H_2O Reactor Fuel Systems (C. G. Heisig[43] and R. H. Powell). An investigation of the use of the differential technique[45,46] for measuring the spectral absorbancy of uranyl sulfate fuel solutions has been started to determine its suitability for the analysis of degassed fuel stream at 175°C and 200 psi. Preliminary work on the development of a design for a spectrophotometer and cell for reactor service is discussed in the HRP report.[47]

OPTICAL AND ELECTRON MICROSCOPY

T. E. Willmarth
F. D. McNeer I. H. Gary

Microscopy of Oxide Films and Crystallographic Studies for the HRP. A microscopic and electron diffraction study has been made for the homogeneous reactor project to determine the effects of $MoO_4^=$ on the formation of oxide films on type 347 stainless steel. The samples examined had been treated in the following manner: sample 1 was bare-rolled steel sheet exposed in a solution of 300 g of uranium (as UO_2SO_4) per liter of water and 0.03 *M* in $MoO_4^=$ for approximately 4 weeks at 250°C under 100 psi oxygen; sample 2 was the same as sample 1 except that there was no $MoO_4^=$ present; sample 3 was pretreated in 1% HNO_3 and then exposed in the same manner as sample 2.

Examination by optical microscopy disclosed that the sample treated in the UO_2SO_4 solution containing $MoO_4^=$ (sample 1) was coated with a smooth, lustrous, black film approximately 0.8 to 1 μ in thickness. Surface examination of the film showed no crystallites capable of resolution at high power. The film appeared to fit very tightly and to followclosely the contours of the structure of the substrate metal. A few shallow pits, which may have been either residual from previous treatment or the sites of attack by the testing solution, were observed. In all cases the pits were covered with a coating of the same

(43) Reactor Experimental Engineering Division, ORNL.

(44) *Homogeneous Reactor Project Quarterly Progress Report for Period Ending July 1, 1952*, ORNL-1318, p. 22.

(45) C. F. Hiskey, "Principles of Precision Colorimetry," *Anal. Chem.* **21**, 1440 (1949).

(46) R. Bastian, R. Weberling, and F. Pallilla, "Differential Analysis with a Beckman Spectrophotometer," *Anal. Chem.* **22**, 160 (1950).

(47) *op. cit.*, ORNL-1318, p. 20.

appearance as the oxide film of surrounding areas.

Sample 2 was gray-black to black in color but did not have the smooth shiny appearance of sample 1. Optical examination at a magnification of 800X revealed that the oxide layer was composed of crystallites 0.5 to 1 μ in size. The thickness of the nonuniform bulk oxide layer varied from less than 1 to more than 3 microns. In thin areas of the sample, hazy outlines of the surface metal structure below could be seen. Numerous built-up projections of crystallites, apparently formed at sites of more rapid attack on the metal surface, were observed on one face of this sample.

One surface of sample 3 appeared to have a lustrous, black coating similar to sample 1. However, the covering was found to be much thicker than in the case of the sample exposed to $MoO_4^=$ and was definitely crystalline. The reverse face of this sample had the same type of agglomerate projections noted on sample 2.

Electron diffraction transmission patterns obtained from dispersions of the surface layers of the three samples were very similar, and line intensities were nearly identical. The layer constituents were tentatively identified as $Cr_2O_3 \cdot Fe_2O_3$. A broad line at 2.42 Å, which appeared only in the pattern from sample 1, corresponds to one of the most intense lines found in patterns of MoO_2 and Mo_2O_3. However, as the strongest line of MoO_2 and Mo_2O_3 (3.42 Å) did not appear in the measured pattern, it would be questionable to assume the presence of molybdenum in either the di- or sesquioxide form. Other lattice spacings of these two oxides, with the exception of the one mentioned, are positioned so close to lines of the chromium and iron oxides that it would be impossible to distinguish the difference, especially in these patterns where line broadening is evident.

Spectrographic analysis of the samples did show, however, a strong molybdenum line for sample 1 and relatively less strong lines for iron and chromium. Samples 2 and 3 showed strong lines for iron and chromium and only trace or very weak lines for molybdenum.

This analysis, together with the information received from electron diffraction and microscopic observations, might suggest that the compound of molybdenum in the film is colloidal. Its presence appears to inhibit the usual formation of the oxides of chromium and iron at the oxide-to-solution interface on type 347 stainless steel.

HRP studies of a series of oxide films formed on type 347 stainless steel in 0.17 *M* UO_2SO_4 to which $CuSO_4$ had been added and of films formed on type 347 stainless steel in 0.17 *M* UO_2SO_4 to which simulated fission products had been added indicated the formation of the usual stratified layers of bulk oxides of chromium and iron. No corrosion inhibitory effects from the additions were apparent from this examination. Patterns obtained from transmission electron diffraction of the film samples examined were almost identical and matched, within the limits of experimental error, the lattice spacings of Fe_2O_3. One additional strong line was found in the pattern for one of the films formed in the solution to which fission products had been added. This line had a spacing of 3.15 Å. Inasmuch as low scatter-angle lines with a spacing of 3.00 Å are subject to a 2.0% error, this spacing could fall in the range of 3.15 ± 0.063 Å. The strongest line of the monoclinic variation of the oxide of zirconium, one of the simulated products added, is found at 3.19 Å. However, other strong lines of this compound are

missing or fall so close to spacings of chromium or iron oxide that it is impossible to definitely identify its presence.

Studies of corrosion films include one group of type 347 stainless steel samples that was exposed to a solution of 40 g of uranium (as UO_2SO_4) per liter of water at 250°C and a velocity of 20 ft/sec for two successive periods of 130 hr each and an additional period of 225 hr. All samples lost weight during the first exposure and gained weight during the second and third exposure periods. Silicon dioxide was present as sand during the second period.

This group of samples appears, from the preliminary tests, to be unusually corrosion-resistant. Attempts are being made to determine, by x-ray and electron diffraction, the identity of the apparently protective layer formed over the Cr_2O_3 or Fe_2O_3 layer below. Figure 8 shows the nature of the surface of the yet unidentified layer where it has been in contact with the solution. Note the size and geometrical outline of what appear to be crystals in the matrix.

Film examinations are being made of types 321 and 347 stainless steel samples that were exposed in a solution containing 240 g of uranium (as UO_2SO_4) per liter of water and also 5 g of nickel per liter of water at 250°C for 138 hr at a velocity of 12.4 ft/sec.

Other work for the homogeneous reactor project includes numerous particle-size studies of $UO_3 \cdot H_2O$ crystals and micro crystals of Fe_2O_3 and of Cr_2O_3 dispersed in HNO_3 and H_2SO_4 solutions.

Microscopy of Metals. Electron micrographs were taken of positive replicas from various faces of a single copper crystal as one of the initial steps in an experiment to determine what changes in surface structure, if any, are caused by the hydrogen annealing of metals.

A number of welded type 309 stainless steel coupons was photomicrographed before and after exposure to a corrosion medium containing HNO_3, HF, I_2, and various cations. Light to severe damage was noted at the weld zone in all samples after exposure.

Other Work. Particle-size studies were made of various exchange resins, and a series of UO_3 samples was compared.

SERVICE ANALYSES

IONIC ANALYSES

P. F. Thomason

The service work of the Ionic Research and Development group increased this past quarter because of the greater demand for uranium gravimetric analyses for the HRE. The analyses of irradiated fuel samples from the corrosion studies of UO_2SO_4 solutions, solid eutectics of UF_4, and UO_3 slurries accounted for the bulk of the service work of this group. The methods used for these analyses were reported previously.[1]

RADIOCHEMICAL ANALYSES

S. A. Reynolds

Most of the service work of the Radiochemical Analyses group this quarter was done for the Operations Division. New or uncommon radioisotope products were assayed, and products were tested for impurities. Nonroutine plutonium, UX, fission-product, and protactinium analyses

[1] P. F. Thomason, "Ionic Analyses - Development Group," *Analytical Chemistry Division Quarterly Progress Report for Period Ending January 10, 1951*, ORNL-955, p. 65.

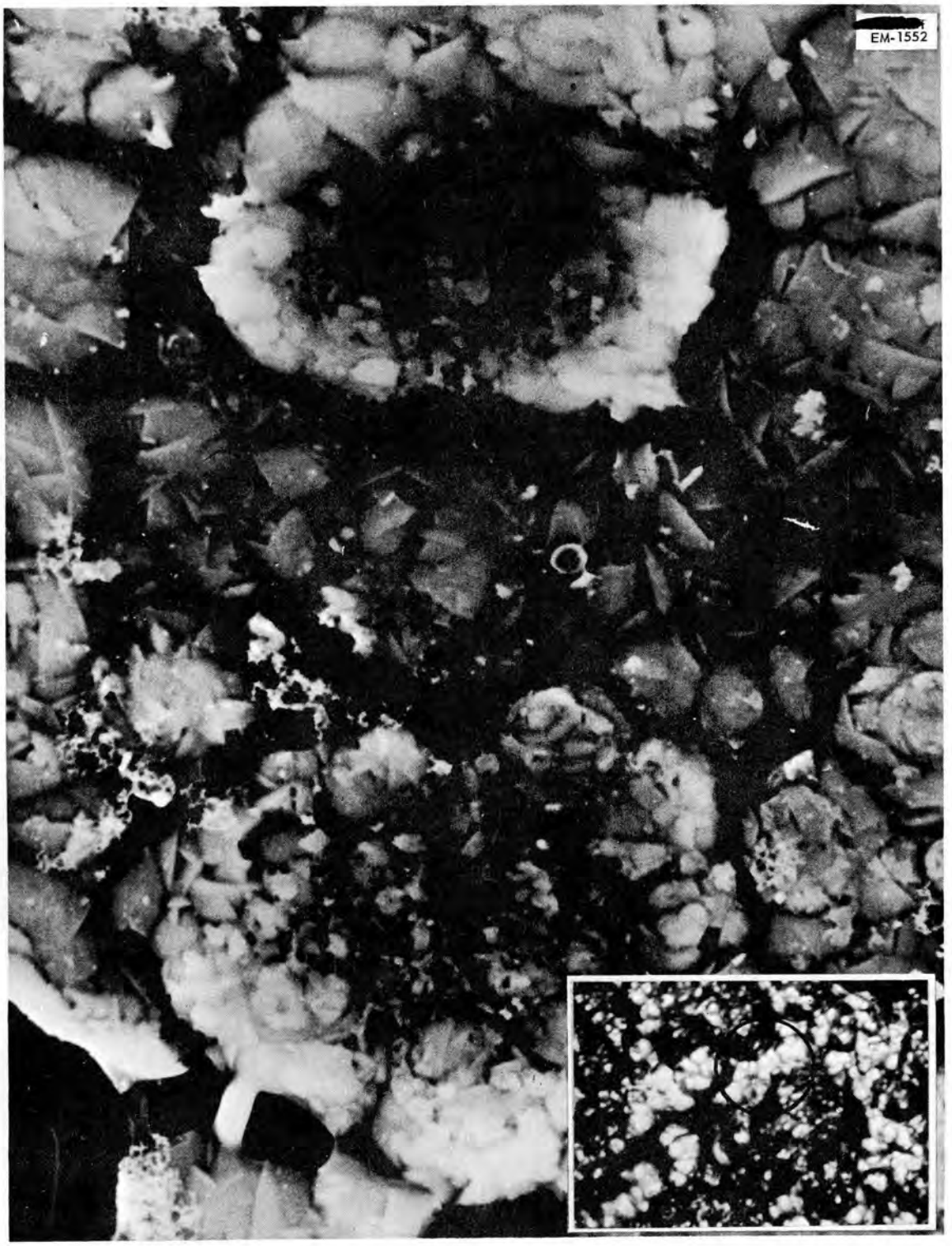

Fig. 8. Electron Micrograph Showing Character of Corrosion-Resistant Matrix Layer Formed on Type 347 Stainless Steel in UO_2SO_4 Solution at 250°C in a Loop Contaminated with SiO_2. 7000X. Insert shows representative surface at lower power, with area represented in electron micrograph circled.

were performed for the Chemical Technology Division. Work for the Chemistry Division included special U^{233} analyses and identification of radioelements. X-ray and gamma spectra were run for Health Physics. The work for other divisions is reported with the research and development activities of the Radiochemical Analyses group.

ACTIVATION ANALYSES

G. W. Leddicotte

Routine determinations of sodium and calcium in aluminum have been made.

GENERAL RADIOCHEMICAL ANALYSES

C. L. Burros

The major portion of work of the General Radiochemical Analyses group was done for the Pilot Plant relative to their Purex Process runs at radiation levels equivalent to those used for Hanford production. The Chemical Technology Division was assisted in their Purex equilibrium studies of the extraction of plutonium, uranium, and fission products with TBP at elevated temperatures and in their study of the recovery of plutonium from metallurgical waste and from process samples of the SCRUP program.

GENERAL ANALYSIS LABORATORY

J. H. Edgerton

The solubility and corrosion of metals and alloy components in liquid hydroxide and other ANP fuels are being studied by the Metallurgy Division. Samples of $Sr(OH)_2$ that had been degassed in stainless steel at 500°C for 1 hr were submitted for the determination of water and corrosion products. Analyses were made for iron, chromium, and nickel by methods reported previously. The water was determined by heating the $Sr(OH)_2$ in a high vacuum in an apparatus designed by J. H. Edgerton and H. L. Hemphill (Fig. 9).[2] A pressure of 0.005 atm was maintained with the temperature of the oven at 120°C for 24 hr or until constant weight of the $Sr(OH)_2$ was obtained. Agreement of the results of four analyses on each of two samples of $Sr(OH)_2$ indicated excellent precision of the method. Vacuum dehydration at 120°C with the above apparatus was attempted on $UO_2SO_4 \cdot 3H_2O$ samples from the Chemical Technology Division in connection with D_2O recovery from HRE fuel solutions. A value of 8.49% H_2O was obtained, which is in fair agreement with the theoretical value of 8.575% H_2O content of $UO_2SO_4 \cdot 3H_2O$, if the assumption is made that only two molecules of H_2O are removed. The procedure will be described in a formal analytical method.

The study of salt residues resulting from dissolution of slag and crucible materials by the Chemical Technology Division's process for the recovery of plutonium from metallurgical waste required the determination of iodine. The extraction method for iodine described previously[3] was changed. The I_2 and IO_3^- were reduced with $NaHSO_3$ instead of hydroxylamine hydrochloride. The potentiometric titration of iodine with $AgNO_3$ was performed by measuring the potential of a silver halide electrode.[4]

A new Beckman, model B, flame spectrophotometer is being used for the determination of potassium and sodium. Several changes have been made in this instrument. The oscillations and the drift in the dark current were controlled by replacing the photoelectric tube with a photomultiplier tube having an amplifying

(2) J. H. Edgerton, secret notebook, CL-1699, p. 102-103.

(3) J. H. Edgerton, "General Analysis Laboratory," *Analytical Chemistry Division Quarterly Progress Report for Period Ending March 26, 1952*, ORNL-1276, p. 62.

(4) C. J. Rodden (Editor-in-chief), *Analytical Chemistry of the Manhattan Project*, p. 290-291, McGraw-Hill, New York, 1950.

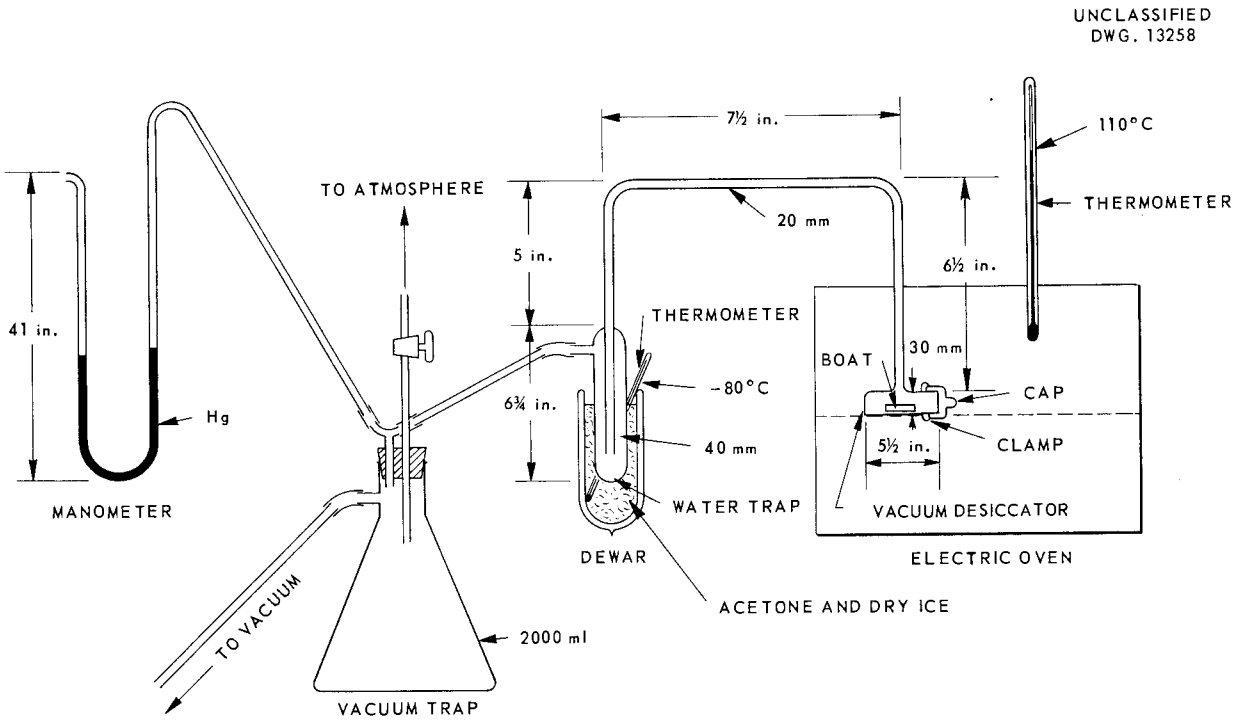

Fig. 9. Apparatus for Microdetermination of Water in Strontium Hydroxide.

circuit. This change was made by M. T. Kelley, C. Feldman, and D. J. Fisher (cf., "Development of an Automatically Recording, Internal-Standard, Flame Photometer. I. 100% Feedback, Impedance-Matching, Direct-Current Amplifier," this report). An oxygen-acetylene atomizer burner was tried first; however, soot, carbonization, and aqueous salt deposits were formed that required frequent shutdowns to permit cleaning of the burner. A H_2-O_2 burner was purchased and has been in operation for one week without necessity for cleaning. With this apparatus, 1 ppm potassium has been determined in the presence of 10 ppm sodium and 0.2 ppm sodium in the presence of 10 ppm potassium.

Work is continuing on separations with 12% cross-linked Dowex-50, as reported previously.[3] Nitrates, sulfates, and boron have been separated and determined satisfactorily. Boron is being determined with manitol, the two end points being detected potentiometrically instead of by methyl red and phenolphthalein.

LABORATORY AND SEMI-WORKS CONTROL

G. R. Wilson

One half the total work of the Laboratory and Semi-Works Control group for the quarter was for the Thorex group of the Chemical Technology Division. In view of the heavy work load, it was thought necessary to develop another method for the determination of U^{233} in samples containing thorium, aluminum, and protactinium. The method now in use consists of salting the uranium into hexone with aluminum nitrate and alpha counting the organic phase.[5]

The Plutonium Isolation group uses Dowex-A1 anion-exchange resin to separate uranium and plutonium. The

[5] D. E. Ferguson and E. L. Nicholson, *Summary Report for the 23 Pilot Plant Program*, ORNL-715, p. 102 (July 27, 1950).

uranium forms an anion with hydrochloric acid and remains on the resin, and the plutonium passes through the resin column. The uranium is then eluted with water. Since hydrochloric acid corrodes the stainless steel plates used in routine alpha counting, it is desirable to use acetic acid, which also forms an anion with uranium.

In order to eliminate transferring the eluate, apparatus is designed for eluting the U^{233} directly into a volumetric flask, in which it can then be diluted to volume and a gross alpha count run on it. The apparatus consists of four parts. The first part, a small reservoir in which the sample and the acetic acid are mixed, is connected by a piece of rubber tubing to the second part, which is a 12/30, standard-taper, male, ground-glass joint with a constriction near the joint. The constriction holds the glass wool in the column, and the wool in turn holds the small particles of resin in the column. The third part is a 12/30, standard-taper, female, ground-glass joint sealed to a 10/30, standard-taper, male joint, and there is a vacuum connection located between the joints. A piece of 3-mm glass tubing is sealed by a ring seal inside the tubing of the joints and above the sidearm. The 3-mm tubing extends through and to about 1 in. below the 10/30, standard-taper, male joint. The fourth part is a volumetric flask in which the eluate is collected. A 5-, 10-, 25-, or 50-ml volumetric flask will fit the 10/30, standard-taper, male, ground-glass joint. Initial results indicate that the method should be satisfactory. Further work on the method will be reported in the next quarterly report.

PILOT PLANT CONTROL

C. E. Lamb

The following factors are being studied to improve the determination of plutonium by the thenoyltrifluoracetone (TTA)-xylene extraction method:[6] (1) prevention of zirconium extraction into the TTA-xylene phase, (2) determination of the maximum tolerance of uranium in the extraction, and (3) determination of the feasibility of using a ferrous salt instead of a ferric salt in the method. Progress on the improvement of this method will be discussed in the next quarterly report.

HRE ANALYSES

U. Koskela

Samples from the HRE reflector have been analyzed for D_2O content by specific gravity measurements for which 10-ml volumetric flasks were used as pycnometers. The falling-drop method for the determination of D_2O is still being investigated.[7]

ISOLATION ANALYSES

J. H. Cooper

The Isolation Analyses group started control and product analyses for the Isolation Process in April 1952. The control analyses, which consist of plutonium, uranium, and acid determinations, are used primarily to check the progress of product purification. Weight, specific gravity, volume, and concentration of the plutonium and uranium products are determined before shipment. The plutonium determination is made potentiometrically by using the ORNL automatic titrator with a microburet. Macrotitration is used for assaying the uranium products. Micro amounts of uranium in plutonium products are determined polarographically.

---

(6) B. F. Rider and R. M. Nolin, *Analytical Control Methods for Purex*, KAPL-572, p. 51 (April 27, 1951).

(7) U. Koskela, "HRE Analyses," *op. cit.*, ORNL-1276, p. 67.

TABLE 9. SUMMARY OF ANALYTICAL SERVICE WORK AT X-10 SITE FOR PERIOD MARCH 27 THROUGH JUNE 26, 1952

	NO. OF PERSONNEL		ORNL DIVISIONS REQUESTING ANALYSES														OTHERS REQUESTING ANALYSES				
	TECHNICAL	NONTECHNICAL	ANALYTICAL CHEMISTRY	ANP	CHEMICAL TECHNOLOGY	CHEMISTRY	ELECTROMAGNETIC	ENGR. AND MAINT.	HEALTH	HEALTH PHYSICS	METALLURGY	OPERATIONS	PHYSICS	REACTOR TECHNOLOGY	SOLID STATE	REED	ARGONNE NAT'L. LAB.	HRE	K-25	TVA	TOTAL DETERMINATIONS
GROUP MAKING ANALYSES			Number of Determinations																		
Activation Analyses	2	4	216	2	209	96				3		129	26								681
General Analyses	5	6			1,286	188		21			367	22	5		105			22			2,016
General Radiochemical	4	6			6,727	71				52										397	7,247
HRE	2	3														827					827
Ionic Analyses	8	1		30	92	284						2		104							512
Isolation Analyses	1	3			861																861
Laboratory and Semi-Works Control	2	11			12,691	221					59	116	2								13,089
Optical and Electron Microscopy	3	1			189	217					60			156							622
Pilot Plant Control	8	14			17,223																17,223
Radiochemical Analyses	6	0		11	46	26	5			30		147						25	1		291
Radioisotope Production Control	4	18			2,780	569						6396					45				9,790
Spectrochemical Analyses	5	0	29	4	647	98		15	16	1	133	45	11	73				7			1,079
TOTAL	50	67	245	47	42,751	1770	5	36	16	86	619	6857	44	333	105	827	45	54	1	397	54,238

R. W. Foster[8] is presently developing the analytical methods for SCRUP dissolver solutions. Plutonium is separated from the uranium on a Dowex-Al resin column and titrated potentiometrically with the ORNL automatic titrator. The uranium is eluted from the same column and determined by potentiometric titration.

[8] DuPont Company.

ANALYTICAL CHEMISTRY DIVISION - Y-12 SITE

RESEARCH AND DEVELOPMENT

R. Rowan, Jr.

ANALYSIS OF ALKALI HYDROXIDES

W. K. Miller D. L. Manning

The development of methods for the determination of extremely small quantities (<0.1 ppm) of impurities in alkali hydroxides has continued.

Vanadium. It has been previously reported[1] that vanadium in concentrations as low as 0.05 μg/ml could be detected by means of the ORNL high-sensitivity polarograph. It appeared, also, that the vanadium could be separated from alkali hydroxides and concentrated by anion-exchange techniques.

Experiments were conducted in an effort to obtain polarograms for samples in which the vanadium had been separated from alkali hydroxides by means of an anion-exchange column. Attempts to obtain well-defined polarograms were not successful. The increase in migration current with increase in applied potential was so great at maximum sensitivity that the recording pen moved off the scale before the half-wave potential of vanadium was reached. Vanadium in the low concentrations encountered could not be detected at lower instrument sensitivities. It is believed that the increased electrolyte content of the solution was a consequence of the introduction of impurities from the anion-exchange resin and eluting agent.

The catalytic effect of small amounts of vanadium upon the reaction between $KBrO_3$ and *p*-phenetidine[2] was investigated as a means of estimating the element. Experiments in which these reagents were added to standard solutions of vanadium free from alkali salts indicated that the lower limit of detection was about 0.001 μg per milliliter. Attempts to apply the test in the presence of alkali salts were unsuccessful. Attempts to separate the element from the matrix by means of anion-exchange techniques[1] prior to the application of the catalytic test were also unsuccessful, chiefly because of the abnormally high result obtained from the blank. Several experiments indicated that the results were not reproducible.

Benzohydroxamic acid, which is reported[3] to be a sensitive colorimetric reagent for vanadium, was tested. The results indicated, however, that this reagent offers no advantage over phosphotungstic acid[1] for the colorimetric determination of vanadium.

An indirect colorimetric test that employs the iodine-starch reaction was investigated for the determination of vanadium. Iodide is oxidized to iodine by vanadium(V), with formation of the blue color in the presence of starch. Sensitivity tests indicated that 0.05 μg of vanadium per milliliter could be detected, but the method is not practical for quantitative work because of the rapid increase in color intensity that results from air oxidation of the iodide.

Another indirect colorimetric method involves the addition of a known excess of a standard iron(II) solution to slightly acid solutions containing vanadium(V) and the measurement of the

(1) W. K. Miller, D. L. Manning, and J. E. Lee, Jr., "Determination of Impurities in Lithium Hydroxide," *Analytical Chemistry Division Quarterly Progress Report for Period Ending March 26, 1952*, ORNL-1276, p. 69.

(2) L. Szebelledy and M. Ajtai, "Die quantitative Bestimmung von Vanadin mittels aktivierter Katalyse," *Mickrochemie ver Mikrochim. Acta* **26**, 87 (1939).

(3) M. M. Singh and A. K. Das Gupta, "Analytical Uses of Benzohydroxamic Acid," *J. Sci. Ind. Res.* **8B**, 186 (1949).

excess iron(II) colorimetrically by the *o*-phenanthroline method.[4] It is necessary to apply a correction factor for chromium if that element is present. A slightly different procedure,[5] employing the same color reaction and requiring no correction for chromium, involves the reduction of vanadium(V) to vanadium(IV) by hot hydrochloric acid, followed by the addition of a small amount of iron(III). The solution is made ammoniacal in the presence of *o*-phenanthroline, which causes the reduction of the iron(III) by vanadium(IV). The absorbancy of the ferrous-phenanthroline complex is measured after acidification of the solution. Tests have indicated that as little as 0.05 μg of vanadium per milliliter can be detected by this method, which has proved to be the most satisfactory of those tested.

Experiments are being continued in an effort to find a more satisfactory method of separating and concentrating submicrogram quantities of vanadium from alkali hydroxides prior to its determination by the indirect colorimetric method. The ion-exchange method of separation previously described[1] resulted in incomplete (50 to 70%) recovery of vanadium when applied to the large samples that must necessarily be taken in order to obtain the sensitivity (0.01 ppm) desired. Emphasis is presently being centered on the separation of vanadium from the matrix by extraction of the neocupferrate with ether.

ELECTRODEPOSITION OF BISMUTH ON ALUMINUM

W. K. Miller D. L. Manning

The electrodeposition of firm, thin plates of bismuth on aluminum, a problem that has been discussed in a previous report,[6] has been accomplished by a method that involves a careful pretreatment of the aluminum and rigid control of conditions during electrolysis.

The aluminum to be plated is etched[7] by alkali and acid treatments and finally subjected to a nickel "metal dip" process.[7] A thin coating of nickel replaces the oxide film upon the aluminum during the latter treatment. The electrolysis is carried out in a warm (50 to 60°C) nitrate-tartrate bath at 0.1 v by use of a bismuth anode. Since the current is extremely low (0.05 amp) under these conditions, a long plating period is necessary to obtain a coating of appreciable thickness. The quantity of bismuth deposited on the cathode can be estimated from the loss in weight of the bismuth anode, and this value agrees with that calculated from Faraday's law.

SEPARATION OF PHOSPHATE FROM URANIUM, IRON, ALUMINUM, AND CALCIUM

W. K. Miller

The need for an accurate method for the determination of phosphate in uranyl phosphate solutions containing excess phosphoric and perchloric acids has led to an investigation of an ion-exchange method of separating uranyl and phosphate ions. Uranium interferes in the gravimetric method for the determination of phosphate. Although phosphate can be determined colorimetrically in the presence of uranium, the accuracy of the colorimetric method is insufficient for the present purpose.

The ion-exchange method for the separation of phosphate from uranium

(4) F. D. Snell and C. T. Snell, *Colorimetric Methods of Analysis*, 3d ed., Vol. II, p. 314, Van Nostrand, New York, 1949.

(5) A. Gottlieb, "Ortho-Phenanthroline as a Reagent for the Quantitative Determination of Vanadium," *Industrial Chemist* **26**, 448 (1950).

(6) W. K. Miller and D. L. Manning, "Electrodeposition of Bismuth on Aluminum," *op. cit.*, ORNL-1276, p. 72.

(7) E. E. Halls, "Electroplating Aluminum and Aluminum Alloy Components. I. Study of Pretreatments and Dipping Processes," *Metal Treatment and Drop Forging* **18**, 125 (1951).

was extended to include a separation of phosphate from iron, calcium, and aluminum in order to facilitate the analysis of phosphate ores.

By passing an acid solution that contained standard quantities of phosphate and uranyl ions through a column of cation-exchange resin, Dowex-50, in the acid form, and finally washing the resin with water until the washings were neutral, all the phosphate was recovered in the effluent, and the uranium was completely retained by the column. The phosphoric acid in the eluates from standard samples could be determined by titration, but in the case of the unknown samples of interest, the end points were not sufficiently sharp because of the presence of a large quantity of strong acid (perchloric). Helrich and Rieman[8] were able to determine phosphate in phosphate rocks by titration after ion-exchange separation, but the acidity was controlled so that the conditions were the same for every titration. Satisfactory results, however, were obtained for perchloric and nitric acid solutions of phosphate and uranium by the well-known magnesium ammonium phosphate method.

In order to determine the conditions for maximum recovery of the uranium from the resin and, if possible, to determine this element in the same sample in which phosphate was determined, a study was made of the elution of uranium from the resin. The efficiencies of various eluting agents and the effect of variations in flow rate were studied. Solutions of hydrochloric and sulfuric acids of a number of different concentrations, as well as ammonium carbonate, potassium carbonate, and ammonium chloride solutions, were tested as eluting agents. The uranyl solutions, each containing 21.0 mg of phosphate (as KH_2PO_4) and 54.9 mg of uranium (as $UO_2(NO_3)_2$), were passed into columns that contained 75 ml of cation-exchange resin, Dowex-50, and eluted at flow rates of approximately 5 ml/min. The eluates were collected in 100-ml portions that were analyzed colorimetrically for uranium. The results are shown in Table 10.

From the data in Table 10 it is concluded that sulfuric and hydrochloric acids are the best eluting agents for uranium among those tested. Sulfuric acid is slightly more efficient than hydrochloric, but the latter acid offers an advantage from the standpoint of volatility. Although the eluting power of the two acids, in general, increases with increased strength, 6 *N* HCl was only slightly better than 4.5 *N* HCl.

The ability of both sulfuric and hydrochloric acids to elute uranium from the cation-exchange column probably depends, at least in part, upon the conversion of uranium to anionic complexes. Since uranium forms a relatively strong anionic complex with carbonate ions, it was believed that an alkali carbonate solution would serve as an efficient eluting agent. The data shown in Table 10, however, indicate that this prediction was not verified.

In order to observe the effect of flow rate on the quantity of uranium eluted per unit volume of eluate, five 2.5-cm (ID) columns were prepared; each column contained approximately 30 ml of Dowex-50 in the hydrogen form. A solution containing 275 mg of uranium was introduced into each column, and elutions were made with 6 *N* H_2SO_4; different flow rates were used in each column. Uranium was determined in the successive 100-ml portions of the eluate that was collected. As expected, the volume required for eluting the uranium decreased with decrease in flow rate.

(8) K. Helrich and W. Rieman, III, "Determination of Phosphorus in Phosphate Rock. Separation from Cations by Ion-Exchange Resin," *Anal. Chem.* **19**, 651 (1947).

TABLE 10. ELUTION OF URANIUM FROM A CATION EXCHANGE COLUMN - EFFICIENCY OF ELUTING AGENTS

ELUTING AGENT	NORMALITY OF ELUTING AGENT	RECOVERY OF URANIUM (%)*				
		Cumulative Volume of Eluate				
		0-100 ml	0-200 ml	0-300 ml	0-400 ml	0-500 ml
HCl	1.5	0.2	0.4	5.5	12.4	24
	3.0	20	55	71	80	84
	4.5	47	74	83	87	89
	6.0	53	73	80	84	86
H_2SO_4	2.0	2	29	55	73	81
	4.0	56	87	93	95	96
NH_4Cl	1.0	0.2	0.6	2.1	5.2	9.9
	2.0	12	34	46	52	57
K_2CO_3	3.0	1.8	2.0	4.4	19.4	19.6
$(NH_4)_2CO_3$	2.0 (evolution of CO_2 prevented completion of experiment)					

*Determined by the analysis of the separate 100-ml volumes of the eluates.

Apparently, the flow rate of 3.6 ml/min is greater than, or equal to, the limiting value below which the ratio of uranium eluted to volume of eluate is not further increased.

Capacity tests at flow rates of both 1 ml/min and 10 ml/min indicated that the adsorptive capacity of the resin (Dowex-50, 50 to 100 mesh, hydrogen form) for uranium was 45.8 mg (0.38 milliequivalents) of uranium per milliliter of resin.

The success of the ion-exchange separation of phosphate and uranium led to a testing of the same procedure for the separation of phosphate from other cations (iron, calcium, and aluminum) and subsequent recovery of the cations. Complete isolation and recovery of phosphate were obtained, and it was possible to recover calcium and iron completely in approximately 200 ml of eluate by elution with 4.5 *N* HCl. Although the bulk of aluminum was eluted by the same volume of HCl, traces of the element were still being detected in the eluate after 1 liter of the acid had been passed through the column.

The large volume of HCl required to remove aluminum from the cation-exchange column precluded the use of HCl for the purpose, at least under the conditions described. Tests were made of eluting agents capable of converting aluminum to an anionic form which could be washed rapidly from the resin. Fluoride, tartrate, and oxalate were considered for use as eluting agents; but since these materials would have to be removed in later operations, they should be avoided, if possible. One experiment was carried out with 4 *M* tartaric acid as an eluting agent for aluminum. The bulk of the tartaric acid in the eluate was precipitated as potassium hydrogen tartrate at pH 3.6. The solution was then evaporated, and an attempt was made to destroy the remainder of the tartaric acid by heating with successive portions of nitric acid. The results were discouraging. Because of the difficulty encountered

in destroying the tartaric acid, no further tests of this eluting agent were made.

Since a strong base converts aluminum to the aluminate ion, $AlO_3^{\equiv}$, attempts were made to remove aluminum from the resin by eluting with NaOH solution. About 500 ml of 4 *M* NaOH was insufficient to elute 50 mg of aluminum from the column, as evidenced by colorimetric (aluminon reagent) and gravimetric tests. Sodium hydroxide appears to have about the same eluting power for aluminum as does hydrochloric acid of comparable molar concentration.

A method that proved to be satisfactory, although very time-consuming, involved retaining the cations on a minimum quantity of resin, washing out the phosphate, and finally drying and igniting the resin. The ash was fused with carbonate, the melt was dissolved, and the cations were determined in the solution. Complete recovery of 50 mg of iron and 50 mg of aluminum was obtained by this procedure from four solutions, each of which contained 140 mg of phosphate ion.

Three tests were made of an anion-exchange resin (Dowex-1, chloride form) as a means of retaining phosphate from solutions containing ferric and aluminum phosphates while allowing iron and aluminum to pass through the column. Phosphate was not even partly retained in the case of any of the solutions but was completely removed by the resin from an aqueous solution of KH_2PO_4. It is believed that the failure of the column to retain phosphate in the former tests was caused by the high acidity of the solutions, which was necessary to prevent precipitation of phosphates, rather than by the presence of iron or aluminum.

A satisfactory method for the separation of phosphate from the cations and subsequent recovery of the cations from the resin was found by employing a reversible column that allowed the cations to be eluted in a backward direction. The column consisted of a body section with female ground-glass joints of equal size sealed to each end, and funnel and stopcock sections with corresponding male joints. After the cations on the cation-exchange resin (Dowex-50, hydrogen form) were retained, the column was inverted, the funnel and stopcock sections were exchanged in position, and the cations were eluted with 4.5 *N* HCl in the opposite direction of their original introduction. In this manner it was found that 50 mg of iron and 50 mg of aluminum could be eluted completely in a volume of 200 ml at a flow rate of approximately 10 ml/min. Satisfactory results were obtained in the analysis of standard samples that contained 50 mg of iron, 50 mg of aluminum, and 200 mg of KH_2PO_4.

The separation of phosphate from the cations of uranium, aluminum, iron, and calcium will greatly facilitate the accurate analyses of many types of samples. Although iron and aluminum can be determined volumetrically without prior separation, the removal of phosphate will render these cations more readily determinable. For samples high in phosphate, such as phosphoric acid leaches, or for samples that require highly accurate analyses, a prior separation is essential.

ANALYTICAL STUDIES OF REACTOR FUELS AND THEIR COMPONENTS

J. C. White W. J. Ross
C. M. Boyd C. K. Talbott

A significant change in the composition of the molten fluoride fuels that was instituted during the past quarter was the replacement of beryllium fluoride by zirconium fluoride as a major component. This replacement necessitated a review of the analytical methods that had been applied to previous fuel mixtures.

Methods for the determination of zirconium in fuel mixtures have also been studied, and further attention has been given to the development or adaptation of methods for the analysis of the separate starting components of fluoride fuel mixtures.

Determination of Major Components of Fluoride Eutectics

Total Alkali Metals. The determination of total alkali metals in fluoride eutectics by a method that makes use of ion-exchange resins has been discussed in previous reports.[9, 10] The same method, which has been used for the separation of uranium from alkali metals by adsorption of its sulfate complex on an anion-exchange resin, has now been extended to fuels that contain both uranium and zirconium. Zirconium is also adsorbed by anion-exchange resins in the form of an anionic sulfate complex. The alkali metals, in this case, are eluted from the column with water instead of dilute acid, since the zirconium complex is eluted by acids.

Sodium, Potassium, and Lithium. The separation of the alkali metals, lithium, sodium, and potassium, has been described.[10] The isolation of lithium is accomplished by extraction of the alkali chlorides with 2-ethylhexanol,[11] whereas the separation of sodium and potassium is achieved by an ion-exchange method. Although the ion-exchange procedure is slow, it has the advantage of very little attention being required by the operator.

After the separation of sodium and potassium by the ion-exchange procedure, these elements are present as the chlorides in individual portions of eluate from the column. The solutions also contain excess HCl. The determination of the individual metals is completed by evaporating the solution to dryness, dissolving the residue in water, neutralizing the slight residual free acid with standard sodium hydroxide, and determining the chloride content volumetrically. The chloride content, corrected for the HCl present, is equivalent to the alkali metal content.

Zirconium. A volumetric method for the determination of zirconium is being studied. This method, which is based on the suggestion of Sawaya and Yamashita,[12] depends upon the formation of the zirconium fluoride complex according to the following reactions:

$$ZrO^{++} + 2(OH)^- + H_2O = Zr(OH)_4 \quad (1)$$

$$Zr(OH)_4 + 6F^- = ZrF_6^{=} + 4(OH)^- \quad (2)$$

After the precipitation of zirconium hydroxide by the addition of sodium hydroxide, the pH of the slurry is adjusted to 8.5, and a 15- to 20-fold excess of potassium fluoride is added. Standard nitric acid solution is then added in excess, and the excess is titrated to pH 7.5 with standard sodium hydroxide solution. Under these conditions, the results for zirconium are somewhat low, and it appears that the true relationship is not stoichiometric. The method is sensitive to variation in both concentration of zirconium in the solution and the quantity of excess fluoride added. It appears probable, however, that these difficulties can be overcome by careful control of conditions and by standardization of

(9) J. C. White, W. J. Ross, C. K. Talbott, and C. M. Boyd, "Analytical Studies of Fluoride Eutectics," *op. cit.*, ORNL-1276, p. 72.

(10) J. C. White, C. M. Boyd, W. J. Ross, and C. K. Talbott, "Analyses for Components of Fluoride Mixtures," *Aircraft Nuclear Propulsion Project Quarterly Progress Report for Period Ending June 10, 1952*, ORNL-1294, p. 170.

(11) E. R. Caley and H. D. Axilrod, "Separation of Lithium from Potassium and Sodium," *Ind. Eng. Chem., Anal. Ed.* **14**, 242 (1942).

(12) T. Sawaya and M. Yamashita, "Analytical Chemistry with Fluoride Complex Compounds. V. Acidimetric Determination of Fluorine," *J. Chem. Soc. (Japan)* **72**, 414-16 (1951); *C. A.* **46**, 1911 (1952).

reagents on an empirical basis against known quantities of zirconium. The method is subject to interference by cations, such as uranium, which form insoluble or only slightly soluble hydroxides. Since it appears that this volumetric method would be of some advantage when applied to reactor fuels, the quantitative separation of zirconium and uranium will be investigated. Both ion-exchange and sodium carbonate fusion methods will be tested.

Impurities

Iron. A method for the determination of iron in fluoride eutectics, modified for use in the presence of zirconium, has been described.[13]

Chromium. The choice of an oxidant for chromium in the colorimetric determination of chromium by means of diphenylcarbazide has been the subject of extensive investigation. Tanaka[14] suggested the use of silver peroxide as an oxidant, and a method based upon the use of this reagent has been studied in connection with its possible application to the analysis of reactor fuels.

Silver peroxide can be prepared by the addition of silver nitrate to potassium persulfate solution. The brown precipitate of silver peroxide can be separated from the solution and dried. When the product was added to an acid solution that contained chromium(III), oxidation of the chromium to the hexavalent state took place immediately. A variation of this procedure, which also proved satisfactory, involved the preparation of silver peroxide *in situ* by the addition of silver nitrate and potassium persulfate to a solution containing chromium(III). These studies have indicated that silver peroxide is an excellent reagent for the oxidation of chromium prior to its colorimetric determination, and that either method for effecting the addition of the reagent is suitable.

It is evident that the method of bringing about the oxidation by preparation of the reagent *in situ* is equivalent to the ordinary process of silver-catalyzed persulfate oxidation, since it is not necessary to add more than a relatively small amount of silver ion to effect the oxidation, provided a sufficient quantity of persulfate is present. In fact, it has been demonstrated that the presence of silver ion is not absolutely necessary. The boiling treatment, which is required in order to destroy excess oxidizing agent, apparently catalyzes the reaction between persulfate and chromium(III).

A procedure has been developed for the determination of chromium in which silver nitrate and potassium persulfate solutions are added to a 0.2 *N* sulfuric acid solution containing chromium(III). The oxidation occurs immediately, and after the solution is boiled 10 min to destroy the excess oxidant, the determination is completed in the usual manner. The precision of this modified method compares favorably with that of existing procedures, and the method is more rapid than those previously used. Absorbancy measurements made within 20 min are not subject to errors caused by fading of the color, although the colored complex is not so stable as when perchloric acid is used as the oxidant. After oxidation by this method, there was no reduction of chromium(III) after an overnight period of standing. This indicates the absence of peroxides, which are known to reduce hexavalent chromium in acid solutions.

Nickel. Two changes have been made in the method for the colorimetric determination of nickel by dimethylglyoxime: the absorbancy of the

(13) White, Boyd, Ross, and Talbott, "Analyses for Impurities in Fluoride Mixtures," *op. cit.*, ORNL-1294, p. 171.

(14) M. Tanaka, "Dosage colorimetrique du chrome d'apres la methode au peroxyde d'argent et a lu diphenylcarbazide," *Bull. Chem. Soc. Japan* **23**, 165 (1950).

colored complex is being measured at 446 mμ instead of at 530 mμ, and potassium persulfate has been substituted for ammonium persulfate as the oxidant for nickel.

It has been shown that the absorbancy of the nickel-dimethylglyoxime complex may be measured at 446 mμ, its maximum absorbancy, in the presence of as much as 4 mg/ml of uranium without interference by uranium. The incorporation of this change into the procedure increased the sensitivity of the method nearly twofold, and the revised procedure is applicable to practically all samples received by the ANP Laboratory.

The use of potassium persulfate instead of ammonium persulfate as an oxidant for nickel in this determination has been suggested[15] because of its greater stability. Aqueous solutions of the potassium salt are stable up to 70°C, although one disadvantage in using this material is its slight solubility in water (4.08 g per 100 g of H_2O at 40°C). This change in the method is desirable from the standpoint of precision and reproducibility of results; however, the solution of sufficient potassium persulfate to effect the oxidation of large amounts of nickel is rather slow. This phase of the problem will be further investigated.

Oxygen. The determination of oxygen in fluoride reactor fuels is a problem of considerable importance since the presence of oxygen is believed to be a major factor in the corrosion of container materials. Bromine trifluoride is known to react, with the liberation of oxygen, with almost all the oxides that can possibly be present in these reactor fuels, and it is believed that this reaction will serve as the basis of a method for the determination of oxygen.

An apparatus in which bromine trifluoride can be allowed to react with solid materials has been designed and is now being fabricated. These reactions will take place at elevated temperatures, possibly as high as 350°C, in a nickel-lined reaction bomb. Nickel will be employed as a material of construction throughout the system wherever the reagent or fluorinated products are in contact with metal at elevated temperatures. Those portions of the system that contain only the noncorrosive, gaseous products will be constructed of pyrex glass.

Although a method for the determination of the liberated oxygen has not been fully decided upon, two or three feasible methods are available. A simple gasometric measurement of the oxygen pressure in an evacuated system at low temperature may be used.

Analysis of Components of Fluoride Eutectics

Sulfide and Total Sulfur. The determination of sulfide in alkali fluorides was accomplished by the methylene blue[16] procedure. Since the total sulfur content of these materials is also believed to be significant, a procedure has been devised in which all sulfur compounds are first reduced to sulfide by means of a reducing mixture of hydriodic, hydrochloric and phosphorous acids, and the sulfide is then determined by the methylene blue method. This procedure has proved to be satisfactory for a large number of fluoride eutectics in addition to alkali fluorides. Table 11 shows the total sulfur content of the major components of fluoride fuels.

Zirconium Oxide and Oxyfluoride. A method for the determination of zirconium fluoride has been described.[17]

(15) H. H. Willard, private communication to J. C. White, April 1952.

(16) C. J. Rodden (Editor-in-Chief), *Analytical Chemistry of the Manhatten Project*, p. 311, McGraw-Hill, New York, 1950.

(17) White, Boyd, Ross, and Talbott, "Analyses for Impurities in Fluoride Compounds," *op. cit.*, ORNL-1294, p. 172.

Water. In connection with cold critical experiments, the water content of a mechanical mixture of the solid materials, NaF, KF, ZrO_2, and carbon (graphite), is of importance. For this reason, attention has been given to the determination of water in the fluoride components of this mixture. The lower limit for the determination should be not greater than 0.05%. The direct titration of water in fluoride salts by the Karl Fischer reagent has been tested, but this method is unsatisfactory.[17]

The limitation of sample size also constitutes a serious disadvantage in the application of a method based on ignition of the sample. The problem of determination of water by ignition of the fluoride is further complicated by the hydrolysis of the salt at high temperatures to form the metal hydroxide and hydrogen fluoride. A study was made of the loss in weight of sodium fluoride with increase in temperature of heating. After saturated solutions of the salt were heated, pH measurements were made on them in order to obtain an indication of the extent of hydrolysis of sodium fluoride caused by heating at the various temperatures. The results are given in Table 12.

These data indicate that hydrolysis is a real factor at elevated temperatures. It appears that temperatures above 200°C must be used to remove free hydrogen fluoride. A test was made in which the hydrogen fluoride liberated during heating was trapped in sodium carbonate, and the resulting carbon dioxide was caught in an Ascarite absorber and weighed. The test indicated the presence of 0.3% hydrogen fluoride and 0.36% water, but the results are believed not to be reliable because of the very high blank results obtained for the absorption tubes.

Tests are currently being made of a method in which large sodium fluoride samples (of the order of 20 g) are

TABLE 11. TOTAL SULFUR CONTENT OF SOME FLUORIDE SALTS

FLUORIDE	LOT NO.	SULFUR (ppm)
Sodium	3293	190
Potassium	6272	205
Lithium	117B	560
Zirconium		< 2
Uranium	2244	< 2
Uranium	1855	< 2

TABLE 12. EFFECT OF HEATING ON HYDROLYSIS OF SODIUM FLUORIDE

TEMPERATURE (°C)*	LOSS IN WEIGHT OF NaF (%)	pH OF SATURATED AQUEOUS SOLUTION OF HEATED SALT
25		7.0**
110	0.06	8.1
200	0.08	8.7
400	0.27	8.9
500	0.33	9.5
650	0.39	9.9
1030		10.3
110***	0.03	8.2

*Period of heating was approximately 16 hr (overnight).

**Original salt contained 0.11% free hydrogen fluoride, as determined by titration.

***Vacuum oven.

refluxed with xylene, and the water that is extracted from the salt is determined by the Karl Fischer method.

ANALYSIS OF URANYL SULFATE SOLUTIONS

O. Menis

Free Acid. Free acid, in concentrations ranging from 0.02 to 0.1 *N*, in uranyl sulfate and fluoride solutions was determined by the potentiometric titration procedure described previously.[18] The average deviation for the results of triplicate determinations did not exceed 5%. The addition of NaF to the sulfate solutions helped to produce a more abrupt inflection point in the potentiometric curve and facilitated the determination.

Uranium(IV). The determination of uranium(IV) by measurement of the absorbancy of its complex in a phosphate medium has been discussed.[19] The study of this method has continued in order to establish the conditions under which the molar absorbancy of the uranium(IV)-phosphate complex is least affected by the presence of foreign ions. Solutions containing uranium(IV) and UO_3 which ranged from 17 to 99.5% (in ten steps of unequal intervals) in phosphoric acid were studied in order to observe the effect of the principal component, UO_3. In the course of these experiments, an unexpected complication arose. It was found that some batches of UO_3 contained traces of impurities that greatly affected the stability of the colored uranium(IV)-phosphate complex. The higher the phosphoric acid concentration, the greater was the decrease in absorbancy with time. The complex was most stable in 17% phosphoric acid solution.

At 621 mμ, the presence of as much as 4 mg of UO_3 per milliliter of final solution had no significant effect upon the colorimetric factor for uranium(IV). The molar extinction coefficient was 30.1. Under those conditions the stability of the complex was satisfactory; there was no serious decrease in absorbancy during a period of 2 hours. In these solutions, the presence of 6×10^{-4} moles per milliliter each of KNO_3, K_2SO_4, and KCl did not affect the factor.

The principal disadvantage in the use of the dilute, rather than concentrated, phosphoric acid medium for the determination of uranium(IV) is the sacrifice in sensitivity that must be accepted under these conditions. The molar absorbancy index of the complex is higher in 99.5% phosphoric acid than in the 17% acid by a factor of 2.

Work on this problem will continue when UO_3 of known high purity is available.

Nickel (O. Menis, M. L. Drueschel). The accurate determination of nickel in uranyl solutions is an important requirement in HRP corrosion studies, since the amount of soluble nickel present in these solutions is used as the chief indication of the degree of corrosion of the reactor vessel. The dimethylglyoxime method, which has been described in a previous report,[20] was investigated for effecting improvements in accuracy and precision. Such factors as the type of oxidant for nickel (persulfate salt), wavelength, pH, temperature, stability of the complex, uranium interference, range of nickel concentration, and order of addition of reagents were studied.

The substitution of potassium persulfate for the less stable ammonium salt resulted in an improvement in precision. Previously, in order to assure reproducible results in the determination of nickel, a check of

[18] O. Menis, "Analysis of Uranyl Sulfate Solutions," *op. cit.*, ORNL-1276, p. 77.

[19] Menis, "Determination of Uranium(IV)," *ibid.*, p. 86.

[20] O. Menis, C. K. Talbott, and F. E. Jenkins, "Analysis of Uranyl Sulfate Solutions," *Analytical Chemistry Division Quarterly Progress Report for Period Ending June 26, 1951*, ORNL-1113, p. 77.

the quality of each bottle of ammonium persulfate was required. Also, in contrast to the behavior when ammonium persulfate is used, the colorimetric factor (concentration/absorbancy) for the complex does not vary with the quantity of potassium persulfate added in excess of that consumed. Another advantage of using potassium persulfate is that its greater stability permits its use in the form of a saturated solution in place of the solid salt, in order to speed up the procedure.

The selection of the wavelength at which the absorbancy of the nickel-dimethylglyoxime complex should be measured depends on the identity and concentration of other elements in the solution. Rodden[21] suggested that the measurement be made at either 520 or 525 mμ, at which wavelengths uranium does not interfere. The absorption curve for the nickel complex in the potassium persulfate oxidation medium was redetermined, and it can be observed (Fig. 10) that in the region of 515 mμ, there is a plateau in the curve. At 515 mμ, the absorbancy value obtained is less subject to error because of slight variations in the setting of the wavelength scale of the spectrophotometer than at 520 or 525 mμ.

The maximum absorption of the nickel-dimethylglyoxime complex occurs at 446 mμ (Fig. 10). It is well known that at this wavelength the absorbancy of uranyl sulfate solution is significantly high. The use of this wavelength is possible, however, even in the presence of uranium, if a solution of equivalent uranium concentration is used as the reference solution. The measurement is made by placing a solution of uranyl sulfate, equivalent in concentration to that of the unknown, in the reference cell and setting the absorbancy reading to zero by widening the slit of the Beckman spectrophotometer, thus improving the

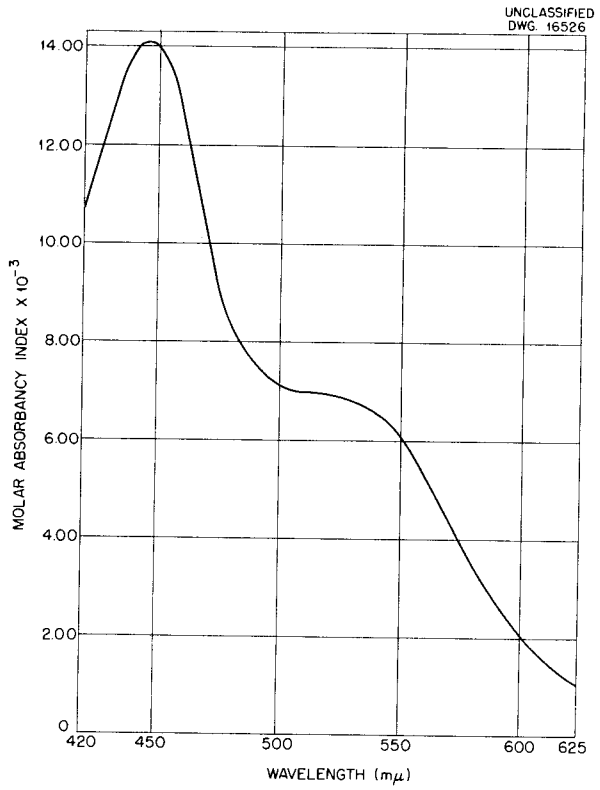

Fig. 10. Absorption Spectrum of Nickel-Dimethylglyoxime Complex.

sensitivity. This advantage is realized until the uranium concentration is so high and the slit so wide that the spectral band width becomes large enough to cause deviation from Beer's law. By experiment it was found that a uranium concentration of 4 mg/ml in the final volume can be tolerated without loss of sensitivity or absorption law deviations.

For the highest degree of precision at the 446 mμ wavelength, the concentration of uranium in the reference cell and sample must be matched within 2%, whereas, as would be expected, at the 515 mμ wavelength, even a variation of 10% in uranium concentration produces no noticeable difference in the absorbancy readings.

The effect of pH on the sensitivity of the method and the stability of the nickel-dimethylglyoxime complex was also established at the two wavelengths.

(21) Rodden, *op. cit.*, p. 433-435.

At 446 mμ, the absorbancy of solutions reaches a maximum between pH 10.0 and 10.5; and at 515 mμ, maximum sensitivity is obtained at pH 9.5. Under these conditions there were no changes in absorbancy values during the period from 1.0 to 1.5 hr after the addition of the chromogenic agent and adjustment of the pH of the solution.

On the basis of these findings, a study was made of the degree of precision attainable by this method. To each sample of a standard solution of nickel of known uranyl ion concentration, the reagents were added in the following order: 1 ml of 5% (wt/vol) potassium persulfate, 10 ml of 30% (wt/vol) ammonium citrate, and ammonium hydroxide solution until a pH of 10.3 ± 0.2 was reached. After an oxidation period of 1/2 hr, the absorbancy was measured at 446 mμ against a reference solution containing the same concentrations of uranyl ions and the reagents.

The colorimetric factors obtained for solutions that contained nickel in concentrations ranging from 1.93 to 7.72 μg/ml are shown in Table 13. The standard deviation of only 1.4% indicates excellent agreement with Beer's absorption law and an unusually high degree of precision for a colorimetric method.

The high degree of precision attained, even at high absorbancy readings (Table 13), is in agreement with the theory as discussed by Ayres.[22] Although the relative error of measurement is increased by virtue of the high absorbancy range of the samples, the instrument error is reduced when the 0.1 scale of the Beckman spectrophotometer is used, and the net effect is an increase in over-all precision.

Future work will include a study of the temperature effect, of the interferences of other ions at the 446 mμ wavelength, and of the extension of the range to lower concentrations of nickel.

Carbon. Modifications of a wet combustion method[18] that would improve the precision of the method and reduce the time required for determining carbon in uranyl solutions have been investigated.

Following the wet combustion, the final determination of the evolved CO_2 by a microgravimetric method is time-consuming and involves the use of a microbalance, with the accompanying sources of error and rigid requirements of technique and control of experimental conditions. Because of the greater rapidity of volumetric procedures and some of the characteristic difficulties of the gravimetric

TABLE 13. PRECISION OF THE IMPROVED DIMETHYLGLYOXIME COLORIMETRIC METHOD FOR THE DETERMINATION OF NICKEL

Uranyl ion concentration: 4 mg per ml
Cell length: 1 cm
Temperature: 25.0 ± 0.1°C
Slit width: 0.12 mm

NICKEL AS $NiSO_4$ (μg/ml)	ABSORBANCY AT 446 mμ	FACTOR*
1.93	0.452	4.27
1.93	0.454	4.25
2.89	0.689	4.19
2.83	0.683	4.23
3.86	0.890	4.34
3.86	0.905	4.27
4.82	1.163	4.14
4.82	1.139	4.27
5.78	1.389	4.16
5.78	1.391	4.16
6.75	1.598	4.22
6.75	1.570	4.30
7.72	1.794	4.30
7.72	1.840	4.20
	Average	4.23
	Standard Deviation	0.06

*Micrograms of Ni per milliliter divided by absorbancy.

(22) G. H. Ayres, "Evaluation of Accuracy in Photometric Analysis," *Anal. Chem.* **21**, 652 (1949).

procedure, the original method and apparatus previously described[18] have been modified to the extent that the final determination of the CO_2 is accomplished by absorption of the gas in standard barium hydroxide solution and titration of the excess basicity.

The combustion apparatus consists of a 150-ml reaction flask equipped with a separatory funnel through which the sample and oxidizing mixture are introduced, an air or nitrogen inlet tube protected by a CO_2 absorption tube, and a short condenser. The condenser is connected through a spray trap to a sulfuric acid bubbler and through another spray trap to the absorption tower, described elsewhere.[23] The sample is heated in the reaction flask at 250°C in contact with the combustion mixture, and the evolved CO_2 is swept into the absorption tower by a stream of nitrogen. At the end of the reaction, the barium hydroxide solution is filtered (to remove $BaCO_3$) into an air-free titration cell and titrated potentiometrically with a standard solution of HCl.

The results are shown in Table 14 for a series of uranyl sulfate solutions containing 40 mg of uranium to which was added 60 to 600 μg of carbon in the form of absolute ethyl alcohol.

The accuracy of the determination is limited principally by the relatively large blank results that range from 30 to 60 μg of carbon. The high blank is attributed to the SO_3 fumes from the oxidation mixture that are not completely absorbed by the acid scrubber. It is planned to modify the combustion mixture so as to eliminate the H_2SO_4 component or to employ a more efficient scrubber for the SO_3 fumes.

Zirconium. Studies dealing with the determination of microgram quantities of zirconium in uranyl sulfate solution have been described.[24] Recently two new approaches were taken to this problem. Attempts have been made to separate zirconium from the solution by chemical means and to determine zirconium spectrophotometrically in the presence of relatively large amounts of uranium.

Tests were made of the separation of zirconium from uranium by absorbing the latter element on an anion-exchange resin, Dowex-1, and by precipitating zirconium in the presence of a carrier in an ammoniacal carbonate solution. It was found that the hydrochloric acid (2 to 6 *M*) used in the elution step of the ion-exchange method dissolved enough of the resin to interfere in the colorimetric determination of zirconium. Efforts to destroy the dissolved resin by digestion with nitric and perchloric acids resulted in incomplete recovery of zirconium.

Tests were made of various modifications of a method for the separation of zirconium from uranium. The method depends on the precipitation of $Zr(OH)_4$ from an ammoniacal carbonate solution

(23) C. G. Goldbeck, "The Volumetric Determination of Carbon in Uranium Metal," *New Brunswick Laboratory Progress Report for the Period Ending June 30, 1951*, NYO-2021, p. 164.

(24) Menis, "Analysis of Uranyl Sulfate Solutions," *op. cit.*, ORNL-1276, p.76.

TABLE 14. DETERMINATION OF CARBON IN URANYL SULFATE SOLUTION BY WET COMBUSTION

CARBON* (μg)		RECOVERY (%)
Present	Found	
60	58	97
60	71	118
60	71	118
60	51	95
60	48	80
600	540	90
600	520	87
600	520	87
600	550	92

*Present as ethyl alcohol.

in which the uranium is in the complexed form.[25] Aluminum and gallium were employed as gathering agents. The method of precipitating from solutions at a pH 8.4 and 6.0, followed by overnight digestion, and then centrifuging or filtering, however, failed to yield reproducible results for the recovery of microgram quantities of zirconium.

Although all attempts to separate zirconium quantitatively from uranyl solutions failed, the colorimetric determination of microgram quantities of zirconium by means of chloranilic acid in the presence of high concentrations of uranium appears to be feasible provided a solution of equivalent uranium concentration is used in the reference cell. The absorbancy of the zirconium-chloranilic acid complex can be measured in the wavelength region 335 to 355 mμ, where there is a minimum in the absorption curve for uranyl sulfate.[26]

[25] Rodden, *op. cit.*, p. 31.

[26] O. Menis, "Absorption Spectra of Uranyl Sulfate Solutions," *op. cit.*, ORNL-1276, p. 82.

In order to find the optimum conditions for this determination, such variables as pH and quantity of reagent were investigated. The effects of the presence of various anions were also studied. Sulfate, perchlorate, and acetate ions, in the presence of uranyl ions, all have a marked influence on the absorbancy of the zirconium-chloranilic acid complex. In the absence of uranyl ions, acetic acid enhances the absorbancy of the complex, but as little as 0.5 mg of uranium per milliliter of solution in this medium interferes; the reference solution has such a high absorbancy that the spectrophotometer cannot be balanced. In perchloric acid solution, the sensitivity of the method depends on the acid concentration, the maximum absorbancy of the complex occurring in 2 *M* perchloric acid solution.

Values of the colorimetric factor (concentration/absorbancy) for the zirconium-chloranilic acid complex, determined from measurements at three different wavelengths in uranyl sulfate solutions of various concentrations, are listed in Table 15. At the longest

TABLE 15. VALUES OF THE COLORIMETRIC FACTOR FOR THE ZIRCONIUM-CHLORANILIC ACID COMPLEX IN THE PRESENCE OF URANYL SULFATE

Fifty-ml final volume, 2.0 *M* $HClO_4$, and 1.71×10^{-4} moles of chloranilic acid. Optical density (absorbancy) measured in 1-cm cells by means of a Beckman model DU spectrophotometer.

URANIUM AS UO_2SO_4 (mg/ml)	WAVELENGTH					
	335 (mμ)		350 (mμ)		355 (mμ)	
	Factor*	Standard Deviation**	Factor*	Standard Deviation**	Factor*	Standard Deviation**
0	2.68	0.05	3.42	0.02	4.53	0.03
1.0	2.83	0.03	3.53	0.08	4.58	0.13
2.0			3.75	0.14	4.72	0.16
4.0			5.26	0.09	5.55	0.06
6.0					6.72	0.25

*Unit: Micrograms of Zr per milliliter divided by absorbancy. Average factor obtained for a series of six determinations on standard solutions of zirconium ranging in concentration from 1.2 to 3.2 μg per ml.

**Calculated from six determinations.

wavelength (355 mμ), Beer's law is obeyed, even in the presence of 6 mg of uranium per milliliter as uranyl sulfate in the final solution, although the sensitivity is decreased if the uranium concentration is greater than approximately 2 mg/ml. The presence of 2 mg of uranium per milliliter, as uranyl sulfate, does not decrease the sensitivity appreciably; only a 2% change in the factor was observed.

In the absence of sulfate ions, 6 mg of uranium per milliliter does not reduce the absorbancy of the zirconium-chloranilic acid complex. A prior separation of sulfate ions would therefore increase the sensitivity of the method. It may be possible to remove sulfate ions effectively by precipitation as lead sulfate or ignition of uranyl sulfate to the oxide in the presence of boric acid. Both lead and boron were found to cause no interference with the chloranilic acid method. The application of these methods for removing sulfate will be tested.

Tungsten. The pretreatment process for stainless steel bombs used in HRP corrosion experiments sometimes results in traces of tungsten being introduced into the uranyl sulfate solutions that are placed in the bombs. For this reason, methods for separating and determining microgram quantities of tungsten have been investigated.

The separation of tungsten from uranium is ordinarily accomplished by means of α-benzoinoxime.[27] This is, however, a very lengthy procedure, and in order to reduce the number of steps and decrease the time required for the separation, the application of a tributyl phosphate (TBP) extraction procedure to the problem has been studied briefly. After the removal of uranium in the organic phase, the determination of tungsten in the aqueous phase is carried out by a method described by Freund and coworkers.[28] The sensitivity and precision of the colorimetric procedure of Freund were rechecked.[29] For a series of standard solutions containing from 0.2 to 1.0 μg of tungsten (as sodium tungstate) per milliliter of solution, the colorimetric factor for tungsten (μg/ml/absorbancy) was 1.75 with a standard deviation of 1.6%; 10-cm absorption cells were used in this case.

The separation of uranium from tungsten by TBP extraction of the uranium from a nitric acid solution was carried out by a procedure based on the work of Bartlett.[30] The results obtained for the recovery of tungsten after TBP extraction of a series of standard solutions are shown in Table 16. The average recovery was of the order of 90%. Since the accuracy to be expected for this determination, on the basis of the results obtained, is sufficient for the present purposes, no further work is contemplated.

ANALYSIS OF THORIUM SLURRIES

T. R. Phillips O. Menis

In connection with the study of thorium oxide slurries in the HRP, the determination of thorium in both the solid and the liquid phases is required. It is also necessary to determine the corrosion products (iron, chromium, and nickel) in the slurries. Methods for dissolving the oxide and for determining thorium gravimetrically were investigated. A new colorimetric method for determining microgram

(27) Rodden, *op. cit.*, p. 456.

(28) H. Freund, M. L. Wright, and R. K. Brookshier, "Colorimetric Determination of Tungsten," *Anal. Chem.* **23**, 781 (1951).

(29) O. Menis, C. K. Talbott, F. E. Jenkins, and J. E. Lee, "Trace Metal Determinations in Uranyl Salt Solutions," *Analytical Chemistry Division Quarterly Progress Report for Period Ending September 10, 1951*, ORNL-1129, p. 65.

(30) T. W. Bartlett, *Some Factors Influencing the Use of Tributyl Phosphate for the Extraction of Uranium in Analysis*, K-706 (Feb. 27, 1951).

TABLE 16. RECOVERY OF TUNGSTEN FROM URANYL SOLUTION AFTER REMOVAL OF URANIUM BY TBP EXTRACTION

URANYL SOLUTION		TUNGSTEN (μg)		RECOVERY (%)
Compound	Uranium (mg/ml)	Present	Found	
UO_2SO_4	40.0	40.0	36.8	92
UO_2SO_4	40.0	40.0	36.0	90
UO_2SO_4	40.0	50.0	43.0	86
UO_2F_2	120.0	30.0	29.4	98
UO_2F_2	120.0	30.0	27.6	92

quantities of thorium is being developed.

Thorium in thorium oxide was determined gravimetrically by dissolving the oxide in nitric and hydrofluoric acids,[31] precipitating the thorium with benzoic acid,[32] and finally igniting to thorium oxide. Six determinations by this method yielded an average value of 87.1% thorium with a standard deviation of 0.4%. Analyses of the same sample by two different analytical service laboratories that used the double oxalate and double ammonia precipitation methods yielded 86.4 and 87.1% thorium, respectively, in the oxide. Thus, the benzoic acid method compares well with the other methods.

In order to reduce or eliminate the interference of fluoride in subsequent operations, a determination was made of the minimum amount of fluoride ion necessary to cause the dissolution of the oxide. On heating the oxide for 7 min in 10 ml of a 10 *N* nitric acid solution in the presence of as little as 0.002 mmole of fluoride, it was found that 0.25 mmoles of ThO_2 was completely dissolved.

The procedures used for the estimation of corrosion products (iron, chromium, and nickel) in uranyl systems were shown to be equally applicable for determining these elements in the presence of thorium, and no additional development work is required.

A sensitive method is required for the estimation of thorium dissolved in the aqueous phase of the ThO_2 slurries. The procedure described by Thomason *et al.*[33] is at present the most widely used colorimetric method. A still more sensitive method was desired, and it was decided to investigate the chloranilic acid (2,5-dichloro-3,6-dihydroxyquinone) reagent which according to Thamer[34] yields an intense color with thorium. This reagent is inexpensive, readily available, and quite stable according to Tyner.[35] The applicability of this reagent to the quantitative estimation of microgram quantities of thorium is being studied. The effects of pH, the presence of foreign ions, and quantity

(31) Rodden, *op. cit.*, p. 163-4.

(32) M. Venkataramaniah, C. Lakshman Rao, and Bh. S. V. Raghava Rao, "The Determination of Thorium and Its Separation from the Rare Earths by Means of Benzoic Acid," *Analyst* **77**, 103 (1952).

(33) P. F. Thomason, M. A. Perry, and W. M. Byerly, *A Colorimetric Method for the Determination of Microgram Amounts of Thorium*, ORNL-90 (July 9, 1948).

(34) B. J. Thamer and A. F. Voigt, "Zirconium Chloranilate Complexes," *J. Am. Chem. Soc.* **73**, 3197 (1951).

(35) E. H. Tyner, "Determining Small Amounts of Calcium in Plant Materials," *Anal. Chem.* **20**, 76 (1948).

of excess reagent on the sensitivity and stability of the complex are being investigated, and the wavelength at which the variation of these factors has the minimum effect will be selected. Measurements of the absorbancy of the complex in perchloric acid solution indicated that the sensitivity increases with increasing pH. In a solution buffered with acetic acid and sodium acetate to pH 2.6 ± 0.1, at the wavelength 345 mμ, the absorbancy was a maximum in the presence of an 8- to 20-molar excess of chloranilic acid.

In solutions of pH 3 to 4, the absorbancy was constant but the sensitivity was lowered by 5%. At 345 mμ, Beer's absorption law is obeyed in the range of 0.5 to 7.0 μg of thorium per milliliter in the final solution. The colorimetric factor was 7.5 μg of thorium per milliliter per absorbancy unit, with a standard deviation of 3%. In a final volume of 10 ml, and by use of a 1-cm absorption cell, as little as 1 μg of thorium can be determined.

The next phase of work will involve a study of interferences of other ions on the colorimetric determination of thorium by chloranilic acid.

SOLUBILITY STUDIES

M. L. Druschel O. Menis

The initial steps in a study of the solubilities of some corrosion and fission products in uranyl fluoride solutions were discussed in a previous report.[36] Studies have now been made of the solubility of ruthenium hydroxide and of anhydrous nickel fluoride in these solutions at 25°C.

Ruthenium hydroxide (100 mg), prepared as described in a previous report,[37] was added to 50 ml of UO_2F_2 solution that contained 100 mg of uranium per milliliter. The resulting suspension, contained in a sealed volumetric flask, was placed in a constant-temperature bath at 25.0 ± 0.1°C and agitated continuously. Aliquots were taken daily from these solutions over a period of four days, and the soluble ruthenium was determined colorimetrically in the aliquots by a procedure described in a previous report.[38] The results (Table 17) indicate that equilibrium was reached after 24 hr or less.

The solubility of anhydrous nickel fluoride in UO_2F_2 solutions was studied under similar conditions, but plastic bottles and Tygon-coated magnetic stirring bars were employed to avoid chemical reaction between fluoride and silica from the glass containers. The fluosilicic acid that results from the reaction between HF and glass complexes the fluoride ion and increases the solubility of the nickel fluoride. Two series of tests were made: in the first, 100 mg of nickel fluoride was suspended in 50 ml of uranyl fluoride solution (100 mg of uranium per milliliter); in the second, 300 mg of nickel fluoride was suspended in 50 ml of an identical solution of uranyl fluoride. Colorimetric determinations of nickel were made periodically by a method that has been previously described.[20]

The studies of the solubility of nickel fluoride indicate an increase in solubility with an increase in the quantity of solid salt present. This is, of course, not the behavior to be expected of a pure salt, and further work will be required to ascertain the reason for this apparent discrepancy. The results of the solubility tests are shown in Table 17.

(36) O. Menis and M. L. Druschel, "Solubility of HRE Corrosion and Fission Products in Uranyl Fluoride Solutions," *op. cit.*, ORNL-1276, p. 81.

(37) *Ibid.*, "Preparation of Ruthenium Hydroxide," p. 82.

(38) O. Menis and F. E. Jenkins, "Colorimetric Determination of Ruthenium," *op. cit.*, ORNL-1276, p. 82.

TABLE 17. SOLUBILITIES OF RUTHENIUM HYDROXIDE AND NICKEL FLUORIDE IN URANYL FLUORIDE SOLUTIONS

Solvent: 50 ml of uranyl fluoride solution containing 100 mg of uranium per ml.

Temperature: 25 ± 0.1°C.

SOLID	WEIGHT OF SOLID (mg)	SOLUBILITY (μg of Ru or Ni per ml)			
		24 hr	48 hr	72 hr	96 hr
$Ru(OH)_3$	100	1	1		1
NiF_2	100	2	2	2	2
NiF_2	300		6	6	6

QUALITY CONTROL

R. L. McCutchen

During this period a control program was instituted in the ANP Analytical Laboratory, and the program for the General Analytical Laboratory was revised; the control programs for the HRP Analytical Laboratory and the analytical laboratories at the X-10 site remained essentially unchanged.

The four laboratories participating in the control program reported a total of 1570 determinations during the quarter. A breakdown of the control determinations reported by each laboratory is given.

General analytical	33
HRP analytical	236
ANP analytical	213
Analytical (X-10 site)	1088
Total	1570

General Analytical Laboratory. A revised control program was introduced in the General Analytical Laboratory in an effort to achieve more effective control of the test values being reported and to achieve greater efficiency. The revised procedure, which was suggested by W. J. Youden during his visit in April, eliminates the practice of making duplicate determinations by substituting a system whereby a control sample is definitely related to all other samples processed at that time. The data available at this time are somewhat limited; nevertheless, they are sufficient to indicate that good precision is attainable and that the total number of samples that can be processed during a given time interval can be increased 25 to 50%. It should be noted, however, that Youden's plan is effective only in those cases in which a large number of samples of the same type is being processed on a routine basis.

In Table 18, tentative control limits for aluminum, calcium, and phosphate are given. These values are based on Youden's method for determining precision and will be revised from time to time as additional information indicates that such changes are necessary.

HRP Analytical Laboratory. A control program for the determination of corrosion products in uranyl sulfate solutions was instituted in the HRP Analytical Laboratory during the second quarter of 1951. The program was revised from time to time during the year in order to more closely simulate the type of materials being

analyzed in the HRP Laboratory. During this period it was discovered that uranyl sulfate solutions stored in 2-oz screw-capped bottles were losing moisture to the air. The extent of this loss varied from bottle to bottle and resulted in erratic test results being obtained.[39]

After the discovery that the use of the bottles for storing standard uranyl sulfate solutions was responsible for the lack of precision of the test results, all data accumulated prior to November 1951 were rejected in establishing control limits for the determination of uranium, iron, nickel, chromium, and manganese in the HRP Laboratory. The control limits (expressed as the limit of error of one analysis) reported in Table 19 are based on the test results reported reported during the past six months.

The over-all precision obtained during this quarter is comparable with that determined during the last quarter, although from the percentage of results found outside the control limits it would appear that such is not the case. This apparent discrepancy results from evaluation of the control program on the basis of the deviation (in per cent) from a known value. This was necessary in order to have a basis of

[39] C. D. Susano and R. L. McCutchen, *Statistical Quality Control December 1951 Through February 1952*, Y-B31-344, p. 8.

TABLE 18. STATISTICAL EVALUATION OF CONTROL DATA FOR PURPOSE OF SETTING TENTATIVE CONTROL LIMITS FOR DETERMINATION OF ALUMINUM, CALCIUM, AND PHOSPHATE

DETERMINATION	METHOD	NUMBER OF DETERMINATIONS	CONCENTRATION RANGE (mg/ml)	STANDARD DEVIATION (%)	CONTROL LIMITS (Limit of error, %)*
Al	Fluoride titration	18	5 to 15	2.5	5
Ca	Oxalate precipitation; $KMnO_4$ titration	13	1 to 5	2.5	5
PO_4	Colorimetric	5	1 to 5	0.8	2

*95% probability level.

TABLE 19. STATISTICAL EVALUATION OF PRECISION AND ACCURACY OF TEST RESULTS REPORTED FOR STANDARD URANYL SULFATE SOLUTIONS

DETERMINATION	METHOD	NUMBER OF DETERMINATIONS	CONCENTRATION RANGE (μg/ml)	CONTROL LIMITS (Limit of error, %)		DETERMINATIONS OUTSIDE CONTROL LIMITS* (%)
				Found	Established	
Ni	Dimethyl	43	14 to 60	15	14	9
Cr	Diphenylcarbazide	35	13 to 36	20	18	50
Fe	α,α-Bipyridyl	34	6 to 32	22	20	3
Mn	Periodate	19	5 to 16	42	40	0
U	Jones reductor - dichromate	8	26 to 36**	1.0	1.0	12
U	Jones reductor - ceric sulfate	97	26 to 50**	1.4	1.0	12

*95% probability level.

**(mg/ml).

comparison, since more than one concentration level was represented. Instead of the precision being unsatisfactory, however, it is actually the accuracy of the test results that is poor. The chromium values reported during this period were 25% low, and the nickel values were about 10% high, which undoubtedly accounts for over 5% of the reported values being outside the control limits. The uranium determinations were actually "out-of-control" during this period, with both high and low values outside the control limits being reported. Both the nickel and chromium methods are being investigated to eliminate the respective positive and negative trends noted this quarter.

Since this work was completed, Youden's method for determining precision has been introduced into the laboratory, and a more rigorous control of the accuracy of the test results is being maintained.

ANP Analytical Laboratory. Samples of eight eutectics ($NaF-KF-UF_6$) that contained the corrosion products, that is, iron, nickel, and chromium, were secured for control purposes. Four of the eight eutectics had been previously treated to reduce the corrosive tendencies of the materials. The eight materials were analyzed for uranium, iron, nickel, and chromium by the methods used to test routine eutectic samples. With the exception of the uranium determinations, colorimetric methods were used for all the constituents determined.

The precision of the test results for chromium and iron in the treated samples was better than that obtained on the untreated samples by a factor of 3 to 5 varying with the particular determination. In the case of nickel and uranium, there was no difference between the treated and untreated materials in the precision of the test results (Table 20).

Two probable explanations for the difference in precision of the test results for the treated and untreated eutectics are that the untreated samples are more heterogeneous than the treated materials, or the concentration of iron and chromium is too low to permit good precision for the colorimetric methods being used. It appears that of the two, the latter explanation is probably more nearly correct. Previously, no data were available to indicate the need for either more precise methods or better

TABLE 20. PRELIMINARY INVESTIGATION OF THE ANALYSIS OF $NaF-KF-UF_6$ EUTECTICS FOR THE PURPOSE OF ESTABLISHING CONTROL LIMITS

DETERMINATION	METHOD	SAMPLE CONDITION	NUMBER OF DETERMINATIONS	CONCENTRATION RANGE FOUND	STANDARD DEVIATION (%)	CONTROL LIMITS (Limit of error, %)*
Cr	Perchloric oxidation – diphenylcarbazide	Untreated Treated	33 30	20 to 35 ppm 330 to 1060 ppm	34 8	70 20
Fe	α,α-Bipyridyl hydroxylamine HCl	Untreated Treated	24 24	90 to 445 ppm 1350 to 2180 ppm	47 10	100 20
Ni	Ammonium persulfate dimethylglyoxime	Untreated Treated	31 27	1730 to 3080 ppm 95 to 255 ppm	21 22	45 45
U	Jones reductor – ceric sulfate	Untreated Treated	8 6	55% 55%	0.9 1.3	2 1
U	Potentiometric titration – ferric sulfate	Untreated Treated	16 14	5 to 8% 5 to 8%	1.6 1.5	3 3

*95% probability level.

samples. Since this information indicates such a need, steps will be taken to correct this situation.

As a result of this preliminary investigation of the analysis of eutectics in the ANP Laboratory, control limits for the determination of uranium, iron, nickel, and chromium have been established and are given in Table 20.

Analytical Laboratories (X-10). The precision of the uranium and thorium test results reported during this quarter continues to be excellent, the results reported by Laboratory 3550 being slightly more precise.

The accuracy of the uranium and thorium results in this period was satisfactory with two exceptions: a definite positive bias was noted for the thorium results at the higher concentration level (85 mg/ml), and a negative bias developed for the colorimetric uranium values reported by Laboratory 3019. In both instances, these trends were noted during the previous quarter. Experience has indicated that trends toward high or low values are usually of short duration and do not require remedial action; however, a trend that persists over a period of two or three months definitely indicates the need for corrective measures.

Control limits, based on the data accumulated during the past 12 months, have been established for the determination of uranium by both the colorimetric and fluorometric methods in Laboratories 3550 and 3019. Control limits for thorium results were determined from the data obtained during the past six months. The control limits for uranium and thorium are given in Table 21.

TABLE 21. ANALYTICAL LABORATORIES (X-10 Site) STATISTICAL EVALUATION OF THE URANIUM AND THORIUM CONTROL PROGRAMS

SAMPLE CODE NO.	LABORATORY NO.	DETERMINATION	METHOD	NUMBER OF DUPLICATES	CONCENTRATION (μg/ml)	CONTROL LIMITS (Limit of error, %)*		DETERMINATIONS OUTSIDE CONTROL LIMITS (%)	BIAS
						Found	Established		
F-1	3550	U	Fluorometric	10	3.0	10	10	10	None
E-1	3550	U	Fluorometric	54	2.5	9	11	4	None
E-1	3019	U	Fluorometric	140	2.5	12	15	3	None
D-2	3550	U	Colorimetric (thiocyanate)	63	506	2	2.2	0	None
D-2	3019	U	Colorimetric (thiocyanate)	149	506	2	3.0	4	Negative
Th-1	3550	Th	Colorimetric (thoron)	64	53	3	3.4	3	None
Th-3	3550	Th	Colorimetric (thoron)	64	85**	2	2.2	5	Positive

*95% probability level.

**In mg/ml.

SERVICE ANALYSES

H. P. House

ANALYTICAL SERVICES FOR THE ANP PROJECT

L. J. Brady J. R. Lund

During the quarter more than 1100 samples related to various phases of the ANP were analyzed. Approximately 80% of this work was carried out in conjunction with the experimental preparation of fused-salt fuels and coolants by the Reactor Chemistry group. Most of the remaining work was submitted by the Experimental Engineering group.

Materials analyzed consisted mainly of four types: multicomponent fluoride salt mixtures, high-nickel steels and alloys, relatively pure fluoride salts for use in the preparation of fused salt coolants and fuels, and miscellaneous synthetic compounds prepared in attempts to duplicate certain corrosion products.

Analysis of Fluoride Salt Fuels and Coolants. A large number of samples of fused fluoride salt mixtures that contained zirconium fluoride as a component were analyzed for major components and also for minor components, principally materials present as a result of corrosion of the container walls. The zirconium fluoride was added in the course of an intensive research study directed toward modifying the physical characteristics of the fluoride fuel mixture in accordance with the limitations set by the present design of the ARE.

Uranium was titrated potentiometrically with ferric sulfate, following chromous reduction. Fluoride was determined by the pyrohydrolytic method. Zirconium was determined gravimetrically by precipitation with phenylarsonic acid or mandelic acid, and the precipitates were ignited to the oxide for weighing. Results with the two precipitating agents were found to be in satisfactory agreement.

The major metallic impurities were determined by colorimetric methods. Tests by the Research and Development group indicated that the dimethylglyoxime method for the determination of nickel and the diphenylcarbazide method for chromium could be applied in the analysis of the zirconium fuels; however, the α, α-bipyridyl colorimetric method for iron, that was used during the previous quarter, could not be employed in the analysis of zirconium fuels because the zirconium precipitated when the solution was adjusted to a pH of 4. An alternate method in which hydroquinone is used to reduce the iron, acetate ion to complex uranium, and orthophenanthroline as the chromogenic agent proved to be satisfactory and is now being used for the analysis of all fluoride eutectics.

Traces of sulfide were determined by volatilizing hydrogen sulfide from an acid solution of the sample and collecting the sulfide in an ammoniacal zinc acetate solution. The amount of sulfide was determined by the methylene blue method. The determination of total sulfur requires a preliminary step in which the sulfate is reduced by hydriodic acid.

Uranium dioxide was determined by refluxing the sample with a solution of ammonium oxalate, separating the insoluble residue by filtration, and analyzing the residue for uranium. This is an adaptation of the method of Johnston and Young[1] for determining UO_2 in UF_4.

Analysis of Nickel Alloys and High-Nickel Steel. The study, which began during the previous quarter,[2] to

[1] P. Johnston and H. A. Young, *Method for the Analysis of Tetra*, CD-431 (June 6, 1944).

[2] L. J. Brady, J. R. Lund, and J. W. Robinson, "Analytical Services for the ANP Project," *Analytical Chemistry Division Quarterly Progress Report for Period Ending March 26, 1952*, ORNL-1276, p. 94.

determine by chemical analysis whether any of the major components of the nickel alloys are being removed preferentially during the corrosion process was continued during this period. A number of Inconel and stainless steel samples were analyzed. Because of limited sample quantity some modifications of the conventional ASTM methods were required.

Analysis of Fluoride Salts to be Used for Preparing Coolants and Fuels. Tests of purity were made on a number of fluoride salts that will be used for preparing coolants and fuels. These tests were performed in order to determine the purity of commercially available salts and to indicate the effectiveness of certain purification processes being employed by the Reactor Chemistry group. Compounds tested include the fluorides of zinc, cerium, columbium, zirconium, and the alkali metals. The methods used in the analysis of fuels and coolants were also applied in testing these salts.

Analysis of Miscellaneous Compounds. In order to more fully understand the corrosion process and to identify certain products of corrosion, attempts were made to prepare a number of fluoride salts that, it was thought, might be formed when fluorides react with the metals used to fabricate the test loops. These compounds differed widely in chemical composition, and analytical tests were made to supplement x-ray diffraction tests in identifying and determining the relative purity of the compounds.

ANALYSIS OF ORES AND RELATED MATERIALS

J. W. Robinson

Work on the recovery of uranium from low-grade ores has expanded greatly, resulting in a decided increase of samples from this source. Approximately 10,000 determinations were made during the period as compared with 3900 for the previous quarter. The major emphasis has been on Florida leached zone materials, but work is also continuing on carnotite, lignite, monazite, and Marysvale ores. The types of samples that were analyzed included head samples, together with solutions and residues produced from leaching operations in which sulfuric, nitric, phosphoric, or hydrofluoric acids were used as the leaching agent. In addition, a major type consisted of solutions and suspensions of organophosphorus complexes resulting from the exploratory use of phosphinic and phosphonic acids as selective precipitants.

The major constituents such as silicon, iron, aluminum, calcium, and phosphate, as well as uranium, were determined in the majority of samples. Several modifications of procedures for the determination of major constituents were tested in order to expedite the work and to improve the accuracy. Since the removal of the phosphate ion would greatly simplify the analysis of material containing phosphates, procedures were applied in which the phosphate was precipitated as $BiPO_4$ and separated by filtration. The subsequent removal of excess bismuth (as BiOCl), however, was not successful, and other complications developed to render this method unattractive. Ultimately, a procedure was used that required a separate portion of sample for each constituent determined.

ANALYSIS OF METALS AND ALLOYS

J. W. Robinson

A large number of stainless steel samples was classified as to type by qualitative tests. Many of the samples were analyzed for significant constituents by quantitative methods. In addition, the examination of amalgams and related materials contributed substantially to the number of flame photometric determinations for the alkali elements. It is

anticipated that the number of samples of this type will increase in the near future.

ANALYTICAL SERVICES FOR THE HRP

A. F. Roemer, Jr.

The major segment of work for the HRP continues to consist of the analysis of fuel solutions, uranyl sulfate, and fluoride for uranium and for corrosion products and additives. Currently, many of the uranyl sulfate solutions contain an amount of UO_3 well in excess of the stoichiometric requirement. On samples of this type, sulfate is also being determined in order to establish the uranyl-to-sulfate ratio. Initially, the sulfate was determined gravimetrically by precipitation as barium sulfate, but a more rapid method has recently been used in which the uranium is removed by passage of the solution through a cation-exchange column, and the sulfate as sulfuric acid in the eluate is determined by titration with standard sodium hydroxide solution.

The analysis of UO_3 slurries for major components, corrosion products, and nitrate has become increasingly important, and a further increase in samples of this type is anticipated. Test work on thorium oxide slurries is being initiated; therefore an increasing demand for the analyses of thorium oxide suspensions for thorium and corrosion products is expected.

TABLE 22. SUMMARY OF ANALYTICAL SERVICE WORK AT Y-12 SITE FOR PERIOD MARCH 10 THROUGH JUNE 7, 1952

	NO. OF PERSONNEL		ORNL DIVISIONS REQUESTING ANALYSES							Y-12	TOTAL DETERMINATIONS
	TECHNICAL	NONTECHNICAL	ANP	ELECTROMAGNETIC RESEARCH	ISOTOPE RESEARCH AND PRODUCTION	MATERIALS CHEMISTRY	REED	CHEMICAL SEPARATION OF ISOTOPES	OTHER DIVISIONS		
GROUP MAKING ANALYSES			Number of Determinations								
HRP	3	12					10,641				10,641
ANP	5	10	2107			6,832			43		8,982
Raw materials	5	7				10,038					10,038
Metal and alloys	1	2	71			855	283		5		1,214
Miscellaneous	1	1		74	72			50	192	50	438
TOTAL	15	32	2178	74	72	17,725	10,924	50	240	50	31,313

Gas analyses have decreased somewhat during this quarter. In cooperation with the Research and Development group, a control program has been established for the determination of O_2 and CO_2 in gases.

The HRP Analytical Chemistry Laboratory personnel currently number 16. Construction of a larger and more adequately equipped laboratory in Building 9204-1 is nearing completion, and the laboratory will soon be ready for occupancy.

During this quarter, 2419 samples were received and 2525 samples requiring 10,585 determinations were reported. At the end of the quarter the backlog consisted of 221 samples.