1380

X-426 (Revised 1-52)

[redacted]

OAK RIDGE NATIONAL LABORATORY
Operated By
CARBIDE AND CARBON CHEMICALS COMPANY

UCC

POST OFFICE BOX P
OAK RIDGE, TENNESSEE

ORNL
CENTRAL FILES NUMBER
52-8-103

DATE: August 16, 1952

COPY NO. 14-A

SUBJECT: Radiation Chemistry of Aqueous Reactor Solutions

"This document consists of 47 pages.
No. 14 of 15 copies, Series A"

TO:

FROM: J. W. Boyle, W. F. Kieffer, C. J. Hochanadel, T. J. Sworski, J. A. Ghormley

TID 2504 Del.

Distribution:

1. J. W. Boyle
2. J. A. Ghormley
3-7. C. J. Hochanadel
8-9. S. C. Lind
10. H. F. McDuffie
11. C. H. Secoy
12. J. A. Swartout
13. T. J. Sworski
14. E. H. Taylor
15. A. M. Weinberg

CLASSIFICATION CANCELLED
DATE 2-19-60
For The Atomic Energy Commission
H. F. Canell
Chief, Declassification Branch

[redacted]

[redacted]

J. W. Boyle, J. A. Ghormley, C. J. Hochanadel, W. F. Kieffer, and T. J. Sworski.

"The Radiation Chemistry of Aqueous Reactor Solutions. Part 1. Radiation-induced Decomposition."

Reactor Sci. Technol., 3, No. 1, 32 (1953).

TID - 2008, march (1953)

[redacted]

"Radiation Chemistry of Aqueous Reactor Solutions"

By

J. W. Boyle, W. F. Kieffer, C. J. Hochanadel,
T. J. Sworski and J. A. Ghormley

Date Issued

Paper to be submitted for publication in the Journal of Reactor Science and Technology.

[redacted]

OAK RIDGE NATIONAL LABORATORY
Operated By
CARBIDE AND CARBON CHEMICALS DIVISION
Union Carbide and Carbon Corporation
Post Office Box P
Oak Ridge, Tennessee

[redacted]

[redacted]

DISTRIBUTION LIST

1. J. W. Boyle
2. J. A. Ghormley
3-7. C. J. Hochanadel
8-9. S. C. Lind
10. H. F. McDuffie
11. C. H. Secoy
12. J. A. Swartout
13. T. J. Sworski
14. E. H. Taylor
15. A. M. Weinberg

[redacted]

[redacted]

[redacted]

RADIATION CHEMISTRY OF AQUEOUS REACTOR SOLUTIONS[1]

J. W. Boyle, W. F. Kieffer[2], C. J. Hochanadel,

T. J. Sworski and J. A. Ghormley

Oak Ridge National Laboratory

Abstract

The decomposition of pile irradiated aqueous uranium solutions has been studied as a function of uranium concentration, isotopic enrichment, temperature, anion accompanying the uranium, oxidation state of uranium, pH and added solutes. Except for the nitrate, no net change of the solute itself was observed and the net effect was that of water decomposition to H_2, O_2 and peroxide. The initial yield of hydrogen decreased on lowering the ratio of fission recoil energy to total energy and decreased on increasing the uranium concentration or the hydrogen ion concentration. The yield was independent of temperature, anion, oxidation state of uranium and the presence of some added solutes. From results reported here, the yield of hydrogen in the decomposition of water by fission recoil particles was calculated to be 1.8 H_2 per 100 ev.

---

(1) This study was carried out at the Oak Ridge National Laboratory as part of the chemistry program for the Homogeneous Reactor Project under the general supervision of C. H. Secoy as Project Chemist and H. F. McDuffie as leader of the Project Radiation Chemistry Group.

(2) Research Participant at Oak Ridge National Laboratory, Chemistry Division, on leave from the College of Wooster, Wooster, Ohio, 1951-1952.

[redacted]

[redacted]

Introduction

The Manhattan Project was in its infancy when the development of an aqueous homogeneous type reactor was first considered. Much thought and no little effort has gone into this subject during the past seven or eight years. The advantages of such a reactor have often been pointed out. One of the better known references on this subject is the "Homogeneous Reactor Experiment Feasibility Report".(1) Questions concerning the radiation stability of the solute and the extent of decomposition of the solvent have always been numerous and the need for accurate, well understood answers has been great.

The effects of fission fragments on water is of prime importance in the design of any aqueous homogeneous reactor. The physicist is concerned with the copious amount of gas arising from the extensive decomposition of the water present, since numerous bubbles are formed and the safe, smooth operation of the reactor is endangered. The engineer needs reliable values for gas evolution so as to design off gas and recombiner systems which are safe at all times with respect to the hydrogen-oxygen explosive region.

To the radiation chemist the recoil particles of the fission process become another radiation entity to be studied and compared with γ rays, β^- particles, α particles, protons, deuterons, etc. The rate of energy loss in the fission track is over an order of magnitude greater than that for any other known radiation. The homogeneous reactor solution is a medium for studying the effects of fission fragments on water.

[redacted]

With the re-emphasis on homogeneous reactors at Oak Ridge National Laboratory, a detailed, systematic study of the radiation chemistry of uranium solutions has emerged, with the general clarification of the "gas problem" being the goal. This goal was twofold in nature: (1) to provide reliable values of gas yields necessary for the reactor design group and (2) to obtain a better understanding of the radiation chemistry of the fission process in water and to compare effects of fission radiation with those of other types of radiation.

The classified literature dating back to about 1944 contains gas yields covering a wide range of values. In comparing the results of the present investigation with earlier published values, the agreement is sometimes quite good, although fortuitous in several cases, and sometimes quite poor. Often the conditions for which the previously reported values were obtained are not known, so that comparison of similar solutions and conditions are difficult if not impossible. Perhaps the first study was that of Anderson and Fermi[2] in which it was found that an aqueous uranyl nitrate solution irradiated in the Chicago Graphite reactor gave a linear pressure increase up to 14 atmospheres in a pyrex ampoule. An accurate determination of the gas yield was impossible but a value of one molecule of water decomposed to its elements was indicated for each 100 ev of energy absorbed in the solution.

In early work at the Metallurgical Laboratory, Chicago[3], it was found that 0.2 M $UO_2(NO_3)_2$ irradiated in CP-3 heavy water moderated reactor gave a yield of $\sim$ 2.7 molecules of hydrogen per 100 ev. The addition of 0.3 M $Fe(NO_3)_3$ lowered this value to $\sim$1.2.

In another report[4] values were given for 0.2 M $UO_2(NO_3)_2$ solutions ranging from 0.7 to 3.6 (initial yield value 3.8) under varying conditions. The yield for UO_2SO_4 was somewhat less than for $UO_2(NO_3)_2$. Ce^{IV} increased the hydrogen yield markedly. Work performed at the Clinton Laboratories, Oak Ridge[5], gave gas yields of 2.08 for 0.0167 M $Pu(SO_4)_2$ in 1.0 N H_2SO_4 and 2.05 for enriched uranyl carbonate solutions irradiated in the graphite pile. UO_2SO_4 in 1.0 or 2.0 N H_2SO_4 irradiated in the graphite pile gave values of 1.7, 1.8, $\sim$2 under various conditions.

This report concerns initial yields of gas production for aqueous solutions of UO_2SO_4, UO_2F_2, $UO_2(NO_3)_2$ and $U(SO_4)_2$ determined as a function of uranium concentration, isotopic enrichment, temperature and hydrogen ion concentration. Effects of the oxidation state of the uranium, of different anions, and of added solutes also have been considered in this study. Uranium concentration has been varied from 0-800 g/liter. The U^{235} to U^{238} ratio has been varied from 1/2950 to $\frac{13.2}{1}$ which gives a fission intensity factor of about 2700 for constant concentration and neutron flux. Varying the enrichment essentially varied the type of radiation, since the total radiation incident on a sample in the pile is composed mostly of fission fragments, fast neutrons, α and γ rays, and β^- particles.

[redacted]

Experimental

Materials:

Uranyl sulfate - natural, depleted, enriched.

The solution of natural UO_2SO_4 was prepared by Lietzke and Griess[6]. Mallinckrodt $UO_2(NO_3)_2$ was decomposed to UO_3 by heating to 200°C, repeatedly washed, and dissolved in the stoichiometric amount of B & A. CP. H_2SO_4. The U/SO_4 ratio was reported to be 0.984 ±.002. Depleted UO_2SO_4 was prepared from depleted uranium metal (0.031% U^{235}) by dissolving in concentrated HNO_3, adding excess H_2SO_4 and evaporating to fumes of SO_3. The product was purified by four precipitations as the acetone complex. Finally the acetone was removed by repeated evaporations with water over a period of two days. The U/SO_4 ratio was found to be 0.988 ±.008. UO_2SO_4 enriched to 93.2% U-235 was made from the metal by the same method.

Uranyl fluoride - enriched, natural.

A solution of UO_2F_2 enriched 93.19% in U-235 was obtained from the Chemicals Division of the Oak Ridge Y-12 plant. The UO_2F_2 solutions containing natural uranium were made by dissolving the solid salt (obtained from Y-12) in water. Both natural and enriched UO_2F_2 solid salts were prepared by fluorination of UO_4 in the presence of oxygen.

Uranyl nitrate - enriched, natural.

The 93.2% enriched $UO_2(NO_3)_2$ solution was prepared from the correspondingly enriched UO_2SO_4. A sample of the UO_2SO_4 was evaporated to dryness, roasted at 800°C to U_3O_8 and the oxide

[redacted]

dissolved in HNO_3. Solutions of natural $UO_2(NO_3)_2$ were made by dissolving the CP Mallinckrodt solid salt in water.

Uranous sulfate.

Solutions of U(IV) in the form of $U(SO_4)_2$ were prepared from UO_2SO_4 solutions of corresponding enrichment. The calculated amount of concentrated H_2SO_4 was added to the UO_2SO_4 solution and the mixture treated with zinc amalgam. Air was bubbled through the decanted solution to insure the oxidation of any U(III) formed during the reduction to U(IV). The resulting solutions showed no precipitation of U(IV) as hydroxide at low uranium concentrations even after irradiations. The high concentrations of $U(SO_4)_2$ were quite subject to hydrolytic precipitation. The U(IV) was found to oxidize very slowly when open to the air; evacuated samples were stable. No attempt was made to remove the zinc sulfate resulting from the reduction reaction. The U(IV)/U(VI) ratio was at least 4.0 in all samples before irradiation. The U(IV) analyses were made by members of the Analytical Chemistry Division staff using an automatic microtitrator[7] with ceric sulfate as the reagent. Total uranium was measured for the same solutions by first reducing all the uranium to U(IV) with chromous sulfate followed by titration with ceric sulfate.

Solutions of different concentrations and enrichments were made up gravimetrically by mixing solutions of known concentration and density. Densities were measured for each solution with a precision of 0.1% or better. The uranium concentration in the samples was calculated from detailed plots of density vs. concentration. These curves were obtained by choosing samples over the

appropriate concentration range and determining the uranium content gravimetrically. This was done by taking a solution sample of known volume, evaporating, and roasting the uranyl salt in air to U_3O_8 at 800°C for 2 hours. The pH of solutions was measured before irradiating by means of a Beckman pH meter.

Preparation of Samples:

The majority of irradiations were made on 0.5 ml samples of solution in fused silica ampoules drawn from 4-5 mm i.d. silica tubing. The liquid occupied about half the ampoule volume. Some irradiations were made with 1.0 ml and 2.0 ml samples of the depleted uranium solutions in ampoules allowing a similar liquid/gas volume ratio. The irradiations of the 200 g U/l, 93.2% enriched UO_2SO_4 were made in special ampoules which kept the solution in a cylindrical layer no more than 1 mm thick. This eliminated any shadowing effect in these highly fissioning samples. After being placed in the ampoules, all samples were carefully degassed on the vacuum line before sealing. Each ampoule was provided with a tip which could easily be broken off in the vacuum line for gas analysis.

Some measurements were made using a special type ampoule which permitted measuring total pressure in the ampoule without opening it, thereby allowing a number of effects to be studied on the same sample. Since for enriched solutions the product gases H_2 and O_2 were found to be present in 2/1 ratio, the hydrogen yield could be calculated from measurement of total pressure. These ampoules shown in Figure 1, A, were constructed of 1 or 2 mm i.d. thick-wall silica capillary tubing and contained about 0.1 ml

of solution. The ampoule design and method of determining pressure in the ampoule by measuring the boiling temperature of the solution have been described previously.[8]

For gamma-irradiations a similar type ampoule (Fig. 1, B) was used, modified to include a platinum filament for combusting gases. This allowed the composition of the hydrogen-oxygen gas, and by difference the peroxide present in solution, to be determined at any time during the irradiation sequence.

Irradiation of Samples:

Samples were irradiated in the vertical hole 12 of the X-10 graphite pile. The hole temperature was maintained at 30° by circulating cooling water. Sample temperatures of 120°C and above were maintained during irradiation by a controlled electric furnace. A Mn monitor was included with most irradiations. In this way any absorption of neutrons by the furnace was automatically accounted for in calculating energy input. Gamma irradiations were made using a Co^{60} source[9] at an intensity of about 4000 r per minute.

Analyses:

After irradiation the samples were allowed to stand for a period of about one day to allow decay of induced radioactivity and permit safe handling of samples during analyses.

Ampoules were broken open in a vacuum system and evolved gases were analyzed using the Saunders-Taylor[10] semi-micro technique in which H_2 and O_2 were burned on a platinum filament.

Peroxide in solution was determined both from the stoichiometric excess of H_2 and also by direct analysis using a spectro-

photometric method to detect I_3^- formed by the oxidation of I^- by peroxide. This procedure was a modification of one reported previously[11]. The reagent consisted of a mixture of equal volumes of (1) a solution containing 2 g NaOH, 66 g KI, 0.2 g $(NH_4)_6MoO_{24} \cdot 4H_2O$ in 1 liter of distilled water and (2) 20 g $KHC_8H_4O_4$ in 1 liter of distilled water. One ml of sample was mixed with 2.5 ml of reagent, diluted to 5 ml, and the optical density measured at 3750°A using as reference the transmission with no cell in the optical path. The blank was prepared using unirradiated solution and was measured in the same way as the sample. The molar extinction coefficient (ε) at 3750°A and 25°C was 17,500. The absorption followed Beer's law over the forty fold range of concentration studied from 10^{-4} to 4×10^{-3} M.

Radiation Dosimetry:

Pile Radiation.

The energy absorbed in uranium solutions irradiated in the pile is contributed by fission recoil particles, β particles, fast neutrons and gamma-rays.

As a rough measure of relative dose, the product of pile power and irradiation time may be used. However, for any given power and position in the pile, the total neutron flux, the neutron energy spectrum and the gamma-ray to neutron ratio may vary from time to time. This could result from variation in pile loading - both fuel and experimental facilities, and variation in control rod position as a result of change in pile loading, air temperature, etc. It was found, for example, that for a given pile power and position in hole 12, the thermal flux as determined by manganese monitors, varied as much as 5% from day to day or the

majority of the energy absorbed in most samples was from fission recoils and for each irradiation a manganese monitor ($\sim$25 mg of 0.7% Mn, Al-Mn-Co alloy) was included in order to measure relative dose. The Mn^{56} activity was measured in a 4π ionization chamber after allowing short lived activities, such as 2.4 min. Al^{28}, to decay for about two hours. In a more thorough and time consuming study, the neutron energy spectrum could have been checked for each irradiation using suitable monitors. It was assumed that the changes in neutron spectrum and the ratio of neutron to gamma-ray flux were small ($<$1%), second-order effects, and that the activity as measured with the manganese monitors was a relative measure of total dose.

The absolute measure of energy absorption in solution was based on adiabatic calorimetric measurements of rate of energy absorption in pure water and in uranyl sulfate solutions containing natural uranium at two concentrations.

The fission energy absorbed in solution, as calculated from activity induced in a manganese monitor irradiated with the calorimeter, was 5% lower than that obtained by the calorimetric measurement. The values for constants used in this calculation were σ_f for U^{235} = 546 barns, σ_c for Mn^{55} = 13 barns, $T_{\frac{1}{2}}$ for Mn^{56} = 2.59 hr with the decay scheme proposed by Mitchell[12] and energy absorbed in solution per fission = 165 Mev. Making this 5% correction to align the monitor measurements with the calorimetric data, the energy absorbed in a sample was calculated from monitor activity using the equation:

$$\text{total ev/ml} = \text{specific monitor activity} \times \left[(g\ U^{235}/l) \times 3.446 + 0.5804\right] \times 10^{15}.$$

The calorimeter shown in Figure 2 consisted of a cylindrical aluminum jacket in which was placed the water or solution contained in a silvered, thin-walled silica bulb insulated by a vacuum. The charcoal getter was baked out, the system evacuated and sealed off immediately prior to irradiation. Copper-constantan thermocouples were placed in both the sample and in the aluminum jacket and temperatures were followed with a potentiometer during irradiation. Typical time-temperature curves for sample and jacket during irradiation are shown in Figure 3. The rate of energy absorption in the sample was calculated from the heat capacity of the sample plus silica bulb and the rate of temperature rise of the sample when the temperatures of sample and jacket were identical. This required 68 minutes irradiation time for 44.6 g U/l solution and 30 minutes for the 297 g U/l solution. The calorimetric data are summarized in Table I. It was assumed that energy absorption in the silica bulb was negligible compared with absorption in solution. However, some gamma and neutron energy was expended in the silica and for measurements on pure water this correction could amount to a few percent. The result obtained for pure water is in good agreement with that obtained by Ghormley[5], 0.020 cal, ml^{-1}, MW^{-1}, min^{-1}, using a similar method and that of Richardson[13], 0.0209 cal, ml^{-1}, MW^{-1}, min^{-1}, using an isothermal method. The work of Richardson also indicated that about 34% of the pile energy absorbed in H_2O is by gamma-rays and 66% by neutron scattering. In estimating the ratio of fission energy to total energy absorbed in pile irradiated solutions, it was assumed that gamma absorption and neutron scattering was the same for solutions as

[redacted]

Table I

Calorimeter Results for Rate of Energy

Absorption in Water and Uranyl Sulfate Solutions*

Irradiated in Hole 12 of Graphite Pile

		Solutions Natural UO_2SO_4	
	Water	44.6 g U/l	297 g U/l
U^{235}, g, l^{-1}	0.0	0.321	2.14
Pile Power, MW	3.85	3.70	3.55
Temperature, °C	38°	37°	33°
Temperature rise, °C, min^{-1}	0.076 ±.0015	0.201 ±.002	0.888 ±.009
Weight solution, g.	2.04	1.90	2.49
Weight silica, g.	0.25	0.44	0.41
Solution C_p, cal, g^{-1}, deg^{-1}	1.00	0.95	0.73
Heat capacity, cal, deg^{-1}	2.09	1.89	1.90
Energy absorbed, cal, min^{-1}	0.159	0.380	1.69
cal, ml^{-1}, min^{-1}	0.078	0.212	0.943
cal, ml^{-1}, MW min^{-1}	0.0202	0.0572	0.265

*This table does not include results obtained for 40 g U/l 93% enriched solution. For this experiment, the calorimeter was lowered into the pile for a period of one minute during which time the potentiometer readings were recorded verbally with a tape recorder. From these readings, by extrapolation, the temperature increase over a definite period of time could be calculated. Unfortunately, although a good rate value was obtained in the second run, it was later observed that the uranium had deposited as peroxide precipitate. The rate was 25% lower than that predicted from the results listed above and the low value could be attributed in part to self-shielding by the precipitate. The experiment was not repeated.

[redacted]

for pure water. This assumption is obviously not strictly valid, but for this estimate a detailed and laborious calculation was not warranted.

Gamma Radiation.

Yields reported for gamma-rays were based on a yield for ferrous sulfate oxidation of 15.5 Fe^{++}[14] per 100 ev which had been calibrated both by calorimeter and by ion chamber measurements.

[redacted]

Results

Products of Irradiation

The products found were mainly those resulting from the decomposition of water: H_2 and O_2 gases and peroxide. In all cases where the temperature of the sample was maintained at 100°C or above during irradiation, the H_2/O_2 ratio was nearly 2/1, indicating that nearly all of the peroxide assumed to be intermediate to O_2 production had been thermally decomposed. In one series of samples, (natural UO_2SO_4, 44 g U/l) direct measurement of peroxide gave a yield within 10% of the gas analysis yield for H_2. This was found to be true only if the samples were frozen immediately after irradiation and analyzed quickly upon thawing. One hour's waiting between the thawing and analyzing further lowered the yield by 15%, indicating the significance of the room temperature decomposition of the peroxide.

In nearly all ampoules analyzed, a small amount of gas was found which could be condensed by liquid nitrogen, but not by solid carbon dioxide. This was shown to be CO_2, probably resulting from the oxidation of traces of organic impurities in the solutions. The condensable gas was collected from several ampoules to provide an amount sufficient for the measurement of its vapor pressure as a function of temperature. The range of vapor pressures covered was from 0.002 mm Hg at -168.5°C to 0.100 mm Hg at -135.5°C. A thermistor gauge[15] was used to measure the pressures; the temperature of the sample in a slowly warming aluminum block was measured by thermocouples. Comparison curves over the same range with known samples of CO_2 showed exact agreement.

[redacted]

In none of the investigations of uranyl sulfate or fluoride solutions was any evidence found for the decomposition of the solute species. It has been reported that concentrated H_2SO_4 containing dissolved UO_3 decomposed under pile radiation to SO_2 and O_2, whereas there was no net decomposition of 98.6% H_2SO_4 by pile irradiation.(16) As a preliminary to this investigation, it was found that during irradiation with Co^{60} gamma-rays, SO_2 could be swept out of solution of 18 M H_2SO_4 and 11 M H_2SO_4, but none could be detected from 0.4 M H_2SO_4 or 297 g U/l UO_2SO_4 solutions. On analyzing solutions after irradiation, during which there was no sweeping, no SO_2 could be detected. These results would indicate that back reaction (oxidation of SO_2) is very rapid and therefore the steady state concentration of reduction products of the anion is very low.

The gases found in irradiated ampoules containing uranium in the IV oxidation state were all deficient in O_2. After the ampoules had been opened and the gases analyzed in the usual manner, samples of the remaining solution were removed and analyzed. By comparing the resulting U(IV)/U(VI) ratio with the corresponding value for the solution before irradiation, the amount of U(IV) oxidation to U(VI) could be calculated. The values thus found for 10 samples accounted for the difference between the observed amount of O_2 gas and that expected from the stoichiometric ratio of $\frac{1}{2}$ the H_2 gas produced. The fact that some O_2 gas was found, even in the presence of sufficient U(IV) to completely remove it, can probably be explained by the decomposition of the peroxide intermediate into O_2 gas and its diffusion into the gas phase before it had opportunity to react with

the solute U(IV). This was tested by irradiating ampoules filled with solution to leave a negligible amount of free gas space. The gases from these contained only 2.2% of the stoichiometric amount of O_2 gas, whereas in ampoules where the gas volume/liquid volume ratio was about unity, the O_2 gas was 17.2% of the stoichiometric amount. The solutions with little gas space showed a correspondingly larger amount of U(IV) oxidation.

It was concluded from the stoichiometry found for H_2, O_2 and peroxide on irradiating uranyl solutions in the pile that U(VI) was the stable valence state under radiation and that at the steady state the concentrations of other valence states were very small. These studies with U(IV) solutions confirmed this conclusion. It was also shown that U(VI) was the stable form in irradiating solutions with gamma rays. By spectrophotometric analysis, it was shown that 10^{-3} M and 10^{-2} M U(IV) in 0.1 M H_2SO_4 irradiated with cobalt γ-rays were oxidized completely to U(VI).

Two sets of ampoules containing concentrated $UO_2(NO_3)_2$ solutions were found to give other than the typical electrolytic ratio of hydrogen to oxygen. Natural $UO_2(NO_3)_2$ (318 g U/l) and 8.8% enriched $UO_2(NO_3)_2$, (420 g U/l) were found to give relatively large amounts of non-condensable gas which was inert to combustion with either added excess O_2 or H_2. Its identity as N_2 was established by spectroscopic examination. Another anomalous result in these cases was the presence of H_2 and O_2 in nearly equal amounts. Irradiated 93% enriched $UO_2(NO_3)_2$ solutions, 42.3 and 4.2 g U/l, yielded only H_2 and O_2 in stoichiometric amounts. These results confirm the report by Mills[17] that the gases evolved during

operation of the Los Alamos HYPO consisted of 12% H_2, 24% O_2 and 64% N_2. The reactor fuel solution contained uranyl nitrate at a concentration of about 450 g U/l, 14.5% enrichment. The report also lists stoichiometric amounts of H_2 and O_2 as the only gases evolved from solutions of 2 g U/l, 50% enriched and 0.33 g U/l, 100% enriched.

These data suggest that nitrate ion was decomposed by pile irradiation when present in concentrations of 318 g U/l or greater. Such decomposition of nitrate ion was not unexpected since it was known that during irradiation with X-rays or gamma-rays, both oxidized and reduced forms exist at equilibrium.[18] It was surprising to note, however, that nitrate was reduced all the way to N_2. A more thorough study of nitrate radiation stability would be desirable.

Factors Which Determine H_2 Gas Yield

The extent of net decomposition of water by radiation is most reliably indicated by the amount of H_2 gas produced, since the oxidant from water decomposition is usually divided among a variety of products. The yield of gas per energy input is expressed in terms of the "G" value, defined as the number of molecules of H_2 gas produced by the absorption of 100 ev of energy. It was found that G_{H_2} depended on a number of variables: type of radiation, concentration of uranium, and pH of the solution. Although the presence of different anions accompanying the cationic uranium also appeared to alter the yield, the changes were in all probability due to differences in solution pH. Changes in temperature and the presence of added solutes were found to have no effect on the

initial rates of H_2 production. Temperature and added solutes did exert an influence on secondary processes such as back reactions which in turn had the effect of altering the apparent H_2 yield.

The data which are pertinent to demonstrating the effect of variables on G_{H_2} are summarized in Table II. These figures represent the average of from three to six determinations for each point. The results of individual experiments agreed within 2% or better. In cases where H_2 gas yield was not linear with doses employed (as discussed in the following section), the tabulated value is either for an extrapolated initial yield or for G_{H_2} obtained from samples containing added Br^- ion.

Effect of Type of Radiation

In Figure 4, the yield of H_2 expressed as cc H_2/ml sample solution is shown as a function of energy input per ml sample solution for various types of radiation. It is immediately evident that the hydrogen yield is less for lower ratios of fission energy to total energy. Fission Energy as used in this paper only includes the energy from the fissioning taking place in the sample solution. Probably 95% of this energy comes from fission fragment recoils and the rest from radioactive fission products, prompt neutrons, etc. Time of exposure for any one solution is proportional to distance on the horizontal axis. Since the amount of fission energy liberated in a solution depends on its U-235 content, comparisons between yields for different solutions can be expressed reasonably only in terms of the energy input rather than time of exposure(*). The

(*) As an approximate conversion in terms of pile power and time, it could be stated that irradiating 1 ml of solution containing

[redacted]

Table II

Initial Rates of H_2 Gas Production

from Pile Irradiated Uranium Solutions

	Concentration g U/l	Enrichment g U235/l	Fission Energy / Total Energy	pH	G_{H_2}
UO_2SO_4	.399	.372	.688		1.61
	4.03	3.76	.957	3.26	1.66
	18.6	1.63	.906	2.90	1.48
	38.1	.274	.619		.95
	40.7	37.9	.995	2.42	1.53
	102.1	37.4	.995	2.00	1.35
	105.2	38.9	.995	0.10*	1.20
	108.4	40.1	.995		1.35
	202.3	.063	.273		.69
	202.5	37.6	.995	1.61	1.11
	203.4	189.6	.999		1.11
	227.0	1.63	.906		.98
	310.4	.096	.364		.62
	386.0	1.63	.906		.80
	431.3	37.8	.995	1.32	.77
	436.8	3.10	.949		.73
	477.2	.148	.467		.56
	713.5	33.5	.995		.56
	796.0	37.4	.995	1.03	.49
UO_2F_2	4.25	3.96	.959	4.25	1.63
	40.1	37.3	.995	3.32	1.58
	118.8	37.1	.995	2.98	1.36
	272.0	37.2	.995	2.64	1.11
	377.0	39.3	.996	1.35*	.84
	405.7	42.3	.996	2.41	.95
$UO_2(NO_3)_2$	4.24	3.95	.960		1.63
	42.3	39.4	.995	2.05	1.5
	318.0	2.29	.932	1.03	.6
	420.1	36.9	.994	.60	.55
$U(SO_4)_2$	42.2	39.3	.995	1.95	1.45
	92.5	35.1	.996	.1	1.25
	350.0	32.0	.995	.1	.75

*pH adjusted by adding acid.

[redacted]

data chosen for Figure 4 are those for solutions in which the total amount of uranyl sulfate is constant at approximately 200 g U/l.

For the enriched solutions, the same linear H_2 gas production with energy input was found for both the 93.2% and 18.6% enrichments. The former contained 189.6 g U^{235}/l for which the energy contributed by fission within the sample was 99.9% of the total energy input during pile irradiation. The latter contained 37.6 g U^{235}/l with fission contributing 99.5% of the energy. The fact that the data for the two solutions fit the same line implies that although the amount of energy absorbed by the 93.2% enriched solution is about five times that for the 18.69 enrichment, the yield per unit energy input is independent of the intensity of this energy.

When the enrichment is lowered so that the ratio of fission energy/total energy is appreciably less, the behavior is different. The data for solutions containing natural uranium (1.63 g U^{235}/l with fission contributing 90.6% of the energy input), and for depleted uranium (0.063 g U^{235}/l with fission contributing only 27.3%) fit on curves which indicate a levelling off of H_2 production with increased dose. This suggests that a radiation-induced back reaction occurred in these solutions. This view is also supported by the fact that the levelling off was more pronounced for a series of ampoules in which the relative amount of gas phase space had been decreased. It has been shown[11] that bromide ion and some other ions effectively inhibit radiation-induced reactions

---

1 mg U^{235} for 1 minute at a pile power of 1 megawatt the energy absorbed in solution would be 3.5×10^{18} ev.

involving H and OH free radicals. That this appears to be the situation in this system is shown by the effect of the addition of 0.02 M in Br^- to the natural and depleted uranium solutions. The dotted line of the figure shows that the yield in the presence of Br^- does not fall off, but maintains the initial rate of gas production up to the highest dose given. In the presence of Br^- the levelling off will occur at much higher doses than attained in these exposures.

When pure uranyl sulfate solutions at a concentration of 200 g U/l were irradiated with γ rays from Co^{60}, the yield of H_2 gas was so low that it could not readily be shown on the same scale as the other data of the figure. When the solution contained 0.02 M Br^-, however, a linear rate of H_2 production with dose was maintained, as shown in Figure 4. When Br^- was added to solutions in which fission contributed 99% or more of the total energy, little effect was observed. This is to be expected, since in these solutions, the linear H_2 yield with energy implies that the radical back reaction during irradiation is not appreciable at these doses.

Effect of Uranium Concentration:

Figure 5 shows graphically the dependence of G_{H_2} on uranium concentration for solutions of UO_2SO_4 in which the ratio of fission energy to total energy is constant at .995 and .906. A curve of results for pure gamma-radiation is included for comparison. It can be seen from the figure that the presence of increased amounts of uranium in solution lowers the G_{H_2} for all types of radiations here reported. The decrease in yield by the solute is

greater at lower solute concentrations and also at lower fission energy/total energy ratios.

Effect of the anion:

Figure 6 shows the comparison of G_{H_2} obtained from solutions of UO_2F_2, $UO_2(NO_3)_2$ and $U(SO_4)_2$ with the data for UO_2SO_4. Except for the points at 4 g U/l, 93.2% enrichment, the data are all for solutions containing about 38 g U^{235}/l. In these fission contributes 99.5% of the energy. The very low G_{H_2} for $UO_2(NO_3)_2$ at 420 g U/l may reflect the fact that there was evidence for nitrate decomposition which may have produced oxidizing intermediates. These could have reacted with H radicals or dissolved H_2 gas. The data indicate that G_{H_2} decreased as the uranium content was increased for solutions of all the uranium compounds investigated. That this concentration effect is due to more than a change in the solution pH is shown by a comparison of the G_{H_2} for UO_2SO_4 solutions of low uranium concentrations with those for the UO_2F_2 solutions of higher uranium concentration but similar pH.

Effect of pH:

The acidity of the solution was found to have an effect on G_{H_2} when uranium concentration and type of energy absorbed were not variables. This is indicated by the two points marked with arrows on Figure 6. When H_2SO_4 was added to a UO_2SO_4 solution (105 g U/l), to adjust the pH to a value equal to that for the comparable solution of $U(SO_4)_2$, the G_{H_2} value was found to agree exactly with that for the lower curve. Similarly, aqueous HF was added to a UO_2F_2 solution (377 g U/l) to lower the pH to a value

equal to that for a UO_2SO_4 solution of comparable uranium content. Again the G_{H_2} was found to agree with that for the lower curve. This implies that the difference between the G_{H_2} for the various solutions at the same uranium concentration is due to a pH effect and is dependent neigher on the species of anion present nor the oxidation state of the uranium. It further implies that alterations in the chemical species of uranium by the different complexing tendencies of the anions is not important.

Effect of Added Solutes:

To determine whether the change in G_{H_2} with increasing UO_2SO_4 concentration is related to mass of solute material, two solutions were made consisting of mixtures of UO_2SO_4 and Cs_2SO_4. Cs_2SO_4 was chosen because (1) cesium is an alkali metal and would be expected to behave as a chemically inert material; (2) its neutron capture cross section is low enough not to alter the fissioning characteristics of the solution appreciably; (3) the ratio of Cs to SO_4 in Cs_2SO_4 is 265.8/96 and the ratio of UO_2 to SO_4 in UO_2SO_4 is 267.0/96, so that in relation to SO_4 the cation mass is very nearly equal. The results of irradiating these solutions compared with those for pure UO_2SO_4 (calculated from the data of Table II) are presented in Table III.

It can be seen from the values for the observed G_{H_2} and those predicted from the data of Table II and Figure 5 that the addition of cesium as a solute cation does not have the same depressing effect on G_{H_2} as the addition of an equivalent mass of uranium. This experiment has a second implication. The addition of such large amounts of sulfate ion would be expected to have considerable

[redacted]

Table III

Concentration of Uranium (g U/l) 93.2% enriched I	Concentration of Cs_2SO_4 (g Cs_2SO_4/l) II	Concentration of Uranium Equivalent to Cs_2SO_4 g U/l III	G_{H_2} Observed for Solution of Composition Column I + II	G_{H_2} Calculated for Solution of Composition Column I + III
4.03	0	0	1.66	1.66
6.74	155.3	102.2	1.63	1.32
6.23	324.2	213.3	1.64	1.06

[redacted]

effect on the degree of complexing of the UO_2^{++} ion at these concentrations. That the G_{H_2} is not thereby lowered lends further support to the conclusion that the G_{H_2} is virtually independent of changes in the chemical species of the uranium present in solution.

The interest in Cu^{++} ion as a possible pressure depressor in homogeneous reactors by virtue of its ability to catalyze the recombination of H_2 and O_2 gases prompted examination of solutions of UO_2SO_4 with added Cu^{++} to determine whether the copper would depress the rate of gas formation. It was found that in ampoules containing 93.2% enriched UO_2SO_4 at a concentration of 40 g U/l the G_{H_2} was not depressed, but was actually increased slightly by the addition of Cu^{++} ion. When no Cu^{++} was present G_{H_2} = 1.53. With 0.05 M $CuSO_4$ added it was 1.61; with 0.03 M $CuSO_4$, G_{H_2} was 1.56. The presence of chromate pre-treated 347 stainless steel both in the liquid and gas phase was found to have no effect on G_{H_2}. These results with added Cu^{++} support those with added Br^- and generally confirm the conclusion of Allen et al.[11] that although the steady state concentrations of H_2 and O_2 from water decomposition by irradiation are increased by the presence of most solutes, the initial rate of H_2 formation is not appreciably altered.

The Effect of Temperature:

The effect of temperature on determining the relative and total amounts of radiation decomposition products was found to be the net result of several processes. It was found that the forward reaction (the decomposition of water by irradiation with an initial

rate measured as G_{H_2}) was independent of temperature effects. Early in the course of the investigation it became apparent that an increase in temperature over the range from 30°C to 250°C had the following qualitative effects:

1. The thermal recombination of products H_2 and O_2 was increased.
2. The rate of peroxide decomposition was increased.
3. The rates of chemical reactions leading to precipitation of uranium in the case of U IV solutions were increased. Any removal of uranium from solution resulted in a decrease in the effectiveness of the fission process on water decomposition and consequent lowering of G_{H_2}.
4. The rate of the radiation-induced back reaction (presumably through reaction with radicals) was increased.

The experimental technique used in the ampoule studies was designed to minimize the first three of these so that a more true measure of hydrogen yields could be made. Most of the irradiations were carried out at 120°C, a temperature which was too low to allow appreciable thermal recombination, but high enough to insure the decomposition of nearly all the peroxide, and therefore to keep any uranyl peroxide from precipitating at the acidity of these solutions. In the studies with $U(SO_4)_2$, however, it was necessary to carry out irradiations at 30°C to keep from causing hydrolysis and consequent precipitation of insoluble basic uranous compounds.

The thermal recombination of the product H_2 and O_2 gases in the ampoules after irradiation was shown to occur to a negligible extent. This was to be expected, in spite of any catalytic effect of the solutes in the aqueous phase because of the low gas pressures in the ampoules and because the ampoules were cooled to room temperature soon after irradiation. The presence of Cu^{++} in solution has been demonstrated to show great catalytic activity for the thermal $H_2 + O_2$ recombination.[19] Ampoules containing 0.03 M Cu^{++} along with 93.2% enriched UO_2SO_4, 40 g U/l, showed no lowering of the initial H_2 yield even when irradiated at 210°C. Maintaining the ampoules at this temperature for 30 minutes after irradiation resulted in sufficient recombination to lower the net yields by 5%.

The independence of the forward reaction and the dependence of the irradiation-induced back reaction on temperature is most clearly demonstrated by Figures 7 and 8. These show the data for two sets of pressure-reading ampoules. Figure 7 shows that in highly enriched uranyl sulfate, the rate of pressure increase is the same at 150°C and 250°C. It also demonstrates that the presence of bromide ion has only a small positive effect, where the fission energy/total energy ratio is .995. The rate of gas production is seen to be large compared with the rate of thermal recombination. This conclusion was also confirmed by the identical H_2 yields measured by direct analysis for ampoules filled with 93% enriched UO_2SO_4 at a concentration of 40 g U/l irradiated at 30°, 120°, 190° and 210° C. Figure 8 shows the contrasting behavior of irradiated ampoules containing natural uranyl sulfate

(fission energy/total energy = .925). In the Br^--containing ampoules where the radical back reaction is minimized, the rate of decomposition again is seen to be temperature independent. The slope of the line for 30°C agrees with that for 150° and 250° when the precaution of decomposing peroxides to produce gaseous O_2 was observed. The variation with temperature of the slopes of the lines for the bromide-free ampoules indicates that the radiation-induced back reaction does have a positive dependence on temperature.

Comparison with yields obtained from operating reactors:

The Los Alamos "Supo" water boiler reactor[20] uses 88.7% enriched $UO_2(NO_3)_2$ at a concentration of 77.2 g U/l. The published data on the operating characteristics of this reactor make possible a calculation of G_{H_2} by two methods. The value of 0.55 moles H_2O decomposed/KWH (G_{H_2} = 1.47) can be calculated from the hydrogen-oxygen recombination in the catalytic beds.[21] A similar calculation based on the volume of make-up water necessary to keep the reactor operating at constant volume of solution yields 0.49 moles H_2O decomposed/KWH which translates to G_{H_2} = 1.31. The agreement is very good between these values based on actual operating data of a homogeneous reactor and the value indicated from an inspection of the ampoule data (for comparable concentrations and enrichments) presented in Figure 5.

The Los Alamos HYPO used 14.5% enriched $UO_2(NO_3)_2$ at a concentration of 450 g U/l. Katcalf and Goldstein[22] report gas evolution data for the operation of this reactor which makes possible the estimate of G_{H_2} = 0.5 - 0.8. The agreement is again seen to be good with the ampoule data plotted on Figure 5.

[redacted]

Discussion

In the decomposition of water by ionizing radiations two reactions are considered to occur simultaneously:

(F) $2H_2O \longrightarrow H_2 + H_2O_2$ (or $H_2 + \frac{1}{2}O_2 + H_2O$)

(R) $H_2O \longrightarrow H + OH$

The molecular products (F) are presumed to be formed following the primary process by recombination of free radicals in regions of high radical concentrations (hot spots). The remaining radicals (R) are assumed to be responsible for most of the reactions with solutes in irradiated solutions. Adding a reactive solute such as Br^- or Cu^{++} essentially prevents radiation induced recombination of H_2 and H_2O_2 (through reactions with H and OH) and allows the yield in (F) to be measured. It is known that both the absolute and relative yields for reactions (F) and (R) depend upon the type of radiation (ionization density along the particle track). Reaction (F) is favored by high ion density (α fission-recoil) and reaction (R) by low ion density (fast electrons). Since the radiation induced back reaction of products produced in (F) occurs through reactions with radicals produced in (R), the steady state concentrations during irradiation also depend upon type of radiation, with densely ionizing radiations producing higher steady states.

The effects of the variables on H_2 yield here reported are consistent with this interpretation of the processes occurring. Varying the type of radiation (by altering the U-235 content of the solutions) changed the yield as expected. When type of

radiation was not a variable, i.e., in solutions where fissions contributed more than 99% of the total energy, the yield was independent of intensity. This is consistent with the interpretation, since it would be expected that the regions in which reaction (F) occurs would not appreciably overlap until extremely high intensities were involved. Such overlapping of "hot spots" might be expected to alter the yield of products from (F). When neither uranium concentration nor type of radiation was a variable, the small differences apparently accompanying changes in anion were traced to differences in solution pH. Such a difference in yield G_{H_2} for reaction (F) has been reported previously.[23] Using gamma rays, an 18% decrease in yield was found on going from pH 7 to pH 0.4. The mechanism of this effect is not understood.

By far the most striking effect on yield was that of decrease in yield with increased uranium concentration. This could not be explained by change in pH nor by energy absorption by the mass of solute present. From Table II it can be seen, for example, that on varying pH in $\sim$100 g U/l solution (40 g U^{235}/l) from pH 2.0 to pH 0.1 the yield varied only from 1.35 to 1.20 whereas for 800 g U/l solution (40 g U^{235}/l) at an intermediate pH = 1.03, the yield dropped to 0.49. Also, the fact that adding large amounts of cesium sulfate to the solution had no effect on the yield, indicates that the drop in yield cannot be explained by energy absorption in the mass of solute present. Also, the nature of the chemical complex containing the fissioning uranium atom in solution does not seem to be important.

The mechanism by which uranium lowers the yield (F) is not understood, but it may act to dissipate energy and prevent water decomposition, or it may sensitize the recombination of water decomposition products and prevent their being measured.

In studies using gamma-rays it was found that although uranium had a large effect on yield in reaction (F), little effect was observed in yield for reaction (R). This conclusion was based on the fact that yields for H_2O_2 in water and uranyl sulfate solutions both containing dissolved H_2 and O_2 during irradiation[14] were approximately the same. This would indicate that the action of uranium occurs only in the regions of high ion density (hot spots).

The addition of cupric or bromide ion increased the yield from enriched solutions a few percent. This probably can be accounted for by the action of fission activity in solution during the 24 hours or more which elapsed between the time of irradiation and analysis. The β^- activity from fission products would be absorbed in solution and produce both an increase in the amount of H_2 through reaction (F) and a decrease through back reaction brought about by radicals produced in reaction (R).

With Cu^{++} or Br^- present the back reaction would be prevented so that a net increase in yield would be observed. Values for the other solutions may be a few percent low because the post irradiation back reaction induced by fission product activity would predominate over the forward reaction.

The fact that varying the temperature had no effect on yield might be explained either by a negligible activation energy for

the reactions involved (recombinations of free radicals) or by the probability that temperatures in regions where reaction (F) occurs are already extremely high.

The data obtained for the decomposition of water in fissioning uranium solutions reported in this investigation can be used to estimate a G_{H_2} for reaction (F) for fission recoil particles. This value, 1.8, is compared to values reported for other types of radiation in Table IV. The same value resulted from two methods of estimation, both of which were designed to eliminate the effect of the variables listed above. Extrapolating the upper curve in Figure 5 to zero uranium concentration gives a value of about 1.8 H_2 per 100 ev. This extrapolation was made following a curve similar to that shown for gamma-rays. In another calculation, using the value obtained for 0.4 g U/l (93% U^{235}) of G = 1.61 (See Table II), and assuming additivity of yields for gamma-rays, protons and fission recoils, a yield G_{H_2} = 1.8 was obtained. At this concentration it was assumed that the effect of solute in lowering the yield was negligible as indicated for gamma-rays.

From the values listed in Table IV it can be seen that the yield for water decomposition in reaction (F) varies from 0.46 H_2 per 100 ev for the least densely ionizing radiation to 1.8 to 2.0 for the most densely ionizing radiations. Furthermore, on increasing the ionization density beyond that obtained with alpha particles, no further increase in yield is observed.

[redacted]

Table IV

Radiation	Initial Energy (Mev.)	Mean Range (cm air)	G_{H_2}
Gamma-rays[14] or fast electrons	1	300	0.46
Pile recoil-protons[a]	-	-	1.5
Radon alpha particles[24][25]	6.8	5.6	2.0, 1.8
Fission recoil particles	97. 65.	2.5 1.9	1.8

(a) The yield for recoil protons was calculated assuming additivity of gamma-ray and proton yields. Values used were the hydrogen yield for pure water irradiated in the pile $G_{H_2} = 1.15$, the gamma-ray yield given above $G_{H_2} = 0.46$, and the ratio (2.0) of neutron scattering to gamma-ray energy absorbed in H_2O irradiated in the pile as determined by Richardson[13].

[redacted]

ACKNOWLEDGEMENTS:

The authors wish to acknowledge their indebtedness to the following:

T. H. Handley who gave valuable help in the preliminary stages of this investigation.

A. C. Stewart who measured peroxide formation by direct solution analysis.

Paul F. Thomason and members of the Analytical Chemistry Group who measured pH and uranium concentrations.

[redacted]

REFERENCES

(1) "Homogeneous Reactor Experiment Feasibility Report". ORNL 730-B, August 15, 1950.

(2) H. L. Anderson and E. Fermi, "Dissociation Pressure of Water Due to Fission". CP 1729 Nuclear Physics Division Report for month ending May 25, 1944.

(3) CC-2738 Chemistry Research-Radiation Chemistry, February 15, 1945. A. J. Miller, C. J. Hochanadel, S. Gordon, M. G. Bowman.

(4) CC-2800 Report for the Chemistry Division. Period Ending March 15, 1945. C. J. Hochanadel, A. J. Miller, R. Livingston, M. G. Bowman.

(5) Mon N-311 Report for the Chemistry Division for Months March, April, May, 1947. A. O. Allen, J. W. Boyle, E. Shapiro. See also TID-272, pp 9-21, J. W. Boyle.

(6) M. H. Lietzke and J. C. Griess, "Preparation of Pure UO_2SO_4 for Experimental Purposes". HRP Quarterly Report, ORNL 1121, August 15, 1951.

(7) F. J. Miller, "Micro Automatic Titrations". Analytical Chemistry Division Quarterly Report, ORNL 955, January 10, 1951.

(8) J. A. Ghormley and A. O. Allen, "Decomposition of Tritium Oxide Under Its Own Radiation". ORNL 128, Sept., 1948.

(9) J. A. Ghormley and C. J. Hochanadel, Rev. Sci. Inst. 22, 473 (1951).

(10) K. W. Saunders and H. A. Taylor, "The Photolysis of Acetone in Presence of Mercury". J. Chem. Phys., 9, 616 (1941).

(11) A. O. Allen, T. W. Davis, C. J. Hochanadel, J. A. Ghormley, "Decomposition of Water and Aqueous Solutions Under Mixed Fast Neutron and Gamma Radiation", J. Phys. Chem., 56, 575 (1952) Based on ORNL 130, Oct. 1949.

(12) A. C. G. Mitchell, Rev. Moc. Phys. 22, 42, (1950).

(13) D. M. Richardson, "Calorimetric Measurement of Radiation Energy Dissipated by Various Materials Placed in the Oak Ridge Pile". ORNL-129 (Dec. 1948)

(14) C. J. Hochanadel, "Effects of Gamma-Rays on Water and Aqueous Solutions". J. Phys. Chem. 56, 587 (1952).

[redacted]

REFERENCES (continued)

(15) Saul Dushman, "Scientific Foundations of Vacuum Techniques". John Wiley & Sons, Inc., New York, 1949, p. 329.

(16) J. W. Boyle and A. O. Allen, ORNL 155, September 1948.

(17) M. M. Mills, "A Study of Reactor Hazards", NAA-SR 31, December 7, 1949. See also "An Enriched Homogeneous Nuclear Reactor", Rev. Sci. Inst. 22, 489, (1951).

(18) e.g. M. Lefort, "Action of Ionizing Radiations on Water and Aqueous Solutions", J. Chimie Physique 47, 776, (1950). A. O. Allen, C. J. Hochanadel, T. W. Davis, "Fixation of Nitrogen by Pile Radiation and Acid Formation in the Argonne Pile", Mon C-390 (October 1947).

(19) H. F. McDuffie, et al., Chemistry Division Quarterly Progress Report for Period Ending March 31, 1952.

(20) L. D. P. King, "The Los Alamos Homogeneous Reactor, Supo Model". L.A. 1301, February 1952.

(21) M. E. Bunker, et al., "Gas Recombination System of the Los Alamos Homogeneous Reactor." LA 1337, Dec. 1951.

(22) Katcalf and Goldstein, "Sweeping of Radioactive Gases from the Homogeneous Pile". LA 548, April 11, 1946.

(23) A. O. Allen and E. Johnson, "The Molecular Yield in the Decomposition of Water by Hard X Rays". J.A.C.S., (1952) in press.

(24) F. C. Lanning and S. C. Lind, "Chemical Action of Alpha Particles from Radon on Aqueous Solutions", J. Phys. Chem. 42, 1229 (1938).

(25) M. Lefort, "Decomposition of Water by Alpha Rays", J. Chimie Physique 48, 339 (1951).

UNCLASSIFIED
DWG. 15968

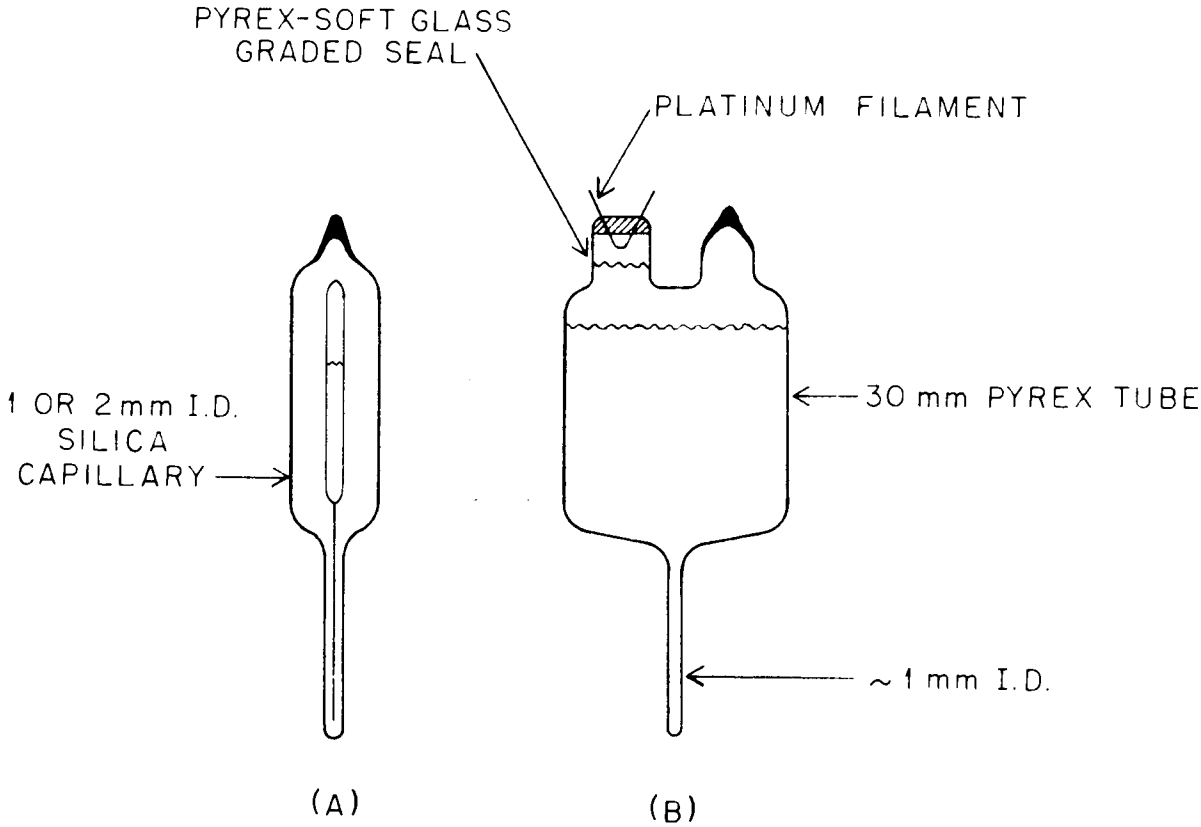

FIGURE 1
PRESSURE READING AMPOULES USED FOR
(A) PILE IRRADIATIONS, (B) GAMMA IRRADIATIONS

UNCLASSIFIED
DWG. 15969

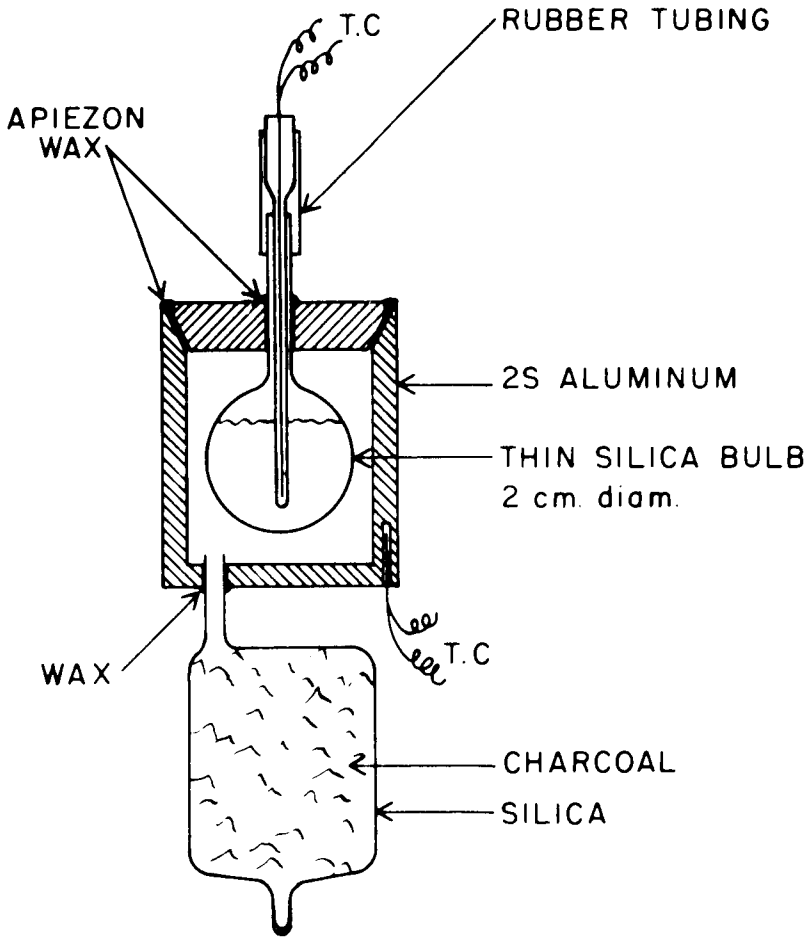

FIGURE 2

CALORIMETER FOR MEASURING PILE RADIATION ABSORBED IN WATER AND URANIUM SOLUTIONS

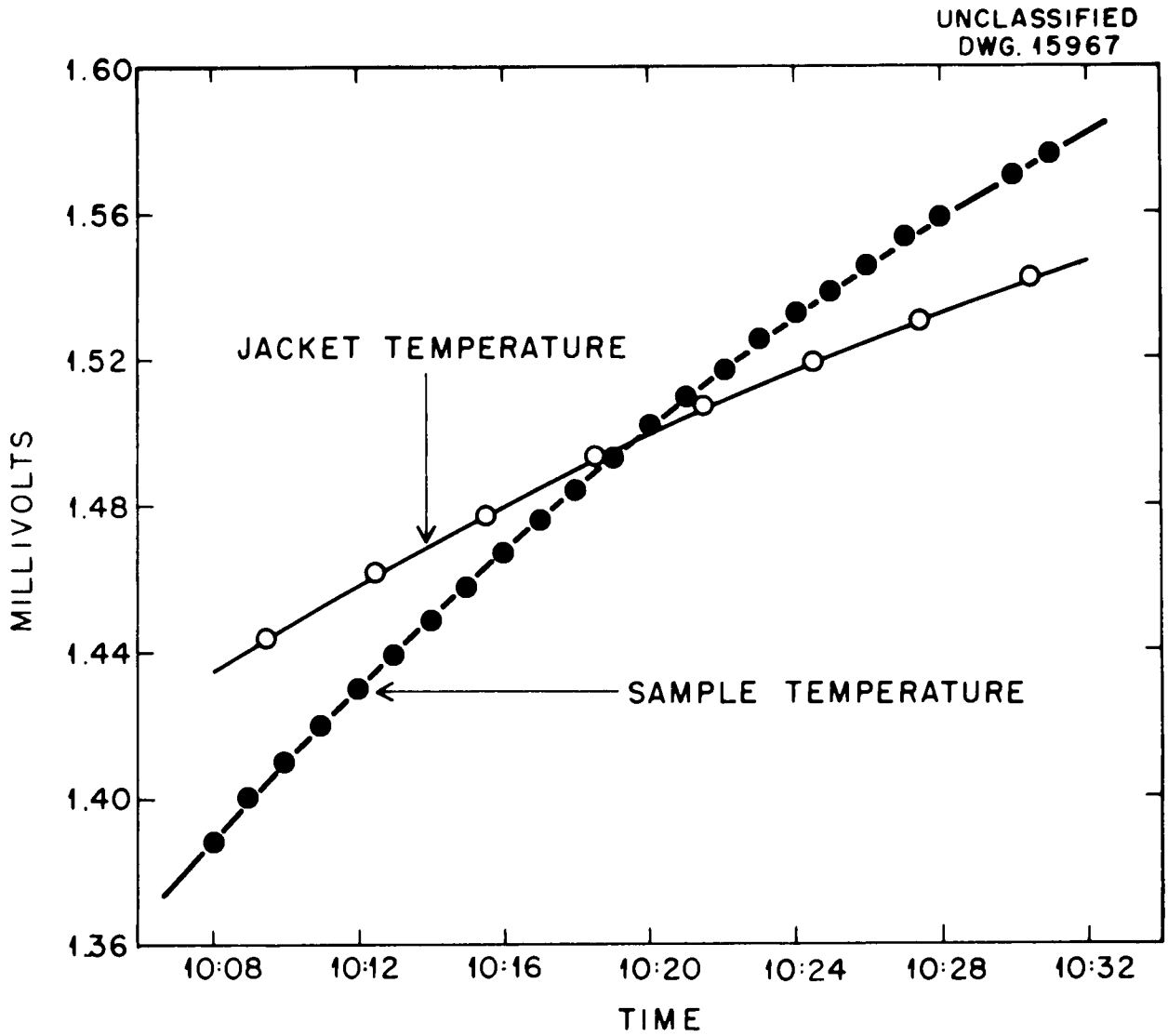

FIGURE 3 - TYPICAL TIME-TEMPERATURE CURVES OF CALORIMETRIC MEASUREMENTS IN THE PILE

[redacted]

DWG. 15965

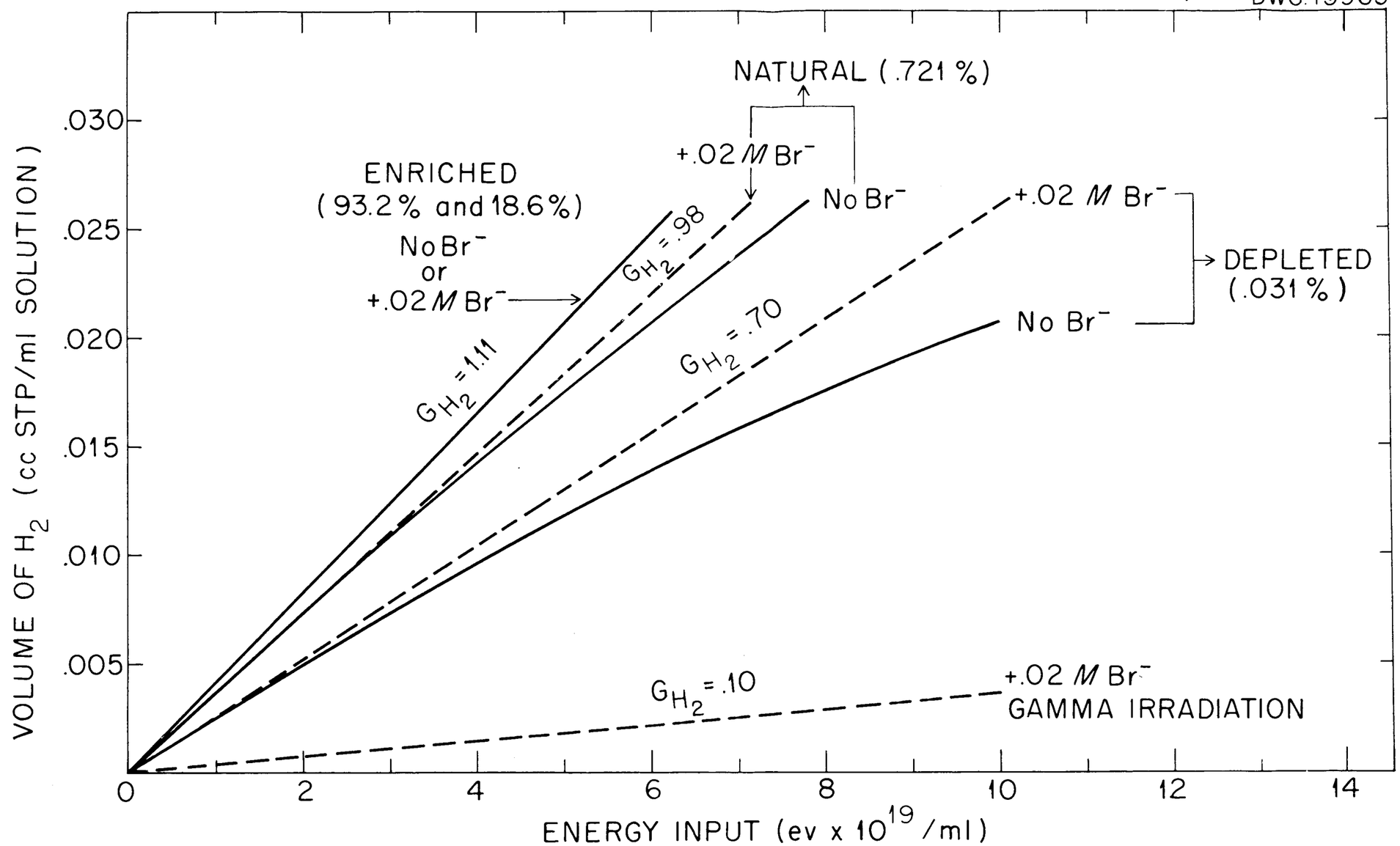

FIGURE 4 – EFFECT OF TYPE OF RADIATION ON HYDROGEN GAS YIELD FROM IRRADIATED UO_2SO_4 SOLUTIONS (CONCENTRATION ≈ 200 g U/l)

[redacted]

DWG. 15966

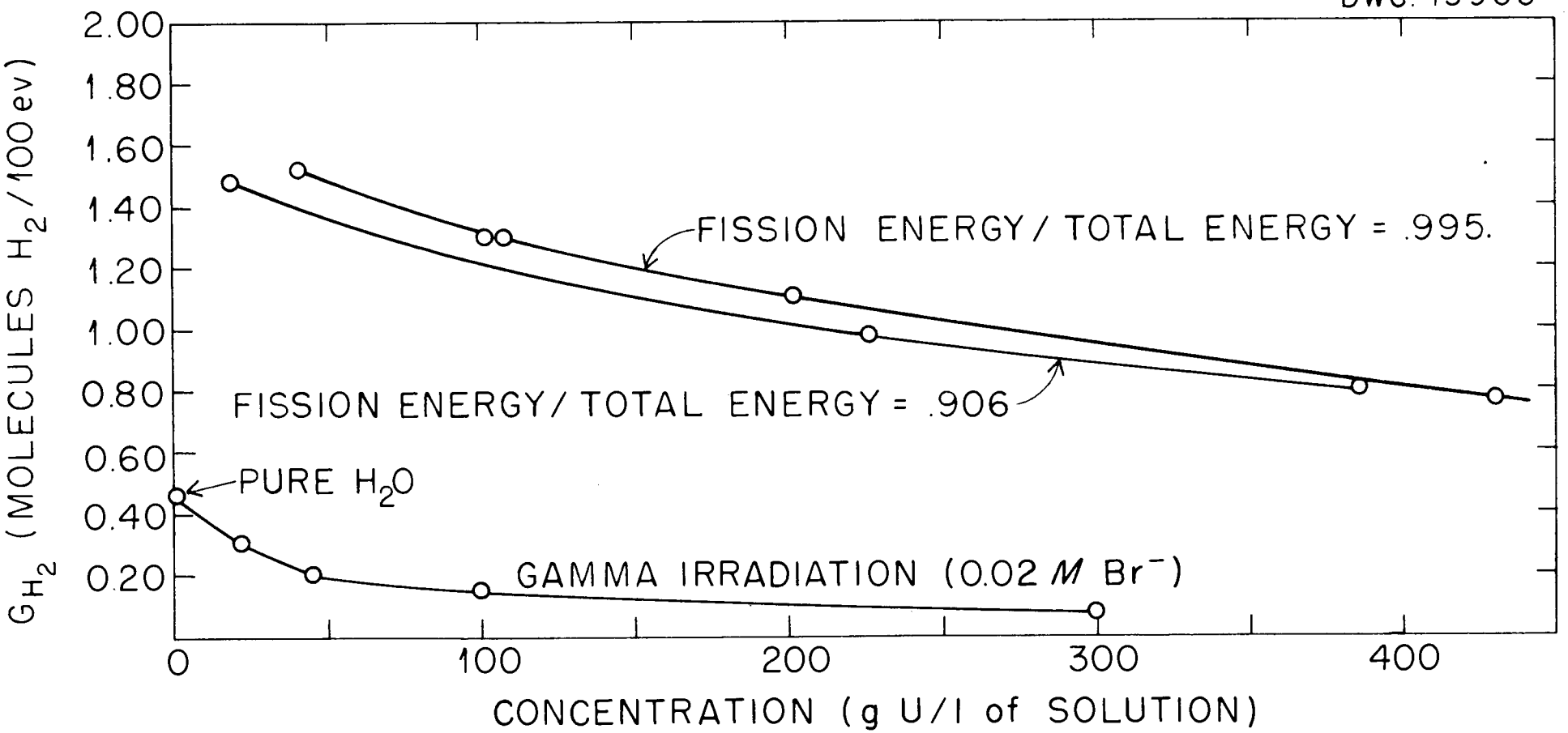

FIGURE 5 - EFFECT OF URANIUM CONCENTRATION ON HYDROGEN GAS YIELDS FROM IRRADIATED UO_2SO_4 SOLUTIONS

[redacted]

DWG. 15964

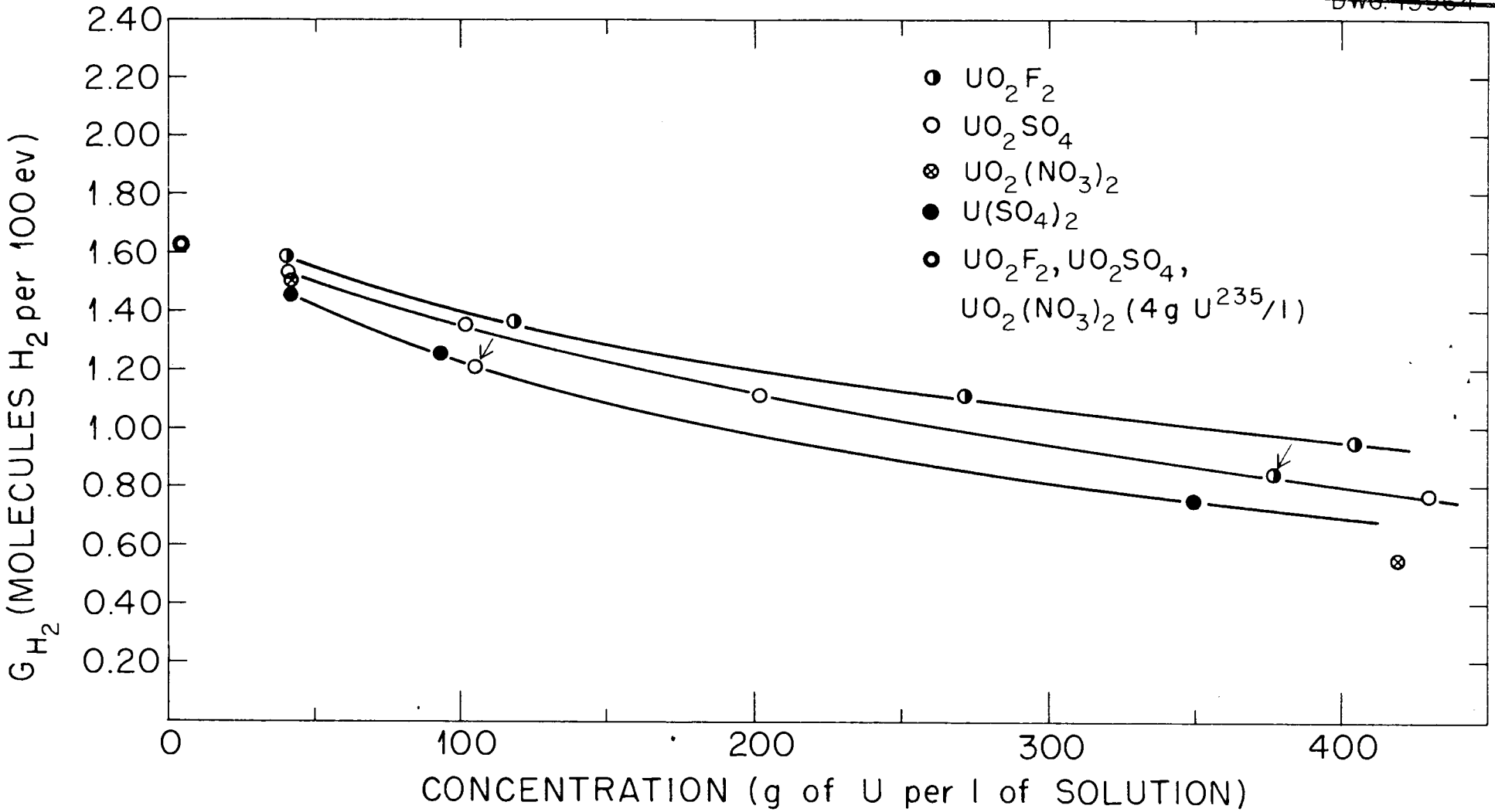

FIGURE 6 — HYDROGEN GAS YIELDS FOR URANIUM SOLUTIONS CONTAINING 38 GRAMS OF U^{235} PER LITER

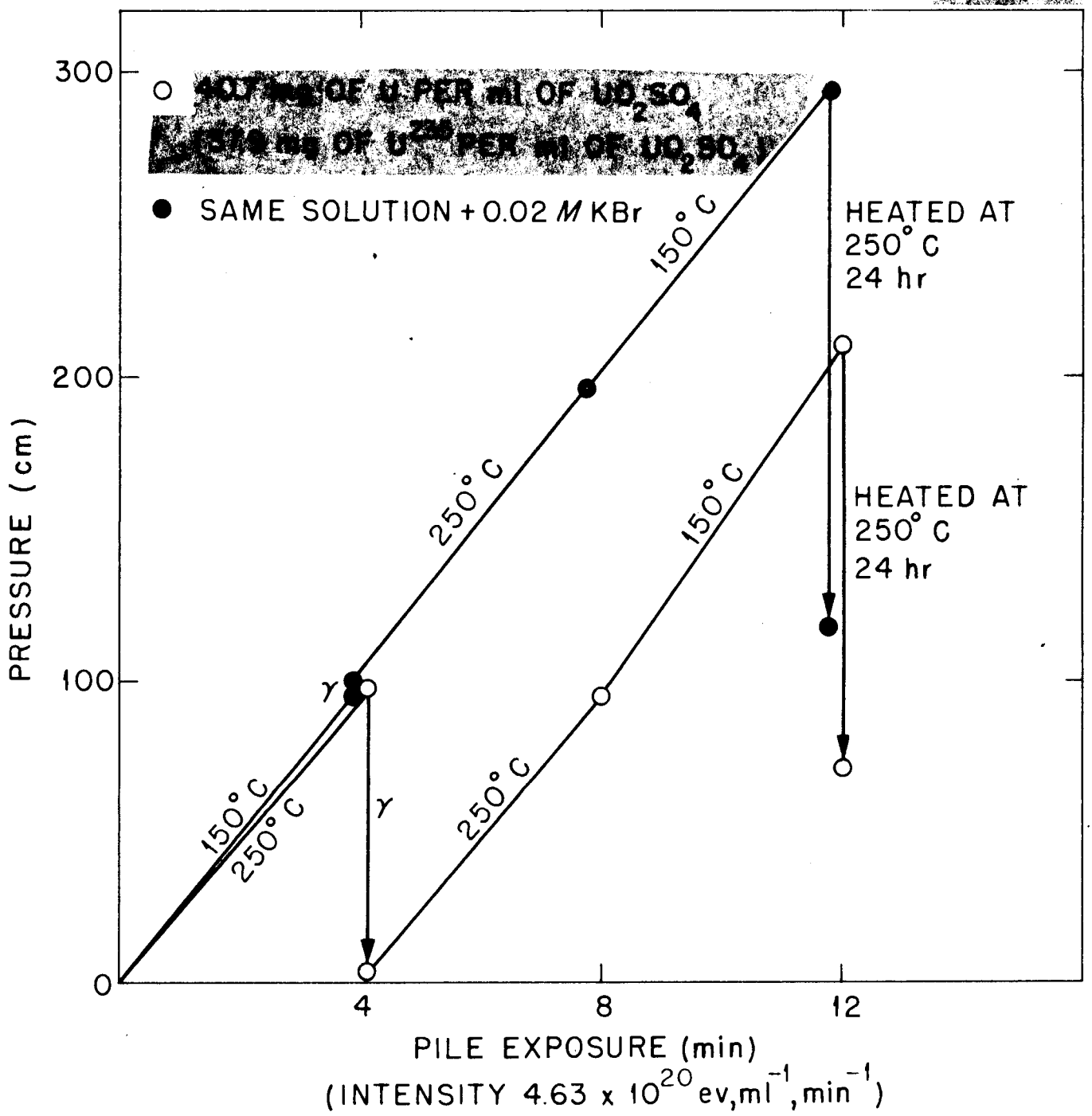

FIGURE 7 - PRESSURE CHANGES IN CAPILLARY AMPOULES CONTAINING UO_2SO_4

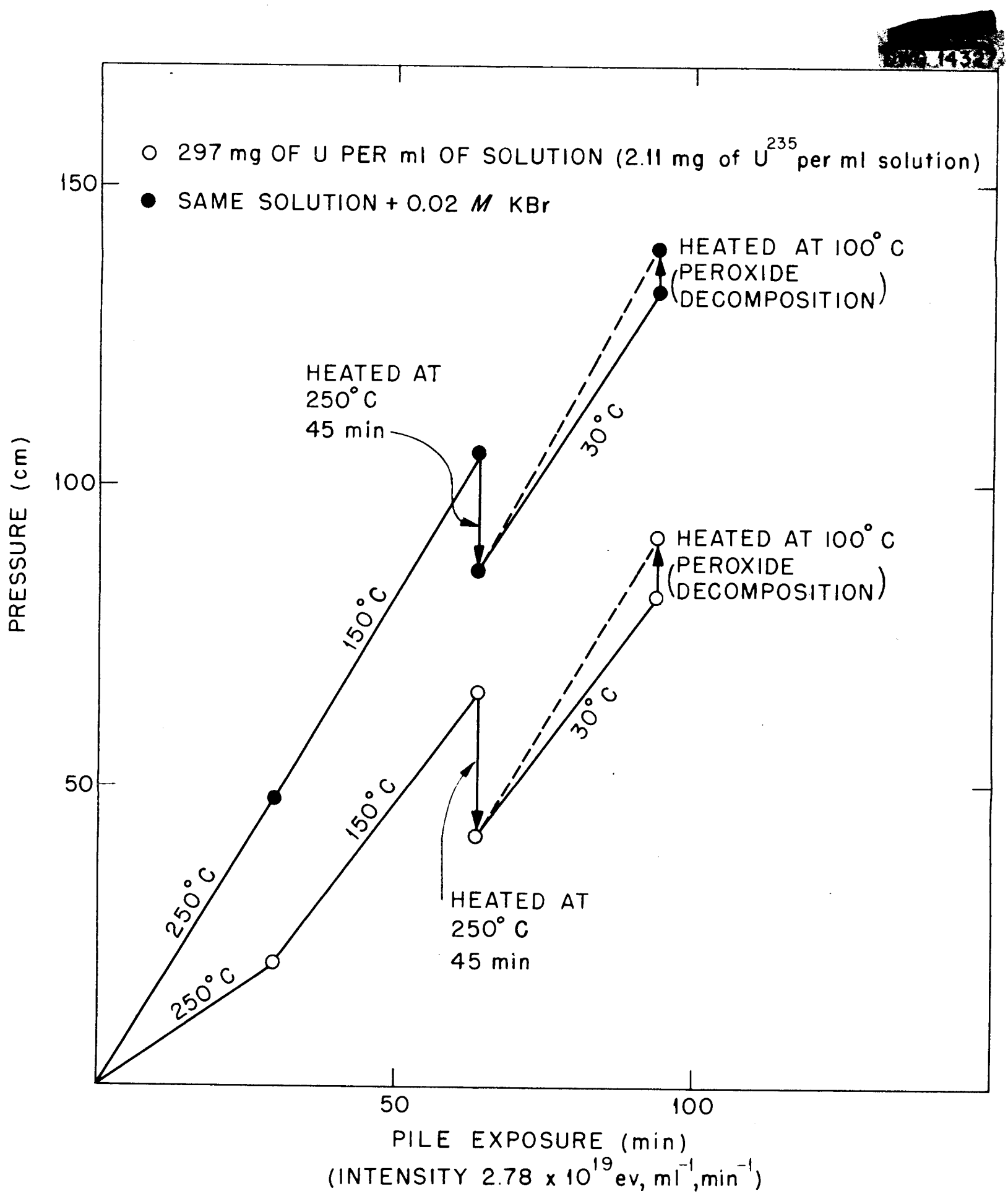

FIGURE 8 - PRESSURE CHANGES IN CAPILLARY AMPOULES CONTAINING UO_2SO_4 SOLUTIONS