[redacted]

ORNL
MASTER COPY

[redacted]

ORNL 963 – VOL I
Reactors – Research
and Power
Series B

AEC RESEARCH AND DEVELOPMENT REPORT

THIS DOCUMENT WAS PROPERLY DECLASSIFIED
AND IS EXEMPT FROM DOE 1979 REVIEW ORDER
PER DOE LETTER, 10-15-79, E.T. DUNF.
P. S. BAILER, ORNL/CO
INITIALS DATE

LABORATORY RECORDS
1984

MATERIALS TESTING REACTOR

PROJECT HANDBOOK

J. H. Buck
C. F. Leyse

[redacted]

OAK RIDGE NATIONAL LABORATORY
U.S. ATOMIC ENERGY COMMISSION

CLASSIFIED

By Authority Of:
AEC 10-362
M Shirley
For: H. T. Bray, Supervisor
Laboratory Records Dept.
ORNL

OAK RIDGE NATIONAL LABORATORY
OPERATED BY
CARBIDE AND CARBON CHEMICALS COMPANY
A DIVISION OF UNION CARBIDE AND CARBON CORPORATION
UCC
POST OFFICE BOX P
OAK RIDGE, TENNESSEE

CLASSIFICATION CANCELLED
DATE JUL 5 1979 (DOE Review Order)
R. F. Baker
DECLASSIFICATION OFFICER
OAK RIDGE NATIONAL LABORATORY
AUTHORITY DELEGATED BY ERDA 8-15-77

CONFIDENTIAL UNDOCUMENTED

[redacted]

ORNL DOCUMENT CLEARANCE FORM

This form must be completed by each division submitting to Laboratory Records either (1) reproducibles for reproduction and distribution or (2) three copies of the document if a paper, journal, article, oral presentation, etc. Failure to supply requested information will result in delays. FOR HELP IN COMPLETING THIS FORM, CONTACT LABORATORY RECORDS, (4-6753).

1. PERSON PREPARING FORM	PHONE NO.	DATE SUBMITTED	RETURN REPRODUCIBLES TO: Name and Address
BETTY FAY CLACK	574-6755	2-12-93	

2. DIVISION AND CODE	3. PROGRAM

4. ACCOUNT OR WORK ORDER NO.	5. REPORT NOS.	6. CLASSIFICATION
	ORNL 963 - VOL. 1	UNCL

7. TITLE

MATERIALS TESTING REACTOR PROJECT HANDBOOK

8. AUTHOR(S) (LIST ALL AUTHORS AND DIVISION CODES; IF NOT AN ORNL EMPLOYEE, INDICATE INSTITUTIONAL ADDRESS.)

J. H. BUCK AND C. F. LEYSE

8A. COLLABORATIVE INSTITUTIONAL AUTHOR AFFILIATION

☐ INDUSTRIAL ☐ EDUCATIONAL ☐ FOREIGN ☐ GOVERNMENT

9. SPONSOR (DOE, NRC, EPA, etc.)

10. BUDGET AND REPORTING CODE	11. FWP NO.	12. FIN NO.	13. INTERAGENCY AGREEMENT NO.

14. CLEARANCE FOR : (SELECT ALL APPROPRIATE CATEGORIES)

☐ ORNL REPORT

☐ INTERNAL ☐ EXTERNAL ☐ TOPICAL ☐ PROGRESS ☐ ADMINISTRATIVE

☐ PRELIMINARY "NOTICE" TO APPEAR ON TITLE PAGE ☐ FINAL (REPRODUCE WITHOUT "NOTICE")

PRESENTATION

☐ ORAL

☐ PUBLISHED

☐ FULL TEXT ☐ ABSTRACT/SUMMARY ☐ EXTENDED ABSTRACT ☐ OUTLINE OR VIEWGRAPHS ☐ POSTER

AUDIENCE: ☐ INTERNAL ☐ EXTERNAL INVITED: ☐ YES ☐ NO REFEREED: ☐ YES ☐ NO

MEETING TITLE AND LOCATION DATE

ABOVE PRESENTATION WILL BE PUBLISHED AS: ☐ FULL TEXT ☐ ABSTRACT ONLY ☐ NOT PUBLISHED

LIST PUBLISHER IF KNOWN

☐ JOURNAL PUBLICATION

JOURNAL SUBMITTED TO:

INVITED ☐ YES ☐ NO REFEREED ☐ YES ☐ NO

TO BE PUBLISHED AS: ☐ FULL ARTICLE ☐ ABSTRACT ONLY

☐ BOOK

☐ EDITOR ☐ AUTHOR PUBLISHER

☐ BOOK CHAPTER

TITLE OF BOOK

EDITOR PUBLISHER

☐ THESIS

UNIVERSITY (NAME, CITY, STATE)

DEGREE TO BE ISSUED AS A REPORT: ☐ YES ☐ NO REPORT NO.

☐ OTHER

☐ NON ORNL REPORT ☐ BOOK REVIEW ☐ ENCYCLOPEDIA ARTICLE ☐ NEWSLETTER

☐ TESTIMONY ☐ CAPE PACKAGE ☐ VIDEOSCRIPT ☐ MISCELLANEOUS

15. WAS A USER FACILITY UTILIZED IN THE RESEARCH REPORTED IN THIS PUBLICATION? ☐ YES ☐ NO IF YES, WHICH FACILITY? (SEE INSTRUCTIONS FOR LIST.)

16. IS THE INFORMATION IN THIS DOCUMENT SUITABLE FOR TECHNOLOGY TRANSFER? ☐ YES ☐ NO

17. CONDITIONS FOR EXTERNAL DISTRIBUTION OF REPORTS

- [ ] Unlimited Access
- [ ] Applied Technology
- [ ] Official Use Only. (Sensitive Foreign Trip Reports Only)
- [ ] CRADA, Cooperative Research Agreement
- [ ] Contains Proprietary Information.
- [ ] Contains Unclassified Controlled Nuclear Information (UCNI).
- [ ] Contains Export Control/TAR/EAR.
- [ ] Contains Small Business Innovation Research (SBIR).
- [ ] Contains Translations of copyrighted material.
- [ ] Other (Explain in the remarks section below)

18. REPORT CATEGORY DISTRIBUTION (MUST BE DETERMINED BY AUTHOR)

[ ] Category Distribution UC- _____ NRC- _____

Copies for category distribution furnished by ORNL [ ] (full size); by OSTI [ ] (microfiche.)

[ ] I have reviewed and revised (as necessary) the distribution list for this document. (Required)

19. PREVIOUSLY CLEARED, RELATED DOCUMENT (Paper, abstract, progress report, etc., containing similar information indicate if classified.)

20. INVENTIONS (List page no. of any item appearing to have significant novelty; indicate if none.)

20A. DOES DOCUMENTATION CONTAIN COPYRIGHTED INFORMATION [ ] YES [ ] NO (IF YES, ATTACH PERMISSION FOR USE)

21. APPROVED BY

	SIGNATURES (AS REQUIRED)	DATE
AUTHOR OR REQUESTER		
SUPERVISOR		
PROGRAM DIRECTOR OR MANAGER		
DIVISION DIRECTOR		
ASSOCIATE LABORATORY DIRECTOR		

REMARKS

NOTE: For work supported by NRC Funds, enter the NRC Program sponsor's name and phone number and the ORNL Branch/Unit contact's name and phone number of the ORNL contact in the Remarks Section above.

LABORATORY RECORDS REVIEW	DATE	TECHNICAL PUBLICATIONS DEPT.	DATE	REPRODUCTION DEPT.	DATE
David R Hamrin	2/16/93				

22. CLASSIFICATION CHECK (FOR CLASSIFICATION OFFICER'S USE)

DOCUMENT PROPERLY CLASSIFIED AS: [ ] CONFIDENTIAL [ ] RD [ ] FRD [ ] SECRET [ ] NSI

[✓] DOCUMENT CONTAINS NO CLASSIFIED INFORMATION [ ] UCNI [ ] APPLIED TECHNOLOGY

CLASSIFICATION OFFICER/DERIVATIVE CLASSIFIER'S SIGNATURE _____ DATE 2/19/93

23. PATENT CHECK (FOR ORNL PATENT SECTION'S USE

[X] DOCUMENT MAY BE RELEASED TO OSTI AND NTIS

PREPRINT AUTHORIZED? [✓] YES [ ] NO

PATENT SECTION _____ DATE 2/12/93

24. CHECK LIST (FOR LABORATORY RECORDS DEPARTMENT'S USE)

REPRODUCIBLES FOR INTERNAL DOCUMENTS ONLY

- [ ] FOR INTERNAL USE ONLY
- [ ] DISTRIBUTION LIMITED TO RECIPIENTS INDICATED
- [ ] SPECIAL DISTRIBUTION
- [ ] CAUTION NOTICE

REPRODUCIBLES OF ORNL GENERATED DOCUMENTS MUST BE CHECKED FOR:

COPIES FOR OSTI	[ ] YES	[X] NO
COPIES FOR CRL/Y-12 TECHNICAL LIBRARY	[ ] YES	[X] NO
COPIES FOR LRD (INCLUDING RC)	[X] YES	[ ] NO
COPY FOR PATENT SECTION	[ ] YES	[✓] NO

[redacted]

ORNL-963 – VOL I

This document consists of 299 pages.
Copy 37 of 50. Series B.

Contract No. W-7405, eng 26

MATERIALS TESTING REACTOR PROJECT HANDBOOK

Prepared Jointly by Argonne National Laboratory
and
Oak Ridge National Laboratory

John H. Buck . . . . . Editor
Carl F. Leyse . . . . Associate Editor

Prepared at the request of the MTR Steering Committee

DATE ISSUED SEP 12 1952

OAK RIDGE NATIONAL LABORATORY
operated by
CARBIDE AND CARBON CHEMICALS COMPANY
A Division of Union Carbide and Carbon Corporation
Post Office Box P
Oak Ridge, Tennessee

[redacted]

[redacted]

[redacted]

ORNL 963-Vol I
Reactors-Research and Power
Series B

DISTRIBUTION

1-50. Central Files

[redacted]

[redacted]

ACKNOWLEDGMENT

The MTR Project Handbook has been made possible only through the cooperation of every member of the MTR groups at Argonne National Laboratory and Oak Ridge National Laboratory. Some have written the initial draft for entire chapters, some for sections of chapters, and many have spent much time and effort in gathering and collating data. All this work was essential to the completion of the Handbook, and the editors sincerely hope that the report fulfills the expectations of the Committee and every other member of the Project.

[redacted]

TABLE OF CONTENTS

Chap. 1 INTRODUCTION — GENERAL DESCRIPTION AND HISTORY OF THE MTR 1.1

1.1 General Description of the Reactor, Its Location, and Facilities 1.1

1.1.1 Brief general description of the Materials Testing Reactor 1.1
1.1.2 Location 1.2
1.1.3 Availability of utilities and supplies 1.2
1.1.4 AEC central facilities 1.2
1.1.5 MTR facilities 1.4
1.1.6 Climate 1.5
1.1.7 Geology 1.6

1.2 History of the MTR 1.6

1.2.1 Need for reactor 1.6
1.2.2 Design and administrative history 1.7

1.3 Reference Reports 1.18

1.4 Reference Drawings 1.18

Chap. 2 ENGINEERING DESCRIPTION OF THE REACTOR 2.1

2.1 Reactor Enclosure Tank 2.1

2.1.1 Tank sections A and E 2.2
2.1.2 Tank section B 2.2
2.1.3 Tank sections C and D 2.3
2.1.4 Top and bottom plugs 2.4

2.2 The Active Lattice and Supporting Structure 2.4

2.3 The Control Rods 2.9

2.3.1 Shim-safety control rods 2.9
2.3.2 Regulating rods 2.13
2.3.3 Miscellaneous equipment connected with control rods 2.15

2.4 Reflector 2.19

2.4.1 Beryllium 2.19
2.4.2 Graphite 2.23

2.5 Thermal Shield 2.32

2.5.1 The steel plate structure 2.32
2.5.2 Neutron curtain in the MTR 2.35
2.5.3 The neutron window 2.35

2.6 The Biological Shield 2.36

2.7 Cooling 2.36

2.7.1 Water cooling 2.36
2.7.2 Air cooling 2.38

2.8 Monitoring Equipment 2.40

2.8.1 Monitor tubes 2.40
2.8.2 Thermocouples 2.42

2.9 Handling Tools 2.42
2.9.1 Design summary 2.44

2.10 Reference Reports 2.46

2.11 Reference Drawings 2.47

Chap. 3 EXPERIMENTAL FACILITIES 3.1

3.1 Horizontal and Down Beam Experimental Holes 3.1

3.1.1 Introduction 3.1
3.1.2 Beam hole liners and components 3.4
3.1.3 Beam hole dummy plugs 3.12
3.1.4 Horizontal through hole facility 3.14
3.1.5 Other horizontal experimental and instrument holes 3.17
3.1.6 Services 3.18
3.1.7 Coffins 3.18

3.2 Vertical Experimental and Instrument Holes 3.22

3.2.1 Instrument holes 3.23
3.2.2 Experimental holes 3.24

3.3 Thermal Column 3.25

3.3.1 General description 3.25
3.3.2 Thermal column experimental facilities 3.28

[redacted]

3.4 Shielding Facility 3.29

3.5 Pneumatic Rabbits 3.30

3.6 Hydraulic Rabbits 3.31

3.7 Reference Reports 3.32

3.8 Reference Drawings 3.33

Chap. 4 PHYSICS OF THE MATERIALS TESTING REACTOR 4.1

4.1 Review of Requirements 4.1

4.2 Flux Calculations 4.2

4.3 Reactivity Losses 4.10

4.3.1 Xe^{135} and Sm^{149} poisoning 4.14

4.3.2 Depletion of U^{235} and other fission product poisoning 4.18

4.3.3 Temperature coefficient 4.18

4.3.4 Thorium blanket 4.20

4.3.5 Other reactivity losses 4.20

4.3.6 Total reactivity of reactor 4.20

4.4 Dynamics of the Reactor 4.23

4.5 Heat Production, Transfer, and Removal 4.24

4.5.1 Calculations of heat inside active lattice 4.25

4.5.2 Calculations of heat in beryllium and in foreign materials near active lattice 4.26

4.5.3 Heating and cooling of the graphite reflector 4.28

4.5.4 Heating and cooling of the thermal shield 4.29

4.5.5 Cooling requirements at reduced power levels and after shutdown 4.29

4.6 Shielding Summary 4.36

4.6.1 Fundamental concepts 4.37

4.6.2 Concrete shield design 4.47

4.6.3 Supplementary shielding problems 4.60

4.7 Reference Reports 4.86

[redacted]

Chap. 5 CONTROL SYSTEM 5.1

5.1 Introduction 5.1

5.1.1 Review of requirements 5.1
5.1.2 General features of the MTR control system 5.2

5.2 Measuring Instruments 5.4

5.2.1 Reactor instruments 5.4
5.2.2 Rod position and motion indicators 5.15
5.2.3 Auxiliary facilities instruments 5.17

5.3 Rod Motion Controls 5.20

5.3.1 Safety rod clutches 5.20
5.3.2 Motor drive of shim rods 5.22
5.3.3 Motor drive of regulating rods 5.24
5.3.4 Control system during maintenance shutdown 5.28

5.4 Control Console 5.30

5.5 Control System and Operator 5.34

5.5.1 Automatic rod insertion 5.34
5.5.2 Operator initiative and the procedure panel 5.35

5.6 Reactor Operation 5.42

5.6.1 Start-up operation 5.42
5.6.2 Shutdown 5.43
5.6.3 Manipulation of operating level 5.43
5.6.4 Operation in face of difficulty 5.44

5.7 General Summary 5.46
5.7.1 Basic principles 5.46
5.7.2 Responsibility of operator 5.50

5.8 Control and Instrument Centers 5.51

5.8.1 Reactor control and instrument center 5.51
5.8.2 Process-water control and instrument center 5.54

5.9 Glossary of Terms and Symbols 5.54

5.10 Reference Reports 5.57

5.11 Reference Drawings 5.58

Chap. 6 CANAL AND CANAL HANDLING FACILITIES 6.1

6.1 Canal 6.1

6.1.1 General description 6.1
6.1.2 Canal purge system 6.4
6.1.3 Canal flushing 6.5
6.1.4 Heating and ventilation of canal tunnel 6.5
6.1.5 Canal lighting 6.5
6.1.6 Canal crane 6.5

6.2 Unloading Mechanism 6.6

6.2.1 General description 6.6
6.2.2 Operation sequence 6.8
6.2.3 Control system 6.8

6.3 Canal Storage 6.11

6.3.1 Beryllium assemblies 6.11
6.3.2 Standard fuel assemblies 6.11
6.3.3 Shim-safety rods 6.11
6.3.4 Regulating rods 6.12

6.4 Assembly Disposal 6.12

6.4.1 Sawing machine 6.12
6.4.2 Chip collector 6.12
6.4.3 Transfer to decay storage 6.14
6.4.4 Transfer coffin 6.14

6.5 Reference Reports 6.15

6.6 Reference Drawings 6.16

Chap. 7 PROCESS-WATER SYSTEM 7.1

7.1 Introduction 7.1

7.2 The System in General 7.1

7.2.1 General description of the system 7.1
7.2.2 Stand-by and emergency features 7.4
7.2.3 Instrumentation and flow balance 7.5
7.2.4 Water-cooled experimental plugs and rabbits 7.7
7.2.5 Process water building 7.7

7.3 Major Components of the System 7.8

7.3.1 Sump tank 7.8
7.3.2 Process pumps 7.8
7.3.3 Working reservoir 7.11
7.3.4 Valve pit 7.12
7.3.5 Seal tank and pump 7.12
7.3.6 Flash evaporators 7.12
7.3.7 Piping 7.14

7.4 Bases for Design 7.15

7.4.1 Flow quantity and heat transfer 7.15
7.4.2 Degasification 7.16
7.4.3 Water quality and materials of construction 7.18
7.4.4 Induced activity 7.21
7.4.5 Shielding 7.23
7.4.6 Cooling after shutdown 7.23

7.5 Reference Reports 7.29

7.6 Reference Drawings 7.31

Chap. 8 REACTOR COOLING-AIR AND CONTAMINATED-AIR SYSTEMS 8.1

8.1 Reactor Cooling-air System 8.1

8.1.1 Introduction 8.1
8.1.2 Air flow data 8.1
8.1.3 Inlet air filters 8.5
8.1.4 System within reactor structure 8.7
8.1.5 Exit ducts 8.9
8.1.6 Blowers, fans, and auxiliaries 8.9
8.1.7 Instrumentation and control 8.11
8.1.8 Shielding 8.12

8.2 Contaminated-air System 8.14

8.2.1 Introduction 8.14
8.2.2 Air flow data 8.14
8.2.3 System from hoods to scrubber 8.14
8.2.4 Scrubber 8.14

8.2.5 Exit duct from scrubber 8.16
8.2.6 Exhaust fans and auxiliaries 8.16
8.2.7 Instrumentation and control 8.16
8.2.8 Shielding 8.17

8.3 Blower and Fan House 8.18

8.3.1 Introduction 8.18
8.3.2 Air ducts and plenum chamber 8.18
8.3.3 Blower and fan cells 8.20
8.3.4 Miscellaneous 8.20

8.4 Stack 8.21

8.4.1 Introduction 8.21
8.4.2 Activity of stack gases 8.21
8.4.3 Stack height 8.22
8.4.4 Stack diameter 8.23
8.4.5 General construction 8.23

8.5 Reference Reports 8.24

8.6 Reference Drawings 8.25

Chap. 9 SITE AND BUILDINGS 9.1

9.1 Site Plan 9.1

9.2 Reactor Building 9.5

9.2.1 General building details 9.7
9.2.2 First floor 9.8
9.2.3 Second and third floors 9.13
9.2.4 Basement 9.14

9.3 Reactor Building Wing 9.16

9.3.1 General building details 9.16
9.3.2 First floor 9.17
9.3.3 Basement 9.21
9.3.4 Future additions 9.23

9.4 Service Buildings and Areas 9.23
9.4.1 Service building, Area 14 9.23
9.4.2 Limited-area control house, Area 20 9.23
9.4.3 Exclusion-area control house, Area 21 9.24
9.4.4 Canteen, Area 16 9.24
9.4.5 Plug storage, Area 11 9.24
9.4.6 Reactor service building 9.24
9.4.7 Other buildings and areas 9.25
9.5 Reference Reports 9.26
9.6 Reference Drawings 9.27

Chap. 10 SUPPORTING FACILITIES AND AUXILIARIES 10.1
10.1 Steam Plant 10.1
10.2 Electrical Systems 10.1
10.2.1 Introduction 10.1
10.2.2 Sources of electrical power 10.2
10.2.3 Distribution systems 10.4
10.2.4 Load power factor 10.7
10.2.5 Electrical grounding 10.7
10.3 Water 10.8
10.3.1 Introduction 10.8
10.3.2 Water requirements 10.8
10.3.3 Water analysis 10.10
10.3.4 Demineralization system 10.12
10.3.5 Softeners 10.13
10.3.6 Acid-neutralization system for cooling-tower make-up water 10.14
10.3.7 Design and operating data summary 10.14
10.3.8 Instrumentation, laboratory, and housing 10.15
10.4 Effluent Control 10.15
10.4.1 Introduction 10.15
10.4.2 Retention basin 10.16
10.4.3 Effluent pond 10.18
10.4.4 Nonprocess active effluents 10.18

10.5 Cooling Towers 10.20

10.5.1 General description 10.20

10.5.2 Heat load 10.20

10.5.3 Operation and description of cooling towers and basins 10.21

10.5.4 Pumping station 10.22

10.5.5 Instrumentation 10.22

10.5.6 Emergency operation 10.23

10.5.7 Design data 10.23

10.6 Process Radiation Instrumentation and Area Monitoring 10.24

10.6.1 Process radiation instrumentation 10.24

10.6.2 Area monitoring 10.26

10.7 Reference Reports 10.28

10.8 Reference Drawings 10.29

Appendix 1 CRITICALITY STUDIES ON ENRICHED URANIUM—HEAVY WATER SYSTEMS A1.1

A1.1 Experimental Arrangement A1.1

A1.2 Critical Mass Experiments A1.3

A1.3 Reference Report A1.11

Appendix 2 WORK ON CRITICAL EXPERIMENTS, JULY 1946 TO DECEMBER 1948 A2.1

A2.1 Critical Experiments with Al + H_2O Moderator and Heavy Water, Light Water, and Beryllium Reflectors A2.1

A2.1.1 Experimental facilities A2.1

A2.1.2 Pile geometry and design A2.3

A2.1.3 Results and discussion A2.5

A2.2 Further Critical Experiments on Enriched Reactors with Al + H_2O Moderator and Solid Beryllium Reflector A2.11

A2.2.1 Experimental facilities A2.11

A2.2.2 Experimental results A2.13

A2.3 Reference Reports A2.20

[redacted]

Appendix 3 CRITICAL EXPERIMENTS ON SIMULATED MTR STRUCTURE A3.1

A3.1 The Excess Reactivity of U-Al-H_2O Reactors, with Be Reflector, as a Function of Geometry and Reflector Composition A3.1

A3.2 Effects of the Experimental Holes Through the Reflector A3.5

A3.3 Neutron Distributions A3.10

A3.4 Gamma Heat Production in the Reflector A3.11

A3.5 Control Rod Experiments A3.18

A3.6 Reference Reports A3.20

Appendix 4 MOCK-UP A4.1

A4.1 Description of Facility A4.1

A4.2 Mechanical Experiments A4.6

A4.2.1 Stress-strain measurements A4.6

A4.2.2 Control system A4.7

A4.3 Hydraulic Experiments A4.16

A4.3.1 Flow in reflector outside the fuel lattice A4.17

A4.3.2 Flow and pressure drops inside fuel lattice A4.23

A4.4 Handling Tools A4.29

A4.5 Nuclear Experiments A4.29

A4.5.1 Critical mass determination A4.29

A4.5.2 Regulating-rod calibration A4.32

A4.5.3 Temperature coefficient A4.36

A4.5.4 Effect of an empty experimental beam hole A4.37

A4.5.5 Effect of water flow A4.37

A4.5.6 Performance of control and safety circuits A4.37

A4.5.7 Measurement of neutron fluxes A4.38

A4.5.8 Heat production in graphite, thermal shield, and concrete A4.51

A4.5.9 Attenuation of gamma rays inside reactor tank A4.57

A4.6 Reference Reports A4.69

[redacted]

[redacted]

Appendix 5 BERYLLIUM A5.1

A5.1 Chemical and Mechanical Tests A5.1

A5.2 Manufacture and Specifications of MTR Beryllium A5.2

A5.3 Danger Coefficient and Total Danger Sum (TDS) as Applied to Beryllium A5.5

A5.4 Reference Reports A5.6

Appendix 6 FUEL ELEMENTS A6.1

A6.1 Development A6.1

A6.2 Construction of Plates A6.3

A6.3 Fabrication of the Fuel Elements A6.5

A6.4 Reference Reports A6.8

A6.5 Reference Drawings A6.9

Appendix 7 PROPERTIES OF SHIELDING MATERIALS A7.1

Appendix 8 SHIELDING CALCULATION AIDS A8.1

Appendix 9 PNEUMATIC RABBITS A9.1

A9.1 General Description of Proposed Re-entry Shuttle System A9.1

A9.2 Proposed Equipment and Facilities for Re-entry Shuttle System A9.1

A9.2.1 Rabbit tube A9.4

A9.2.2 Electric air-controlled gate valve A9.4

A9.2.3 Shuttle transfer A9.5

A9.2.4 Laboratory Selector A9.5

A9.2.5 Shock absorber A9.5

A9.2.6 Delivery stations and delivery-station shock absorbers A9.8

A9.2.7 Pneumatic driving system A9.8

A9.2.8 Vacuum system A9.9

A9.3 Operation of Re-entry Shuttle System A9.9

A9.3.1 Pressure drop A9.11

A9.3.2 Anticipated operating curves A9.11

[redacted]

A9.3.3 Shuttle material A9.13
A9.3.4 Cooling of the shuttle A9.13
A9.3.5 Shielding A9.14
A9.3.6 Use of air vs. CO_2 for propellant A9.14

A9.4 Reference Reports A9.14

A9.5 Reference Drawings A9.14

Appendix 10 HYDRAULIC RABBITS A10.1

LIST OF TABLES

Table 2.3.A	Cadmium-Uranium Shim Rods	2.10
Table 2.3.B	Regulating Rod	2.13
Table 2.7.A	Summary of Results of Calculations and Experiments Leading to Design of Water-flow System	2.37
Table 2.8.A	Locations of Thermocouples	2.43
Table 3.A	Summary of Experimental Facilities	3.2
Table 4.2.A	Fluxes in Light Water and Heavy Water Reactors	4.3
Table 4.3.A	Partial Temperature Coefficients at 20°C, Al-H_2O Neutron Temperature	4.19
Table 4.3.B	Minimum Reactivity Losses Which Must Be Allowed for in Reactor	4.20
Table 4.5.A	Reduction Factors After Shutdown	4.33
Table 4.5.B	Cumulative Heat After Shutdown	4.34
Table 4.5.C	Fall-off of Heat Rates and Water Rates	4.35
Table 4.6.A	Total Cross-sections of Portland and Barytes Concretes at 5 Mev	4.41
Table 4.6.B	Total Cross-sections of Ordinary and Barytes Concretes in 1- to 2-Mev Range	4.42
Table 4.6.C	Required Biological Shield Thickness	4.57
Table 4.6.D	Elements with High γ-Ray Activities	4.83
Table 4.6.E	Induced Activity of Commercial Materials	4.85
Table 5.2.A	Reactor Radiation Instruments	5.5
Table 5.2.B	Relation of Lower Level to Instruments	5.7
Table 5.5.A	Causes of Automatic Rod Insertion	5.36
Table 7.4.A	Activity of MTR Process Water	7.24
Table 7.4.B	Minimum Process-water Flow After Shutdown	7.27
Table 7.4.C	Process-water Temperature After Shutdown	7.27

[redacted]

Table 8.1.A	Approximate Pressure Drops in Reactor Air System	8.3
Table 8.1.B	Activity of Reactor-cooling Air	8.13
Table 8.1.C	Shielding Requirements for the Reactor Air System	8.13
Table 8.2.A	Shielding Requirements for the Contaminated-air System	8.18
Table 8.4.A	Production of A^{41} in the MTR	8.22
Table 10.3.A	Total Water Requirements	10.10
Table 10.3.B	Raw-water Analysis	10.11
Table 10.3.C	Demineralized-water Analysis	10.12
Table 10.3.D	Water System Design and Operating Data	10.14
Table 10.4.A	Water Flows to Retention Basin	10.17
Table 10.6.A	Area Radiation Monitoring Instruments	10.27
Table A1.A	Amounts of U^{235} Required for Criticality in Various D_2O Systems	A1.8
Table A1.B	Collected Dimensions and Constants of the Experiments	A1.10
Table A2.A	Critical Masses in Kilograms of U^{235}	A2.9
Table A2.B	Relations Between Thermal Flux at Certain Locations in the Reactor and That at Center of Core	A2.19
Table A3.A	Critical Mass and Poison Content (Excess k) of U-Al-H_2O Reactors with Be Reflector	A3.4
Table A3.B	Effect of Experimental Holes in the High-flux Reactor Critical Assemblies	A3.7
Table A3.C	Summary of Total Effect of Experimental Holes	A3.8
Table A4.A	Water Velocities in Various Reflector Channels	A4.20
Table A4.B	Flow Rates for Various Reflector Holes	A4.21
Table A4.C	Flow Rates at Pressure Tap 41	A4.22
Table A4.D	Flow Rates in Reflector	A4.22
Table A4.E	Pressure Drops and Flow Rates Through Tank Section D	A4.27

[redacted]

Table A4.F	Experimental Values for Temperature Coefficient	A4.36
Table A4.G	Neutron Flux in Mid-plane (First Series)	A4.40
Table A4.H	Neutron Flux in Mid-plane (Second Series)	A4.48
Table A4.I	Horizontal Traverse	A4.49
Table A4.J	Traverses Behind Hole 17 on Surface of Graphite	A4.50
Table A4.K	Heat Production in Mid-plane, Graphite Reflector	A4.64
Table A4.L	Measured Heat Production in Top and Bottom Planes of Graphite Reflector	A4.65
Table A6.A	Fuel Assembly Plates	A6.2
Table A7.A	Properties of Shielding Materials	A7.1
Table A7.B	Summary of Some Declassified Nuclear Data	A7.7

LIST OF FIGURES

Fig. 2.2.A	Cross Section of Fuel Assembly	2.6
Fig. 2.2.B	Fuel Assembly Unit No. 136	2.7
Fig. 2.3.A	Shim-Safety Rod with Fuel	2.11
Fig. 2.3.B	Shim-Safety Rod with Beryllium	2.12
Fig. 2.3.C	Regulating Rod	2.14
Fig. 2.4.A	Beryllium Below Centerline of Reactor	2.20
Fig. 2.4.B	Top View of Beryllium	2.21
Fig. 2.4.C	Beryllium A-Piece	2.22
Fig. 2.4.D	Beryllium Assembly	2.24
Fig. 2.4.E	Beryllium Assembly	2.25
Fig. 2.4.F	Partial Beryllium Assembly	2.26
Fig. 2.4.G	Beryllium Showing HB and DB Holes	2.27
Fig. 2.4.H	Permanent Graphite	2.29
Fig. 2.4.I	Graphite Assembly and Numbering System	2.30
Fig. 2.4.J	Part of Graphite West Wall	2.31
Fig. 2.5.A	Top Thermal Shield Design	2.34
Fig. 2.7.A	Hole Pattern for the Graphite Reflector	2.39
Fig. 2.8.A	Reactor Tank Monitor Tube Assembly	2.41
Fig. 2.A	MTR North-South Vertical Section	2.48
Fig. 2.B	MTR East-West Vertical Section	2.49
Fig. 2.C	MTR Horizontal Section	2.50
Fig. 2.D	Pictorial Cross Section, Reactor Tank	2.51
Fig. 2.E	MTR General Assembly	2.52
Fig. 2.F	MTR Top Plug Assembly	2.53
Fig. 3.1.A	Typical Beam Hole Liner and Components	3.5
Fig. 3.1.B	Typical Beam Hole Water-cooled Dummy Plug	3.6
Fig. 3.1.C	Typical Beam Hole Air-cooled Dummy Plug	3.7

Fig. 3.1.D	Horizontal Through Hole Facility	3.8
Fig. 3.1.E	Universal Coffin	3.20
Fig. 3.3.A	Thermal Column — Cutaway View Without Graphite Filter or Surrounding Concrete	3.26
Fig. 3.3.B	Graphite Assembly for Thermal Column	3.27
Fig. 3.A	View of North Face of Reactor	3.34
Fig. 3.B	View of East Face of Reactor	3.35
Fig. 3.C	View of South Face of Reactor	3.36
Fig. 3.D	View of West Face of Reactor	3.37
Fig. 3.E	View of Top of Reactor	3.38
Fig. 3.F	Location of Experimental Facilities on Reactor Top	3.39
Fig. 3.G	Reactor Building First Floor Plan	3.40
Fig. 4.2.A	Neutron Flux Distributions and Adjoint Functions	4.4
Fig. 4.2.B	Neutron Flux Distributions and Adjoint Functions	4.5
Fig. 4.2.C	Neutron Flux Distributions and Adjoint Functions	4.6
Fig. 4.2.D	Longitudinal Flux Distributions	4.7
Fig. 4.2.E	Distribution Measured from Center of 40 cm Dimension	4.8
Fig. 4.2.F	Thin Slab (11 × 60 × 70 cm) Core	4.9
Fig. 4.2.G	Neutron Distribution, 40 × 30 × 60 Slab Pile With and Without Thorium Breeding Sheet Present	4.11
Fig. 4.3.A	Reactivity Loss, $-\delta k/k$, Due to Xe^{135}, Sm^{149}, 25 Depletion, and Build-up of Low-cross-section Fission Products as Function of Time of Operation	4.15
Fig. 4.3.B	Reactivity Loss, $-\delta k/k$, Due to Xe^{135}, Sm^{149}, 25 Depletion, and Build-up of Low-cross-section Fission Products as Function of Time of Operation up to 36 hr	4.16
Fig. 4.3.C	Extra Reactivity Change After Shutdown	4.17
Fig. 4.3.D	$\delta k/k$ Which Must Be Taken Up by Control Rods or Poisons to Keep Pile Critical vs. Mass of 25 in Pile	4.22
Fig. 4.5.A	Average Heat Distribution in Reflector Around Slab Pile	4.27
Fig. 4.5.B	Heat Production in Reflector for Slab or Square Loading	4.30

[redacted]

Fig. 4.5.C	Cooling Requirements as Function of Power	4.31
Fig. 4.6.A	Photon Flux as Function of Energy for Dose Rate = 0.01 rep/8 hr	4.38
Fig. 4.6.B	Fast-neutron Flux for One-tenth Tolerance Dose	4.39
Fig. 4.6.C	Indium Foil Activation Against Depth in Pile Shield	4.44
Fig. 4.6.D	Pictorial Representation of Required Shield Thicknesses	4.54
Fig. 4.6.E	Geometric Factor Illustration	4 56
Fig. 4.6.F	Thickness Required for Given Attenuation with Relaxation Lengths of 8.2 and 10 cm	4.59
Fig. 4.6.G	Map of Neutron and Gamma Rays in Corner Regions of Concrete at Mid-plane	4.61
Fig. 4.6.H	Comparison of Overall Barytes Concrete Thickness with Design Requirements	4.62
Fig. 4.6.I	Comparison of Overall Barytes Concrete Thickness with Design Requirements	4.63
Fig. 4.6.J	Cross Section of a Duct Through the Shield	4.79
Fig. 5.1.A	Control System Block Diagram	5.3
Fig. 5.2.A	Materials Testing Reactor Instrumentation Block Diagram	5.6
Fig. 5.2.B	Neutron sensitive 3-in. P.C.P. Ionization Chamber	5.9
Fig. 5.2.C	Compensated Ionization Chamber	5.11
Fig. 5.2.D	Fission Chamber Assembly	5.12
Fig. 5.2.E	Shim Rod Limit Switches	5.16
Fig. 5.2.F	Regulating-rod Limit Switches	5.18
Fig. 5.3.A	Sigma Amplifier and Safety Preamp Circuits	5.21
Fig. 5.3.B	Magnet Amplifier Circuit	5.23
Fig. 5.3.C	Servo Input Signal	5.25
Fig. 5.3.D	Servo Amplifier and Servo Preamp Circuit	5.27
Fig. 5.4.A	Control Console Layout	5.31
Fig. 5.5.A	Block Diagram Including Procedure Panel	5.47
Fig. 5.8.A	Reactor Control Room and Instrument Panel Layout	5.53
Fig. 5.8.B	Process Water Building Control and Instrument Panel Layout	5.55

[redacted]

Fig. 6.1.A	Reactor Building — Basement Plan	6.2
Fig. 6.2.A	Unloading Mechanism	6.7
Fig. 6.2.B	Unloading Mechanism Control System	6.10
Fig. 6.4.A	Sawing Mechanism	6.13
Fig. 7.2.A	Schematic Diagram of MTR Process Water System	7.2
Fig. 7.2.B	Process Water Building Floor Plans	7.9
Fig. 7.2.C	Process Water Building Sections	7.10
Fig. 7.4.A	Process Water Pipe Shielding	7.25
Fig. 8.1.A	Reactor-air System Schematic Flow Diagram	8.2
Fig. 8.1.B	MTR Air System	8.8
Fig. 8.2.A	Contaminated-air System Schematic Flow Diagram	8.15
Fig. 8.3.A	Blower and Fan House Layout	8.19
Fig. 9.1.A	MTR Site — Artist's Sketch	9.2
Fig. 9.1.B	Site Plan	9.3
Fig. 9.2.A	Reactor Building and Wing — Artist's Sketch	9.6
Fig. 9.2.B	Reactor Building — First Floor Plan	9.9
Fig. 9.2.C	Reactor Building — Second and Third Floors	9.10
Fig. 9.2.D	Reactor Building — Basement Plan	9.11
Fig. 9.3.A	Reactor Building Wing — First Floor	9.18
Fig. 9.3.B	Reactor Building Wing — Basement	9.22
Fig. 10.2.A	Electrical Underground Distribution and Site Lighting	10.5
Fig. 10.3.A	MTR Water System	10.9

[redacted]

Fig. A1.A	Tank and Fuel Arrangement	A1.2
Fig. A1.B	Tube Sheet Lattice Arrangement	A1.4
Fig. A1.C	Radial Neutron Distribution in 2.58 g/l Assembly	A1.5
Fig. A1.D	Longitudinal Neutron Distribution in 2.58 g/l Assembly	A1.6
Fig. A2.A	Section Through Assembly and Control Rooms	A2.2
Fig. A2.B	Assembly for D_2O Reflector	A2.4
Fig. A2.C	Assembly for Beryllium Reflector	A2.6
Fig. A2.D	Reactor Assembly Beryllium Reflector	A2.7
Fig. A2.E	Radial Neutron Distributions — Beryllium Reflector	A2.8
Fig. A2.F	Vertical Distribution — Beryllium Experiment	A2.10
Fig. A2.G	Reactor Assembly	A2.12
Fig. A2.H	Approach to Criticality, Bare Pile, Al/H_2O Volume Ratio 0.65	A2.14
Fig. A2.I	Approach to Critical, Slab Pile, Lattice 65-Be-2	A2.16
Fig. A2.J	Square Be Pile, Lattice 65-Be-1, Lateral Neutron Distribution	A2.17
Fig. A2.K	Square Be Pile, Lattice 65-Be-1, Neutron Distributions Along Diagonal	A2.18
Fig. A3.A	Reactor Assembly	A3.3
Fig. A3.B	Critical Assemblies, Location of Holes in Reflector	A3.6
Fig. A3.C	Effect of Absorber, 10 × 10 × 10 cm, 0.020-in. Cd Box	A3.9
Fig. A3.D	Lattice 65-Be-3 (2.94 kg) Lateral Traverse	A3.12
Fig. A3.E	4-kg Slab Pile (71 × 22.5 × 66 cm), 2% H_2O in Be; Neutron Distributions (Along Axis of 6-in. Hole at Edge of Reactor)	A3.13
Fig. A3.F	4-kg Slab Pile (71 × 22.5 × 66 cm), Seven 6-in. Holes in Reflector, Lateral Neutron Distributions (Along Axis of Center Hole)	A3.14
Fig. A3.G	4-kg Slab Pile (71 × 22.5 × 66 cm), Seven 6-in. Holes in Reflector, Lateral Neutron Distributions (Along Axis of Edge Hole)	A3.15
Fig. A3.H	4-kg Slab Pile (71 × 22.5 × 66 cm), Seven 6-in. Holes in Reflector, Longitudinal Neutron Distributions (Along Axis of End Hole)	A3.16

[redacted]

Fig. A3.I	Traverse Taken Between Two Deep Holes at Mid-height of Pile	A3.17
Fig. A3.J	Gamma Heat Production in Reflector of 3-kg Pile (71 × 17 × 66 cm)	A3.19
Fig. A4.A	Diagram of Pile Tank	A4.2
Fig. A4.B	MTR Mock-Up Assembly for Low-power Experiments	A4.4
Fig. A4.C	Layout of Holes for Flux Measurements Outside of Reactor Tank	A4.5
Fig. A4.D	Rate of Fall — Safety Rod	A4.10
Fig. A4.E	Deceleration of Safety Rod	A4.11
Fig. A4.F	Westinghouse-built MTR Magnet No. 1, Load vs. Release Current	A4.13
Fig. A4.G	Typical Magnet Release Tests	A4.14
Fig. A4.H	Location of Pressure Taps Above Thimbles	A4.18
Fig. A4.I	Location of Pressure Taps Below Thimbles	A4.19
Fig. A4.J	Cross Section of MTR	A4.24
Fig. A4.K	Velocity-Pressure Drop Curve for Fuel Assemblies	A4.25
Fig. A4.L	Calibration of Cadmium Shim-Safety Rod	A4.28
Fig. A4.M	Tank Cover for Use in Assembly	A4.30
Fig. A4.N	Upper Grid Assembly Handling Tool	A4.31
Fig. A4.O	Reactor Tank Showing Arrangement of Lattice and Beryllium Reflector	A4.33
Fig. A4.P	Calibration of Regulating Rod	A4.34
Fig. A4.Q	Sensitivity of Regulating Rod	A4.35
Fig. A4.R	Thermal-neutron Flux in Mid-plane of Active Lattice	A4.41
Fig. A4.S	Thermal-neutron Flux in Top Plane of Active Lattice	A4.42
Fig. A4.T	Vertical Traverse in Hole 45	A4.43
Fig. A4.U	Vertical Traverse in Hole 19	A4.44
Fig. A4.V	Vertical Traverse in Hole 34	A4.45
Fig. A4.W	Neutron Attenuation in Water Above Reactor Lattice	A4.47
Fig. A4.X	Arrangement of Paraffin and Steel Thermal Shield Showing Foil Exposure Slots	A4.52

Fig. A4.Y	Neutron Attenuation in Paraffin Behind Thermal Shield	A4.53
Fig. A4.Z	Horizontal Traverse Between Paraffin and Steel	A4.54
Fig. A4.AA	Vertical Traverse Between Paraffin and Steel	A4.55
Fig. A4.BB	10 cm^3 Graphite Ionization Chamber Used in MTR Mock-Up Heat Production Measurements	A4.56
Fig. A4.CC	Heat Production in Hole 19	A4.58
Fig. A4.DD	Heat Production in Hole 34	A4.59
Fig. A4.EE	Heat Production in Hole 26	A4.60
Fig. A4.FF	Heat Production in Hole 45	A4.61
Fig. A4.GG	Heat Production in Barytes Concrete Block	A4.62
Fig. A4.HH	Vertical Gamma Attenuation in Water — MTR Mock-Up	A4.63
Fig. A4.II	Horizontal Gamma Traverses in Water Above Lattice in MTR Mock-Up	A4.67
Fig. A4.JJ	Chamber Elevations for Horizontal Gamma Traverses and Relative Locations of Graphite, Air, and Concrete in MTR Mock-Up	A4.68
Fig. A6.A	Fuel Rod Production	A6.4
Fig. A7.A	Mass Absorption Coefficients vs. Energy	A7.2
Fig. A7.B	Mass Absorption Coefficients vs. Energy	A7.3
Fig. A7.C	Mass Absorption Coefficients vs. Energy	A7.4
Fig. A7.D	Mass Absorption Coefficients vs. Energy	A7.5
Fig. A7.E	Energy Dependence of Gamma-ray Linear Absorption Coefficients	A7.6
Fig. A8.A	Shielding Formulas	A8.3
Fig. A8.B	Graph — Functions for Shielding Calculation	A8.4
Fig. A8.C	Graph — Functions for Shielding Calculation	A8.5
Fig. A8.D	Graph — Functions for Shielding Calculation	A8.6
Fig. A8.E	Graph — Functions for Shielding Calculation	A8.7
Fig. A8.F	Self-absorption Distance Z of Disk or Cylinder as a Function of Radius C	A8.8

Fig. A9.A	Pneumatic Shuttle Layout	A9.2
Fig. A9.B	Schematic Layout — Pneumatic Shuttle System	A9.3
Fig. A9.C	Shuttle Transfer Layout — Pneumatic Shuttle	A9.6
Fig. A9.D	Single Contact Shock Absorber Pneumatic Shuttles	A9.7
Fig. A9.E	Anticipated Operating Curves	A9.12
Fig. A10.A	Vertical Hydraulic Rabbit Piping Arrangement	A10.2

PREFACE

This Handbook for the Materials Testing Reactor has been put together at the request of the MTR Steering Committee.* It was the feeling of the Committee that the principal purposes for the report should be (1) to give a semidetailed description of the reactor, and (2) to explain, in so far as possible, the reasons for the design. In order to carry out these purposes the Handbook has been divided into a series of chapters and appendixes as follows:

Chapter 1 presents a general description of the reactor and its auxiliaries and an account of the administrative history of the project.

Chapter 2 gives a description of the reactor as it is now being built. While this chapter inevitably gives some of the reasons for the present design, the main background and experiments leading to the MTR are described in Appendixes 1 through 6.

Chapter 3 describes the experimental facilities provided in the reactor. Some facilities that have been proposed and will probably be built later are described in Appendixes 9 and 10.

The various aspects of the physics of the reactor are described in Chapter 4, which leads up to the control of the reactor discussed in Chapter 5. Some general nuclear data are given in Appendixes 7 and 8.

Chapters 6 through 10 are devoted to a description of the necessary auxiliary units to the reactor proper and the reasons for their design.

Extensive bibliographies and lists of reference drawings are given at the end of each chapter so that the reader, if he wishes, may find further details in original reports and memoranda. In addition, it is planned that the Project File, which has been maintained by the Chairman of the Steering Committee, will be transferred to the operating company at the MTR site. This file includes all reports, memoranda, and correspondence dealing with the Project.

*S. McLain, Chairman; M. M. Mann, ORNL, and J. R. Huffman, ANL, members; W. H. Zinn, ANL, and A. M. Weinberg, ORNL, Ex-officio members.

Chapter 1

INTRODUCTION — GENERAL DESCRIPTION AND HISTORY OF THE MTR

1.1 GENERAL DESCRIPTION OF THE REACTOR, ITS LOCATION, AND FACILITIES

1.1.1 Brief General Description of the Materials Testing Reactor. The Materials Testing Reactor as currently (Jan. 1, 1951) being constructed at the Reactor Testing Station (RTS), Arco, Idaho is a high-flux heterogeneous enriched-fuel reactor. The active part of the reactor consists of closely packed vertical-plate assemblies, the individual plates being made of aluminum-clad uranium-aluminum alloy. The plates are spaced to allow water flow between them, the water thus serving as both coolant and moderator.

Immediately surrounding the small enriched lattice is a primary reflector of beryllium metal which is also water cooled. This whole assembly of active lattice and beryllium reflector is mounted in a tank system through which the water flows and which contains the control rods and their bearings. Outside the tank system are a secondary reflector of graphite, a thermal shield, and a biological shield, the whole forming an approximate cube of about 34 ft to a side.

As the name implies, the reactor has been designed primarily to allow the testing of various materials in high-intensity radiation. To accomplish this purpose about one hundred experimental holes have been provided, some going through each of the four walls and top and bottom of the reactor.

Six horizontal beam holes, a through facility, and some rabbit holes allow experiments to be performed within 2 in. of the active lattice. In addition, where the highest possible fast flux is required, spare control rod holes and unused spaces in the active lattice can be utilized if desired.

Six down-beam holes, available from balconies on the north and south faces of the reactor, go to the wall of the tank and "see" the lattice through 2 in. holes in the beryllium. The remainder of the holes, mostly available from the top of the reactor, penetrate into various parts of the graphite zone.

The east wall of the reactor has access to a thermal column which is provided with nine horizontal and two vertical access holes. Depending upon future demands, space is available through the west wall for a shielding facility or another thermal column.

The entire reactor structure is housed in a steel and concrete building approximately 130 ft square with a laboratory building adjoining. Other buildings at the site house water demineralizing and cooling facilities, air pumping and filtering equipment, steam, sewage disposal plants, etc.

The evolution of this reactor from its initial concept to the present design is described in Section 1.2.2.

1.1.2 Location.* The MTR site is located in block 14 of a plot formerly known as the U.S. Naval Proving Ground. This plot, now renamed the Reactor Testing Station, is located in the Snake River Valley plain of southeastern Idaho. The Idaho Office of AEC has established its Central Facilities at the former naval test firing station located approximately 2 miles north of U.S. Route 20. The MTR site is about 4 miles north and slightly west of Central Facilities. Pocatello, the largest town in the area and most likely local supply source, is approximately 70 road miles from the MTR site. The other towns of size in this area are Blackfoot (43 road miles from the site) and Idaho Falls (50 road miles from the site). The total population of this section of Idaho numbers about 68,000.

1.1.3 Availability of Utilities and Supplies. The Reactor Testing Station is linked to the three towns previously mentioned by U.S. Routes 20 and 191. These are both considered all-weather highways. There is also a new road direct from Idaho Falls to the Testing Station. The AEC Central Facilities area is already served by a Union Pacific branch line. A spur line runs to the reactor site. Approximately forty-one motor freight and passenger carriers are certified to operate in this area.

1.1.4 AEC Central Facilities. For the benefit of the MTR and other reactor projects on this station, the AEC has set up Central Facilities on the location formerly occupied by the naval firing station. The items included in this group of facilities are those which are of benefit to all projects on the site. The intent is that Central Facilities can give better and more economical service than if similar smaller facilities were set up at each reactor project site.

It is currently (Jan. 1, 1951) planned that Central Facilities will serve the functions and provide the facilities listed below.

Craft shops. These include carpenter, pipe, sheet metal, electrical, and automotive shops. The shops will be equipped with machines and staffed to do all types of maintenance work and limited alterations.

* Sections 1.1.2 through 1.1.7 contributed by ANL.

Machine shop. A large machine shop is planned to take care of all maintenance, machining, equipment rework, and the bulk of original machine work necessary for the projects on the Reactor Testing Station.

Electronic and instrument shop. This shop is planned to service health physics instruments, radio equipment, alarm system, intercommunication system, etc. This includes all equipment directly under the jurisdiction of the AEC. Servicing of reactor, process, and experimental instruments will be handled by the operating contractor of each particular reactor project.

Stores and supplies. Central Facilities will furnish janitorial and office supplies; standard spare parts such as small motors and pumps; fabrication materials such as lumber, steel, and nonferrous metals; and operating supplies such as fuel oil, gas cylinders, acids, and caustic.

Communications. This will include a central switchboard exchange for long distance calls, teletype service, and mail service from Idaho Falls to the various projects.

Transportation. This will include a motor pool of light and heavy vehicles. Some of the light vehicles will be permanently assigned to projects. All equipment will be maintained at the Central Facilities garage.

Refuse disposal. This will include disposal of radioactive solid and liquid wastes as well as garbage and waste paper.

Road maintenance. This will include all road repairs and snow removal.

Health service. This will include a dispensary and laboratory. A doctor will be in charge full time and will have sufficient equipment for periodic physical examinations.

Health physics. It is currently planned that all project health physics functions will be handled by Central Facilities.

Fire protection. A central fire department is to be provided. To augment this, each site will have one pumper truck with one full-time fireman per shift.

Meteorology. The U. S. Weather Bureau will handle this function.

Photographic and reproduction service.

Security. A central guard and security system exists from which guards will be assigned to each reactor site. Screening and clearing of visitors is carried out at Central Headquarters.

1.1.5 MTR Facilities. Following is a short summary of MTR facilities, all of which are more fully discussed in later sections of this handbook.

Roads and parking lot. A two-lane blacktop road runs from AEC Central Facilities to the MTR site. A parking lot is located outside the west perimeter fence directly adjacent to the main entrance gate. Two-lane blacktop roads provide access to all areas within the site that require vehicle services. A 10-ft-wide patrol road is provided along the inside of the perimeter fence.

Yard facilities. All process piping, sewer lines, fire lines, and electrical distribution lines are located underground. The only exception is the circuit for the perimeter fence lighting system. Fire hydrants and hose houses are placed at strategic locations throughout the site. An electric substation that transforms power from 138 kv to 2400 volts is located on the site.

Safety and security. A security building is located near the main entrance gate. This building will provide guard quarters, a first aid station, space for telephone and radio communications equipment, and quarters for firemen and a fire truck. Additional security is to be provided by means of two personnel control houses; one will be located at the main site entrance and one at the entrance to the exclusion area.

Canteen. A small canteen is provided on the site. Cafeteria type service is provided, with foods that are prepared at Central Facilities.

Steam plant. This building houses three 16,500-lb/hr oil-fired steam generators. The steam enters a 135-psi steam distribution system for site-wide use. This building also contains an emergency Diesel electric generator and the plant and instrument air compressors.

Water supplies and treatment. Two deep wells are located on the site; each one is capable of delivering the normal site demands. Water passes through reservoir tanks and is pumped from there to the Demineralizer Building. Here one portion is demineralized, another chlorinated, and a third softened and chlorinated. The reactor uses demineralized water in a recirculating cooling system. An overhead working reservoir in this loop provides the flow

of water to the reactor. The reactor water is cooled in a flash evaporator system located in the Process Water Building. Cooling water for the evaporators is reused after it is circulated through a cooling tower. The fire loop and canal utilize raw water. The water in general use throughout the site is blended, partially softened, well water. The water used in the cooling-tower system is acid-neutralized well water.

Reactor Building. This building houses the reactor and its control room auxiliaries. It is designed for the use of experimenters. A large amount of open floor space is available on both the ground and basement levels. A 30-ton crane is available for handling shielded coffins, etc. A canal containing 18 ft of water is located at the basement level and extends outside the building. This canal contains the equipment necessary for handling the spent fuel elements from the reactor.

Reactor Building wing. This building is largely a laboratory and shop facility. It has, in addition to the laboratories designed for low-level work, a machine shop, an instrument shop, a staff shop, a small glass shop, men's and women's locker rooms, stores, shipping and receiving rooms, and a counting room. A basement located under the entire first floor contains a battery room, fireproof storage vault, and heating and ventilating equipment for both the Reactor Building and wing building.

Water disposal. Sewage is treated in a sewage-treatment plant located outside the east perimeter fence. Any waters suspected of being radioactive are monitored; if found to be highly active, they are retained in underground tankage. Waters that are only slightly radioactive are discharged to a retention basin which provides both a decay period and dilution. Both the retention basin and the sewage-disposal plant discharge their effluent to a leaching bed located directly east of the southest corner of the perimeter fence.

Hot gas disposal. The reactor-cooling air is discharged to the atmosphere from a 250-ft stack located on the site. Contaminated air from the laboratories is treated for removal of acidic vapors and then discharged into the atmosphere via the same stack.

1.1.6 Climate. The area is semiarid with an average yearly precipitation of about 10.4 in. Precipitation varies from 15 to 20 in. in wet years

to 5 to 10 in. in dry years. Floods are unlikely, as the maximum precipitations ever recorded were 2.6 in. in one month, 2/3 in. in 24 hr, and ½ in. in 1 hr. Snow has fallen in all months except August, but practically none has occurred from June through September. The average yearly snowfall is 35 in. The maximum snowfall in one month was 26 in., and the maximum depth of snow on the ground at one time was 19 in.

At Pocatello the average relative humidity ranges from 53 to 79% in the morning (8:00 A.M.), 26 to 71% at noon, and 24 to 72% in the late afternoon. The higher average relative humidities occur in winter and in the early morning.

Because of the slightly higher elevation of the site area as compared with Pocatello, its situation in the lee of prevailing westerlies, and its distance from the moisture supply represented by the Snake River and its irrigation system, the average wet-bulb temperature at the site is somewhat lower than that of Pocatello, which has a July wet-bulb temperature of approximately 55°.

1.1.7 Geology. The terrain of this area is flat except for the billowy character of the lava and the rather numerous craters and cinder buttes. The relief of the terrain is not more than 5 to 10 ft; the altitude is about 4930 ft above sea level. On both sides of the lava plains, running southwest-northeast, are mountain chains.

1.2 HISTORY OF THE MTR

1.2.1 Need for Reactor. The reactor described in this report is the result of an evolutionary process in the design of a machine conceived for the express purpose of facilitating the conception and design of future reactors for military and peace-time applications. It is of paramount importance that a facility exist which is capable of furnishing quickly a great number of physical, chemical, biological, and engineering data at thermal- and fast-neutron fluxes greater than 10^{14} and high γ-ray intensities, on the basis of which future reactors can be designed within controllable and permissible limits of uncertainty in operating characteristics. The Materials Testing Reactor (MTR) has been designed and will operate for this prime purpose. In addition, there are incorporated features which provide for the following

experimental lines of investigation:

1. Production of sizeable amounts of the fissionable isotope U^{233} for the next stage in the study and utilization of a potentially more plentiful material than U^{235}.

2. Production of sizeable amounts of high-specific-activity radioisotopes which are not recoverable directly from fission products.

3. The acquisition of scientific and engineering experience in design, construction, and operation of an enriched reactor at elevated power levels (30,000 kw) and neutron fluxes ($> 10^{14}$), which is possible for the first time in the MTR.

The preliminary designs for a high-flux enriched reactor, which would produce the U^{233} isotope through conversion of thorium, were begun in 1944 as a consequence of the fear that Pu^{240} would constitute a serious contaminant in the plutonium product from Hanford reactors. It was soon decided that the simplest large-scale converter would be a plate reactor, water moderated and heavy water reflected, with a thorium blanket on the outside. Aside from the reflector, which was subsequently changed to beryllium, the present MTR design largely follows the original design philosophy for the U^{233} production unit with such additional design features as to meet the needs listed above.

1.2.2 Design and Administrative History. Late in 1944 the Chemistry Division at Clinton Laboratories proposed the construction of a 50-kw homogeneous uranium–heavy water reactor whose main use would be to produce easily extractable fission products. Work on a 50-kw homogeneous reactor continued until 1945, when it was decided that the power of the reactor should be raised sufficiently to demonstrate the feasibility of a thermal energy breeder. The power output of such a breeder with a three-year doubling time (of fissionable material produced to fissionable material consumed) is about 10,000 kw.* This was set as the early goal for a homogeneous reactor. The thermal-neutron flux in such a reactor was calculated to be about 2×10^{14} neutrons/cm^2-sec. The reactor was conceived as a prototype homogeneous reactor and thermal breeder; in addition, it would be an experimental tool with a flux greater that that of the Canadian reactor (NRX).

*Doubling time formula is given approximately by $T = 10^6/(P/M)G$, where P = power in kilowatts, M = critical mass in kilograms, G = breeding gain, and T is measured in days.

Considerable advance was made by the theoretical group in the following problems:

1. The dimensioning of control and safety systems.
2. Stability during operation.
3. Temperature, density, and concentration coefficients of the reactor.
4. The effect of a thimble (side hole) on reactivity.
5. Utilization of the leakage neutrons in a thorium rod assembly.

Additional problems arose which led to difficulties in conception of control and technology of a homogeneous reactor. Principally, there was the instability of a homogeneous reactor which contains bubbles of gas arising from the disintegration of solvent molecules and the generation of fission products. While the reduction of power to a 50-kw level would have eliminated the problem of bubbling instability, this would have defeated the purposes of such an enriched reactor, i.e., high-thermal and fast-neutron fluxes and all the advantages which follow from them. Accordingly, the alternative was to go ahead with another type of reactor which would produce similar flux conditions, and use it to study the problems of the homogeneous reactor by small-scale experiments at high flux. A heavy water—moderated and heavy water—cooled enriched *heterogeneous* reactor was first designed.

The critical experiments which were performed as a prelude to the heterogeneous reactor design were carried out in the spring and summer of 1946; they are summarized in Appendixes 1, 2, and 3. These experiments were designed to obtain empirical information on features such as:

1. The critical size of enriched reactors as a function of concentration of fissionable isotope U^{235}.
2. The effectiveness of the heavy water reflector.
3. The temperature coefficient of reactor reactivity.
4. The effectiveness of control rods.
5. The effect of holes such as thimbles in the active region and experimental recesses leading through the reflector.
6. The neutron flux distributions throughout the reactor.
7. The effect of poison (absorber of neutrons).
8. The measurement of the utilization of thermal neutrons in a ring of thorium rods in the heavy water reflector around the active part of the reactor.

The initial set of critical experiments described in Appendix 1 provided invaluable information for future experiments of the same type which would have to be performed prior to or along with designs for major reactors of the enriched class. The essentially primitive features of the experiment consisted in the reactor being hand-loaded and manually controlled. In later critical experiments, which were undertaken when the design of the MTR began to crystallize into permanent form, an excellent opportunity became available to develop and test servo mechanisms for pile operation, particularly, the control of reactors capable of fast periods arising from the considerably increased excess reactivity required of an enriched reactor of the MTR type.

On the basis of theoretical calculations by the Physics Division, the Technical Division of Clinton Laboratories submitted a design proposal in May, 1946 for a high-flux thermal reactor of heterogeneous core, light water—cooled and heavy water—moderated and —reflected, with a ring of thorium rods for U^{233} production. The use of light water as a coolant was believed preferable to the use of heavy water because light water increased the operation flexibility of the machine. A brief description of this proposal is given.

The nuclear fuel, U^{235}, was to be contained in "sandwiches" consisting of a central sheet of aluminum-uranium alloy, clad on both sides with aluminum to confine the fission products and prevent corrosion of fuel elements. These thin sandwiches were to be coiled into spirals having some clearance (water passage) between successive turns of the spiral, and the spirals would be placed in and secured to aluminum tubes of about 2 in. diameter. About thirty such tubes would make a triangular lattice of about 6-in. spacing. The spirals of fuel were to be removed when the isotope enrichment of U^{235} fell to about nine-tenths of the original value. Such "spent" spirals of fuel were to be processed for U^{235} and fission products, and the U^{235}, after the addition of new U^{235}, would be returned for incorporation into a new fuel plate spiral and another cycle through the reactor. The tubes were to be considerably longer than the uranium-bearing spiral which they contained, and they would pass vertically through a cylindrical aluminum tank with their upper ends protruding for connection to the cooling-water supply.

The cooling water would be discharged from the lower end after passing through the spiral passages of the fuel plates. The aluminum tank was to be about 61½ in. high by 69 in. in diameter and filled almost to the top with

heavy water to act as moderator and reflector. Piercing the tank vertically outside the uranium lattice would be a circle of tubes similar to the fuel tubes to contain thorium for production of U^{233} by capture of leakage neutrons. The fuel required was estimated at 3 kg of U^{235}, and, at a maximum total power of 30,000 kw, the consumption of the fissionable isotope U^{235} would be about 30 g per day. The thermal-neutron flux would be about 2×10^{14}, and the fast or virgin flux would be about 1.5×10^{13}.

Upon critical examination of the above design, it was pointed out by Prof. Eugene Wigner that an important gain in fast flux could be obtained by using light water for both coolant and moderator. This change would result in a smaller reactor, and, because fast (virgin) flux is proportional to power per unit volume, a 30,000-kw reactor of the proposed type could produce a fast flux of approximately 1×10^{14} and a thermal flux about equal (2×10^{14}) to that of the previous design. This could be accomplished by fabricating the uranium-aluminum alloy into flat aluminum-clad fuel plates, and then putting the plates close together. In this way, a fuel unit would assume the shape of a long rectangular pipe with the parallel fuel plates brazed into two opposite sides. A rectangular fuel unit has considerable structural advantages in assembly of a core, allowing for close arrangement and hence smaller volume. In addition, a further volume decrease is gained with light water moderation.

Actually, in the previous design with heavy water moderation and reflection, the reflector merely provided space for experiments that could be realized otherwise. In August, 1946 it was therefore decided to eliminate heavy water altogether, decrease the core volume by arranging flat fuel plates with close spacing in a rectangular array to be light water—cooled and —moderated, and to make the reflector out of beryllium. The decision with respect to beryllium was made possible by the rapidly improving situation in 1946 in the metallurgical techniques of handling and fabricating this metal on a production basis of tons rather than pounds.

Beryllium is more effective than heavy water as a reflector; it has good corrosion resistance, it can withstand radiation damage more effectively than graphite, and, like heavy water, it supplies additional neutrons by virtue of the γ-ray neutron (γ,n) reaction in which neutrons are emitted by beryllium under the γ-ray irradiation. [The (γ,n) threshold in beryllium is approximately 1.7 Mev.]

Simultaneously, the Technical Division commenced redesign of the basic reactor and its auxiliaries.[1,2] The design and fabrication of the multiplate fuel assembly and of the beryllium reflector assembly were two of the most difficult problems which arose.

Thus, by the summer of 1946, the design for the experimental high-flux reactor had evolved from an initially homogeneous-fluid reactor to an all-metallic rigid machine aside from the cooling fluid (ordinary water).

The use of light water moderation and cooling with beryllium reflection initiated an intensive theoretical analysis on the part of the Theoretical Group of the Physics Division at Clinton Laboratories, of the expected characteristics of such an enriched reactor. At the same time, the program of critical experiments was expanded considerably in scope and facilities to provide experimental information and check on theory both as to basic principles and detailed conclusions. The experiments are described in Appendix 2.

While the critical experiments were going on, the AEC assigned the Kellex Corporation to work on the high-flux reactor early in 1947 as design contractor. Monsanto Chemical Company, the contractor for operation of Clinton Laboratories, was to be the construction manager. Design work continued throughout 1947 under this contractural arrangement so that by the fall of 1947 the design was very well advanced.

Between November, 1947 and January, 1948 certain administrative decisions were made which changed plans for construction of the MTR or High Flux Reactor at Clinton Laboratories. The Kellex Corporation was withdrawn as design contractor in November, 1947. On December 27, 1947 the AEC announced a decision to centralize reactor development at Argonne National Laboratory (ANL). This included responsibility for the High Flux Reactor. It was also announced that Monsanto Chemical Company would terminate its direction of Clinton Laboratories and that the Carbide and Carbon Chemicals Division of the Union Carbide and Carbon Corporation would assume direction early in 1948. The name of the laboratory was officially changed to Oak Ridge National Laboratory (ORNL).

Work on the High Flux Reactor continued at ORNL during early 1948, and also at ANL toward the latter part of 1948. Further critical experiments for the verification of design choices and the design and construction of the High Flux Reactor mock-up were carried on at ORNL. The critical experiments

were directed toward the study of the characteristics of small enriched reactors which simulated the structure of the proposed High Flux Reactor. These experiments were performed to confirm several of the results derived from theoretical considerations (MonP-272) and also to obtain empirical knowledge of certain features of the High Flux Reactor which were not readily calculable because of complications of geometry or composition.

The site of the reactor was at the time left in some doubt. Although a site near Chicago was considered, the opinion of the Reactor Safeguard Committee was that a reactor of this power level ought not to be placed near a large city. Since at this time the Idaho Reactor Proving Grounds was in the process of being established, it was decided to locate the MTR at this site.

It was recognized further by the AEC that the problems of radiation effects in materials of construction were among those foremost in the field of reactor development. Shortly after a meeting presided over by George Weil at ANL in October, 1948, at which the projected radiation-damage experimental needs were reviewed, it was decided to proceed with completion of design and construction of the High Flux Reactor. In recognition of one of its prime purposes, the machine, which for a short time had been called the Reactor Development Reactor, was renamed the Materials Testing Reactor (MTR).

Thus in November, 1948 a directive was issued to ANL to proceed with the project. It was further directed that ANL and ORNL form a working partnership for this project in order that advantage might be taken of the facilities and experience at ORNL peculiar to this reactor.

In accordance with the directive, the managements of the two laboratories organized a Steering Committee for the project. The Committee consisted of the following people. Dr. Stuart McLain, Chairman; Dr. J. R. Huffman, ANL, to supervise project work at ANL; Dr. M. M. Mann, ORNL, to supervise project work at ORNL. Dr. W. H. Zinn and Dr. A. M. Weinberg, acted as ex-officio members and to guide the Committee to solutions of many difficult problems.

The Committee was authorized[1] by ANL and ORNL to discharge the following responsibilities:

1. To organize the efforts of ANL and ORNL in completing the design of the MTR, its immediate associated facilities, including the building and site plans, and carrying out all development work and tests necessary.

2. To negotiate a contract or contracts for the engineering design and construction of the reactor and its facilities as described above.

3. To transmit information and specifications to the contractor or contractors.

4. To approve all final drawings and materials and construction specifications submitted by the contractor or contractors.

5. To negotiate for the procurement of special materials obtained through the AEC or its agencies and to approve the specifications for these materials.

6. To inspect the construction of the reactor and its facilities and suggest and approve any necessary changes in collaboration with the design contractors.

7. To supervise the writing of the design and operating manuals.

8. To supervise the initial tests and operation of the reactor and authorize any necessary changes.

9. To test and accept the final plant from the contractor or contractors in respect to its functional and operational adequacy.

At the time the Steering Committee was organized no AEC operations office had been formed for the Reactor Testing Station and a site had not been selected. The Committee was therefore the only group in existence which was qualified to prosecute and/or procure pertinent information for the AEC relative to the items listed above. Subsequently the Idaho Operations Office (IDO) assumed responsibility for either all or portions of items 2, 3, 6, and 8.

Meanwhile, the Committee apportioned the technical work of the project between ANL and ORNL in the following manner: ORNL was assigned responsibility for the reactor structure, including the reactor proper, the beryllium reflector, the reactor tanks, the graphite reflector, the thermal shield, the concrete shield, and major items contained therein. ANL was assigned the reactor cooling-water and cooling-air systems, some experimental facilities within the reactor, the reactor building, and all supporting facilities and buildings on the MTR site.

In order to minimize difficulties of overlapping responsibility, specific assignments in merging areas were made as follows:[4]

1. Experimental hole plugs (except the 3- by 3-in. vertical facility) and coffins would be designed by ANL. The experimental hole liners would be designed by ORNL.

2. The experimental shielding facility would be designed by ORNL.

3. ORNL would design channels for the pneumatic rabbits. ANL would carry out the experimental work and design of propulsion equipment. On the hydraulic rabbits, ORNL would design the channels, propulsion equipment, and the conduits to the small canal. ANL would design handling equipment beyond this point.

4. The nominal diameter of the experimental holes given on DRP-64 would be used for the inside diameter of the liner.

5. Spectrometer and slurry experiment facilities in the reactor structure would be designed by ORNL.

6. ANL would design the hot-materials-handling equipment in the basement.

7. Reactor control instruments would be designed by ORNL. The control instruments for the water, steam, and air systems would be designed by ANL.

8. Electrical layout for power, conduits, cables, etc. outside the reactor structure would be designed by ANL. ORNL would specify special power requirements for reactor control.

9. The discharge chute to the canal would be designed by ORNL. All handling equipment in the canal would be ANL's responsibility.

Subsequently, upon request by ANL, ORNL assumed responsibility under item 1 for all plugs except for those facilities containing radiation doors (all HB and DB holes). Furthermore, since the HB and DB plugs essentially determine the liner requirements, it was decided that ANL would specify the liners as well as the plugs for these holes.

The stage was then set for the design contractor, and the Committee expended considerable time and effort during the late winter and spring of 1949 in gathering information relative to a large number of engineering concerns and their capacities and abilities. This information was transmitted to the AEC with recommendations. In the late spring of 1949 the IDO was organized, and IDO assumed the task of contract negotiation.

The Chemical Plants Division of the Blaw-Knox Construction Company was selected as architect-engineer for the MTR in July, 1949, and early in August, 1949 the Committee initiated formal contact and transmission of information to this concern so that engineering design could begin.

The fall of 1949 was spent in the usual opening stages of generalized project planning, preparation of preliminary flow diagrams, and elucidation of special phases of the work for the benefit of the design contractor. Blaw-Knox sent a number of its people to Oak Ridge for periods of a few days to several months to work with ORNL personnel, particularly those in the reactor-control and mechanical-design groups. Blaw-Knox personnel also paid frequent visits to ANL to establish the fundamental design data for ANL's sections of the project.

During this period, the hydraulic and mechanical experiments on the full-scale model (mock-up) of the reactors* at Oak Ridge were drawing to a close, and preparations were underway for a series of critical experiments in this facility.

It appeared proper then to consider the question of detailed design of the reactor proper. ORNL had prepared detailed drawings for and had negotiated and supervised the construction of the mock-up reactor. Furthermore, the details of the reactor tanks and components were essentially "frozen" and subject to changes attendant only to experimental findings from the mock-up experiments or to improvements in materials.

Upon consideration of these facts by the parties concerned (Steering Committee, IDO, ORNL, and Blaw-Knox), it was suggested that ORNL assume the responsibility for design and procurement of the reactor tank sections B, C, and D, the internal components,** and the top and bottom plugs. Tank sections A and E, being fixed permanently in the concrete structure, were considered as part of that structure and consequently remained with Blaw-Knox for detailed engineering.

IDO then issued a formal request to Oak Ridge Operations (ORO) in February, 1950 that ORNL be authorized to carry out this work, and approval was granted early in March, 1950.

Special problems of design and procurement arose next in the field of reactor control instruments. It was first decided that pilot models of these instruments and associated circuitry would be supplied by ORNL. However, early in 1950, in the interest of saving time, ORNL agreed to supply the full complement of special reactor-control instruments and associated circuits (see Controls, Chap. 5).

*See description of mock-up and its purposes in Appendix 4.
**See detailed description of reactor in Chap. 2.

In early 1949 the situation with regard to beryllium technology and procurement had reached a stage such that the Steering Committee felt it advisable to solicit the services of an experienced and ranking metallurgist to coordinate the necessary experimental development and procurement program, and to ensure that the MTR receive acceptable material on schedule. Although beryllium metallurgy had undergone marked progress during the later stages of the war and the years following, a dependable supply of high-grade metal was not yet completely assured, and the techniques of fabrication of complex shapes had not been demonstrated on a production scale.

The Committee was fortunate in obtaining the services of Prof. J. L. Gregg of Cornell University as consultant to ORNL and Metallurgical Coordinator for the MTR; it was due primarily to the efforts of Prof. Gregg that the Committee was able to decide in the early summer of 1949 that hot-pressed (sintered) beryllium could be used for the MTR reflector. The choice of hot-pressed as opposed to extruded material allowed a major simplification of reflector components with attendant reduction of fabrication problems (see Chap. 2).

Another problem of special material also confronted the Steering Committee during 1949, namely, that of graphite for the secondary reflector and thermal column. Techniques of graphite purification had improved considerably in the few years following the war, and ANL was assigned the task of gathering pertinent data and specifications for the various grades of graphite available. Their study resulted in the decision of the Committee to use GBF graphite for the thermal column and that portion of the permanent graphite in front of the thermal column because of its very low induced activity and relatively large diffusion length, these properties being of distinct advantage to experimenters using thermal columns.

It was mentioned above that critical experiments had been planned for the mock-up in Oak Ridge. Preparations for these experiments occupied the fall of 1949, and in January, 1950 this full-scale model of the MTR was brought to criticality. During the spring, summer, and early fall of 1950 this reactor was operated hundreds of times at power levels of a few hundred watts, and many measurements of vital importance to the MTR were made. As an example, it was on the basis of these measurements that the final design details of the graphite and thermal shield were evolved and the overall design of these items was finally approved.

In February, 1950 the Fluor Corporation, Ltd. of Los Angeles, California was appointed by IDO as construction contractor for the MTR, and the first formal contact between IDO, Fluor, Blaw-Knox, and the Steering Committee was made in March, 1950. Up to July 20, 1950 the Steering Committee approved all design and construction drawings before issuance, but after this date, in order to expedite construction, a major portion of this control authority was relinquished.[5] From July 20, 1950 the Steering Committee acted as consultants to IDO, Blaw-Knox, and Fluor, except that the responsibility for the conceptual design process and functional layouts remained with the Committee.

Ground was finally broken for the MTR in May, 1950. As of Jan. 1, 1951 the Reactor Building steel structure was completed and the side walls were being erected. Concrete had been poured for the sub-pile room ceiling, and preparations were being made to set tank section E. Completion of all construction is scheduled for Oct. 1, 1951.

1.3 REFERENCE REPORTS

(1) Leverett, M. C. and Huffman, J. R., *Process Design Information 1000 Project - General and 1100 Area*, MonN-262, March 4, 1947.

(2) Huffman, J. R., *et al.*, *Feasibility Report on Clinton High Flux Pile*, MonT-433, December 1, 1947.

(3) McLain, S., *Minutes of First Steering Committee Meeting*, ORNL CF-48-12-83, December 2, 1948.

(4) McLain, S., *Minutes of Fourteenth Steering Committee Meeting*, ANL-SM-26, June 1, 1949.

(5) Jones, W. W., *Blaw-Knox Conference Notes No. 75*, July 7, 1950.

(6) Winkleblack, R. K., *Site Survey Study*, ANL-SM-20, April 12, 1949.

(7) Smith, Hinchman, and Grylls, Inc., *Survey Report - Fort Peck, Montana; Pocatello, Idaho Sites*, March 26, 1949.

(8) Leyse, C. F., *Meteorological Conditions at the Reactor Test Site*, ANL-EKF-54, May 10, 1950.

1.4 REFERENCE DRAWING

(Blaw-Knox Construction Company Drawing)

DWG. NO.	TITLE
BKC-3150-801-50	Yard, Key Plan

Chapter 2

ENGINEERING DESCRIPTION OF THE REACTOR

In this chapter of the handbook an attempt will be made to describe the structure and function of all the parts of the reactor enclosed within and including the biological shield. Since this is not a construction manual, details not required to explain the functions of any part will be omitted. Such details can be obtained from the reference drawings and reports listed at the end of this chapter.

The general design of the reactor is shown in Figs. 2.A, B, C, and D*, which are a north-south vertical section, an east-west vertical section, a horizontal section, and a pictorial cross-section, respectively. Overall dimensions are given in Fig. 2.A, but it should be noted that in all construction drawings the horizontal centerline of the reactor (i.e., the centerline of experimental holes HB-2 and HB-5 of Fig. 2.A) is arbitrarily taken as elevation 100 ft. On this basis the first floor is at elevation 96 ft 6 in. and the top of the reactor is at elevation 120 ft 6 in.

It will be seen from these general drawings that the reactor is divided into four main sections:

1. The tank system containing the active lattice and beryllium reflector, both of which are water cooled.
2. The graphite reflector, consisting of a replaceable pebble zone and a permanent block graphite zone, both air cooled.
3. The thermal shield which forms a heavy iron box around the reactor, except where the tank sections extend through it.
4. The biological shield.

The various experimental facilities and the canal will be discussed in Chaps. 3 and 6, respectively.

2.1 REACTOR ENCLOSURE TANK

Tank Sections A, B, C, D, and E

The general tank system, approximately 30 ft tall, is shown in Figs. 2.A and B while the details of the construction, gasketing, etc. are shown in

*For convenience in reading Figs. 2.A through 2.F are placed at the end of the chapter.

Fig. 2.E. The tanks provide the means of funneling water through the active lattice and beryllium and provide supports for the active lattice, the reflector, and the control rod bearings. They are bolted together and by the use of aluminum gaskets are made into a watertight system. The design of the gaskets and torque required on the flange bolts have been tested at ORNL in a full-size mock-up test.*

2.1.1 Tank Sections A and E. Both of these tank sections[1] are made of stainless steel and are to be permanently embedded in the concrete of the biological shield. However, they are initially supported independently of the concrete on a structural steel frame.[2] The bottom of this frame is shown under tank section E in Fig. 2.B and the vertical members are shown just outside the thermal shield in Fig. 2.C. Both tank sections are to be welded to this frame before the concrete is poured.

Tank section E is required in the structure both to act as a water exit under the active lattice and to provide space for the control rod extensions. For ease of construction and smooth water flow, it is made the same diameter as tank section D.

Tank section A serves two purposes: (1) as an entrance for the cooling water stream, and (2) as a container for the radiation shield (water) used during shutdown operations. During shutdown approximately 17 ft of water will be required as a cover for the active lattice. Tank section A is built with water inlets and overflow lines near the top to fulfill this requirement. It will also be noted that tank section A is large enough in diameter to permit tank sections B, C, and D to be put in or lifted out through it. This provides for mounting the lighter tank sections B, C, and D after tank sections A and E have been finally set, and, in case of damage, permits replacement of these tanks.

The proper operation of the control rods depends upon the alignment of the tank sections, and it is essential that the top flange of tank section E be set accurately horizontal and that tank section A and all the beam holes in the concrete be aligned accurately to this flange.

2.1.2 Tank Section B. Tank section B is a bellows type expansion joint made up of two convolutions of thin stainless steel welded to stainless steel

*MTR Flange Mock-Up Test, ORNL memo, to be issued.

flanges for attachment to tank sections A and C. This permits free thermal expansion and contraction of the tank sections without applying excessive stress to the structural setup. Removal of this section permits filling of the pebble zone.

2.1.2 Tank Sections C and D. These tank sections are essentially one in function but are split for ease in manufacturing. The split between C and D is so dimensioned that the support castings for the active lattice can be mounted conveniently. These sections are hollow aluminum cylinders of 1 in. wall thickness and 54¼ in. I.D. The diameter was determined by the active lattice and beryllium reflector requirements. The wall thickness was determined by the strength required to sustain the water pressure and the weight of the support castings, but it is made as thin as possible, consistent with these requirements, so that the neutron absorption will not be too great. In general the tank has a 1-in.-thick wall except for a 1-ft band around the center where the wall is 1¼ in. thick.

Tank section D is pierced by several holes to provide experimental facilities close to the active lattice. Most of these, for the six HB thimbles, are at the centerline of the lattice and pierce the thick section of the tank wall. These six thimbles are extruded aluminum tubes of 6 in. I.D. and 5/16 in. wall, sealed at the end adjacent to the lattice by a 7/8-in.-thick aluminum plate set parallel to the lattice face. They are welded into the tank wall in position to receive the ends of the HB liners. As described in Section 2.4.1, the beryllium reflector is machined to fit around these thimbles with sufficient clearance for proper flow of cooling water (see also Section 2.7.1).

In addition to the thimble holes, tank section D is pierced by the aluminum bar containing the HR-1 and HR-2 pneumatic rabbit holes and by the HT-1 facility. The aluminum bar containing the rabbit holes is shown in Figs. 2.D and 2.4.A. It reaches to the bottom of the reflector merely to simplify the beryllium machining and stacking. The rabbit holes themselves pass just under the extension of HG-9 and within 1 in. of the east face of the active lattice.

The HT-1 facility through the tank is a square aluminum tube with approximately 4¾ in. inside dimensions and ½-in.-thick walls. It runs just under the beam holes close to the west face of the active lattice, as shown in Fig. 2.D.

Alongside the lattice the inner wall is extended down to the bottom of the reflector to facilitate the packing of the beryllium. Both the bar containing HR-1 and HR-2 and HT-1 tube are welded into tank section D, keeping this a watertight unit.

In order to give support to the inner ends of the DB, HR-3, HR-4, HG-5, HG-6, and HG-9 liners, sockets are welded onto tank section D at appropriate places. Some of these are shown in Fig. 2.D.

2.1.4 Top and Bottom Plugs. The top and bottom plugs complete the watertight shell around the active lattice and form part of the support system for the control rods.

The bottom plug, shown in Fig. 2.E , is a hollow stainless steel shell filled with lead shot to complete the shielding requirements under the reactor. Its total weight is approximately 6 tons, and, while it can be removed, only the direst necessity would justify such a step. Through the bottom plug pass the discharge chute, hydraulic rabbit tubes, and the monitor tubes (see later sections for description of these). This plug also supports the shim-rod lower shock absorbers (see Section 2.3.3).

The top plug (see Fig. 2.F) serves not only as the upper tank closure but also as the primary support for the control rods and their drive mechanisms. Like the bottom plug, it is a hollow stainless steel shell partially filled with lead shot to fulfill shielding requirements. On this plug is mounted a platform which supports the control motors, limit switches, etc. for the control rods. Underneath the top plug on four supports hangs the spider which holds the bearings for the 12 control rods (see Section 2.2).

Since the top plug must be taken off in order to replace fuel elements or control rods, it is designed to be easily lifted by the overhead crane and lowered to a "dry dock" on the first floor.

2.2 THE ACTIVE LATTICE AND SUPPORTING STRUCTURE

The fuel for the reactor will be 95.3% enriched uranium alloyed with aluminum and made up into aluminum-clad plates 0.060 in. thick.* Because of

*A brief description of the development and manufacturing process of the fuel plates and assemblies is given in Appendix 6.

the picture-frame type of construction used, no uranium is exposed to the cooling water. Eighteen of these plates, each approximately 2.8 in. wide and 24-5/8 in. long, will be made into a single fuel assembly. The plates, with a 0.118-in. space between them, are brazed into aluminum side plates, and the assembly is then equipped with aluminum end boxes. A cross-section of the assembly is shown in Fig. 2.2.A, and a picture of a completed fuel piece is shown in Fig. 2.2.B.

Referring to Fig. 2.2.B, the bottom end of the fuel assembly is seen near the lower right-hand side of the picture. Both end boxes are, of course, open to allow water to pass freely through the assembly from top to bottom.

Each of the fuel assemblies contains approximately 140 g of U^{235}, and it is expected that the MTR will contain about 23 of these units when in full operation. The arrangement of these units into a lattice and their supporting structure can best be seen by referring to Figs. 2.D and E.

Referring to Fig. 2.D., it will be seen that the end boxes of the fuel assembly fit into the upper and lower assembly grids. The spring section of the upper end box (see Fig. 2.2.B) allows each assembly to be held firmly and still allows for expansion and tolerance limitations. The eight square holes in the upper assembly grid are for the shim-safety rods which extend all the way through the reactor.

The actual assembly of all these parts is best seen in Figs. 2.D and E. The lower support casting, which is bolted to tank section D, supports the lower assembly grid and the lower bearing grid. The upper support casting, which rests on an extension from the upper flange of tank section D, supports a removable assembly of the upper assembly grid, the grid spacer, and the upper bearing grid. This assembly can be locked in place or lifted as a unit by the upper locking mechanism.

A further set of control-rod guide bearings, mounted in the spider, is fastened to the top plug by four long support tubes. When the top plug is lowered, the four corners of the spider fit over pins on the spider support ring, which then holds the spider in the correct position. In order to allow for machining tolerances and slight errors in lowering the top plug, the spider is actually hung on the support rods by rather light springs. In this way, while the bearings and spider are attached to the top plug, they are

DWG. #10388

[redacted]

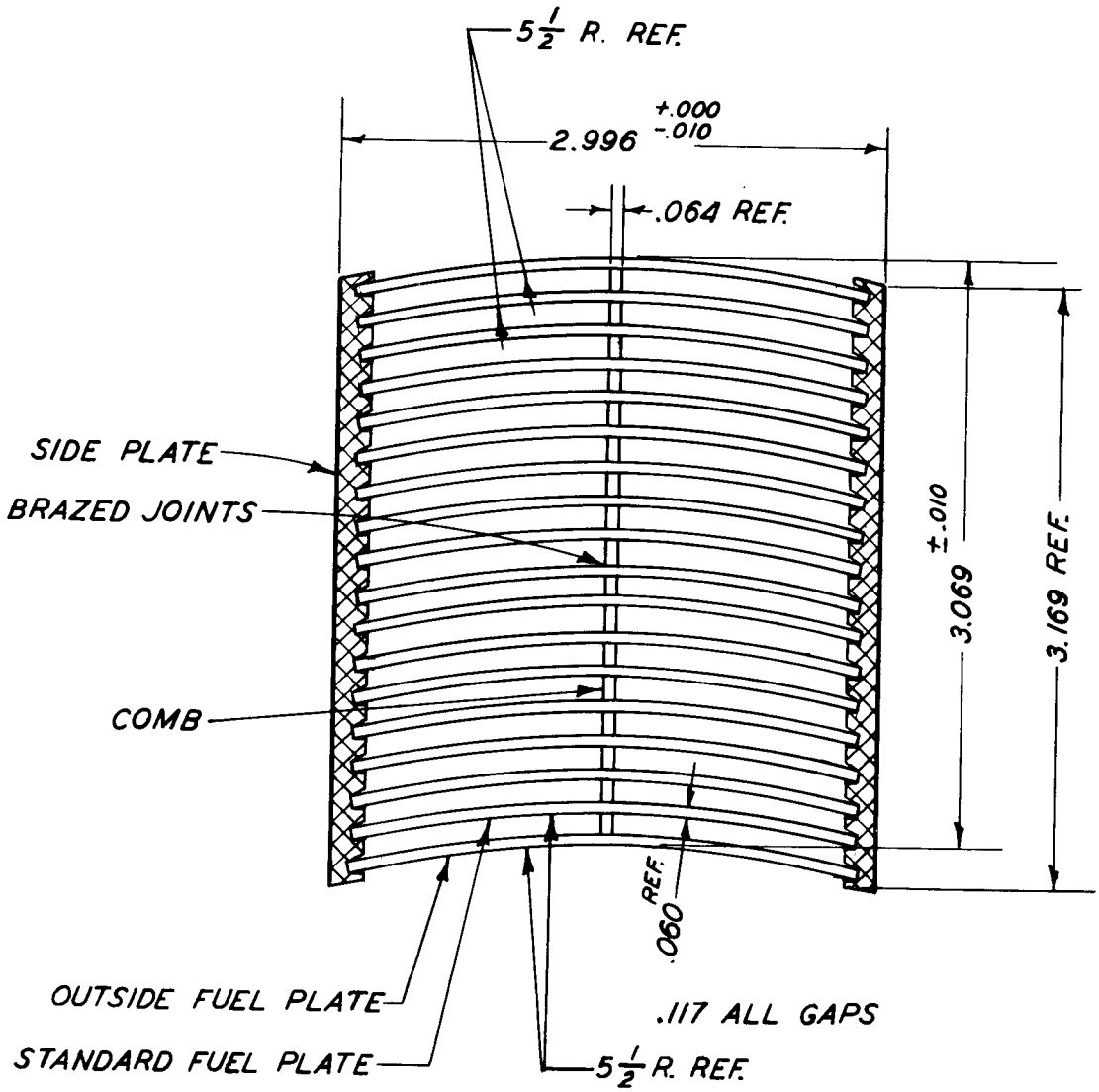

FIG. 2.2.A

M.T.R

CROSS SECTION OF FUEL ASSEMBLY

OAK RIDGE NATIONAL LABORATORY

[redacted]

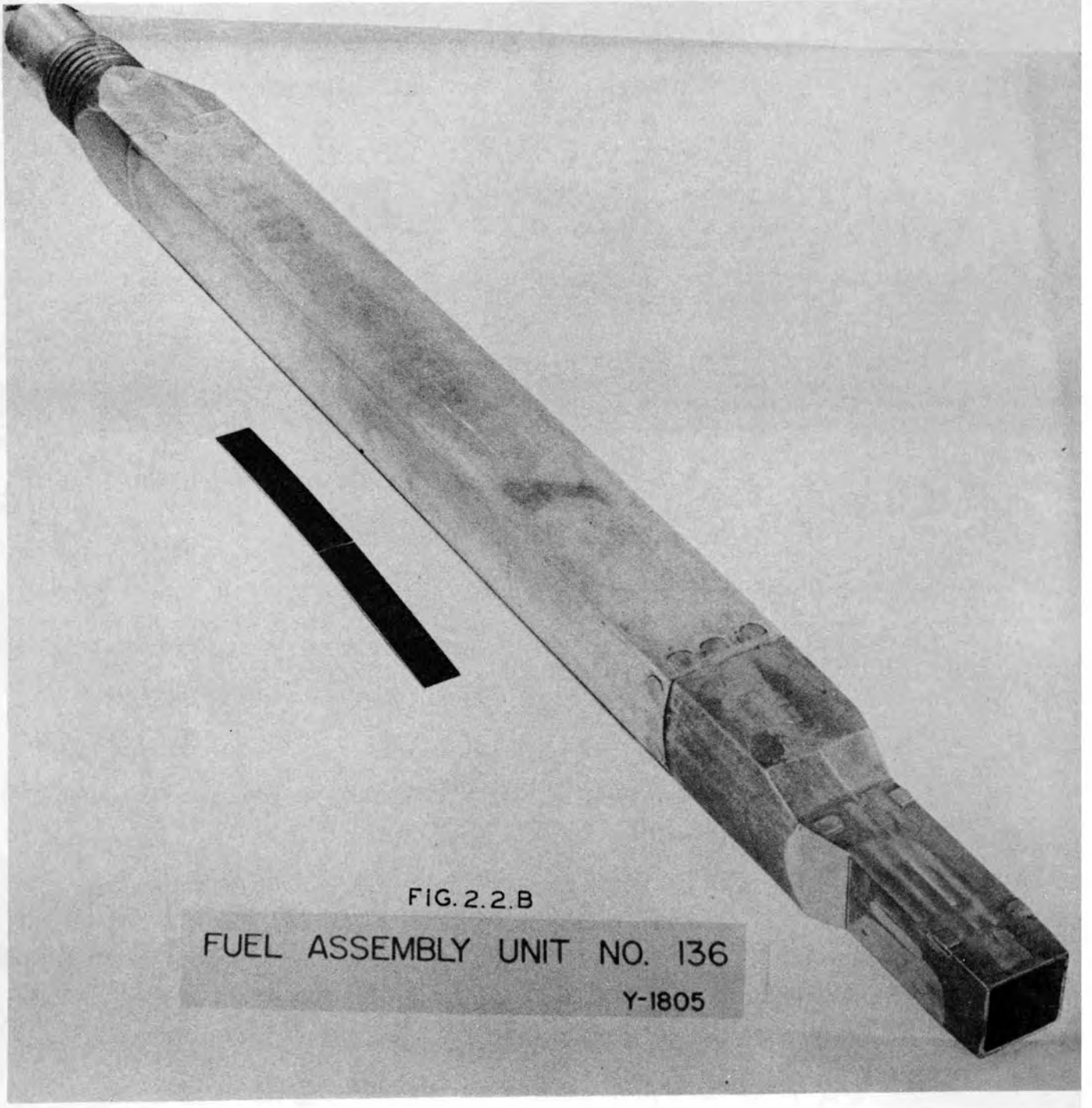

FIG. 2.2.B

FUEL ASSEMBLY UNIT NO. 136

Y-1805

CLASSIFICATION CANCELLED
DATE 5-16-55
For The Atomic Energy Commission
William A. Johnson
Chief, Declassification Branch

aligned by the rigid spider support ring which is bolted to the top flange of tank section B.

In initial assembly, since the control rods must operate freely, it is essential that the lower shock absorbers mounted on the bottom plug and all bearings in the various grids line up accurately. The lower shock absorbers are adjustable as a group, and the final doweling of the support grids and top plug will not be made until the system is assembled. It is now planned to assemble and fit tank section D, the upper and lower support castings, and the internal parts of this tank section at ORNL before shipment to Arco. Final adjustment of the shock absorbers and the doweling of the top plug will then be done in Idaho.

Once the system is aligned, fuel is loaded by means of special handling tools in the following manner: With the top plug off, the upper grid assembly is lifted from the upper support casting and placed on a special support rack mounted on the spider support ring. The shim-safety rods are then placed in position, being supported by the lower grids and the shock absorbers. Finally, the fuel assemblies are lowered into the lower assembly grid one at a time (with due regard to criticality, of course). When enough fuel is loaded, empty spaces in the lattice are filled with beryllium pieces ("L" pieces) of the same shape and size as the fuel elements. When this operation is completed, the upper grid assembly is lowered over the top end boxes and clamped down, the control rods at the same time extending through the upper bearing grid. The top plug, now holding the upper halves of the control rods extending through the spider, is then lowered and bolted down.

Present plans call for a narrow slab loading, nine assemblies long by three wide. The assembly grids allow 45 places (including shim-safety rods) with the long side of the grids oriented in the east-west line. The lattice is to be initially loaded on the north side, thus putting one row of four shim-safety rods in the central line of fuel assemblies. In keeping with this plan, it will be noted that HG-9 is placed off-center as far as the structure is concerned but will "look" at the center of the loaded lattice. In this arrangement experimental holes HB-1, 2, and 3 and DB-1, 2, and 3 will receive a higher fast flux than the holes on the opposite side which "see" the lattice through two additional rows of beryllium.

Unloading of the reactor is accomplished by essentially the reverse of the above procedure for loading, but, if the reactor has been operated for some time, the fuel elements will be too hot to lift out through the top. In this case they must be lowered through the discharge chute into the canal. An outline of the procedure is as follows: With the shim rods and regulator rods disconnected and resting in their lowest position, the top plug is unbolted, lifted, and carried by the crane to the "dry dock." The upper grid assembly is then lifted from its support casting and placed on the support rack on the spider ring. Before any fuel elements are lifted, the beryllium pieces D-1 and D-2 (see Fig. 2.4.A) are lifted and placed to one side of tank section D. Then the discharge chute plug is lifted, leaving the discharge chute clear to the receiver cylinder in the canal. A fuel assembly or control rod may then be raised clear of the active lattice, moved sideways to the discharge chute, and lowered to the receiver cylinder in the canal. Removal from the receiver into the canal is fully described in Chap. 4.

2.3 THE CONTROL RODS

The MTR control rods are of two main classes, the shim-safety rods and the regulating rods. All of them are designed to lower the reactivity of the reactor when they are inserted, and when fully in, i.e., resting in their shock absorbers, they will overcome an excess reactivity of greater than 40%. It will be shown in Chap. 6 that it is necessary to have approximately 19% excess reactivity built into the reactor; hence the control rods provide an adequate margin of safety.

2.3.1 Shim-safety Control Rods. The shim-safety control rods, as their name implies, serve the purpose of providing both regulation and safety control. It has already been noted that there are places for eight shim-safety rods running through the active lattice. At present it is planned to use two types of rods. Four of them will be constructed to bring fuel sections, each containing 14 fuel plates, into the lattice as they are raised and will be used in the four positions in the middle of the fuel slab. The remaining four will have beryllium in the lower section since they are in the beryllium section of the lattice grid. All eight have cadmium sheet in the upper section, and this section will reside in the lattice when the rods rest in the lower shock absorbers.

The two types of shim-safety rods are shown in Figs. 2.3.A and B. As experience is gained with the reactor, the fuel or beryllium sections of four or five of the rods may be replaced with thorium for production of U^{233}.

The rods as shown extend from the shock absorbers up through the upper bearing grid. They are raised from this position by means of an electromagnet on the bottom of the lifting shaft, which extends through the top plug to the motor drive mechanism. This magnetic clutch provides the "scram" or safety feature of the rods. Its operation will be described fully in Chap. 5. It will be noted that the armature section at the top of the safety rods contains a spring which acts like a universal joint so as to aid proper seating of the magnet onto the top of the rod.

Under normal operation the shim-safety rods are driven by means of the magnetic clutch and vertical lifting shaft by reversible three-phase induction motors and worm drives (see Fig. 2.F). The motors are remotely controlled by reversing contactors, suitably interlocked and having the usual complement of upper and lower limit switches. The advantage of the induction motor is that no accident can make it run in excess of synchronous speed; therefore, the danger of over-speed withdrawal of the shim-safety rods is eliminated. No brake is required since the worm and screw drive is self-locking.

Pertinent data on the shim-safety rods are summarized in Table 2.3.A.

TABLE 2.3.A

Cadmium-Uranium Shim Rod

Weight of rod	110 lb
Weight of magnetic clutch	~ 40 lb
Weight of drive shaft	35 lb
Total weight of rod, shaft, and clutch	185 lb
Water pressure load on rod, assuming approximately 40 lb/in.^{2}	290 lb
Drive motor power	1/6 hp
Drive motor speed	1725 rpm
Water flow area (upper section)	5.06 sq in. (32.6 sq cm)
Water flow area (uranium section)	4.[illegible] sq in. (26.1 sq cm)
Water flow area (lower section)	5.06 sq in. (32.6 sq cm)
Water flow area (cadmium section)	5.04 sq in. (32.4 sq cm)

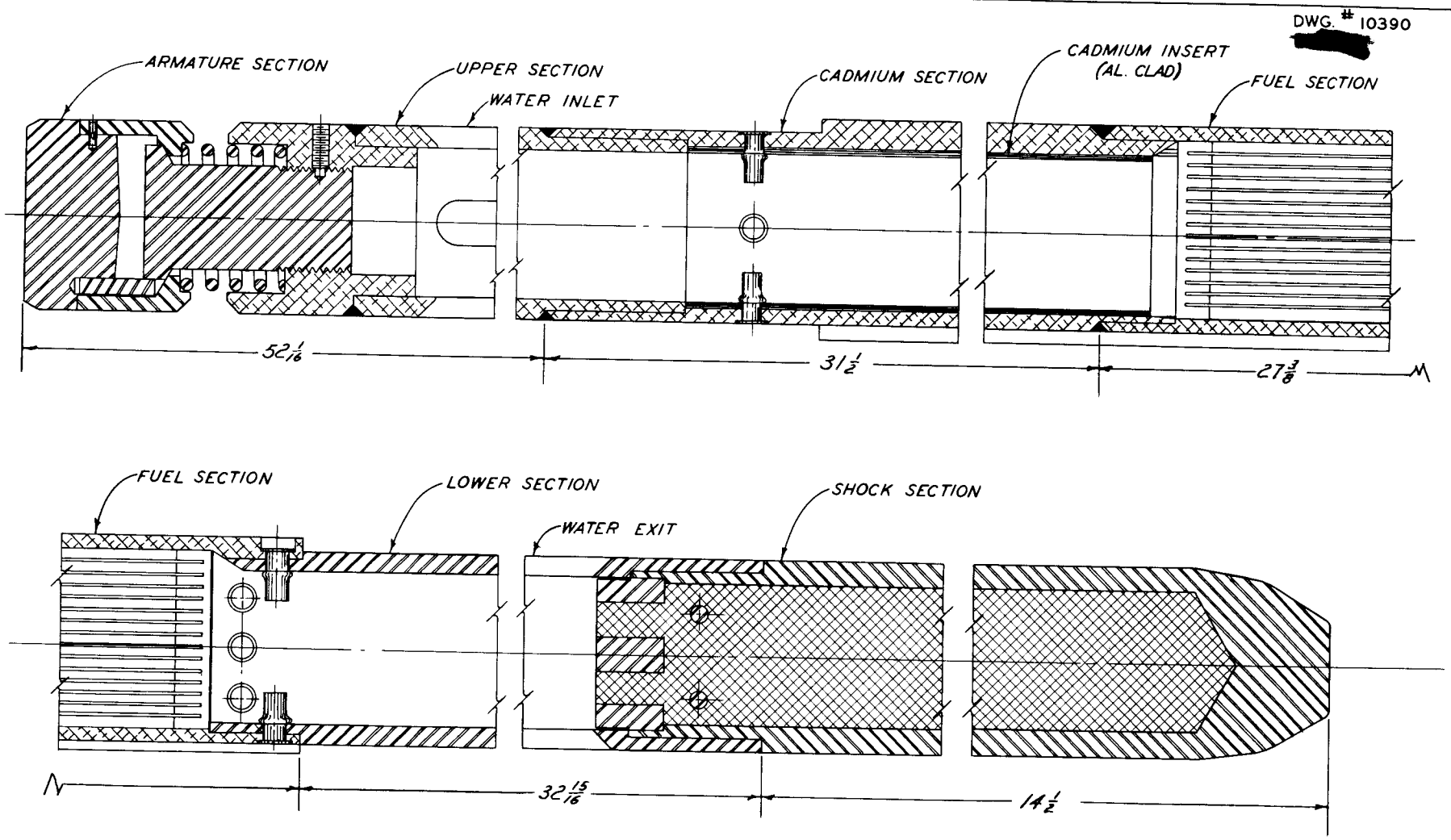

FIG. 2.3.A
M.T.R
SHIM-SAFETY ROD WITH FUEL

OAK RIDGE NATIONAL LABORATORY

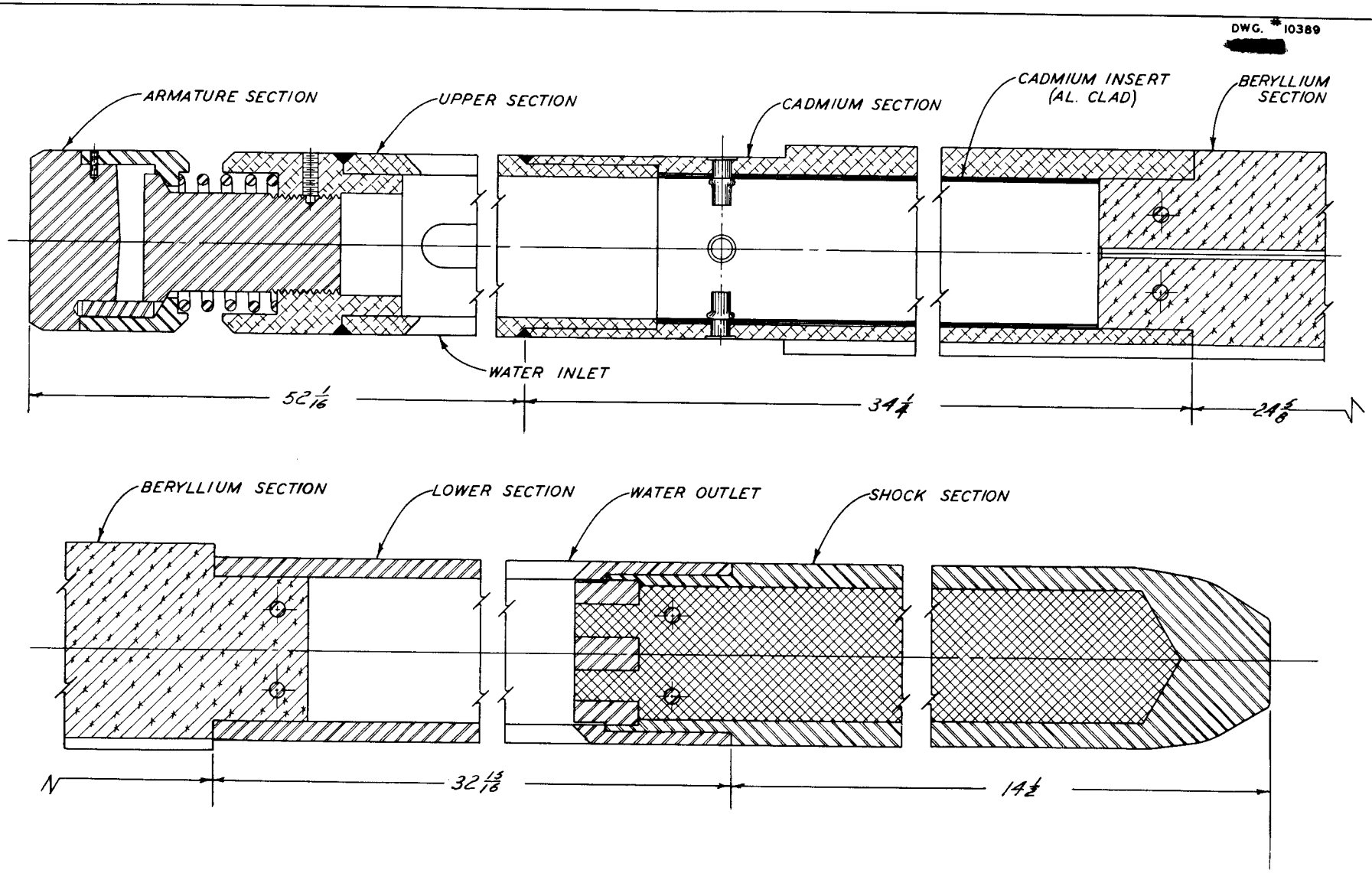

FIG. 2.3.B
M.T.R
SHIM SAFETY ROD WITH BERYLLIUM

OAK RIDGE NATIONAL LABORATORY

2.3.2 Regulating Rods. The regulating rods are designed to provide continuous control of the reactor. While four locations are provided for these rods in the beryllium reflector (see Fig. 2.4.A), normally only one will be used for control with one more as a stand-by. The remaining two locations can then be used for hydraulic rabbit tubes.

As shown in Fig. 2.3.C, each rod is 1½ in. in diameter and consists of an upper aluminum section, a middle section containing cadmium sandwiched in aluminum tubing, and a lower aluminum section. Guide bearings are provided in the upper and lower support castings. The regulating rod itself is connected by a quick-release mechanism to the regulating-rod support shaft, which is guided by bearings in the spider and the top plug platform.

When connected to its support shaft, each regulating rod is driven by a low inertia electric motor through a pinion and rack integral with the shaft. The motor will be driven by an amplidyne as described in Chap. 5.

When disconnected the regulating rod rests on the top of the upper bearing grid. In this position the lower tip of the regulating rod and the lower tip of the cadmium section are 60 and 12 in., respectively, below the center of the pile lattice. Table 2.3.B summarizes the pertinent data for the regulating rods.

TABLE 2.3.B

Regulating Rod

Composition	Cadmium-aluminum
Weight of regulating rod	10.5 lb
Weight of drive rod	36.0 lb
Weight of water in drive rod	9.0 lb
Total weight of combined rods	55.5 lb
Buoyant force of regulating rod	8.1 lb
Buoyant force of drive rod	9.8 lb
Total buoyant force	17.9 lb
Resistance force of rod through pile section (friction)	~ 7.4 lb
Acceleration	~ 1.3g
$\Delta k/k$ per rod	~ 0.005
Drive motor rated power	1 hp

DWG. # 10391 [redacted]

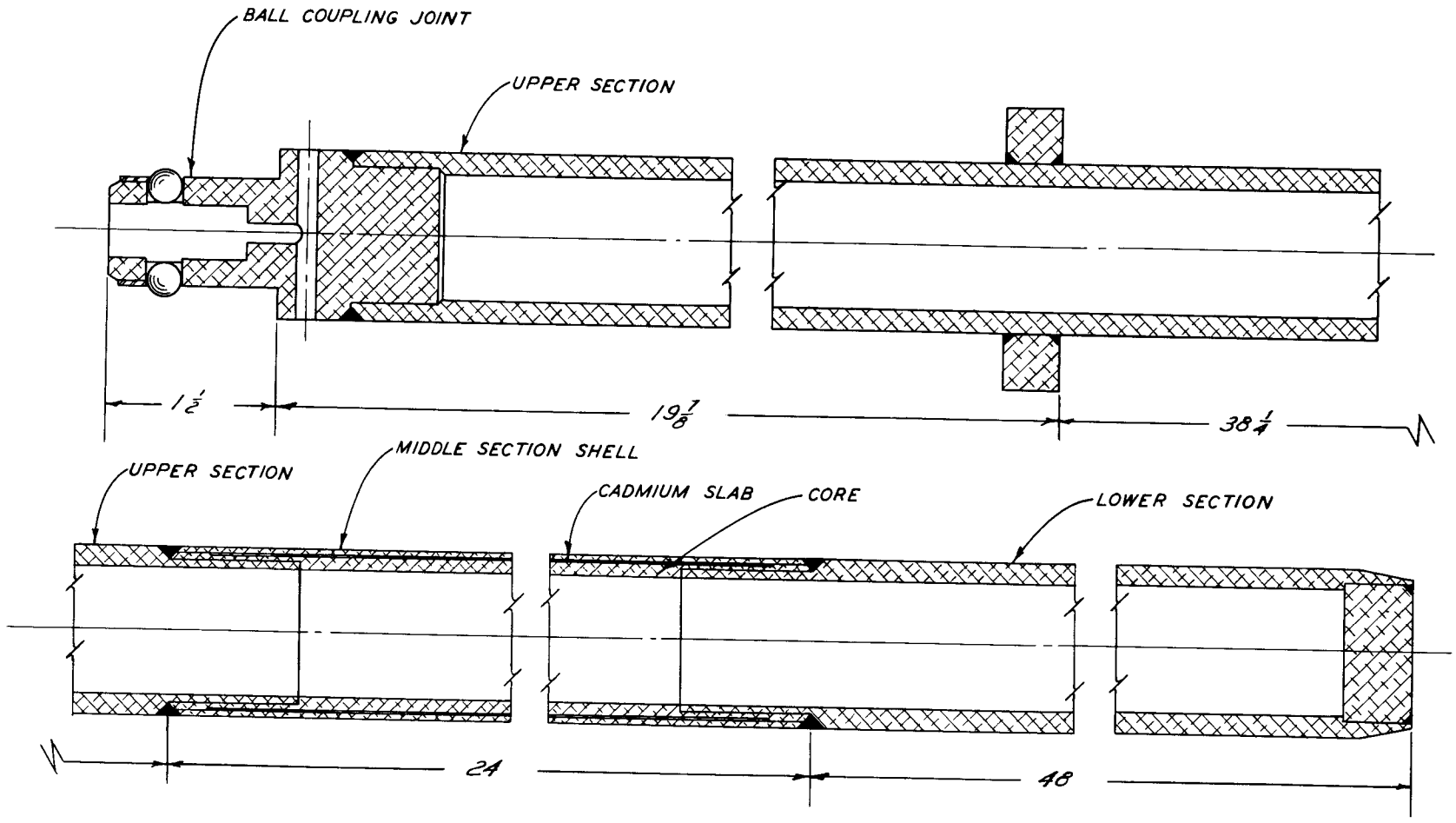

FIG. 2.3.C
M.T.R.
REGULATING ROD

OAK RIDGE NATIONAL LABORATORY

2.3.3 Miscellaneous Equipment Connected with Control Rods. *Drive Shafts.* The drive or support shafts for the control rods primarily provide a connecting link between the rods and their driving mechanism. The drive shafts are made up in three sections. The top section of stainless steel carries the rack or acme thread to fit the driving mechanism. The two lower sections are of aluminum, the middle piece being filled with lead shot to reduce gamma radiation; the bottom section carries the electromagnet in the case of the shim rods and the quick-release mechanism in the case of the regulating rods.

Upper and Lower Rack Housing and Cover, Regulating Rod. The upper rack housing, fabricated from cast iron, is fastened to the upper surface of the top plug platform (see Fig. 2.F). It functions as part of the guide and bearing for the regulating-rod drive rack, houses the rack pinion, and locates the regulating-rod speed reducer and position indicator. The rack housing cover is bolted to the housing and completes the regulating-rod guide and bearing. Microswitch brackets are fastened to the rack housing cover, five of which are located on one side of the vertical centerline and two on the other side. One of the latter, the long bracket, accommodates two microswitches, which are adjustable with respect to each other. These microswitches are used in the interlock system which controls the relative motions and positions of the regulator and shim rods. This system is fully discussed in Chap. 5.

The lower rack housing, attached to the undersurface of the top plug platform, functions as a seal for the regulating-rod drive shaft and as a means of support for the lower shock absorber.

Upper and Lower Shock Absorbers, Regulating Rod. The upper shock absorber is bolted to the upper surface of the upper rack housing and cover. It performs the function of dissipating the energy in the motor when the amplidyne armature circuit fails to stop the servo motor on the regulating-rod upstroke. It also serves as the upper end housing for the regulating-rod drive. The shock absorber is capable of resisting a force greater than 1300 lb occurring when the rod moves upward with a velocity of 4 ft/sec.

The upper end of the drive rack engages a plunger and moves it against an oil cushion, forcing the oil through an annulus between a flange on the plunger and the tapered wall of the housing. The oil is retained in the chamber formed between the housing and the guide by means of "O" ring seals.

A spring returns the plunger to its normal position. A threaded plug is provided in the top of the shock absorber to permit access to the rod locking device.

The lower shock absorber is fastened to the lower rack housing and is similar in principle to the upper shock absorber. It performs the function of dissipating the energy in the servo motor when the rod is driven to its lowest position.

Drive-rod Top Plug Seal. The top plug seal for both the regulating and shim drive rods is designed to prevent water leakage where the drive rods pass through the top plug. A packing nut, when tightened against its seat in the seal housing, holds chevron leather packings against the wall of the seal housing and the drive rod. As an added precaution against the leakage of contaminated water from the reactor, a purging system is incorporated into the design. This is accomplished by introducing a supply of fresh water under the seal at a pressure slightly greater than the water in the reactor tank. The water flows through the annulus between the regulating-rod drive and its bearings into the reactor tank.

Position Indicators. The regulating- and shim-rod position indicators have been designed to indicate the exact position of the rods at any time. Rod positions may be read by means of direct-reading dial indicators at the platform of the top plug and by means of remote selsyn-driven (dial) indicators at the console in the control room.

The regulating-rod primary indicators at the top plug platform consist of a double-disk dial operated by means of suitable gearing. The outer disk shows the position of the rod in inches while the inner disk indicates to hundredths of an inch. One complete revolution of the outer disk provides indication for 30 in. of travel of the rod, while the inner disk makes one revolution for each inch of travel of the rod.

The secondary position indicator at the console consists of a dial pointer which moves 240° for 12 in. of travel of the regulating rod. This provides 20° of rotation of the pointer for each inch of rod travel.

The shim-rod primary indicators at the top plug platform consist of standard counters with five digits driven through suitable reduction gearing attached to a flexible shaft, which in turn is driven directly from the

shim-safety rod drive motor. These indicators will show the position of the rod to thousandths of an inch.

The shim-rod secondary position indicator at the console consists of a dial pointer which rotates 9° for each inch of rod travel; thus for a total travel of the rod of 31 in., the dial will rotate 279°.

The secondary indicator in both cases is operated by means of a receiver selsyn. The regulating-rod-driver selsyns are located at the regulating-rod driver, while those for the shim rods are located under the top plug platform. All are driven by means of suitable gearing, and in all cases either the primary or secondary indicators may be removed for servicing without affecting the other.

Speed Reducer and Motor Coupling, Shim-safety Rod. The speed reducer consists essentially of a helical gear and pinion supported by ball bearings, mounted in a housing which bolts to the upper rack housing. The position indicator operates from a bevel gear fastened to the helical gear shaft. Gears and bearings are lubricated by immersion in oil. An oil seal, pressed into the pinion bearing cap, prevents oil leakage around the pinion shaft.

The motor coupling functions as the connection between the speed-reducer shaft and the motor shaft. It consists of a splined collet which fits the spline shaft of the motor and is taper-pinned to the speed-reducer drive shaft. The taper pin acts as a shear pin in case an excessive load is placed upon the shim rod. The collet is threaded and tapered for an adjustable nut. When the nut is tightened, it clamps the collet to the splined motor shaft, thus eliminating any lost motion between motor and speed-reducer shaft.

Magnetic Clutch. This clutch is essentially a horseshoe or bipolar electromagnet. The pole cores and yokes are made of laminated S.A.E. 1010 steel, 1/16-in. laminations insulated with baked-on bakelite varnish 0.002 in. thick. The energizing coils have 3500 turns of No. 25 Formex-coated copper wire, wound on forms of Fosterite Vacuum Impregnate.

The clutch housing is grounded and forms one side of a circuit which indicates when the magnetic clutch is supporting the shim-safety rod. The casing consists of a watertight can of type 304 stainless steel, with welded seams, gasketed at the top with polyethylene. The bottom is flanged and tapped for a diaphragm sealing flange. Nonmagnetic shim material consists of a single sheet of stainless steel 0.008 in. thick and a sheet of mica 0.002 in. thick.

The oil filling used for this clutch is perfluorodimethylcyclohexane. Pressure build-up due to gassing of the oil is avoided by a vent to atmosphere through the cable channel.

On the basis of previous test data, the holding force of this clutch should be a minimum of 500 lb at 100 mamp current, and it should release a 600-lb load held at 140 mamp current in 15 msec or less.

All component parts have been tested separately, and two complete magnets have been assembled and are now undergoing tests in the mock-up.

Bearings. Each shim-safety rod is guided by two bearings consisting of four spring plates, in each of which there are mounted three stainless steel-encased graphite rollers. These plates are mounted in a steel cage and are located in the upper and lower guide grids. The center of the upper bearing is located 3 ft 10-5/8 in. from the centerline of the reactor and is supported by the upper grid support. The centerline for the lower bearing is located 4 ft ¼ in. below the centerline of the reactor and is supported from the lower grid support.

Bottom Absorber, Shim-safety Rod. The bottom shock absorbers for the shim-safety rods are located on a plate mounted on the bottom plug. They consist merely of dash-pots into which plungers mounted on the bottom of the shim rods fit. Since they are on the bottom plug, they are always filled with water, which acts as the damping fluid.

These shock absorbers also contain a mechanism(3) which indicates whether or not the rods are seated in the shock absorber and are therefore fully in the reactor. This is accomplished by introducing a high-pressure demineralized-water line through the bottom plug into each shock absorber. The pressure in this line will be maintained above that normally at the bottom of tank section E, so that when the shock absorber is not seated water flows up into the tank. When the rod is seated, however, the flow is decreased and appropriate signals from the pressure meters inform the reactor operator of the situation.

2.4 REFLECTOR

2.4.1 Beryllium. It has been indicated in Chap. 1 that as far as is known beryllium is the best reflector from a nuclear point of view, its use having been questionable only because of supply difficulties and lack of data on its chemical and mechanical properties. The initial tests on beryllium and the selection of the type of production used are discussed in Appendix 5. The following section describes the final form of the MTR beryllium reflector.

The beryllium section of the MTR reflector is all contained inside tank section D (see Fig. 2.4.A), occupying the space between the active lattice and the tank wall. This beryllium has a finished weight of about 5750 lb and a volume of nearly 50 cu ft. The total height of the reflector is 39-3/8 in. (approximately 100 cm), the layout and shape of the pieces are shown in Figs. 2.4.A and B. These diagrams are cross-sections below and above the beam holes, and they show that the majority of the pieces are continuous throughout the 100 cm length.

Following is a brief description of the various pieces shown in Figs. 2.4.A and B: The key pieces are those numbered E-1 through E-4, which contain large holes throughout their length for passage of the regulating rods. These pieces are mounted and held rigidly in position by the regulating-rod bearing mount in the lower grid (see Fig. 2.D). The A pieces (A-1 through A-43) are fitted with "end boxes" which fit tightly into the holes in the lower support grid (see Fig. 2.E). Tolerances are such as to allow an average spacing of 0.020 in. between pieces. The remainder of the pieces are large heavy blocks machined to fit into their respective places and are not rigidly held. The water film between surfaces prevents surface abrasion, and appropriate holes are provided for the passage of cooling water. For example, each A piece has an axial hole 3/16 in. in diameter and a semicircular groove down each face 1/8 in. in diameter (see Fig. 2.4.C). It should be noted that the axial 3/16-in. hole was necessitated not by the volume of cooling water required but by the surface necessary for heat transfer and by the surface stress set up by heat differentials in the beryllium.

The large pieces N-1, N-2, N-3, N-4, F-1, and F-2 are semicircular on the bottom to fit over, but not touch, the HB thimbles. These pieces actually rest on the lower beryllium pieces N-5, etc., which are grooved on top to fit

DWG. # 10385
[redacted]

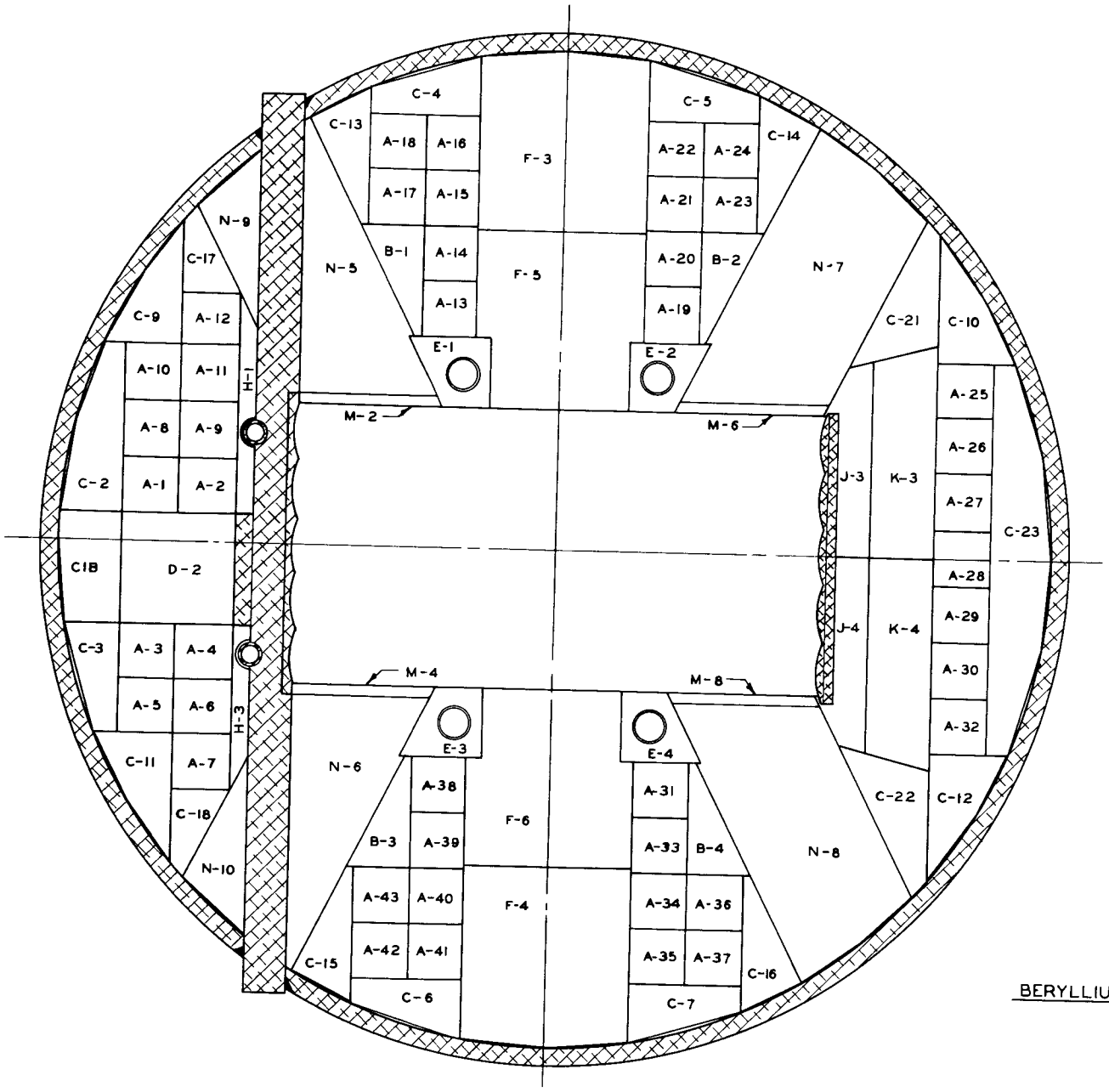

FIG 2.4.A
M.T.R
BERYLLIUM BELOW ℄ OF REACTOR

OAK RIDGE NATIONAL LABORATORY

DWG. # 10386 [redacted]

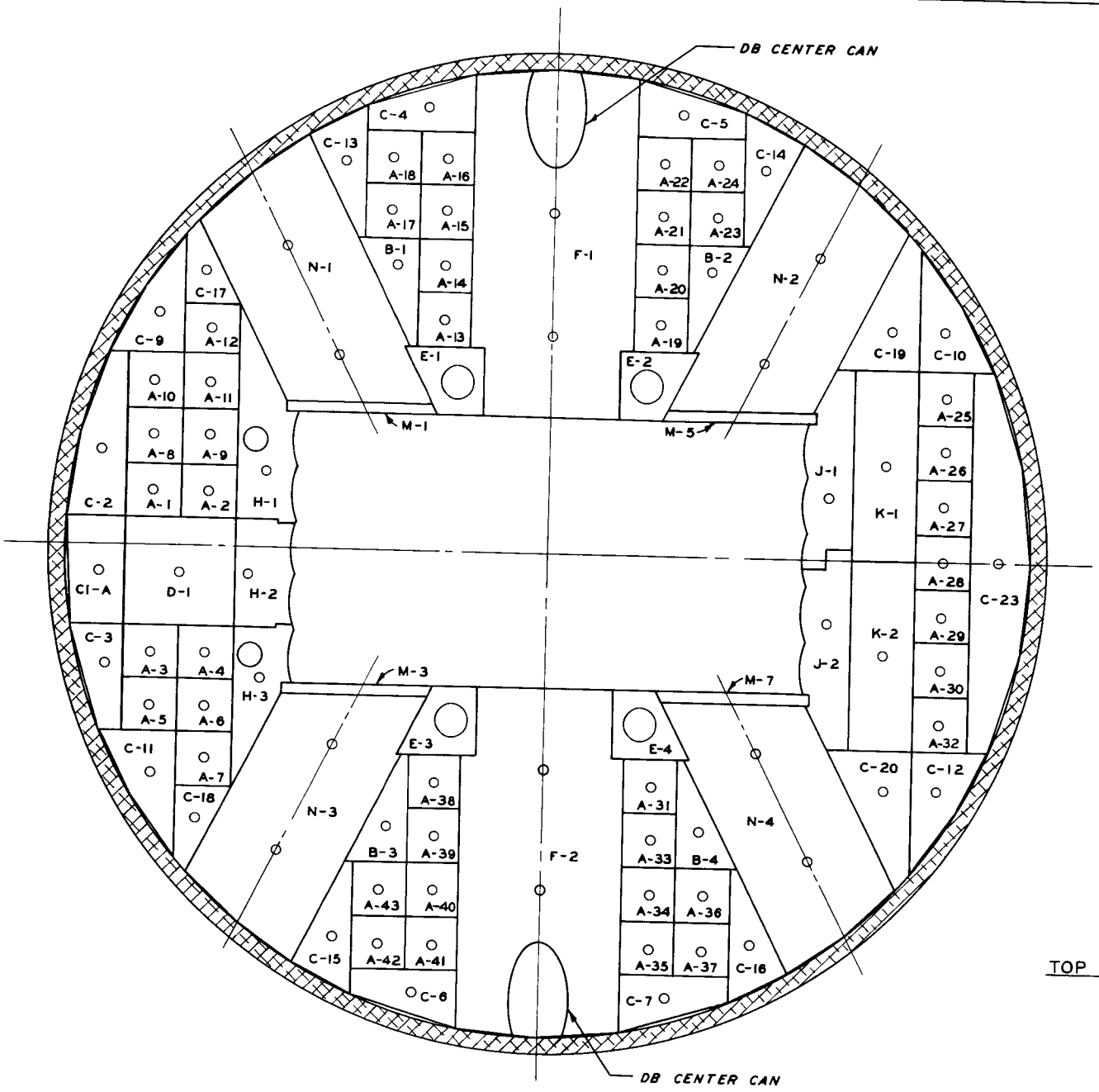

FIG. 2.4.B

M.T.R.

TOP VIEW OF BERYLLIUM

OAK RIDGE NATIONAL LABORATORY

DWG. #10384 [redacted]

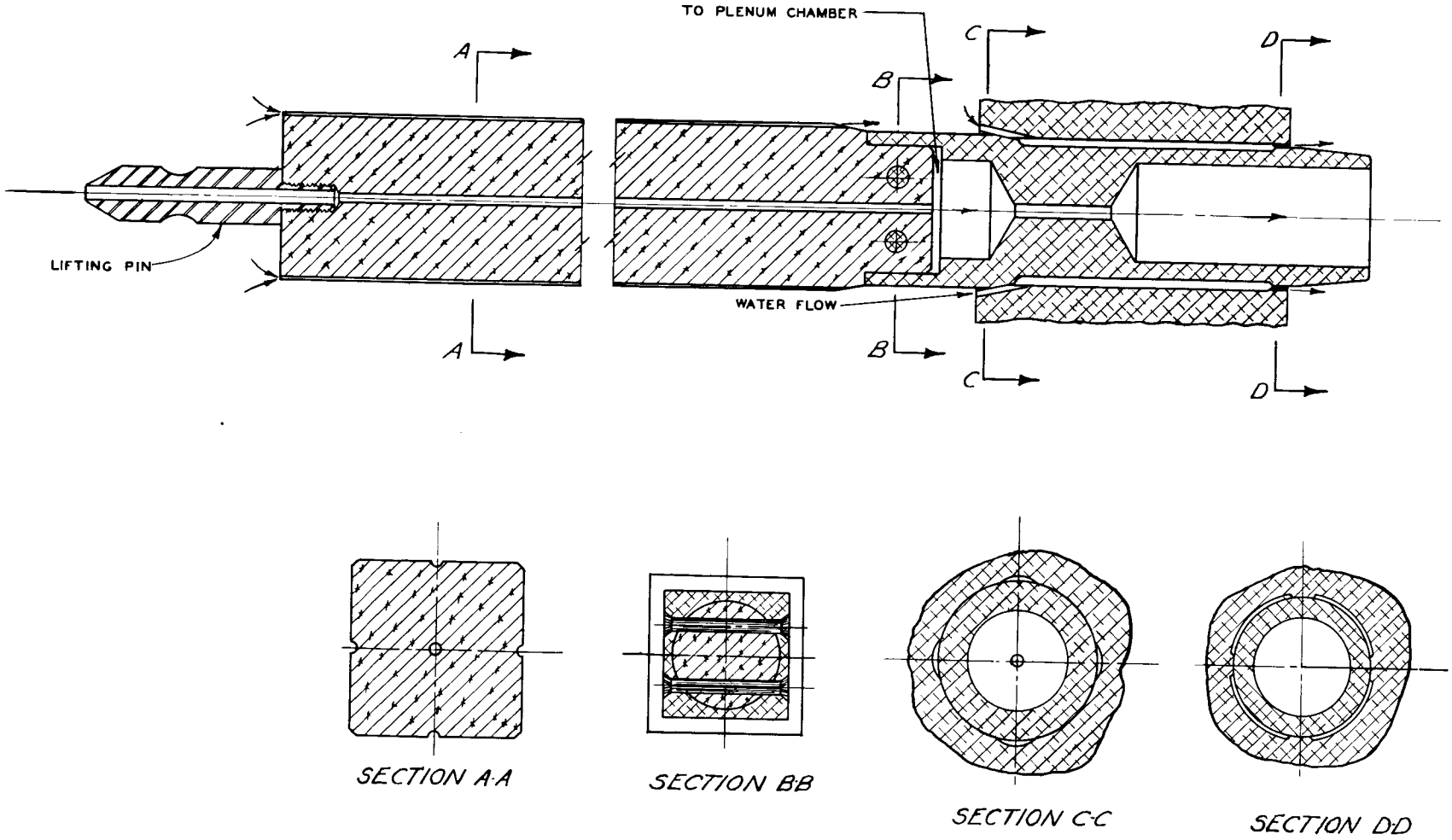

FIG. 2.4.C
M.T.R
BERYLLIUM A - PIECE

OAK RIDGE NATIONAL LABORATORY

under the respective thimbles. Plates M-1 through M-8 are fastened to the N pieces to provide a narrow tight-fitting collar around the inner end of the thimbles. This prevents water leakage from the reflector into the lattice (see Section 2.7.1). The packing is somewhat complicated by the aluminum bar which contains the holes for the horizontal pneumatic rabbits (see Section 3.5.1). This bar is shown between N-5 and N-9 and between N-6 and N-10 in Fig. 2.4.A.

While the beryllium pieces C-1-A and C-1-B, as well as D-1 and D-2, are shown as separate pieces, they are mechanically joined by a sealed, empty aluminum can which effectively eliminates the reflector from hole HG-9. D-1 and D-2 form the plug for the discharge chute and are lifted out as one piece when it is necessary to use the chute. Piece A-31 is drilled out to provide space for the permanent antimony source (see Chap. 4).

Figures 2.4.D through G are photographs of the MTR beryllium assembled at the Y-12 shops prior to final fitting. Figure 2.4.D shows the complete assembly except for one E piece. Figure 2.4.E shows the same assembly with some of the pieces raised to show the water-cooling grooves. Figures 2.4.F and G show some of the larger blocks and the holes for the HB thimbles. The wooden beam passing through the left side of the reflector, as shown in these pictures, represents the HT-1 liner (see Chap. 3).

No final figure has yet been made available for the total cost of the MTR beryllium, but the present estimate, including raw material, processing, and machining, amounts to $1,000,000 to $1,300,000.

2.4.2 **Graphite.** Part of the purpose of the MTR is to provide as large a neutron flux as possible over as great a volume as possible. To accomplish this it was decided to include a secondary reflector of graphite[4] outside the main reactor tanks.

The main problem faced in the design of the graphite reflector was to take care of the graphite expansion due to both radiation (Wigner disease) and/or temperature. To overcome this difficulty the graphite reflector is composed of two zones: a pebble zone which is adjacent to the reactor tank and extends for a minimum of 40 cm from the tank wall to form a square; and a permanent graphite zone 12 ft overall north and south, 14 ft overall east and west, and 9 ft 4 in. high (see Figs. 2.A and C).

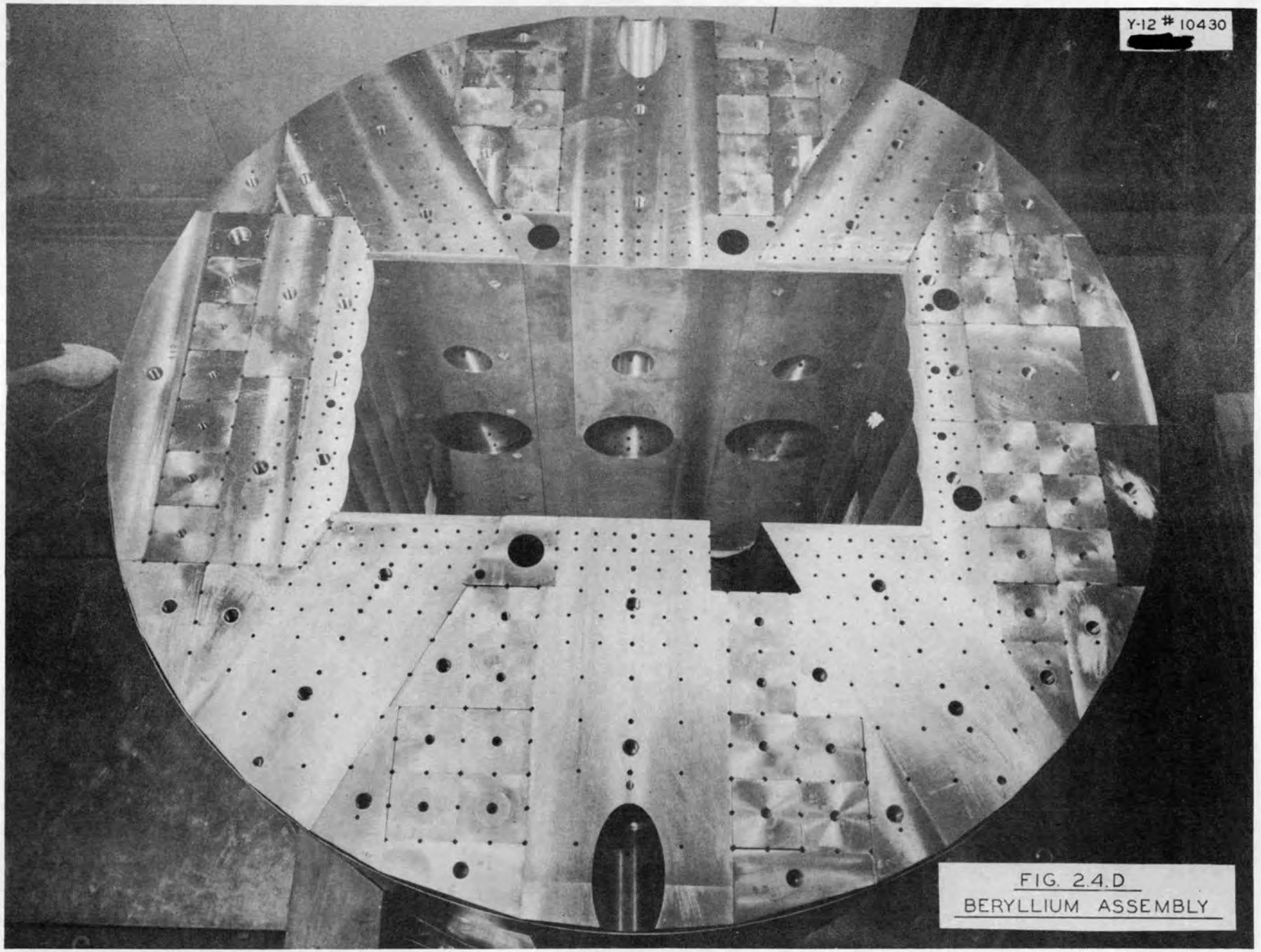

FIG. 2.4.D
BERYLLIUM ASSEMBLY

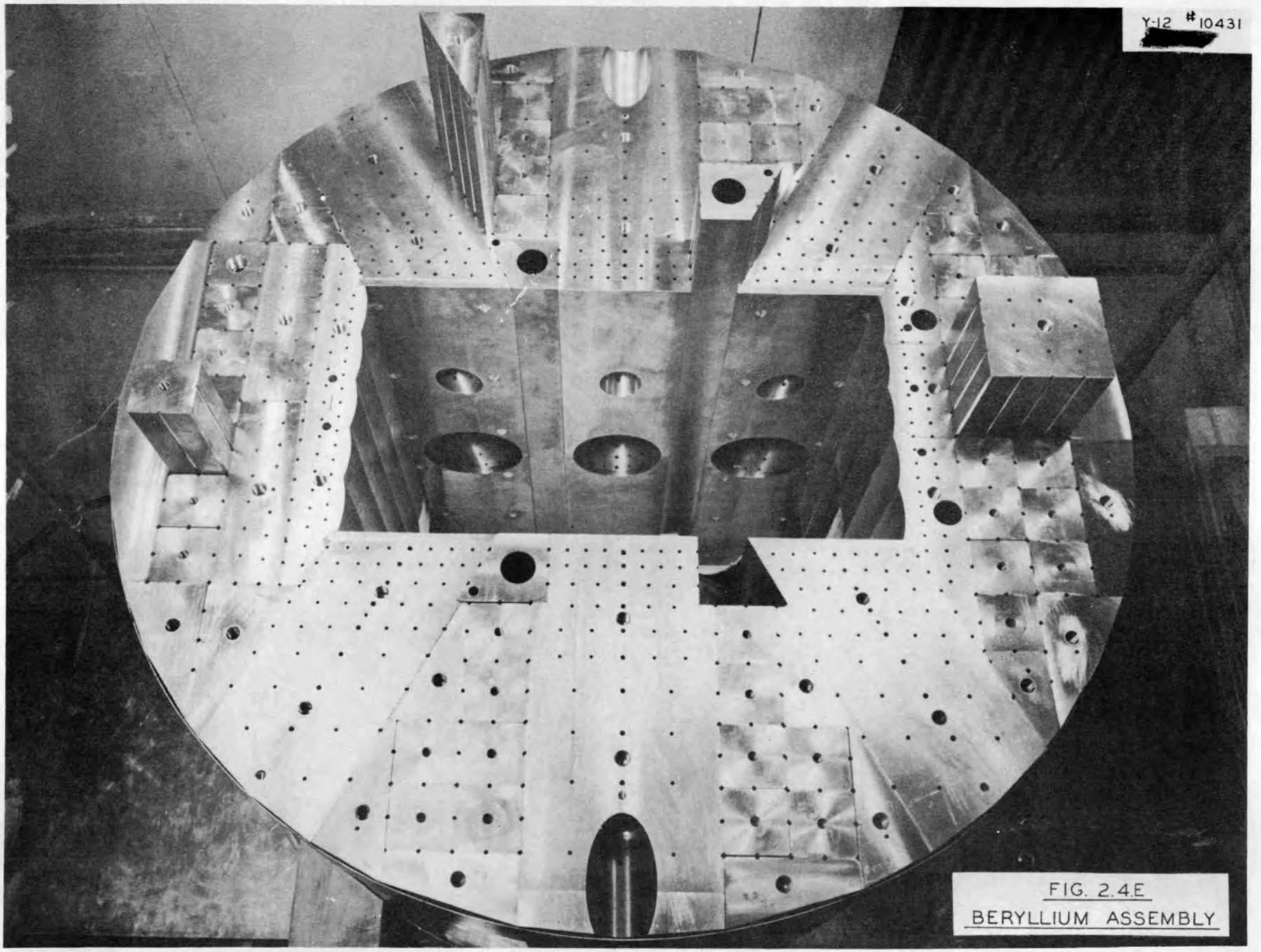

FIG. 2.4.E
BERYLLIUM ASSEMBLY

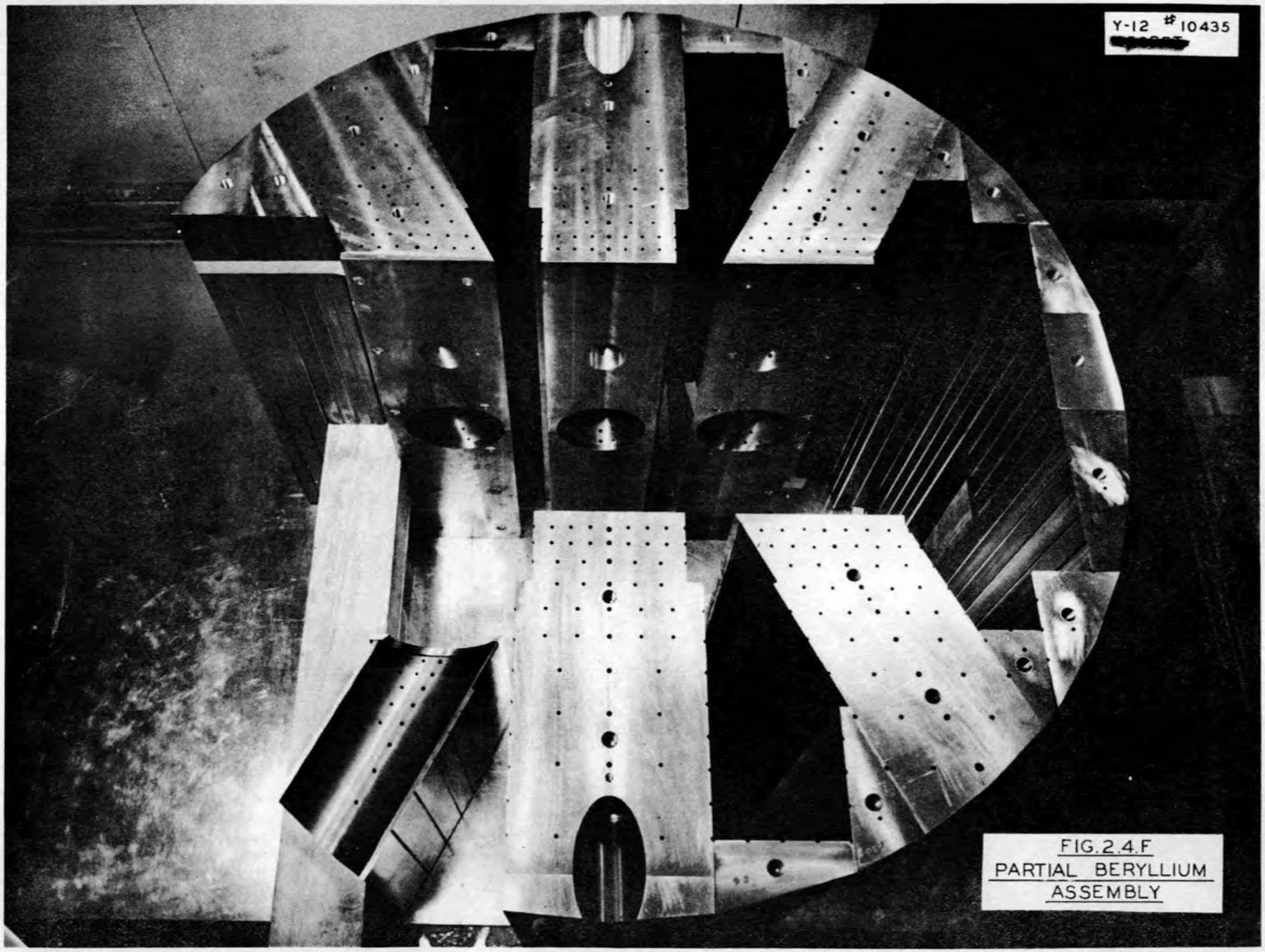

FIG. 2.4.F
PARTIAL BERYLLIUM
ASSEMBLY

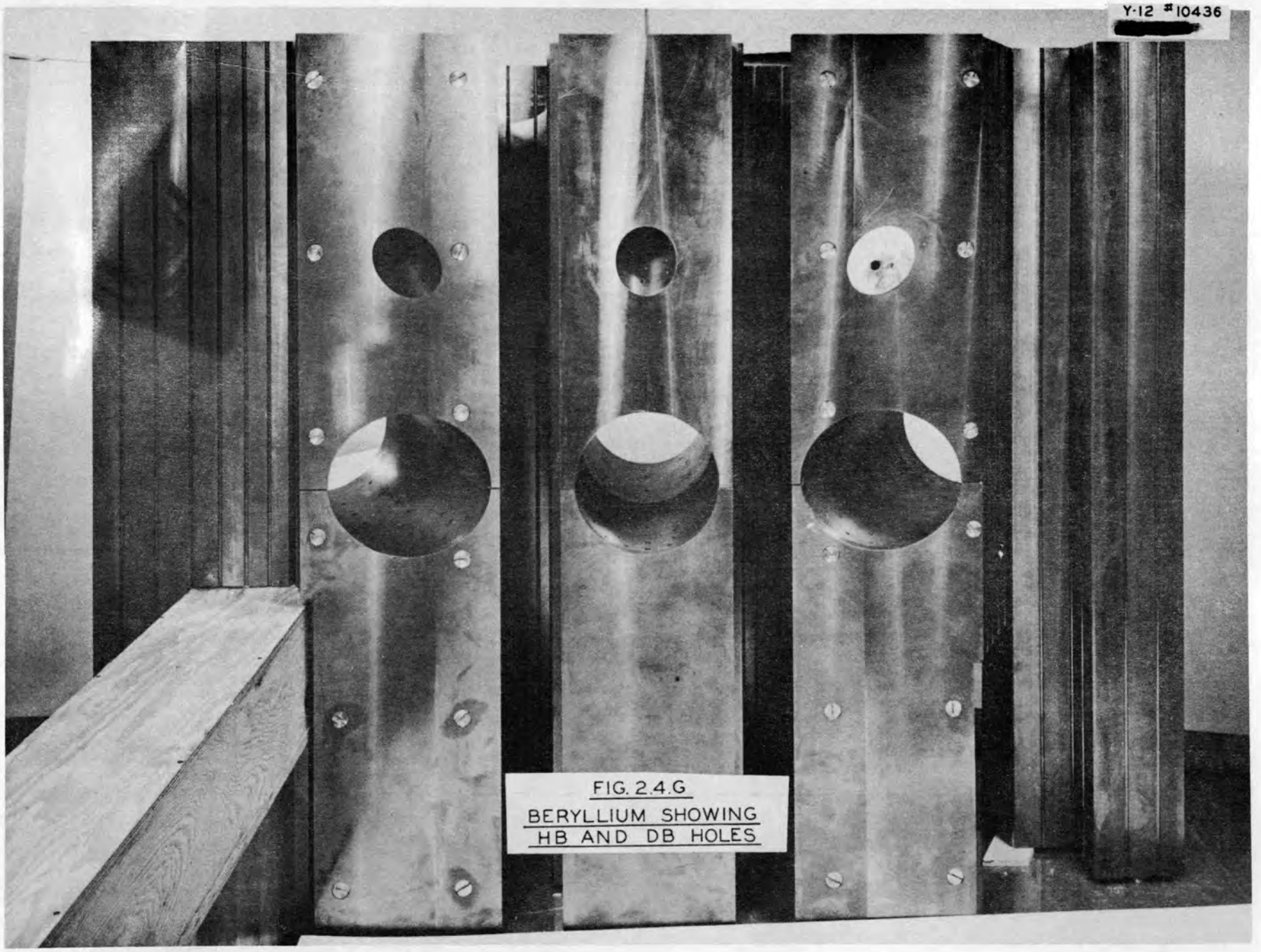

FIG. 2.4.G
BERYLLIUM SHOWING
HB AND DB HOLES

The pebble zone is a volume 7 ft 4 in. square by 9 ft high surrounding the reactor tank and filled by some 700,000 1-in.-diameter AGOT graphite pebbles. The pebbles rest on a base plate mounted on the lower thermal shield plate and are free to expand upward. In this way any expansion due to radiation effects or temperature increase will merely raise the level of the balls without exerting undue stress on the tank wall or the permanent graphite.

Two discharge chutes in the pebble support plate can be opened into a discharge bin, thus allowing for removal of the pebbles at any time. This easy removal of the pebbles carries out the MTH feature which provides for removable B, C, and D tank sections (see Section 2.3.1). Furthermore, since the pebbles are in the highest flux region of the graphite reflector, any radiation damage will affect them first and they can be replaced.

The permanent graphite is composed largely of 4- by 4-in. graphite bars stacked to a height of 9 ft 4 in. with the bottom located 4 ft below the centerline of the active section (i.e., at elevation 96 ft; see Section 2.3.1). The system of stacking the graphite is shown in Figs. 2.4.H and I. The first of these figures shows the overall relationship of all four walls at one level while the second figure illustrates the stacking and numbering system. It will be noted that every other row has a 4- by 6-in. block at each end to allow for the staggering of the rows.

The stacking was, of course, complicated by the experimental holes penetrating the permanent graphite. These larger holes were cut into the walls by clamping a group of bars together and drilling through the assembly. Each wall array is made integral by a system of 1- by 1-in. keys, and the entire assembly is keyed at its inner face to the supporting rails. This means that any expansion will be outward, tending to compress the ½ in. of soft asbestos which fills the gap between the permanent graphite and the thermal shield. As of January 1, 1951 the graphite machining was about 30% completed at the Y-12 shops. Each wall will be erected and checked there before shipment to Idaho. Figure 2.4.J is a picture of the lower part of the west wall being erected at Y-12.

Each wall of the permanent graphite is mounted on rails running parallel to its length. The rails are supported by jack screws which are fastened to the lower plate of the bottom thermal shield and pass through clearance holes in the inner plate of the lower thermal shield (see Fig. 2.A). The support rails must be accurately leveled in order that the graphite will stack properly and be in correct location for the beam holes.

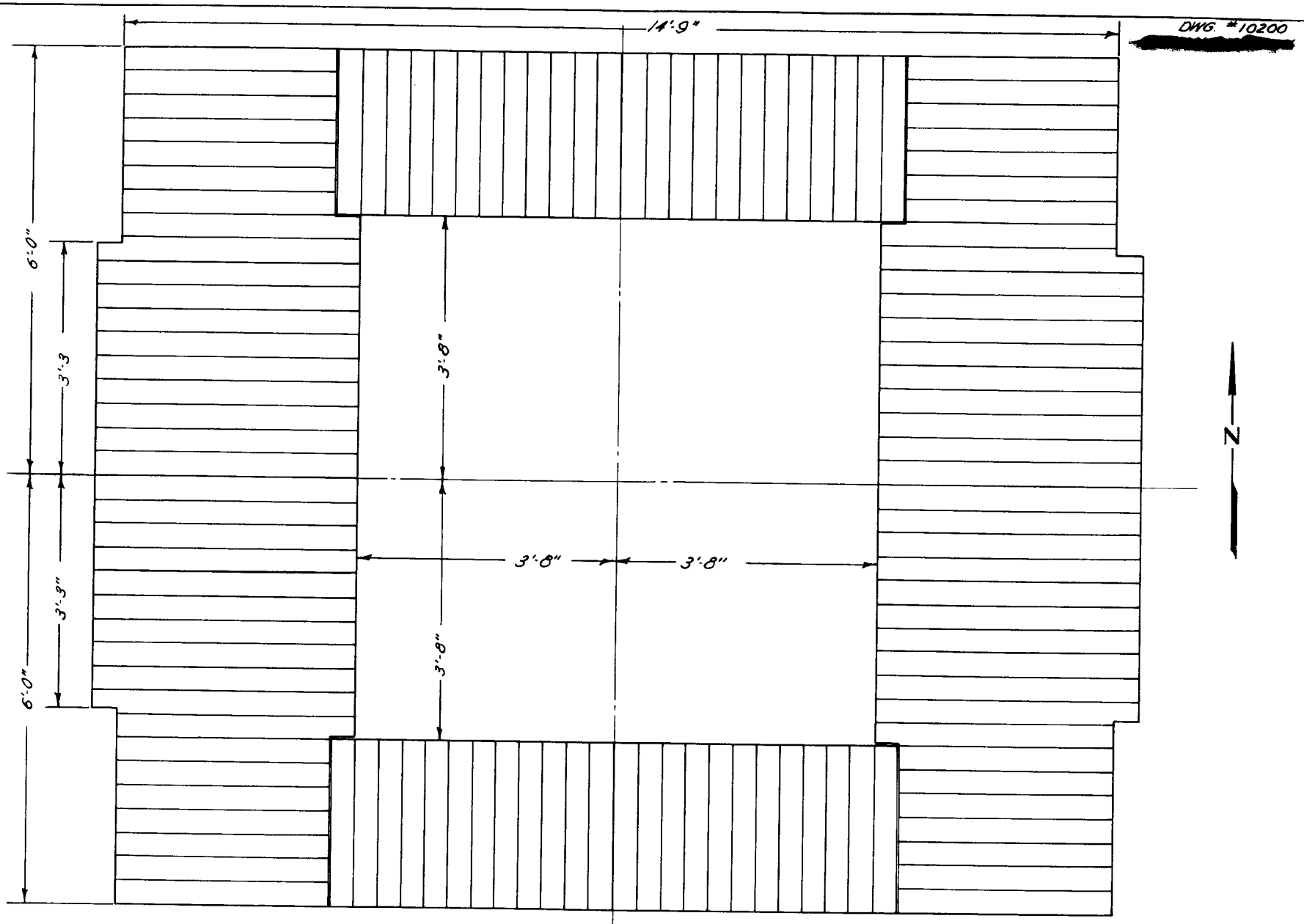

FIG. 2.4.H
M.T.R
PERMANENT GRAPHITE
OAK RIDGE NATIONAL LABORATORY

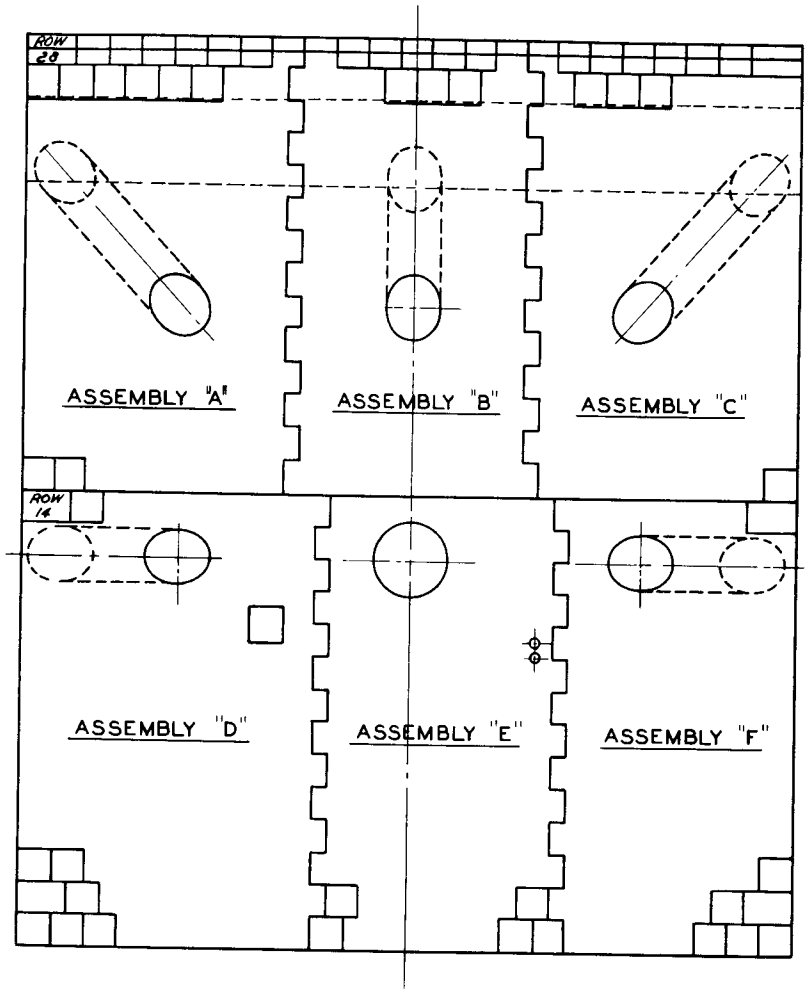

DWG. # 10482 [redacted]

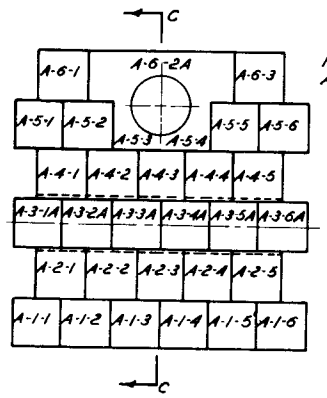

SAMPLE ASSEMBLY "A"

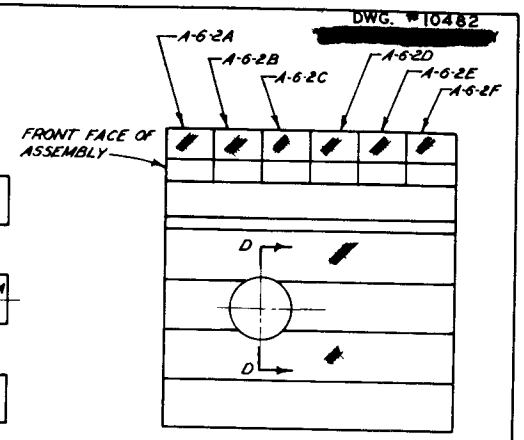

SECTION C-C

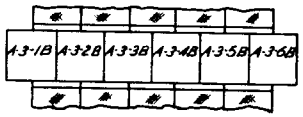

SECTION D-D

KEY TO MATCH-MARKING SYSTEM

All individual blocks are to be match-marked as shown in Sample Assembly "A" and described below:

1st Symbol (Letter) - Assembly in which block appears.

2nd Symbol (Number) - Row in the Assembly in which block appears.

3rd Symbol (Number) - Position of the block in the row; Numbers starting from left side of the Assembly. Viewed from center of Reactor.

4th Symbol (Letter) - Position of the block from front face of Assembly. Letters starting from front face of Assembly. (See Sections C-C and D-D) This Symbol is used only where one block does not extend the full depth of the Assembly.

West Wall Assembly	A, B, C, D, E, F
East Wall Assembly	G, H, J, K, L, M
South Wall Assembly	N, P, Q, R, S, T
North Wall Assembly	U, V, W, X, Y, Z

FIG. 2.4.I

GRAPHITE ASSEMBLY & NUMBERING SYSTEM

OAK RIDGE NATIONAL LABORATORY

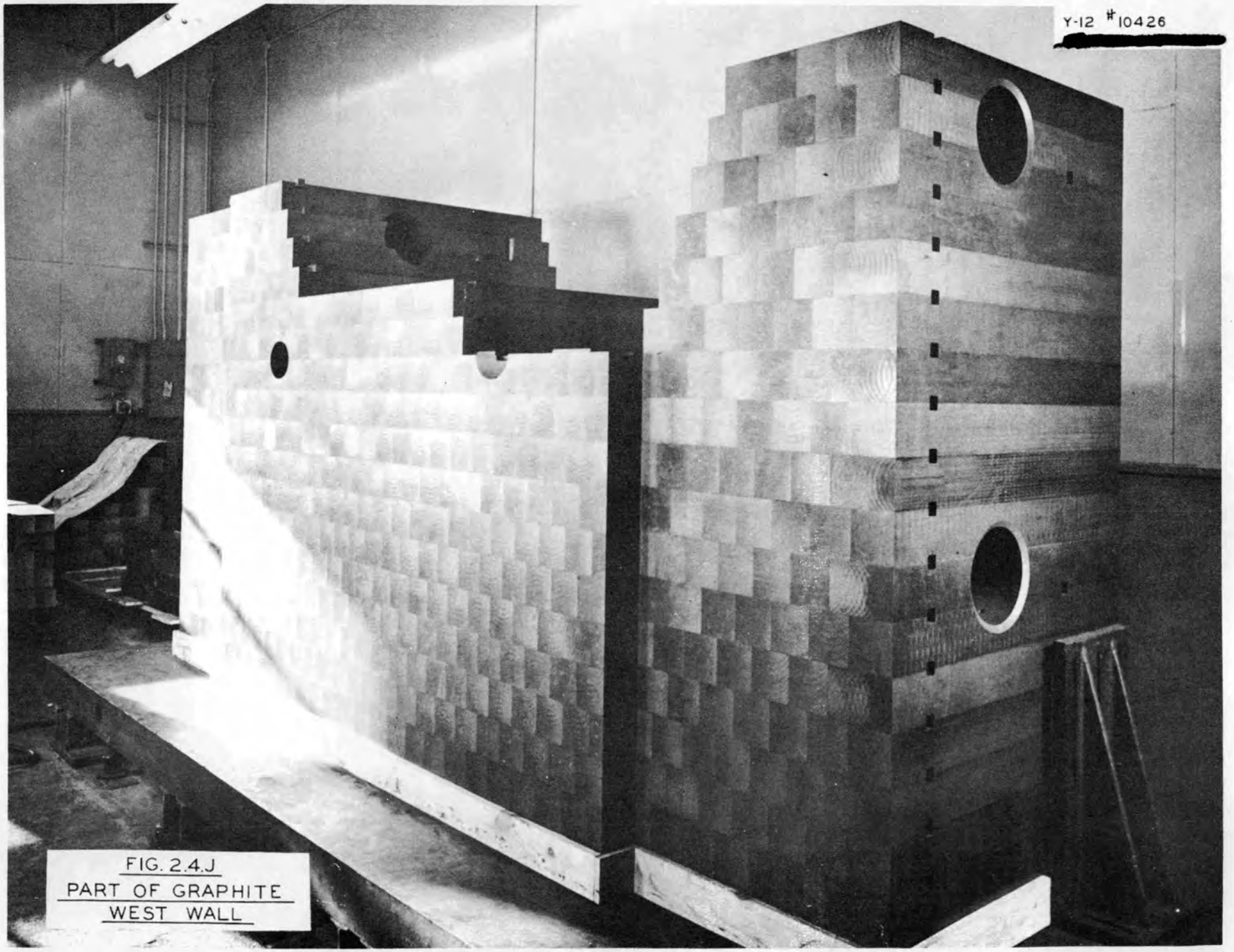

FIG. 2.4.J
PART OF GRAPHITE
WEST WALL

A great deal of work was done before a final choice was made of the kind of graphite to be used in the reflector. High-purity graphite is, of course, desirable because of lower induced activity and lower neutron absorption. Experimental work[5] showed that the induced activity of the best available type of graphite (GBF and AGOT) was largely due to the 49-day iron which was present in concentrations of 1 ppm in GBF and 10 ppm in AGOT. While AGOT had a somewhat higher induced activity and absorption than GBF, its cost was only two-thirds of that of the GBF. As a balance between usefulness and economy it was decided to make the thermal column[6] and its extension through the permanent graphite out of GBF, the remainder of the permanent graphite being AGOT. The only exception to this was the need for a few 4- by 6-in. blocks in stacking, and these were obtainable only in AGHT graphite. The final graphite reflector and thermal column will consist of the following:[7]

APPROXIMATE FINISHED WEIGHT (tons)

Pebbles, AGOT		19
Permanent zone,	AGOT	48
	AGHT	1.5
	GBF	25

The graphite reflector, owing to the heat absorbed in it, must be cooled. This is done by drawing large quantities of air through holes in the permanent graphite and through the interstices between the balls in the pebble zone. This cooling system is fully described in Section 2.7.2.

2.5 THERMAL SHIELD

2.5.1 The Steel Plate Structure. The thermal shield[8] of the Materials Testing Reactor is that part of the reactor structure between the solid graphite zone and the concrete biological shield. It has been established that a 50°F temperature drop across the concrete biological shield[9] is the temperature differential which can be tolerated without danger of failure within the concrete structure due to induced thermal stresses. The MTR thermal shield is a large steel structure which reduces the neutron and gamma flux to such an extent that a comparatively low heat generation due to radiation occurs in the concrete.

The thermal shield, consisting of 4-in.-thick steel plates, may be visualized in so far as orientation with respect to the rest of the reactor is concerned by referring to Figs. 2.B and C, which are vertical and horizontal sections through the reactor, respectively.

The approximate overall size is as follows: 16 ft in the north-south direction, 14 ft in the east-west direction, and 12 ft 6 in. in height. The thermal shield, whose heat generation rate is approximately 95 kw, is cooled by an induced-draft air system which also serves as the graphite cooling system (see Section 2.7.2). The primary supporting structure is composed of four vertical "WF" columns with the load transmitted to these columns at the four corners of the bottom plate.[2]

The bottom plate of the lower thermal shield, while resting directly on the steel supporting structure, is in direct contact with the barytes concrete below it. This helps to cool the concrete by direct thermal contact. The upper plate of the lower thermal shield is in two parts. An inner ring 14 in. wide is welded directly to tank section E (see Fig. 2.E) in order to provide maximum cooling for this section.[8] The outer section is supported from the lower plate and is air cooled only.

The solid graphite is supported from the lower plate of the bottom thermal shield plate (as described in Section 2.4.2). The two plates of the upper thermal shield are independently supported from the concrete above them, and, with the exception of one point, which is a metal expansion joint—air seal, the top plates do not touch the side plates of the thermal shield. Figure 2.5.A shows the top plate arrangement. The eight side plates all rest on the lower plate of the bottom thermal shield and are essentially independent units. The four inner plates, and similarly the four outer plates, are loosely connected at the top corners by dumbbell-shaped pins which fit in oversize slots in the tops of adjacent plates.

Two important experimental facilities, the thermal column and the shielding facility (see Sections 3.1 and 3.2), require that a section approximately 6 by 6 ft be removed from the east and west thermal-shield side plates. Two components are added to the thermal-shield design by these facilities: (1) the neutron window, and (2) the neutron-absorbing curtain. The locations of these components may be visualized by referring to Figs. 2.B and C. When the 6- by 6-ft hole is cut in the thermal shield, it becomes necessary to replace

DWG. #10564 [redacted]

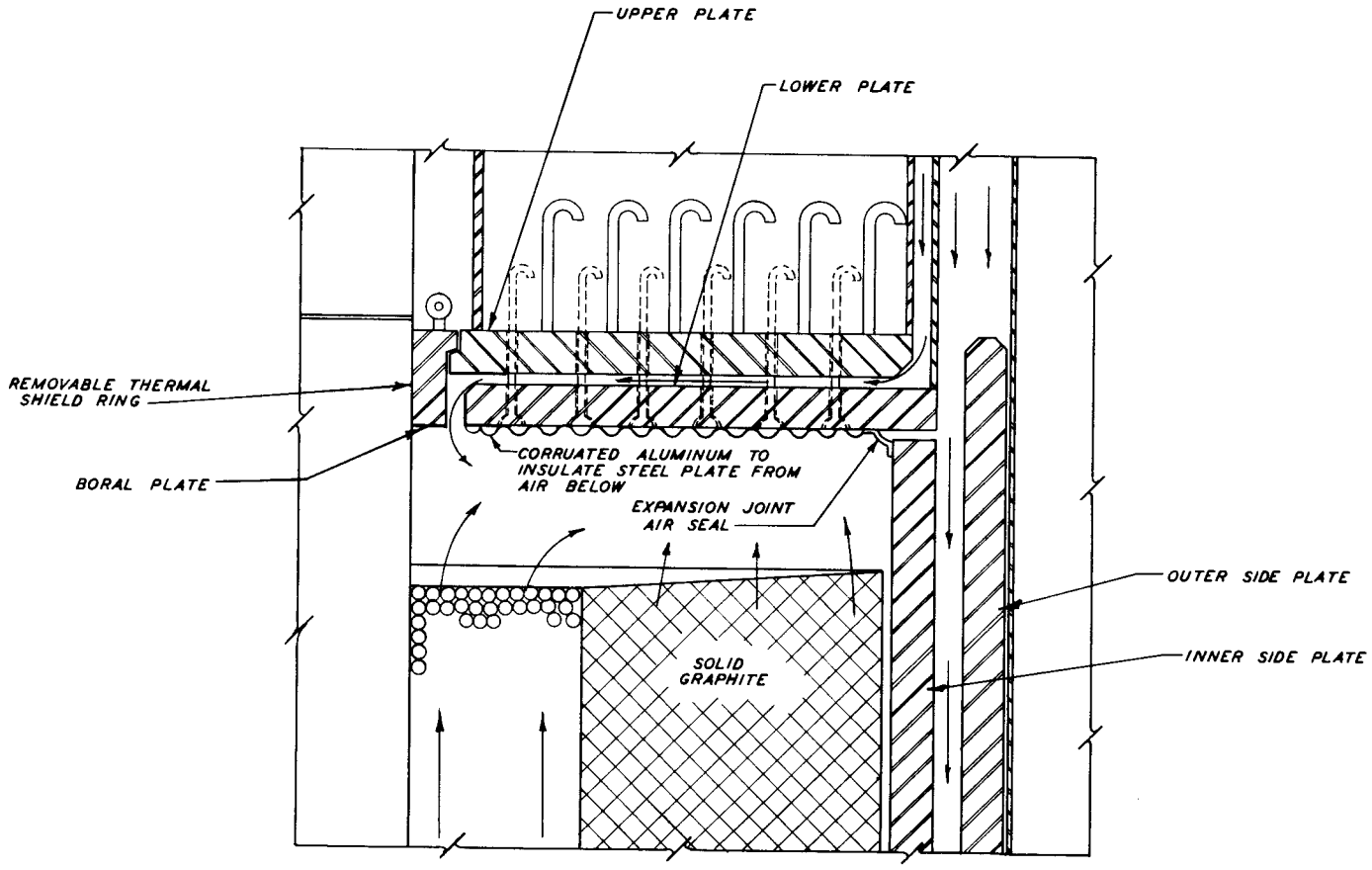

FIG. 2.5.A

TOP THERMAL SHIELD DESIGN

the steel removed on the thermal column side by a material that will absorb gamma radiation impinging on the inner side of the thermal shield and yet allow passage of thermal neutrons into the thermal column. The lead replacing the steel in this region is called the "neutron window." The "neutron-absorbing curtain" is a simply constructed remotely operated neutron shutter, which permits turning "on" and "off" the thermal-neutron streams to the thermal column and the experimental shielding facility.

2.5.2 Neutron Curtain in the MTR. A 6 ft 6 in. square sheet of ¼-in.-thick boral mounted in an aluminum frame will serve as the neutron curtain. This curtain will be used during operation, if desired, to cover the face of the thermal column and reduce the number of thermal neutrons entering the column. It will have rollers at its four corners that will travel in vertical guides mounted in the 3-in. space between the two 4-in. thermal shield plates.

A 2-in. by 7-ft vertical slot in the biological shield from the bottom of the thermal shield to the sub-pile room ceiling will house the curtain when it is not in use. To shield against radiation streaming, the lower portion of this slot will be filled with 2-ft-deep removable barytes concrete blocks supported from the sub-pile room ceiling by 6-in.-square steel bars which serve as additional shielding.

A lifting mechanism mounted on the top of the reactor structure raises or lowers the curtain as desired. After removing the concrete and steel shielding at the bottom of the curtain slot, the curtain can be lowered into the canal and a new curtain installed if necessary.

Provisions have also been made for installation of a curtain on the west side of the thermal shield at the face of the shielding facility; however, no curtain or lifting mechanism will be furnished initially.

2.5.3 The Neutron Window. The neutron window is a 3-in. sheet of lead placed between the permanent graphite and the thermal column to absorb gamma radiation but permit easy neutron passage. The lead sheet is mounted in a steel frame and placed in the approximately 6- by 6-ft hole in the outer thermal shield.

2.6 THE BIOLOGICAL SHIELD

The biological shield (see Fig. 2.A) around the reactor is designed to reduce by absorption the high neutron and gamma fluxes escaping through the reflector. The shield is designed to reduce these radiations to a safe level for personnel and to a level at which sensitive instruments can be operated outside the shield. This design limit and the basis for the design are summarized in Section 4.6.

The shield is penetrated by about one hundred holes of various sizes. Embedded in the concrete and welded to the steel plates which act as inner and outer form plates for the concrete are all the permanent liners for the experimental holes. One of the major problems in the construction of the reactor will be the alignment of these liners. As indicated in Section 2.1.1, the top of tank section E is the only reference point available, and accuracy is essential if the HB and DB inner liners are to fit into their respective locations in the tank section D wall.

The MTR shield is being built of barytes concrete in which the gravel part of the mix is approximately 93% $BaSO_4$. It was at first thought that only certain critical sections of the shield would be made of barytes, but, owing to difficulty of mixed pours, it was decided that a more satisfactory shield would be obtained if barytes was used throughout. In order to simplify the construction procedure and obtain a uniformly dense concrete, it is now planned to use the "Prepack" method for setting all the biological shield.

2.7 COOLING

2.7.1 Water Cooling. The theoretical and experimental bases for the cooling-water requirements are outlined in Chap. 4, where it is pointed out that the primary cooling requirement is a high speed (30 ft/sec) flow of the water through the fuel assemblies. Such a rate of flow allows good heat transfer from the metal (small film drop) but does not produce sufficient turbulence to distort the fuel plates.[18] The external water system described in Chap. 7 is designed to produce sufficient pressure (40 lb/in.^{2}) to cause a flow of 30 ft/sec through the fuel elements. Since this pressure forces approximately 20,000 gal/min through the lattice and beryllium, the temperature rise at 30,000-kw operation is only about 11°F.

Since the water flow in the beryllium and in the lattice are essentially in parallel, the water pressure across the reflector is also 40 lb/in.^{2},[11] and to obtain sufficient heat transfer area in the beryllium the cooling holes had to be fairly large (3/8 in. diameter). This, of course, allowed too much water to pass through the reflector, and a plenum chamber (see Fig. 2.5) is used under the beryllium to take some of the pressure drop and thus reduce the water flow. This means that the water while in the beryllium tends to flow inward from the beryllium to the lattice. To prevent this disturbance in the water flow, the inner beryllium pieces are overlapped and closely fitted. A tight beryllium collar is fitted around the inner end of each of the HB thimbles and EB aluminum cans. In addition, the lower support casting has a ½-in. ledge around the edges of the center opening to prevent water from running under the beryllium into the lattice volume.

The calculations and experiments leading up to the above design of water flow system in the active lattice and reflector have been previously reported[11] and are given in Appendix 4. Table 2.7.A summarizes the results.

TABLE 2.7.A

LOCATION	PRESSURE DROP (psi)	FLOW (gpm)
Upper support casting	2	15,140
Upper assembly grid		2,600
Top and sides	9	1,920
Bottom	12	680
Fuel assemblies (23)	37	11,190
Beryllium assemblies (14)	37	31
Interstices		2,600
Beryllium reflector	20	2,920
Lower grid support	10	2,920
Lower assembly grid	19	2,600
Shim rods		
Cadmium	40	3,380
Thorium	40	2,980
Overall pressure drop	40	
Total flow		
With cadmium shim rods		20,120
With thorium shim rods		19,640

It is planned to make a final check on the water flow through the lattice and the reflector in the MTR before it is finally put into operation. Any flow discrepancies then found in the actual equipment can be corrected by enlarging or blocking water exit holes in the lower grid assembly.

2.7.2 Air Cooling. The thermal shield and the graphite are cooled by air drawn through them from the Reactor Building. The amount of heat that must be removed is indicated in Chap. 4; the external air system to provide proper air flow is described in Chap. 8.

The air enters at the top edges of the thermal shield through a system of 22 ducts which distributes it evenly to all four sides of the shield.[12] It is drawn out from the space above the graphite through two large holes in opposite corners of the upper thermal shields.

The major part of the air flows between the side plates of the thermal shield and then into the space between the bottom thermal shields. Holes in the upper plate of the bottom thermal shield distribute the air into the pebble zone and into the cooling holes of the permanent graphite. A small amount of this air goes outside the outer side plates of the thermal shield to help cool the concrete. By means of baffles in the inlet ducts some of the air is drawn between the two plates of the upper thermal shield and then through holes in the lower plate into the space above the graphite.

Since about 60% of the heat production in the graphite is in the pebble zone, the system has been designed to distribute the air in approximately this ratio between the pebble zone and the permanent graphite. In the pebble zone the air flows in the interstices between the pebbles, while in the graphite zone cooling is accomplished by allowing air to flow in the system of cooling holes illustrated in Fig. 2.7.A.

Since graphite begins to oxidize (0.0005 to 0.0009% per day) at about 570°F, this temperature was considered to be the maximum allowable for 45,000-kw operation. With this limit it was found[13] that the required cooling in the pebble zone could be obtained by an air flow of 840 lb/min, which requires a pressure drop of 26 in. of water. This gives an average exit air temperature of 205°F from the pebble zone if the air is heated 15°F in the thermal shield to 90°F. To this air is added the 684 lb/min flow through the permanent graphite and experimental facilities and the 174 lb/min to cool the top

[redacted]

DWG. 8605

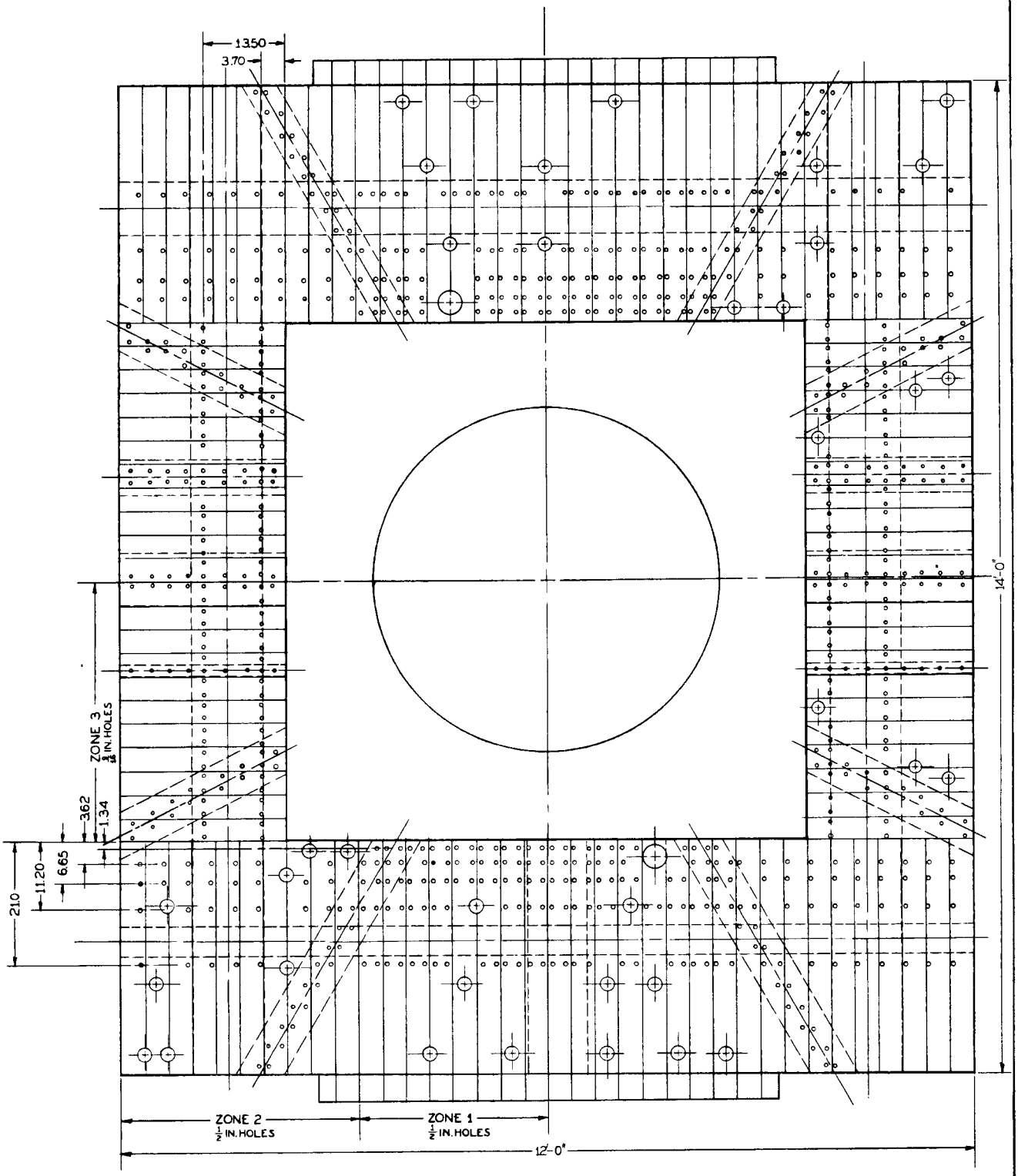

FIG. 2.7.A

HOLE PATTERN FOR THE GRAPHITE REFLECTOR

thermal shield. Thus the total air flow is approximately 1700 lb/min. For 75°F inlet air, the exit air temperatures are 150 and 185°F for reactor operation at 30,000 and 45,000 kw, respectively.

In addition to the graphite cooling, it is necessary to provide enough air to properly cool the liners of the experimental facility holes, i.e., the HB, DB, HG-9, and HT-1 holes and the vertical graphite holes in the pebble bed. Cooling in these liners is considered adequate if no local temperature exceeds 500°F.

The HG-9 liner is the most critical of these holes with regard to cooling. The aluminum liner for this facility is perforated top and bottom to match the graphite cooling holes in the plug.

It is calculated that the HB and DB liners will be sufficiently cooled by the normal air-cooling pattern and conduction along the liners, but some supplementary air is drawn between the liners and plugs from outside the reactor. This air flows into the pebble zone through perforations in the liners.

2.8 MONITORING EQUIPMENT

In order to obtain as much information as possible concerning the reactor and to supply some of the data required by the control system, monitor tubes and thermocouples will be built into the reactor structure. Their functions in the control system are discussed in Chap. 5 (Section 5.2.1); their physical structures and locations are described briefly below.

2.8.1 Monitor Tubes. The monitor tube system is designed to measure flow, temperature, and activity of the cooling water leaving the reactor lattice. To do this, 37 monitor tubes are inserted through and supported by the bottom plug. They extend up through the length of tank section E into the end boxes of the fuel elements. In general, of course, less than 37 fuel elements will be used, but the reactor lattice has space for this number plus eight shim rods (a 9 by 5 lattice array).

The structure of a monitor tube is shown in Fig. 2.8.A. It consists of a housing which acts as a support and enclosure for four small tubes. Three of these tubes are open at the end, two being used as pitot total and static

NOT CLASSIFIED

DDP-128

ITEM	DWG.	MATERIAL	DESCRIPTION	QTY.
			ASSY USED ON	
1	DDP-121	304 S.S.	Pitot Tip	1
2	DDP-122	304 S.S.	Extension Tube	1
3	DDP-123	304 S.S.	Reducing Bushing	1
4	DDP-124	304 S.S.	Spacer	1
5	DDP-125	304 S.S.	Housing	1
6	DDP-126	304 S.S.	Distributor Body	1
7		Lead	Chemical Lead ASTM B29-407	as needed
8		304 S.S.	1/8" O.D. 24ga. Tubing	as needed

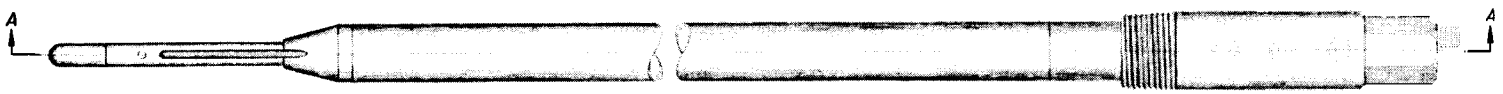

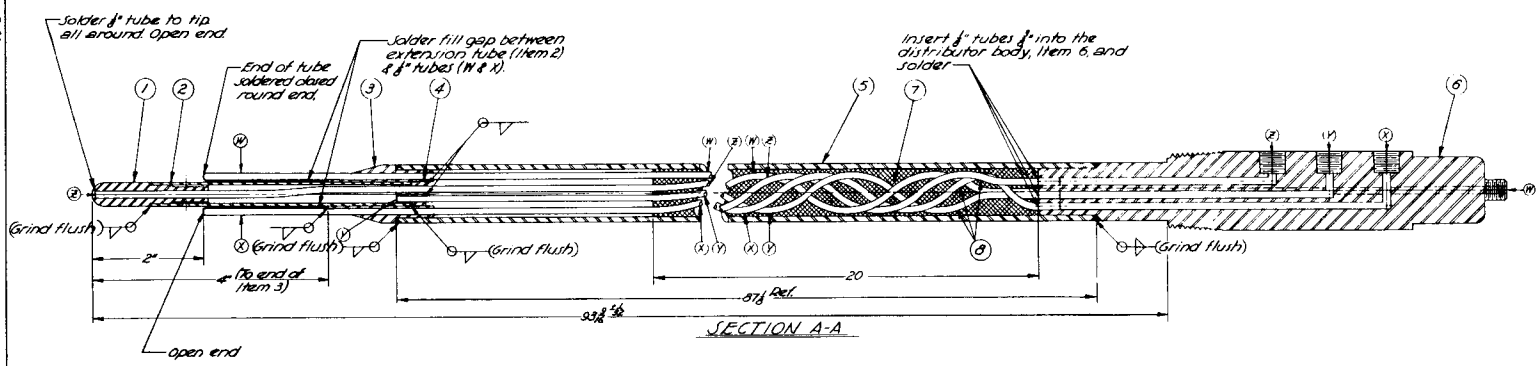

NOTES:

1. Each 1/8" tube must spiral thru at least 270° in housing.
2. Silver Solder (Hard)

LEGEND:

(W)—Thermocouple Sheath.
(X)—Activity Sample Line.
(Y)—Pitot Static Pressure Line.
(Z)—Pitot Total Pressure Line.

APPROVED FOR CONSTRUCTION

NOT CLASSIFIED

TOLERANCE UNLESS OTHERWISE SPECIFIED FRACTIONS ± 1/64 DECIMALS ± .005
BREAK ALL SHARP EDGES UNLESS OTHERWISE SPECIFIED.
FINISH MARKS ASA STANDARD
DO NOT SCALE THIS DRAWING

APPD	DATE
[illegible]	8-21-50
D.J.M.	8-11-50
[illegible]	8-23-50
NMM	8-23-50

OAK RIDGE NATIONAL LABORATORY
TECHNICAL DIV. — P.O. BOX P — OAK RIDGE, TENN.

MTR 105 BLDG

REACTOR TANK MONITOR TUBE ASSEMBLY

DRAWN BY C.N. Day — DATE 8-18-50 — SCALE 1" = 1"
CHECKED BY [illegible] — DATE 8-22-50 — DRAWING NO. DDP-128 — REV.

NO.	REVISION	APPD	DATE

FIG. 2.8 A

pressure lines and one as a means of obtaining water samples directly from the fuel elements. The fourth tube has a thermocouple inserted so as to be in contact with its closed end.

It will be noted in the drawing that the four tubes are spiraled down through 20 in. of lead to provide adequate shielding. The whole monitor tube is held in the bottom plug by the threaded section of the distributor body so that if necessary any or all of the monitor tubes can be removed or replaced.

2.8.2 Thermocouples. In order to obtain some information on the temperatures of the thermal and biological shields, thermocouples will be embedded at 47 points throughout the reactor structure. The locations of these 47 points are given in Table 2.8.A.[14] As a factor of safety, two thermocouples will be attached to the steel or embedded in the concrete at these points. It should be noted that the locations given in Table 2.8.A are recommended best points, but construction difficulties may cause a shift in some of these locations. As built drawings should be consulted for final placement data. It is currently planned to bring out the thermocouple leads in small conduits to junction boxes on the north and east faces of the reactor structure.

In addition to the above thermocouples, it is now planned to place two or more similar couples in the concrete near the HB and HT-1 liners. This will enable the operator to check on the concrete temperature when high-temperature experiments are being run in any of these holes.

2.9 HANDLING TOOLS

In the preceding sections of this chapter it has been tacitly assumed that some means will be available for handling various sections of the reactor through 20 ft of water. With the aid of experience gained on the mock-up, tools have been designed[15] and are being built to handle fuel assemblies, removable reflector pieces, regulating rods, shim rods, upper assembly grid, upper support casting, and spider support ring. In addition, a working platform to cover the top of the tank when open, underwater lights, a viewing tube, and reflector storage racks are also being built. Other tools which may be needed at a later date have been designed but are not at present being built. A brief summary of these tools with the reference drawings is given below.

TABLE 2.8.A

POINT IDENTIFICATION NO.*	ELEVATION		NORTH OF E-W CENTERLINE		SOUTH OF E-W CENTERLINE	EAST OF N-S CENTERLINE		WEST OF N-S CENTERLINE
1	100 ft	0 in.	6 ft	0½ in.		0 ft	10 in.	
2	100	0	6	7½		0	11	
3	100	0	6	9		1	1	
4	100	0	7	0½		1	10	
5	100	0	7	9		2	0	
6	100	0	8	6		2	2	
7	100	0	9	9		2	4	
8	100	0	11	0		2	6	
9	100	0	6	0½		6	11	
10	100	0	6	7½		7	6	
11	100	0	8	3		8	3	
12	100	0	6	6		8	9	
13	100	0	8	6		9	9	
14	100	0	3	5		7	0½	
15	100	0	3	4		8	0½	
16	100	0	3	6		8	9	
17	100	0	3	8		9	6	
18	100	0	3	10		11	0	
19	100	0	4	0		14	0	
20	100	0	0	8		7	10	
21	100	0			6 ft 0½ in.	0	10	
22	100	0	3	5½				8 ft 9 in.
23	106	5	0	0		3	9	
24	107	2	0	0		3	9	
25	107	11	0	0		3	9	
26	96	4	0	0		7	7½	
27	96	2	0	0		8	6	
28	94	8	0	0		3	10	
29	93	11	0	0		4	0	
30	93	2	0	0		4	2	
31	91	8	0	0		4	4	
32	91	0	0	0		4	6	
33	93	2	2	8		4	2	
34	107	11	2	9		3	9	
35	106	5	3	9		0	0	
36	107	2	3	9		0	0	
37	107	11	3	9		0	0	
38	110	6	8	6		0	0	
39	106	5	5	10		0	0	
40	106	2	6	0½		0	0	
41	95	5	6	4½		0	0	
42	95	6	4	0		0	0	
43	94	8	3	6		0	0	
44	94	8	4	0		0	0	
45	94	8	6	11½		0	0	
46	94	1	3	19		0	0	
47	93	3	3	9		0	0	

*Two thermocouples will be located at each point.

2.9.1 Design Summary. *(a) Compound Coupling "T" Handle, DRP-452.* To facilitate operation of tools with a compound shaft, a standard quick-disconnect coupling has been designed. A short handle with this standard coupling attached to one of the tool bodies will be used for pickup of the respective reactor component. One of four handles of various lengths will be used for lowering the part down the discharge chute. A lifting ring is welded on top of the handles as an adapter for the small hoist hook.

(b) Shim-rod Tool, DRP-440. Hooks, actuated by a toggle mechanism, engage the water slots on the shim rod when removal is desired. Compound "T" Handles Nos. 1 and 3 are to be used with this tool.

(c) Regulating-rod Tool, DRP-458. A ball-socket joint using the balls on the end of the regulating rod will be used to remove the rod. Compound "T" Handles Nos. 1 and 4 are to be used with this tool.

(d) Reflector-removal Tool, DRP-497. A ball-socket joint adapting the bullet-nosed pin on the end of removable reflector pieces will be used to lift these pieces. Two tools will be built since, if storage on the side of the tank is desired, a short body tool will be necessary, but, if discharge of the reflector piece is desired, a long body tool will be used. The lead plug in the discharge chute will be lifted with the short body tool.

Compound "T" Handles Nos. 1 and 2 will be used for putting "A" and "D" pieces in the storage racks, while Nos. 1 and 5 will be used for putting the lead plug in a storage rack or discharge "A" pieces.

(e) Fuel-removal Tool, DRP-461. Retractable pins inserted radially into the snouts on the ends of fuel assemblies and "L" type reflector pieces will be used to lift these reactor components. Compound "T" Handles Nos. 1 and 5 will be used with this tool.

(f) Top Working Platform, DRP-439. A 7-ft-diameter 1-ft-high cylinder will support a circular table that can be rotated manually and will serve as a working platform. A 2-ft-wide 5-ft-long slot in the table will permit vertical access to the reflector and fuel elements. The platform, which weighs approximately ¼ ton, will be equipped with lifting slings which attach to the upper assembly grid tool, which in normal operation will be the first and last tool used.

(g) Spider Support Lifting Sling, DRP-470. A collapsible sling fabricated from three ½-in. rods with turnbuckles for adjustment will be used for lifting the spider support ring.

(h) Upper Support Casting Wrench Assembly, DRP-490. A wrench which has an inner rod that screws into the bolt head will be used for removing the upper support casting bolts.

(i) Viewing Tube Assembly, DRP-549. A tube with a plastic sight glass is to be mounted on the working platform. The lower end of this tube will extend below the water in the tank, thus allowing better vision.

(j) Upper Assembly Grid Tool, DRP-489. A tool with hooks on the end will catch the toggle mechanism and lift the upper assembly grids. The assembly grids will be temporarily stored on platforms oriented as shown on DRP-558 on the spider support ring.

(k) Upper Support Casting Tool, DRP-492. This tool hooks horizontal pins on the casting main support arms.

(l) Underwater-light Wiring Diagram, DRP-530. A variable autotransformer and a 110-watt 20-volt center-tap transformer will supply four underwater lights with power.

(m) Underwater-light Assembly. A watertight steel housing with a transparent plastic lens will encase the sealed-beam lights to prevent accidental breakage.

(n) "A" Piece Rack, DRP-526; Discharge Tube Plug Rack, DRP-528; "D" Piece Rack, DRP-529. Racks will be bolted to the spider support ring for storage of reflector pieces. Orientation of the racks is shown in DRP-558.

(o) Regulating-rod Bearing and "E" Piece Tool, DRP-476.* A tool with spreading pawls will be used to pick up the regulating-rod bearings and the "E" pieces. It is intended that one tool be used for all bearings. Since there is a 6-ft difference in elevation of the bearings, the tool is a compromise as to overall length. Compound "T" Handles Nos. 1 and 5 will be used with this tool.

(p) Lower Assembly Grid Tool, DRP-546.* Like the regulating-rod bearing tool, this tool has spreading pawls for lifting. This tool is used with compound "T" Handle No. 1.

*Will be built at a later date.

(q)* *Lower Guide Grid Wrench, DRP-539.* A wrench which has an inner rod that screws into the bolt head will be used to remove the lower guide grid bolts.

(r)* *Shock-absorber Plate Wrench, DRP-536.* This tool is similar to the wrench above.

(s)* *Torque Wrench Extension for Sockets, DRP-491.* This tool is used to adapt a torque wrench to the bolts 10 to 30 ft away.

(t)* *Shock-absorber Support-plate Tool, DRP-464.* This tool consists of four hooks on an extension rod which will engage eye bolts on the plate for lifting.

(u)* *Lower Guide Grid Tool, DRP-493.* This tool is similar to the shock-absorber support plate tool.

(v)* *Tapped Segment Ring Lifting Tool, DRP-460.* This tool is used for lifting various segment rings on the reactor tank.

*Will be built at a later date.

2.10 REFERENCE REPORTS

(1) Gill, J. P., *MTR Report, Tank Sections A and E,* ORNL CF-49-11-217, November 22, 1949.

(2) Gall, W. R., *MTR Report on Reactor Structural Steel,* ORNL CF-49-11-273, November 29, 1949.

(3) Engberg, R. E., *Shim-safety Rod Lower Shock Absorber Position Indicator System, MTR Design Report, Controls,* ORNL CF-51-3-68, March 30, 1951.

(4) Zapp, F. C., *MTR Report on Graphite Reflector,* ORNL CF-49-10-88, October 6, 1949; *Addendum No. 1 on Graphite Report,* ORNL CF-49-11-176, November 17, 1949; *Addendum No. 2 on Graphite Report,* ORNL CF-50-2-143, February 20, 1950; *Addendum No. 3 on Graphite Report,* ORNL CF-50-3-171, March 31, 1950.

(5) Lane, J. A., *Induced Activity in Graphite,* ORNL CF-49-10-183, October 18, 1949.

(6) Lane, J. A., *Thermal Column Graphite,* ORNL CF-50-1-20, January 5, 1950.

(7) Zapp, F. C., *Graphite for the Materials Testing Reactor,* ORNL CF-50-1-30, January 10, 1950.

(8) Shell, W. E., *Thermal Shield for the MTR*, ORNL CF-50-1-125, January 25, 1950.

(9) McWherter, J. R., *Thermal Stress in Concrete Shield, MTR Project*, ORNL CF-49-9-69, September 8, 1949.

(10) Briggs, R. B., *Technical Division Section II, Report for Period July 15 - September 15, 1947*, ORNL CF-47-9-560, September 15, 1947.

(11) Kasper, S., *Water Flow in the MTR*, ORNL CF-50-6-102, June 15, 1950.

(12) Gall, W. R., *MTR Report on Internal Air System*, ORNL CF-49-11-208, November 21, 1949.

(13) Briggs, R. B., *Cooling of the Graphite Reflector for the MTR*, ORNL CF-50-3-102, March 20, 1950; *Cooling of the Graphite Reflector for the MTR*, ORNL CF-50-1-45, January 10, 1950.

(14) McWherter, J. R., *Permanent Thermocouples in the MTR Structure*, ORNL CF-50-7-142, July 27, 1950.

(15) McWherter, J. R., *MTR Reactor Tank Handling Tool Design*, ORNL CF-51-1-19, January 4, 1951.

2.11 REFERENCE DRAWINGS

DWG. NO.	TITLE
BKC-3150-565-1	Neutron Curtain System, General Arrangement - Reactor Structure
BKC-3150-565-2	Neutron Curtain System, Sections and Details - Reactor Structure
ORNL TD-1339	Controls Assembly
ORNL TD-1399	General Assembly
ORNL DRP-392	Bottom Plug Vertical Rabbit Assembly
BKC-3150-502-1 through 8 and 10	Thermal Shield
BKC-3150-502-9 and 13 through 18	Air Ducts
BKC-3150-502-19 and 20	Pebble Bins
BKC-3150-503-1 through 10	Thermal Shield
BKC-3150-504-1 through 34	Graphite

DWG. #10197 [redacted]

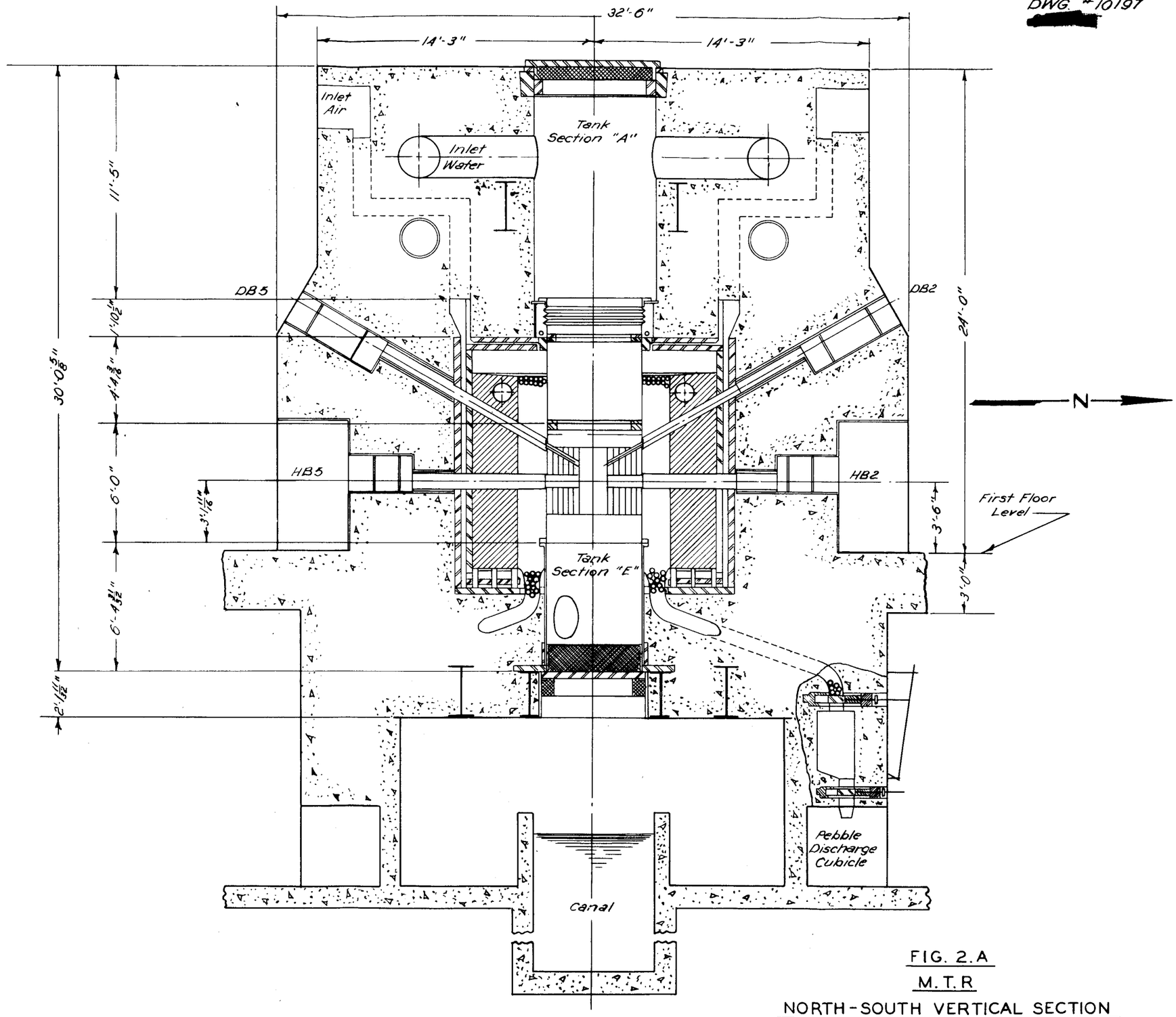

FIG. 2.A

M.T.R

NORTH-SOUTH VERTICAL SECTION

OAK RIDGE NATIONAL LABORATORY

DWG. #10198 [redacted]

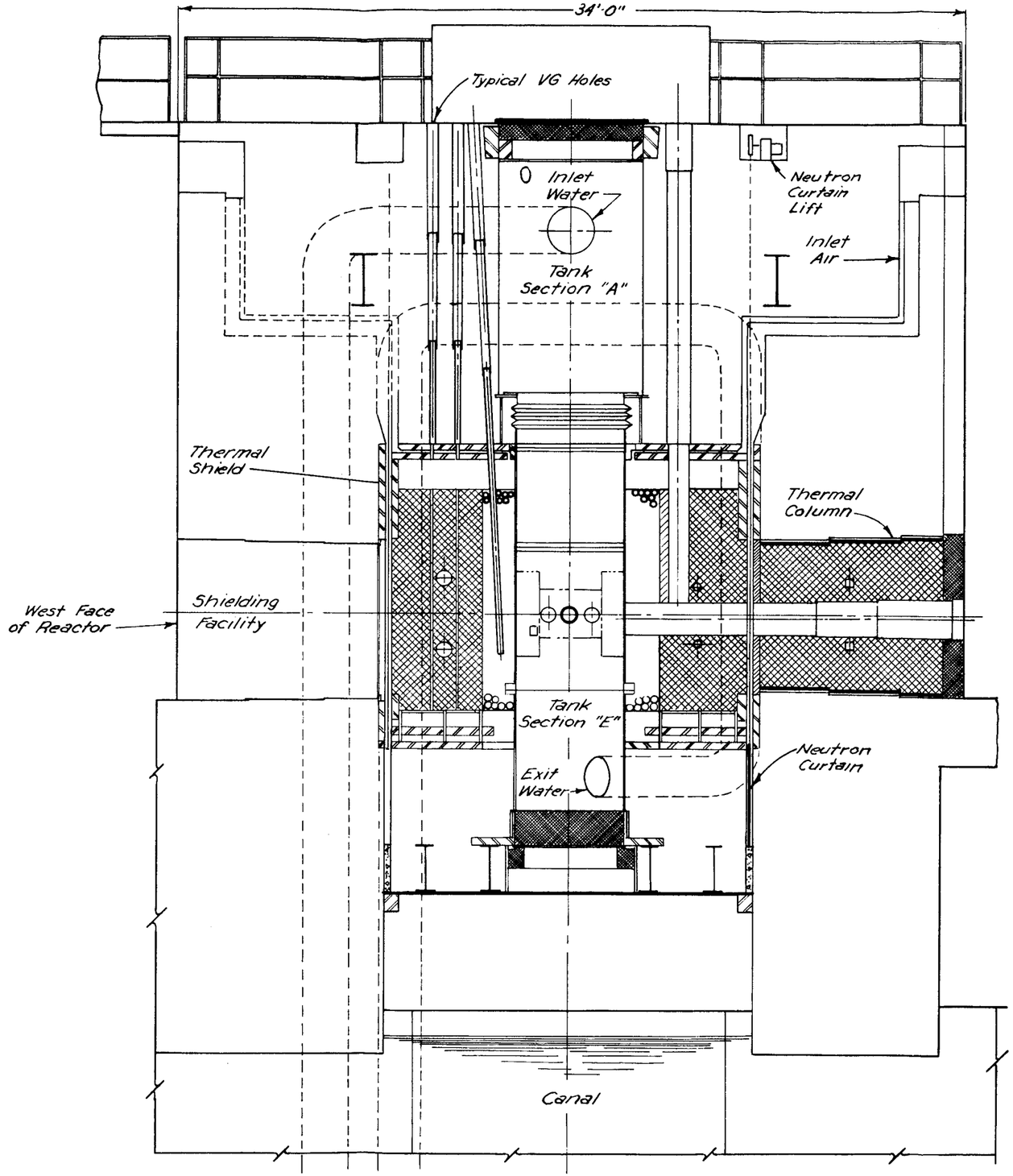

FIG. 2.B

M.T.R.

EAST-WEST VERTICAL SECTION

OAK RIDGE NATIONAL LABORATORY

DWG. #10199 [redacted]

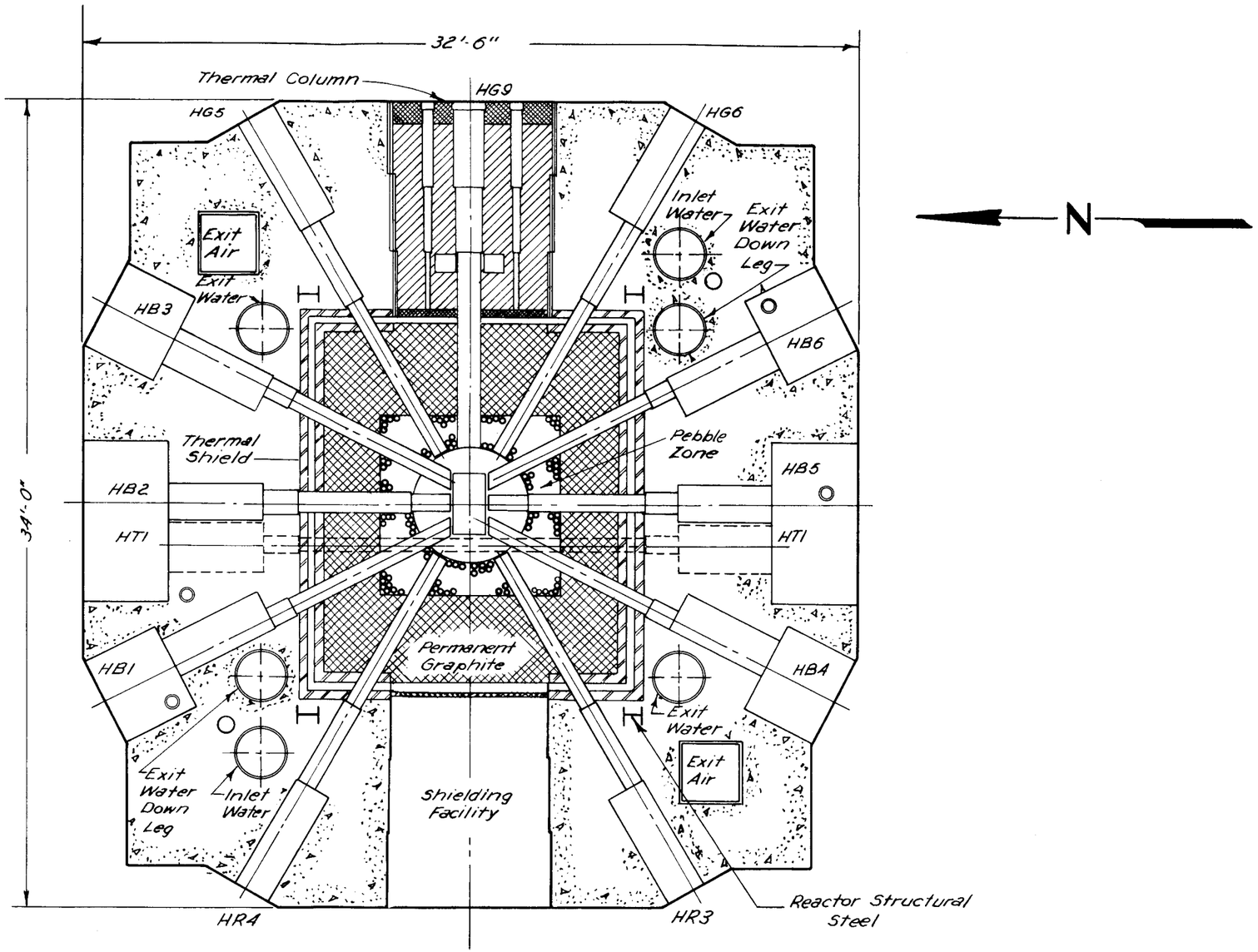

FIG. 2.C
M.T.R
HORIZONTAL SECTION

OAK RIDGE NATIONAL LABORATORY

DWG. NO. 10394 [redacted]

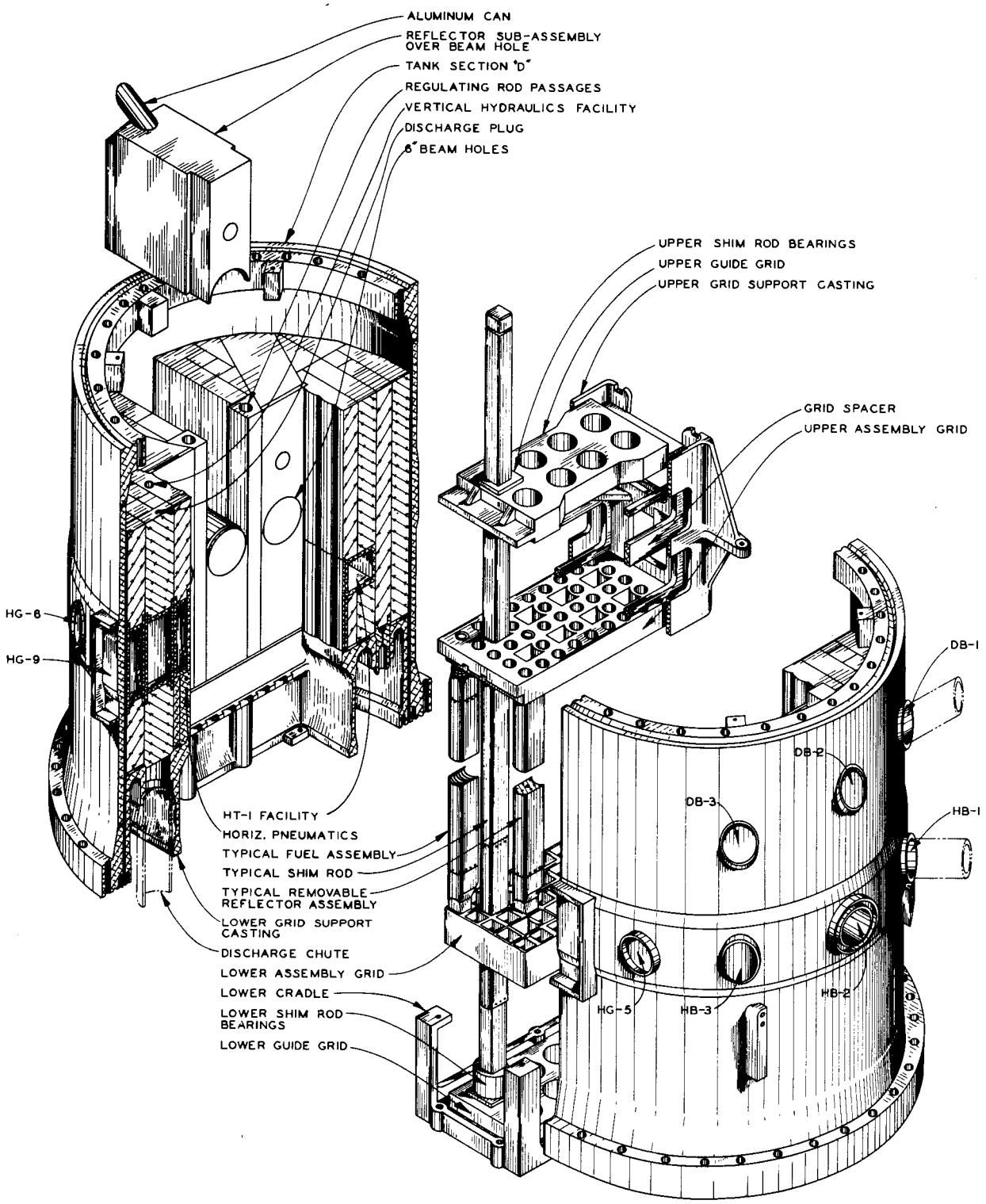

FIG.-2.D

PICTORIAL CROSS SECTION

REACTOR TANK

OAK RIDGE NATIONAL LABORATORY

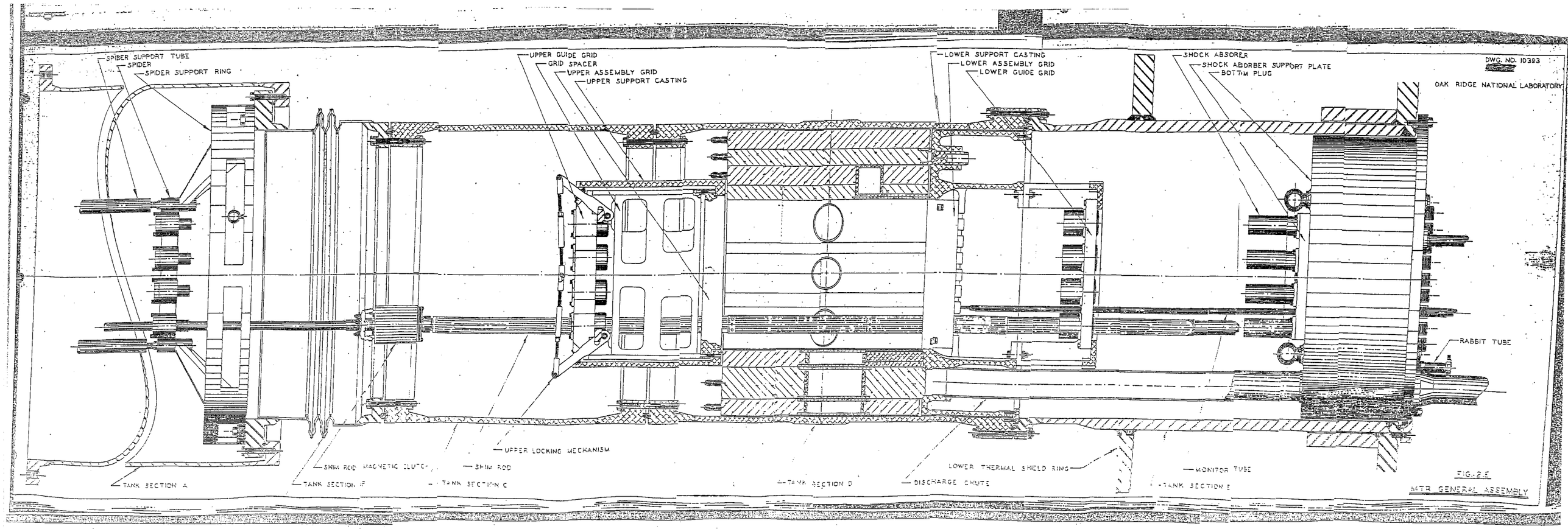
SPIDER SUPPORT TUBE
SPIDER
SPIDER SUPPORT RING
UPPER GUIDE GRID
GRID SPACER
UPPER ASSEMBLY GRID
UPPER SUPPORT CASTING
LOWER SUPPORT CASTING
LOWER ASSEMBLY GRID
LOWER GUIDE GRID
SHOCK ABSORER
SHOCK ABORBER SUPPORT PLATE
BOTTOM PLUG
DWG. NO. 10393
OAK RIDGE NATIONAL LABORATORY
RABBIT TUBE
UPPER LOCKING MECHANISM
SHIM ROD MAGNETIC CLUTCH
SHIM ROD
LOWER THERMAL SHIELD RING
MONITOR TUBE
TANK SECTION A
TANK SECTION F
TANK SECTION C
TANK SECTION D
DISCHARGE CHUTE
TANK SECTION E
FIG. 2.E
MTR GENERAL ASSEMBLY

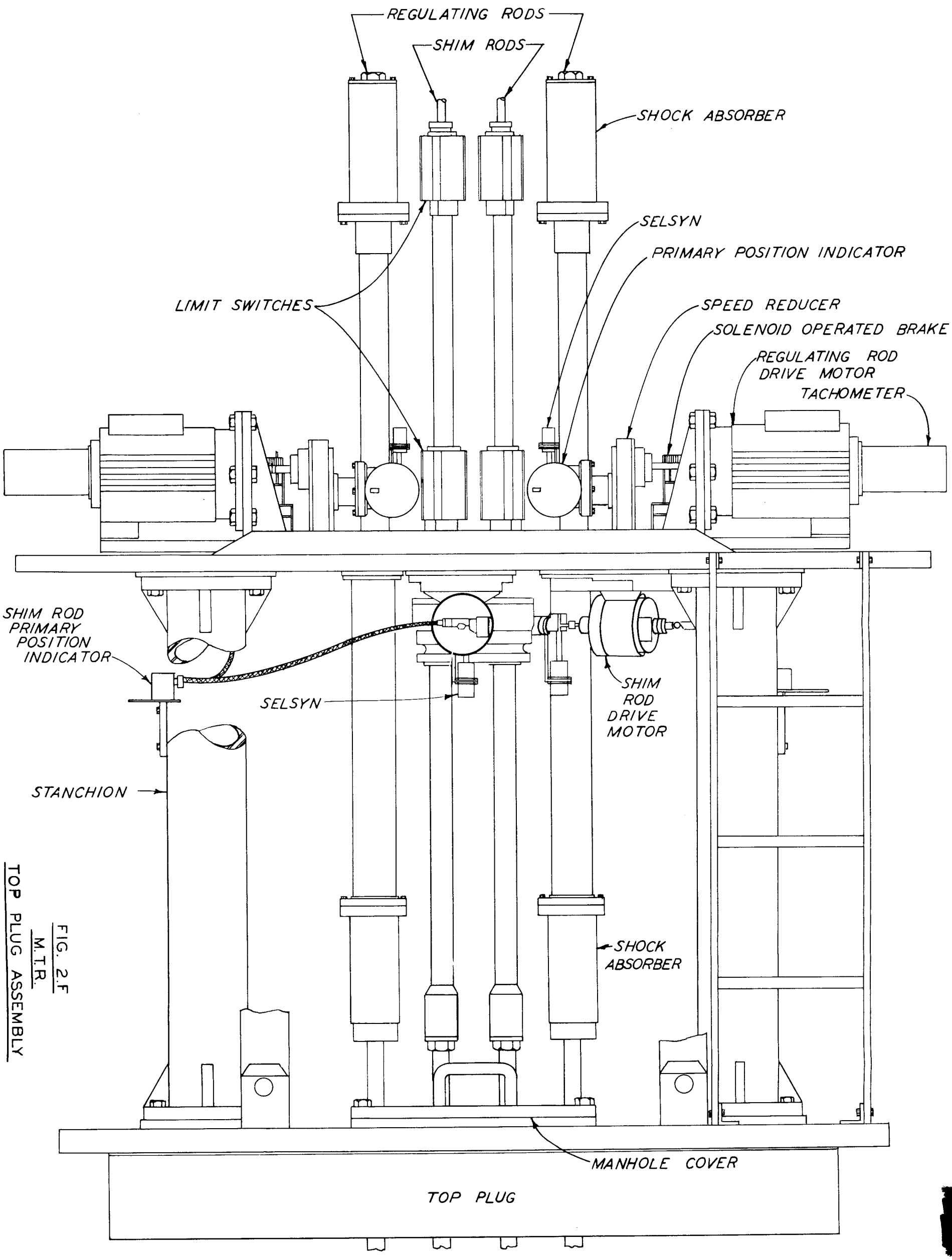

FIG. 2.F
M.T.R.
TOP PLUG ASSEMBLY

OAK RIDGE NATIONAL LABORATORY

DWG. [redacted] #10392

2 53

Chapter 3

EXPERIMENTAL FACILITIES

In order to fulfill the purpose of the MTR the experimental facilities provided have been designed to be as varied and as flexible as possible. The locations of the various facilities are shown in Figs. 3.A through 3.F,* and the relationship of the side holes to the Reactor Building is shown in Fig. 3.G. The location of the holes relative to the active lattice has been shown in Figs. 2.A through 2.D.

The experimental facilities and the estimated fluxes obtainable at 30-megawatt operation are listed in Table 3.A. It must be emphasized that the fluxes given are only estimates based on the best data available before actual operation of the MTR. It is hoped that a supplement to this report will be issued after actual measurements have been made in the reactor.

3.1 HORIZONTAL AND DOWN BEAM EXPERIMENTAL HOLES**

3.1.1 Introduction. There are 17 large experimental holes that lead from the reactor faces either to the reactor tank wall or to the active lattice. These holes are treated separately from the vertical graphite holes (see Section 3.4) because their sizes and locations require special design attenuation and handling techniques. They are characterized by the presence in each of a special radiation door, the sole purpose of which is to minimize danger to personnel in the Reactor Building during plug-handling operations. Since these holes provide the largest volumes of high flux in the reactor, they are the most dangerous and their use will probably be correspondingly difficult and complicated. They are as follows:

(1) Six Horizontal Beam Holes, HB-1 Through HB-6. These holes extend horizontally from the reactor face to the active lattice. Holes HB-2 and HB-5 are 8 in. in diameter to the reactor tank wall and 6 in. in diameter from the reactor tank wall to the active lattice. Holes HB-1, 3, 4, and 6 are 6 in. in diameter throughout.

(2) Six Down Beam Holes, DB-1 Through DB-6. These are 6-in.-diameter inclined holes which extend from the upper north and south faces to the reactor tank. They are located directly above the horizontal beam holes. Inside the tank wall they are essentially extended to the lattice by 2-in.-I.D. sealed empty aluminum cans in the beryllium reflector.

*For convenience in reading, Figs. 3.A through 3.G are placed at the end of this chapter.

**Section 3.1, except 3.1.5, ANL contribution.

TABLE 3.A

Summary of Experimental Facilities

TYPE OF HOLE	FACILITY DESIGNATION	SIZE	APPROACH	ESTIMATED FLUX, MAX. (neutrons/cm^2-sec)	
				THERMAL	FAST*
Beam	HB 1, 2, 3	6 in. I.D. in Be	Horizontal to core edge**	5×10^{14}	7×10^{13}
Beam	HB 4, 5, 6	6-in. I.D. in Be	Horizontal to Be in active section	2.8×10^{14}	2×10^{11}
Beam	DB 1, 2, 3, 4, 5, 6	6 in. I.D.	Inclined down to tank, 2-in.-I.D. can channel to core	4×10^{13}	5×10^{10} (DB2 only)
Beam	HG 5, 6	6-in. I.D.	Horizontal to tank wall	8×10^{13}	
Beam	HG 9	10 by 16 in.	Horizontal to tank wall; 5- by 12-in. fast-neutron channel to core	8×10^{13}	4×10^{12}
Access	VG 9	10 by 10 in.	Vertical from top access to HG-9	3×10^{13}	
Thermal column	T 2	6 by 6 ft	Horizontal to Pb window	1×10^{12}	
Thermal	T 2-H 1, 2	4 by 4 in.	East west horizontal across T 2	2×10^{10}	
Thermal	T 2-H 3, 4, 5, 6, 7, 8	4 by 4 in.	Horizontal within and parallel to T 2	6×10^{11}	
Thermal	T 2-V 1, 2	12 by 12 in.	Vertical from top of reactor to T-2	2×10^{11}	
Through	HT 1	4 7/8 by 4 7/8 in.	Horizontal through reactor tank	1.8×10^{14}	3×10^{13}
Through	HT 2, 3	10¾-in. I.D.	East west horizontal through graphite	10^{13}	
Through	HG 1, 2	8 in. I.D.	North south horizontal through graphite	10^{13}	
Through	HG 3, 4	4 in. I.D.	North-south horizontal through graphite	10^{13}	
Through	VT 2	2¾ by 2¾ in.	Vertical through shim rod hole	2.5×10^{14}	1×10^{14}
Through	VG 2, 4	4 in. I.D.	Vertical through graphite	3×10^{13}	
Pneumatic rabbit	HR 1, 2	1 in. I.D.	Horizontal through reactor tank	1.6×10^{14}	4×10^{13}
Pneumatic rabbit	HR 3, 4	4-in. I.D.	Horizontal to reactor tank	8×10^{13}	
Hydraulic rabbit	VH 3, 4	1½-in. I.D.	Vertical from top in spare regulating rod holes	2.5×10^{14}	10^{13}
Hydraulic rabbit	VH 1, 2	1-in. I.D.	Vertical from basement in Be	2.4×10^{14}	

*Neutrons having energies greater than 1 Mev.

**One can be for ¼ mile beam, and one for neutron spectrometer if desired.

TABLE 3-A (Cont'd)

TYPE OF HOLE	FACILITY DESIGNATION	SIZE	APPROACH	ESTIMATED FLUX, MAX. (neutrons/cm^2-sec)	
				THERMAL	FAST*
Vertical	VG 1, 3, 5, 6	4 in. I.D.	Slant from top into pebble zone	3×10^{13}	
Vertical	VG 7, 10, 14, 16, 20	2½ in. I.D.	Slant from top into pebble zone	5×10^{13}	
Vertical	VG 23, 26, 29, 41, 43, 45, 55, 57-62	2 in. I.D.	Vertical from top into permanent graphite	10^{13} to 10^{12}	
Vertical	VC 1, 9, 11, 13	2 in. I.D.	Vertical from top into concrete		
Fast flux	About 40 Be assemblies* removable reflector pieces	3 by 3 in.	Vertical from top tank***	5×10^{14}	7×10^{13}
Fast flux	About 15 Be assemblies, removable core pieces	3 by 3 in.	Vertical from top tank***	5×10^{14}	7×10^{13}
Gamma	GT 1, 2	6 in. I.D.	Vertical from top γ-ray thimbles in water	500 r/hr	
Shielding	Facility		Horizontal from west	10^{12}	
Instrument	VN 1, 2, 3, 4, 5, 6	2½ in. I.D.	Slant from top	5×10^{13}	
Instrument	VG 8, 15	2 in. I.D.	Slant from top	5×10^{13}	
Instrument	VG 27, 28, 42, 44, 56	2 in. I.D.	Vertical from top	10^{13} to 10^{12}	

***Charged or discharged only when reactor is shut down and top plug is removed.

Note: These estimated neutron-flux values are based on beryllium or graphite (according to material penetrated) in the experimental holes. Actually, experimental apparatus and samples will cause local "sinks" and reduce the flux attainable for a particular experiment.

(3) **Two Horizontal Graphite Holes, HG-5 and HG-6.** These are 6-in.-diameter horizontal holes which extend to the reactor tank.

(4) **Two Horizontal Rabbit Holes, HR-3 and HR-4.** These are 4-in.-diameter horizontal holes which extend to the reactor tank. (The 1-in. holes HR-1 and HR-2 are discussed in Section 3.5.)

(5) One Horizontal Through Hole, HT-1. This is a hole 4-11/16 in. square which extends from one reactor face to the opposite face. It goes through the reactor tank and lies adjacent to one side of the active lattice.

In formulating the design of these holes, considerable thought was given to the future needs of the experimenters who will use these facilities. Other factors that had a strong influence on the experimental hole design are radiation hazards, material selection, cooling requirements, and the configuration of the reactor itself.

Several design proposals were prepared and the relative merits of each were consolidated into the design illustrated in Fig. 3.1.A. The hole liner and its components as shown are essentially the same for all the beam holes listed above. Designs of the dummy plugs used in the different holes are shown in Figs. 3.1.B, C, and D.

3.1.2 Beam Hole Liners and Components. The prime objective in design of the hole liner and its components was flexibility. It was necessary therefore to consider the adaptability of holes to experimental plugs of varying design and the maintenance, repair, or replacement of the hole components, including the removable sections of the liners. The configuration and sizes of the hole liners in the biological shield are dictated primarily by the location and size of the radiation doors. The outer shields, the radiation doors and drive mechanisms, the tapered portion of the liners, and the graphite zone liners have been made removable with the hope that radiation levels will permit realization of additional flexibility.

Graphite Zone Liner. The graphite zone liner is the portion of the experimental hole liner which extends from the thermal shield to the reactor tank. It is a ¼-in.-thick aluminum tube secured at one end to the removable steel liner and supported at the other end by a pilot ring on the reactor tank. The liner is removable and is not permanently secured to the reactor tank because this tank is designed as a removable component.

NOT CLASSIFIED

Dwg. # 10751

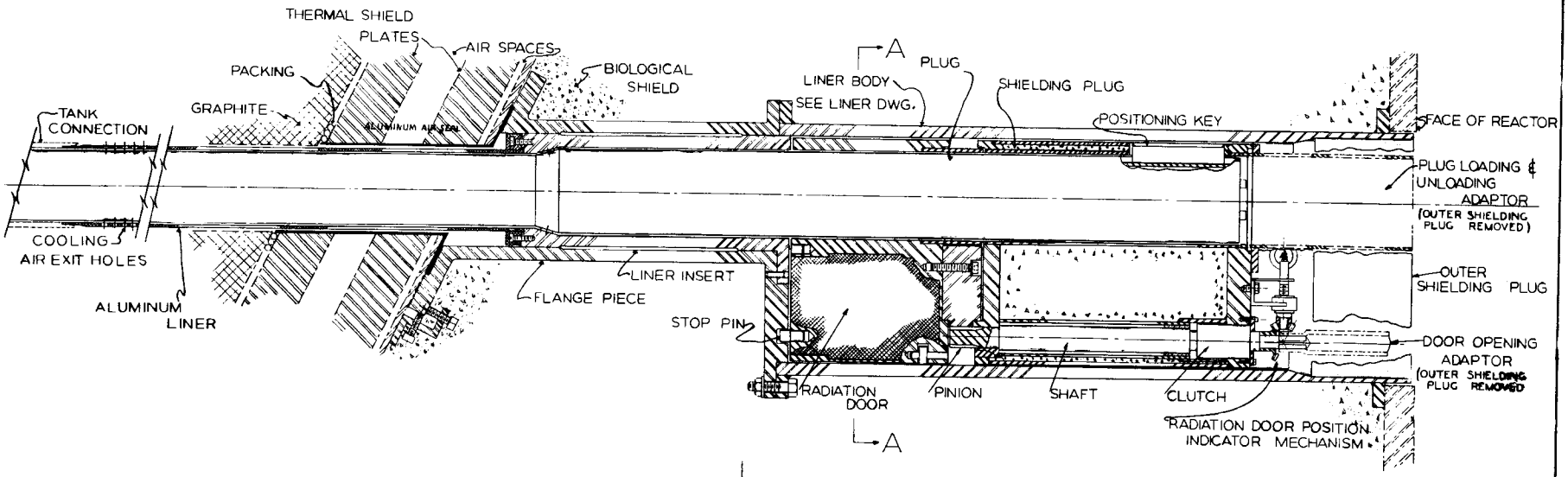

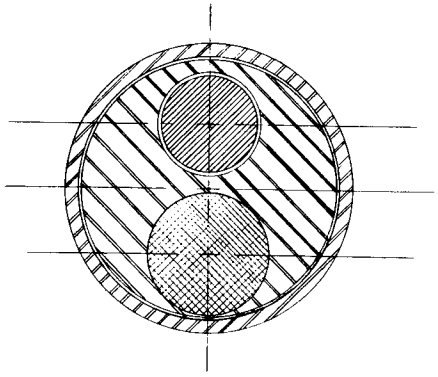

SECTION AA

TOLERANCES: FRACTIONAL TOL. ± 1/32; DECIMAL TOL. ± .005; ANGLE ± 1/2°; ALL DIMENSIONS TO BE SHARP UNLESS OTHERWISE NOTED	APPROVED FOR CONST.		ARGONNE NATIONAL LABORATORY					
	CHIEF ENG.		This drawing is the property of the Argonne National Laboratory					
	CHIEF DRAFTSMAN							
	CHECKED							
	DRAWN	C C 12-19-50	SCALE NONE	MATL.	NO. REQD.			
	DRAFTING REPRESENTATIVE	HUTTER LEYSE						

STA.	CHANGE	DATE	BY
PART	TYPICAL BEAM HOLE		
ASSEMBLY	LINER AND COMPONENTS		
SHEET	DRWG. NO.	TYPE NO.	
-	FIG. 3.1.A		

NOT CLASSIFIED

Dwg. #10752

NOTE:
ALL DIMENSIONS SHOWN ARE TYPICAL
OF WATER-COOLED PLUGS

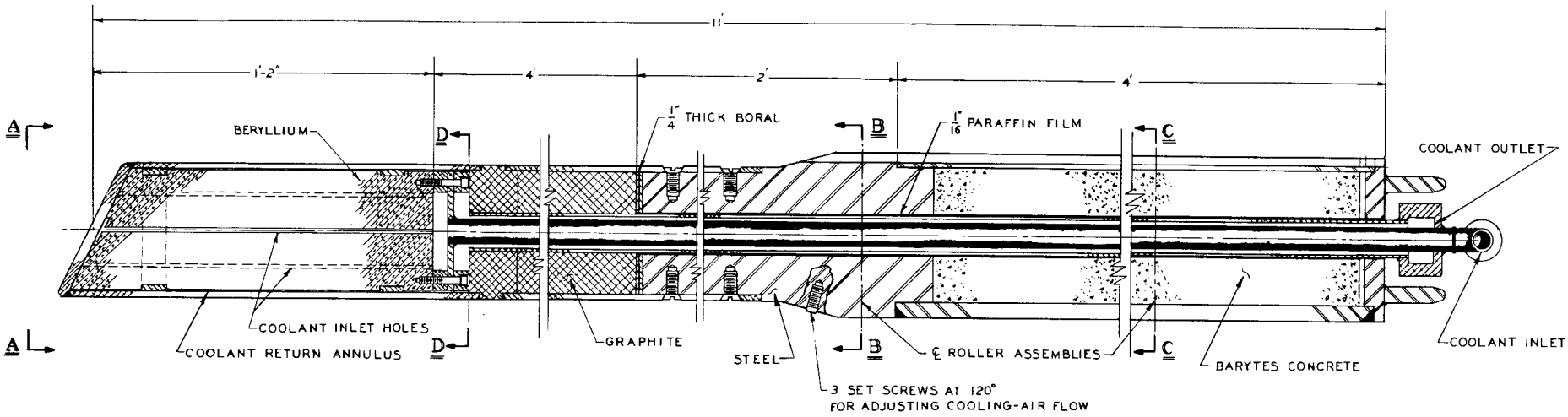

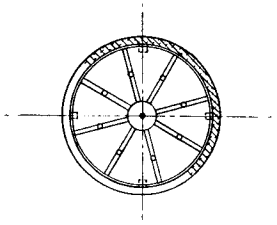

SECTION A
(SHOWN WITHOUT END PLATE)

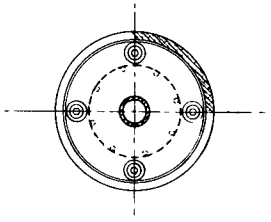

SECTION D

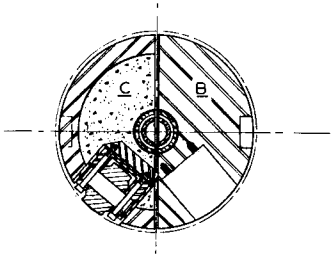

SECTION B & C

TOLERANCES: FRACTIONAL TOL. ± 1/32; DECIMAL TOL. ± .005; ANGLE ± 1/2°; ALL SURFACES TO HAVE FINISH (125 MICRO INCH) OR AS SECURED FROM. UNLESS OTHERWISE NOTED	APPROVED FOR CONST. / CHIEF ENG. / CHIEF DRAFTSMAN / CHECKED / DRAWN F.T. 1-12-51 / REPRESENTATIVE LEYSE / HUTTER	ARGONNE NATIONAL LABORATORY. This drawing is the property of the Argonne National Laboratory	SYM. / CHANGE / DATE / BY	PART TYPICAL BEAM HOLE	
		SCALE 1"=2" / MATL. / NO. REQD.		ASSEMBLY WATER-COOLED DUMMY PLUG	
			SHEET OF	DRWG. NO. FIG. 3.1.B	ITEM NO.

NOT CLASSIFIED

Dwg. #10750

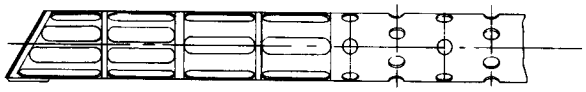

ARRANGEMENT OF TIP COOLING OPENINGS

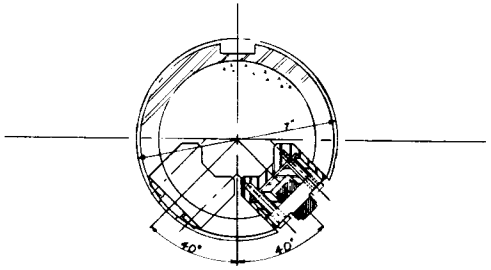

SECTION A - ROLLER ASSEMBLIES

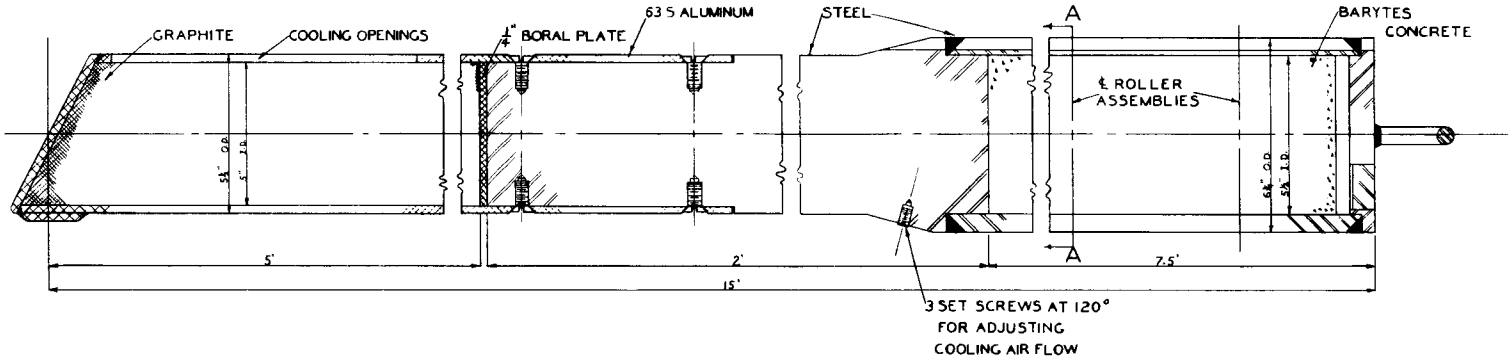

NOTE DIMENSIONS ARE TYPICAL OF ALL AIR COOLED PLUGS

TOLERANCES: FRACTIONAL TOL. ± 1/64; DECIMAL TOL. ± .005; ANGLE ± 1/2°; ALL DIMENSIONS IN SAME DECIMAL OR AS DIGITED FORM. UNLESS OTHERWISE NOTED	APPROVED FOR CONST.		ARGONNE NATIONAL LABORATORY	ETC.	CHANGE	DATE	BY
	CHIEF ENG.		This drawing is the property of the Argonne National Laboratory	PART	TYPICAL BEAM HOLE		
	CHIEF DRAFTSMAN			ASSEMBLY	AIR COOLED DUMMY PLUG		
	CHECKED			SCALE NONE	DATE	DWG. PERIOD.	
	DRAWN HUTTIN	C.C. 1-10-54		SHEET	DRWG. NO. FIG. 3.1.C		ITEM NO.
	GROUP	SUPERVISOR LEIST					

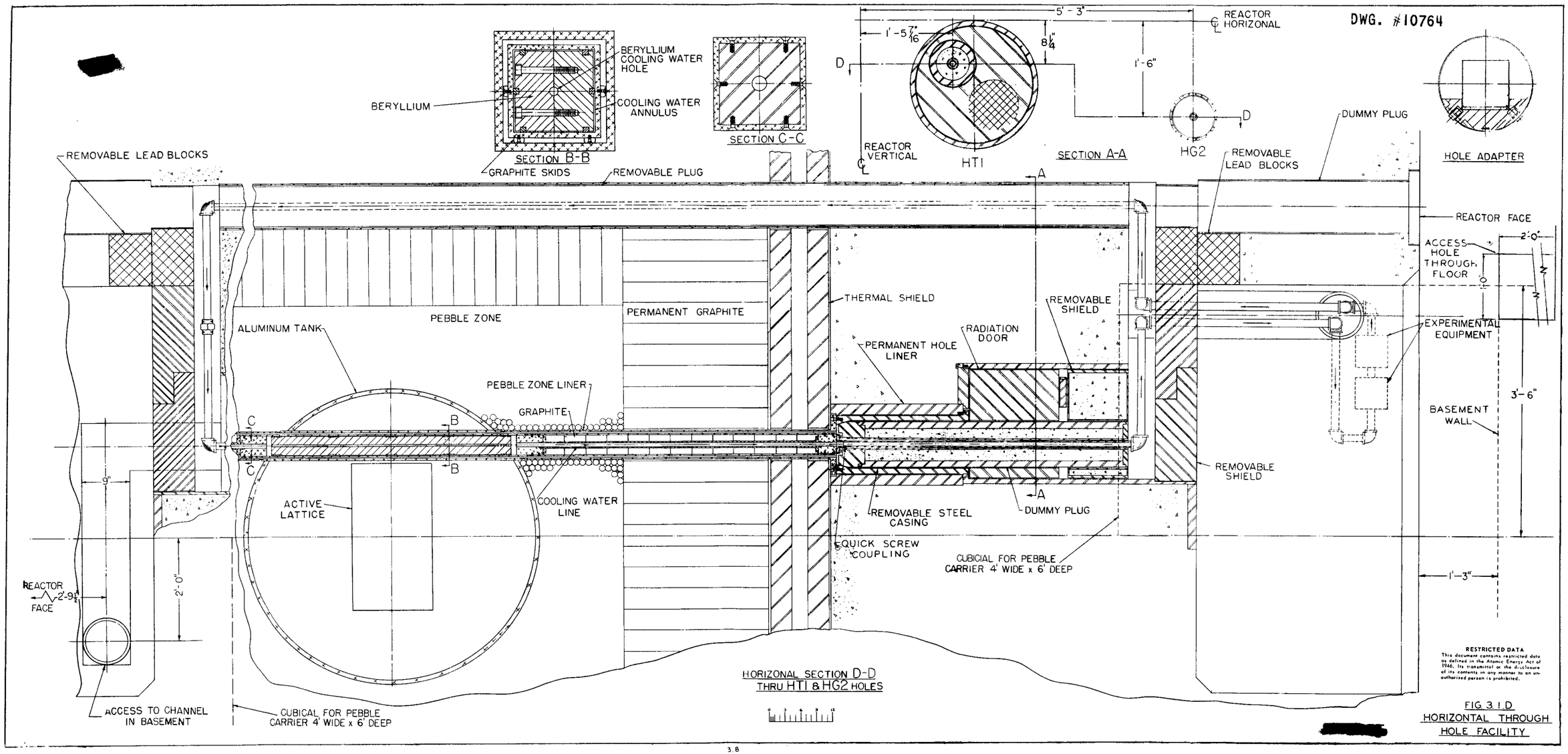

FIG 3.1.D
HORIZONTAL THROUGH HOLE FACILITY

[redacted]

The liner is constructed of aluminum because of its relatively low long-lived induced activity.[1] Aluminum also has a relatively low neutron absorption cross-section, which is desirable for reactor component materials in the region of the reactor tank. In this regard a compromise had to be made in the selection of 52S alloy in preference to 2S, 3S, 61S, or 63S owing to the former's substantial advantage in high-temperature physical properties.

Cooling of the liner is accomplished primarily by the air that cools the graphite reflector. In the pebble zone the liner is exposed directly to the air flow, while in the permanent graphite zone numerous vertical cooling holes in the graphite provide for air circulation through an annulus between the liner and the graphite. Secondary cooling is provided by air drawn in from the reactor face through an annulus between the plug and the liner and exhausted into the pebble zone by means of a suitable hole pattern in the liner near the reactor tank. The mechanical design and selection of alloy were based on a maximum temperature of 570°F. A thermocouple provided on each HB liner at a point near the reactor tank permits the checking of the maximum liner temperature. This is particularly important when a high temperature experiment is conducted in the experimental hole. The thermocouple leads are carried out the beam hole to the reactor face. Instruments for reading the thermocouples are not provided as permanent fixtures.

Sufficient endwise clearance, 3/8 in., between the end of the liner and the tank wall is provided to allow for thermal expansion; 1/32 in. is allowed for radial expansion of the tube within the pilot ring.

Removable Steel Liner. The removable steel liner extends from the thermal shield to the radiation door.

Experimentation and calculation have shown that to prevent neutron streaming through the annulus formed by the dummy plug and the hole liner, two steps in the annulus are required.[2] One of these is as close to the thermal shield as practical and the second is near the outer face of the concrete shield. The tapered portion of the hole forms the first step, and the removable steel shield at the outer face forms the second step.

This liner section is removable primarily because to it is secured the graphite zone liner, which must be removable. Secondarily it is desired that this liner be removable since it may be found desirable to change the configuration of the hole in order to serve special experimental requirements.

It is anticipated that the induced activity of the steel liner will be low enough to permit handling with standard safety measures. Also, owing to the dry air conditions prevailing at the site, ordinary carbon steel is used with no attempt at corrosion prevention other than the application of a light film of oil. The oils recommended for this purpose, selected because of their good resistance to radiation damage, are Dow Corning Silicone Fluids Nos. 701, 702, 703, and 710 and Carbide and Carbon Chemicals Corporation Ucon Lubricants 50-HB-280-X, DLB-265-BX, 75-H-480, LB-300-X. Paints and platings were rejected due to the probability of flaking. The same holds true in respect to all other beam hole components in which steel is exposed only to air.

Permanent Steel Liner. The permanent steel liner provides a housing for the removable steel liner, the radiation door, the removable concrete shield, and the removable steel shield (see Fig. 3.1.A). For the 6-in. beam holes it consists of two carbon steel cylinders. One is approximately 22 in. in diameter, and the other is about 11 in. in diameter. The 11-in.-diameter cylinder is eccentrically secured to an end plate on the large cylinder; it houses the removable steel liner. The large cylinder houses the radiation door, the removable concrete shield, and the removable steel shield.

The permanent steel liners of the HB holes are provided with annular air spaces to serve as heat dams. Also wrapped around the outer surface of the liners and embedded in the biological shield concrete are cooling-water coils. The heat dams and cooling coils prevent overheating of the concrete when these experimental holes are used for high-temperature experiments. To provide for the determination of concrete temperatures, thermocouples are embedded in the concrete near the cooling coils.

Radiation Door. A lead door within the reactor structure is provided to attenuate radiation from the experimental hole when the plug is removed.[2] The thickness of the door has been calculated to reduce γ-ray activity to tolerance during reactor shutdown. Opening and closing of the door are accomplished from the reactor face.

After considerable investigation of door types, the radiation door shown in Fig. 3.1.A was adopted. It is a round billet of steel with two eccentrically located holes; one hole forms a portion of the beam hole while the other is filled with lead and provides a radiation shield. The door is free to

rotate inside the large steel liner by means of several rollers located in recesses in its surface. A gear sector bolted to the door and driven by a pinion and shaft provides the drive. The drive shaft extends to the reactor face, thereby permitting remote operation by an electric motor mounted on the coffin or manual operation from the reactor face.

Owing to the eccentric positions of the lead-filled hole and the open hole, considerable force is needed to hold the radiation door in certain positions. A special anti-kickback clutch is provided to make it impossible for the door to move unless driven or allowed to turn by rotation of the external drive shaft. The design is "fail safe" in case the drive becomes disengaged. When the beam hole components are removed, care must be taken that the radiation door is in a "free down" position so that the end-position locating pin will not be sheared when the removable shield is withdrawn. Associated with the radiation door is its position indicator. This is mounted on the face of the reactor over the cubicle to indicate the actual door position.

Removable Concrete Shield. To fill the void space in the large steel liner outside the radiation door, a steel-encased concrete cylinder is provided for necessary shielding. Eccentrically located in the concrete billet is a steel-encased cylindrical hole of approximately 10 in. I.D. which forms a portion of the experimental hole. Removal of this shield permits access to the radiation door.

Removable Steel Shield. Between the removable concrete shield and the removable steel shield is a void 5 in. wide which is used for cooling-water pipe connections. Behind this space is a round steel billet mounted flush with the reactor face, which provides a convenient shield for the plug cooling-water connections. This billet is of necessity readily removable. Based on calculations of cooling-water activity, this steel is required to be approximately 8 in. thick.[2]

In addition to providing a shield for the cooling-water lines, this steel billet forms the second step to prevent neutron streaming through the plug annulus and as a step to prevent neutron and γ-ray streaming down the annulus surrounding the radiation door and the concrete shield.

Beam Hole Adapter. This adapter consists of a steel tube with a flanged end that is bolted to the removable concrete shield before plug insertion or withdrawal. Its purpose is to guide and support the dummy plug, during insertion or removal, through a 13-in. gap which exists when the steel shield plate is removed.

3.1.3 Beam Hole Dummy Plugs. When the experimental holes are not being used they are filled by dummy plugs. The conceptual design shown in Fig. 3.1.B is typical of the plugs for HB-1 through HB-6 and HT-1. Dummy plugs for the other facilities are similar except for the absence of beryllium tips and provisions for water cooling. Figure 3.1.C illustrates the air-cooled plugs for the latter holes.

The water-cooled plugs are constructed in three detachable sections. The sections are: (1) the beryllium tips, (2) the graphite section, and (3) the concrete and steel section. With this type of construction it is possible that an experimental plug may conform to the dummy plug as far as the graphite and concrete sections are concerned. If more experimental space is required, it may conform only to the concrete section.

In choosing plug materials, an effort has been made to duplicate in so far as possible the materials in the reactor sections surrounding the experimental holes. The result of this procedure is that neutron fluxes in the reflector regions, beryllium and graphite, are maintained at practical maxima. Materials for the plug casing have been chosen for minimum neutron absorption and induced activity, consistent with structural requirements. Outside the thermal shield materials have been determined by shielding and structural considerations.

To compensate for such factors as plug deflection, plug fabrication tolerances, and reactor component erection tolerances, an annular clearance of ¼ in. is allowed in the beryllium and graphite sections of the plug and experimental hole. From the thermal shield to the reactor face, the maximum annular clearance is 1/8 in. A closer fit can be tolerated here because the plug is well guided in this section by the plug rollers, and, because of the heavy construction of this section of the plug, there is little deflection.

Plug Cooling. Owing to the high heat generation in the beryllium tips of the horizontal beam hole plugs (HB-1 to HB-6), water cooling is provided. The

arrangement is illustrated in Fig. 3.1.B. Cooling water is directed through the plug by means of two concentric pipes. The inner pipe serves as the supply line, and the outer pipe serves as the return. The supply line directs the water to a manifold, which in turn divides the flow through several longitudinal holes in the beryllium section. At the far end of the beryllium, the water fans out through radial slots and into the annulus formed between the beryllium and its aluminum can. The water is returned through this annulus to the return line manifold, then into the return line, and back into the process-water stream. The thermal stress in the beryllium was the controlling factor in the determination of cooling-water distribution and rate of flow.[3]

The graphite sections of the water-cooled plugs are cooled with the same pipes that direct the cooling water to the beryllium tips. The graphite is fitted snugly over the pipes to assure good thermal contact. This is the primary reason that the concentric pipe design was adopted, since it is difficult to assure a snug graphite fit over two separate pipes.

The aluminum shell encasing the graphite is cooled by air flowing along the annulus. Air is drawn in at the reactor face and passes along the shield and beam hole plug annuli, is metered by the fit at the tapered section at the thermal shield, flows along the annulus between the plug casing and graphite zone liner, and passes out into the pebble zone through holes in the liner near the tank wall. The amount of air is determined by the requirement that the temperature of the aluminum shell of the plug shall not exceed 500°F since beyond this temperature the 63S alloy used suffers rapid loss of strength. Higher strength alloys such as 24S, 52S, and 75S were not used owing to the high induced activity they would acquire. Cooling of the shell by conduction of heat through the graphite to the water cooling pipes is probably impractical because of differential expansion.

The water pipes are securely attached to the beryllium section and are allowed to "float" in the steel and concrete sections. Also, because of thermal expansion the graphite must slide a little over the outer tube, and it is therefore not clamped tightly to this tube. Calculations indicate that dangerous amounts of radiation will not "stream" down the cooling pipes even when they are empty of water. If, however, experience indicates that some shielding is necessary, a twisted stainless steel strip may be used in the center tube and a flat strip formed in a helix may be used in the annulus.

The plugs penetrating only to the reactor tank wall are cooled by air drawn along the annulus from the reactor face and into the main reactor air stream through holes in the graphite zone liner. The amount of cooling air that flows through the annulus is regulated by means of spacers located on the plug taper. The thickness of these spacers determines the clearance between the plug and the liner at the taper and consequently sets the pressure drop as well as the resulting air flow through the annulus. Here again the design is based on a maximum aluminum and graphite temperature of 500 F. Again, the casing expands more than the graphite; therefore the casing is perforated with holes which permit the cooling air to contact the graphite and thereby provide direct air cooling.

Dust Control. As a standard health precaution, an air velocity of 150 ft/min into the reactor through the plug annulus will be maintained during plug removal. A similar velocity will be maintained during normal operation to minimize passage of dust into the reactor room. In all cases the air cooling requirements of the plugs exceed Health Physics requirements during operation. To provide sufficient velocity during plug removal the holes through the pebble zone liner into the pebble zone have been made large enough to provide the necessary air flow with only the shutdown fan operating.[4]

3.1.4 Horizontal Through Hole Facility The horizontal through hole is a 4 11/16 in. square hole that extends from one reactor face to the opposite face. It goes through the reactor tank adjacent to one side of the active lattice. The general philosophy in providing the through hole has been to make available for experimentation a facility with high flux, ample space, and a single pass cooling system. Experimenters have expressed a strong desire for such a facility, i.e., one with which they can irradiate future reactor fuel elements under simulated operating conditions.

The hole liners and components are generally the same for this facility as for the beam holes previously discussed, the only difference being that there is a complete liner for each end of the hole, each with a radiation door and other related liner components. The plug, however, presented more difficult problems than the plugs discussed in the foregoing section. For this reason a separate discussion on the plug for the through hole is warranted.

As a basis for design, the following premises were established:

1. The cooling system for the beryllium shall be a single-pass system, i.e., the water enters at one side of the reactor and leaves at the other side.

2. There shall be no blind water connections which will have to be made up after insertion within the reactor structure, and the complete cooling circuit for the plug shall be arranged to allow testing for leaks prior to insertion in the experimental hole. This dictates that one section of the plug shall contain a complete cooling-water line, which will extend from one side of the reactor to the other.

3. A coolant return loop and a means for hookup to the experimental plug and associated equipment shall be provided. This would then complete the desired single-pass cooling system.

4. A space in the Reactor Building shall be made accessible for setting up experimental equipment. This is desirable because the external equipment needed for the testing of the reactor fuel elements is quite extensive, and in some cases may have to be heavily shielded.

The design of the facility is shown in Fig. 3.1.D. It will be noted that the plug consists of three separate sections. The square section contains the beryllium, the graphite, and the complete cooling-water pipe, while the other two sections are merely round dummy plugs that fit over the extended water pipes of the square plug. These dummy plugs are identical in shape and construction to the concrete sections of the 8-in. horizontal beam hole plugs. The water pipes can be disconnected at the thermal shield by means of specially designed screwed connections so that they may be removed with the round dummy plugs.

To cool the beryllium section, one end of the extended water pipe is connected to the supply-water line; the other end is connected to the drain line. In an attempt to forecast future demands of this facility, a coolant return loop is provided. The 8-in. horizontal graphite hole, HG-2, has been chosen to serve as the coolant return loop. It is ideal because it runs parallel to the through hole, HT-1, and also passes completely through the reactor.

In Fig. 3.1.D is also shown a coolant pipe located in the center of a graphite plug inside the HG-2 hole. This plug is rather long, but upon removal it can be cut into two or three sections, thereby permitting the use of standard coffins for handling.

The two coolant lines are joined at one end of the reactor by means of a simple crossover pipe; at the other end of the reactor, a vertical conduit leading down to a slurry cubicle in the basement is indicated. The intention here is to connect coolant lines to the end of each plug, direct them through the conduit, and complete the circuit in the reactor basement. All piping, except that emerging into the basement, is thus completely shielded, and no bulky temporary shielding walls will be needed in the main floor cubicles. The primary reason for providing additional experimental setup space in the basement is that the equipment required for a recirculatory system is probably extensive, i.e., the setup may include pumps, heat exchangers, heaters, pressurizing equipment, control panels, associated piping and valving, etc.

A consensus indicates that some experiments may require a coolant loop that is in a low flux zone. For this type of experiment the use of this HG-2 hole as a coolant loop would not be desirable since the flux in the center of this facility is approximately 10^{10} neutrons/cm^2-sec. Also, passages to the basement large enough to accommodate heavily insulated pipes subject to linear expansions of about 6 in. are required for high-temperature tests.

To satisfy both these conditions, space for an alternate cooling loop is provided in an inactive reactor zone together with large slots through the main floor. A 12-in. hole running from side to side of the reactor structure below the first floor and parallel to the HT-1 hole provides space for the alternate loop. Access to this hole is accomplished by means of 12- by 24-in. holes through the floor in front of the HT-1 cubicles. In the basement the desired piping may be directed along the ceiling directly under the first floor and thence to the 12-in. hole. This setup gives the desired low flux condition and allows an experimenter to install his own piping, insulation, etc., to suit his requirements of temperature and thermal expansion.

In regard to insertion and withdrawal, the round portion of the experimental hole has an adapter or tray which enables the square plug to pass

smoothly through the larger round section of the hole. After the square plug is in position, the adapter is removed to clear the hole for the insertion of the round dummy plugs. Small graphite skids are fastened to the square plug to assure proper clearances and also permit smooth insertion. The round dummy plugs are fitted with rollers identical to those used for the 8-in. horizontal beam hole plugs. 24S aluminum is selected for the sheath over the beryllium and graphite. Owing to the over-shadowing high activity induced in the beryllium, there is little to be gained from the use of 63S aluminum in this location.

Cooling provisions for the beryllium, graphite, and aluminum are similar to those used in the HB holes.

3.1.5 Other Horizontal Experimental and Instrument Holes. In addition to the main experimental holes described in the previous sections, there are six more horizontal through holes. Four of these, HG-1 through HG-4, are for experimental use; the other two, HI-2 and HI-3, are for reactor control instruments.

Experimental Holes. The locations of holes HG-1 through HG-4 can be seen in Figs. 3.A and C. HG-1 and HG-2 go through the full length of the east graphite wall while HG-3 and HG-4 penetrate the west wall. The first two holes are 8 in. in diameter, the latter two 4 in. in diameter through the graphite.

For start-up, plugs will be supplied only for the ends of these holes and the section through the graphite will be left empty. The plugs supplied will be barytes concrete through the biological shield tipped with a 10¼-in. aluminum casting through the thermal shield. The inner face of the aluminum section will be covered with a ¼ in. boral plate to reduce the neutron flux into the plug. A 1-in. I.D. steel pipe is spiraled through each plug so that electrical or plumbing connections can be made to experimental equipment in the holes.

As indicated in Section 3.1.4, hole HG-2 may possibly be used as a return path for liquids or slurries used in HT-1 hole experiments.

Instrument Holes. Access to HI-2 and HI-3 is obtained through the east and west faces of the reactor structure. These holes are to be used for the

compensated ion chambers (see Chap. 5) for the log N and galvanometer circuits of the reactor control system. Both holes have a minimum diameter of 10¾ in. and are plugged only through the biological and thermal shields. The plugs used are barytes concrete tipped with a 30-in.-long aluminum casting. A 4-in.-diameter hole runs through the center of the plug to within 4 in. of the inner end. This allows the tip of the ion chamber to be inserted to the inner side of the thermal shield. An adjustment on the ion chamber insertion rod enables the chamber to be moved back as much as 18 in. from the inner position.

3.1.6 Services. All the experimental beam holes are provided with standard service facilities. These services are divided into two categories, internal services and external services.

The internal services, so called because they are located within the biological shield, are primarily concerned with providing the cooling fluid for the experimental and dummy plugs, and are all connected to a common header to permit plug flushing and also ready change-over to another plug coolant. They include the following: (1) process-water supply, (2) process-water return, (3) demineralized-water supply, (4) spare liquid line, (5) warm drain to sump, and (6) compressed air.

The external services are located in trenches around the reactor face and are primarily concerned with servicing experimental equipment exterior to the experimental plugs. They include the following: (1) demineralized-water supply, (2) auxiliary blended cooling water, (3) compressed air, (4) hot gas exhaust, (5) steam, (6) 120-volt a-c supply, (7) 120-volt a-c supply for regulation, (8) 240-volt a-c supply, (9) two 2-in. spare conduits, (10) one 4-in. spare conduit, and (11) intercom or telephone.

3.1.7 Coffins. Whenever the occasion arises to insert or retract a plug, a heavy lead-shielded coffin is accurately aligned at the chosen experimental facility. After proper alignment, the plug is withdrawn from or inserted into the beam hole. The coffin requirements for the MTR experimental holes can be satisfied by three coffins, each coffin to take care of one of the following three groups of holes:

1. Main Beam Holes HB-1, 2, 3, 4, 5, and 6, HG-5 and 6, HR-3 and 4, and the Through Hole HT-1. A coffin for these facilities, designated as a "Universal Coffin," is provided for reactor operation;

it is shown in Fig. 3.1.E. It is rather heavy owing to the 10 in. of lead necessary for shielding the beryllium parts of most of the plugs of this group. The gross weight as shown, with the HT-1 hole adapter attached, is 41,000 lb. An electric tractor with a special lift type trailer towing attachment is provided to move the coffin. To facilitate its operation the concrete roadway from the reactor face to the plug storage facility is made level and is adequately reinforced at its expansion joints to safely support this heavy load. A pull rod is furnished for manually moving the plugs out of or into their holes in the reactor or plug-storage facility. Lead plugs are furnished for shielding the open ends during the HT-1 loading or unloading operation. A roll-over device for converting from HT hole to HB hole operation is also provided.

2. All VN Holes, DB Holes, and All VG Holes Other than VG-9. A proposal for a coffin for this group has been made,[12] but the final design has been postponed pending the experience to be gained in the operation of the Universal Coffin of Group 1. The proposed coffin differs from the Universal mainly in being smaller and lighter and having a motorized winch for retracting or inserting plugs. Also, a special crane sling is utilized to align the coffin at the vertical and inclined beam holes. About 6 in. of lead shielding is adequate to handle all the dummy plugs for these holes, but provision should be made for adding layers of lead for "hot" experimental plugs.

3. HG-9, VG-9, and HI-2 and 3. The coffin for this group will be rather large in any case. For removal of dummy plugs it should have lead shielding about 6 in. thick, but for a major HG-9 experiment much more shielding will be necessary. The design of a coffin for this group has been postponed pending the operational experience to be gained with the Universal Coffin of Group 1.

Universal Coffin Design and Operation. The Universal Coffin as used for the HB holes is made up of three sections having a total length of approximately 18 ft. The first section is approximately 33 in. in diameter and is about 4 ft 5 in. long. It has the coffin mounting flange and a radiation door at one end. The middle section, shaped like a frustum of a cone tapering from approximately 33 to 20 in. in diameter, is about 6 ft long. The third section is simply a steel tube with flanges at each end, and on it are mounted all the driving mechanisms for operating the radiation door in the beam hole liner. A trunnion together with jacks and traverse bases permits exact alignment of the coffin after approximate placement of the dolly.

DWG. # 10766 [redacted]

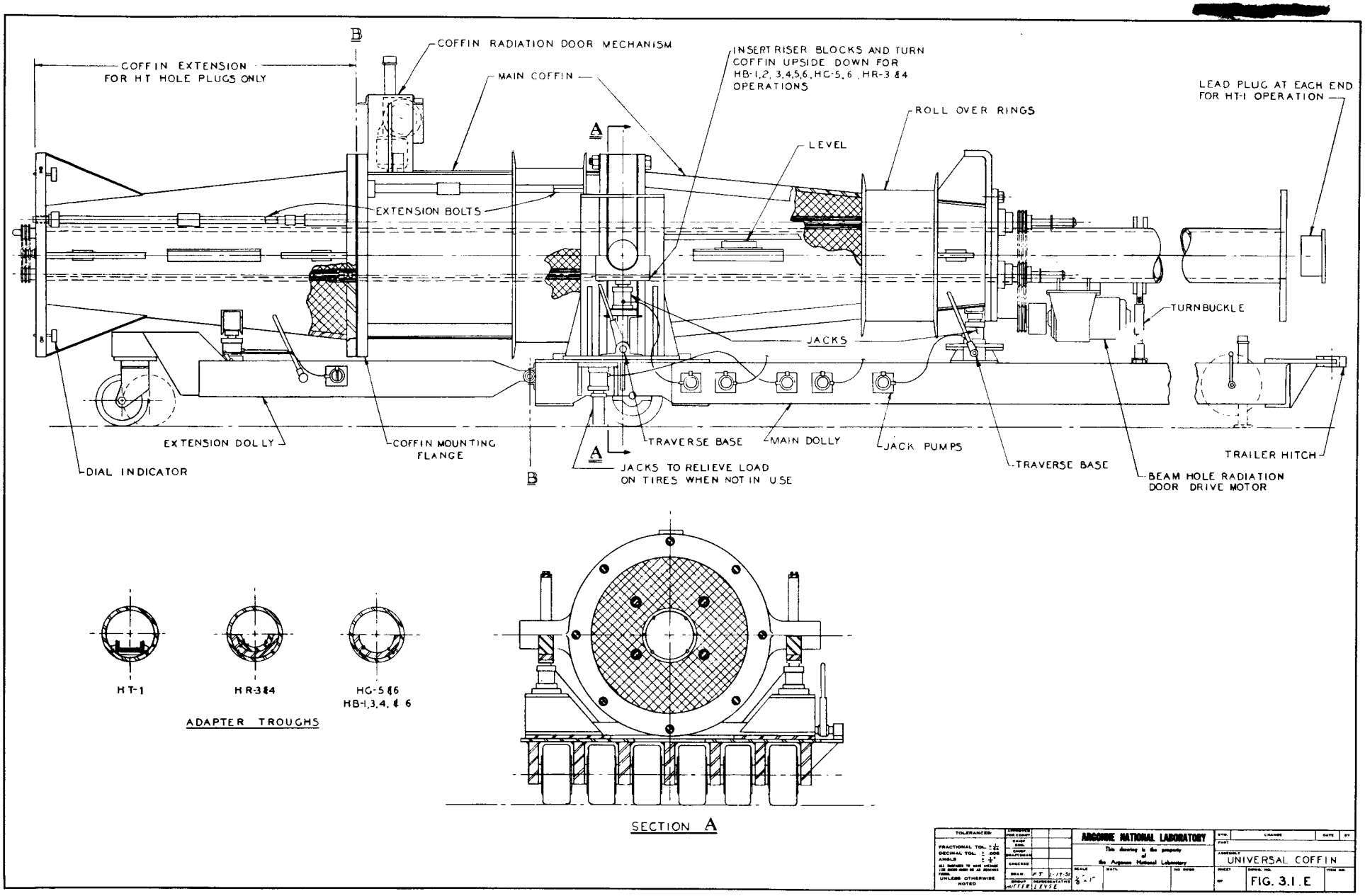

The radiation door in the coffin is lead and is approximately 10 in. thick. The mechanism for opening and closing this door consists of an electric motor-driven worm gear which drives an acme screw shaft to open or close the door. The door is accurately located when open as it forms a part of the pathway on which the HB-2, HB-5, and HT-1 plugs roll.

The dolly is used for aligning the coffin at the horizontal beam holes and plug-storage facility, and also for horizontal transportation. It is a rigid frame of welded construction supported by six heavy-duty rubber-covered wheels mounted on a common axis. To simplify maneuvering of the coffin during transportation and alignment, the dolly is operated like a two-wheeled trailer and is moved by an electric tractor. The tractor is fitted with a special trailer hook which can be hydraulically (or electrically) operated to raise or lower the front end of the dolly.

For properly aligning the coffin with the horizontal experimental beam holes in the reactor or the holes in plug storage, manually operated traverse mechanisms for lateral movement of the coffin are provided at both ends of the dolly. Vertical alignments are provided for by three manually operated hydraulic jacks. Differential movement of the two jacks at the heavy end will provide rotational adjustment to fit the bullet type dowels on the reactor face and plug-storage face. A machinist's level at the side of the coffin gives the approximate level position for the first stage of attachment. When the coffin is slid onto the dowels and is within ¼ in. of the cubicle face, four dial indicators on the coffin flange begin to indicate actual squareness with the cubicle face. The cubicle face will be erected square with the centerline of the beam hole within very close tolerances; hence it is the proper guide for coffin alignment. After the jacks and traverse bases have been readjusted to bring the dial indicators to a common reading, the bolts are inserted and tightened in order to clamp the coffin securely to the cubicle face.

Removal or insertion of the plug is performed manually by means of a long rod. When the plug is in the coffin, radiation doors in both the beam hole and coffin must be closed before the coffin is pulled away.

To insert the plug in the plug-storage facility a similar procedure is followed except that because of large clearances attaching bolts are not needed.

HT-1 Hole Operation. Special procedure is necessary for operation with the HT-1 hole. The coffin is removed from the dolly by the crane and rolled over 180° on a special fixture. It is then lowered on the dolly with the trunnion riser blocks removed. When the coffin and dolly extensions are bolted on, the coffin is ready for use.

After the water-cooling pipes of the HT-1 plug are disconnected at the thermal shield, the round plug that extends from the cubicle face to the thermal shield is removed at each end and the radiation doors are closed. These plugs are then placed in plug storage. A special tray for handling the square HT-1 plug is placed in the coffin before returning it to the reactor. After the coffin is bolted in place, the beam hole radiation door is opened and the tray is slid into the beam hole up to the thermal shield. The plug is pulled out onto the tray, which can be kept from sliding out by a push rod, and the tray and plug are then pulled into the coffin. An annular shielding plug is used at the outer end of the coffin to reduce radiation from the end of the plug. After the radiation door in the beam hole is closed, the coffin is unbolted and pulled ahead about 1 ft so that a radiation plug may be inserted in the end. The coffin is then transported to plug storage and the plug is slid off its tray into one of the square plug-storage holes.

3.2 VERTICAL EXPERIMENTAL AND INSTRUMENT HOLES

The MTR has 71 experimental and instrument holes accessible from the top of the reactor. The general layout of the top surface of the reactor with essential dimensions indicated is shown in Fig. 3.E. Details of the hole locations and the numbers assigned to them are given in Fig. 3.F. It is only fair to warn the reader that holes VG-21 and VG-22 are nonexistent — they were lost in the shuffle.

It will be noted in Fig. 3.F that some of the holes go into the pebble zone and others into the permanent graphite, while two extend through the reactor structure and are accessible from the basement of the Reactor Building. The way in which the holes into the pebble zone slant in toward the reactor tank is shown in Fig. 2.B. All the facilities entering the pebble zone have complete liners, steel through the concrete, then fluted aluminum tubes in the graphite. Cooling inside the liner is provided by air which leaks around the

plugs and into the pebble zone through holes in the bottom of the liner tube.

All the vertical holes into the permanent graphite have liners in the concrete but not in the graphite. In order to maintain proper air flow in the permanent graphite, these experimental holes must always be plugged during operation by concrete plugs through the biological shield and by full-length graphite plugs in the graphite region.

In general the graphite plugs will be tailor-made to suit particular experiments, but it is expected that the barytes plugs used for start-up will be adequate for most experimental setups. These barytes plugs are all provided with stainless steel tubes spiraled through them so that electrical leads, etc. can be brought out from the experimental equipment. These tubes are 1 in. in diameter for the pebble zone holes, VG-9, T2-V1, and T2-V2, and ½ in. in diameter for the permanent graphite holes. In all cases the graphite plugs are suspended from the barytes plugs by a rod and clevis arrangement.

3.2.1 Instrument Holes. The holes presently reserved for instruments required in the operation of the reactor are VN-1 through VN-6, VG-8, 15, 27, 28, 42, 44, and 56, and GM-1 and 2.

Holes VN-1 through VN-6 are sloping holes with their lower ends 2 ft 8 in. from the vertical centerline of the reactor at elevation 100 ft 5 in. (i.e., just above the horizontal centerline of the reactor). The hole liners are 3-in.-I.D. aluminum tubing in the pebble zone. The ion chambers for the safety and log *N* circuits are suspended in these holes by rods from the barytes plugs which fill the top 6 ft of the holes. In each hole the ion chamber position is set roughly by the length of the supporting rod, but this position may be adjusted ±6 in. by a threaded shaft which extends through the top plug.

VG-8 and VG-15 are pebble zone holes reaching to elevation 98 ft 4 in. which are to be used for fission chambers. Since the fission chambers will be most useful near the centerline of the reactor during start-up, but above the thermal shield during high-power operation, winches are provided above VG-8 and VG-15 to raise and lower the chambers. Total motion of approximately 12 ft is provided by this means.

The instrument holes, VG-27, 28, 42, 44, and 56 are vertical holes extending to elevation 96 ft 0 in. in the permanent graphite. They will contain

neutron thermometers suspended in graphite plugs.

The remaining instrument holes, GM-1 and GM-2, are thimbles projecting into the exit water lines. They provide space for the γ-ray ion chambers which monitor the N^{16} activity in the exit water.

3.2.2 Experimental Holes. Holes VG-1, 3, 5, and 6 are pebble zone holes with 4-in.-I.D. fluted aluminum liners extending to elevation 96 ft 2-5/8 in. At the bottom the centerline of these holes is approximately 2 ft 8 in. from the vertical centerline of the reactor. For start-up they are equipped with barytes plugs from which are suspended 3¾-in. diameter GBF graphite plugs.

Holes VG-7, 9, 10, and 16 through 20 are also pebble zone holes but with 2½-in.-I.D. liners extending to elevation 98 ft 4 in. At this elevation the centerline of the liners is 2 ft 10 in. from the vertical centerline of the reactor. The graphite plugs provided for start-up are 2¾ in. in diameter.

VG-23 through 62, except VG-27, 28, 42, 44, and 56, are vertical permanent graphite holes at various distances from the reactor (see Figs. 3.E and F) extending to elevation 96 ft. There is no liner in the graphite zone, but for start-up 1¾-in. graphite plugs are suspended in the 2-in. holes in the graphite.

VG-2 and 4 are through holes accessible from the top of the pile and from the sub-pile room. Barytes plugs are provided through both top and bottom biological shields, and a rod and clevis arrangement allows the graphite plug to be fastened to the top plug. The bottom plug is inserted from the sub-pile room and bolted to the sub-pile room ceiling. Through the graphite the holes are each 4 in. in diameter, requiring a 3¾-in. GBF plug.

VG-9 is a large (10 by 10 in.) square hole penetrating the permanent graphite to elevation 100 ft 6 in. directly above HG-9. The centerline of the hole is 4 ft 5 in. from the vertical centerline of the reactor. The graphite section of the plug is GBF 9¾ by 9¾ in.

T-2—V-1 and T-2—V-2 are thermal column holes, 12¾ by 12¾ in., through the top of the thermal column liner. Each of the GBF graphite plugs is suspended by a ½-in. steel rod from the barytes plug. This rod goes through the graphite plug and is welded to ¼-in. steel plate at the bottom of the plug, which is at the same level as the steel liner of the thermal column.

The other two experimental holes provided in the reactor are intended for γ-ray experiments. These holes, GT-1 and GT-2, are stainless steel thimbles, 6 in. in I.D., projecting into the exit water lines where the N^{16} activity will be high.

In addition to the above experimental holes, twelve 2-in.-I.D. holes are provided in the concrete. These holes, designated VC-1 through 9 and VC-11 through 13, penetrate the south wall of the biological shield to elevation 92 ft. Their location is indicated in Fig. 3.E around the south instrument cubicle (to the right of GM-1) and between the cubicle and the outer edge of the reactor top. It is expected that these holes will be useful for thermocouples or for shielding measurements.

3.3 THERMAL COLUMN

3.3.1 General Description. The purpose of the thermal column is to provide a readily accessible field of thermalized neutrons for experimentation.[13] In order to create such a field of thermal neutrons the permanent graphite (see Section 2.4.2) is extended to the outer edge of the biological shield through a 6-ft-square hole in the thermal shield and the concrete. Graphite is used because it is a good moderator with low absorptivity and hence can create an almost pure field of thermal neutrons at high intensity over a large volume.

Figure 3.3.A is a cut-away view of the thermal column with the graphite removed. The graphite stacking is shown in Fig. 3.3.B. In Fig. 3.3.A, the steel liner adjacent to the concrete serves to absorb radiation from the thermal column in a manner analogous to the thermal shield around the reactor proper. The cadmium sheet next to the steel absorbs impinging slow neutrons so that the steel liner will exhibit a minimum of induced radioactivity after pile shutdown.

Since not all the neutrons are thermal, some (a flux of about 10^3 to 10^4 neutrons/cm^2-sec) will reach the steel. This is sufficient, after extended operation, to induce biologically dangerous activity in the steel so that persons entering the empty column during reactor shutdown must be protected. For this reason the 2-in. lead liner is provided over the neutron-absorbing sheet.

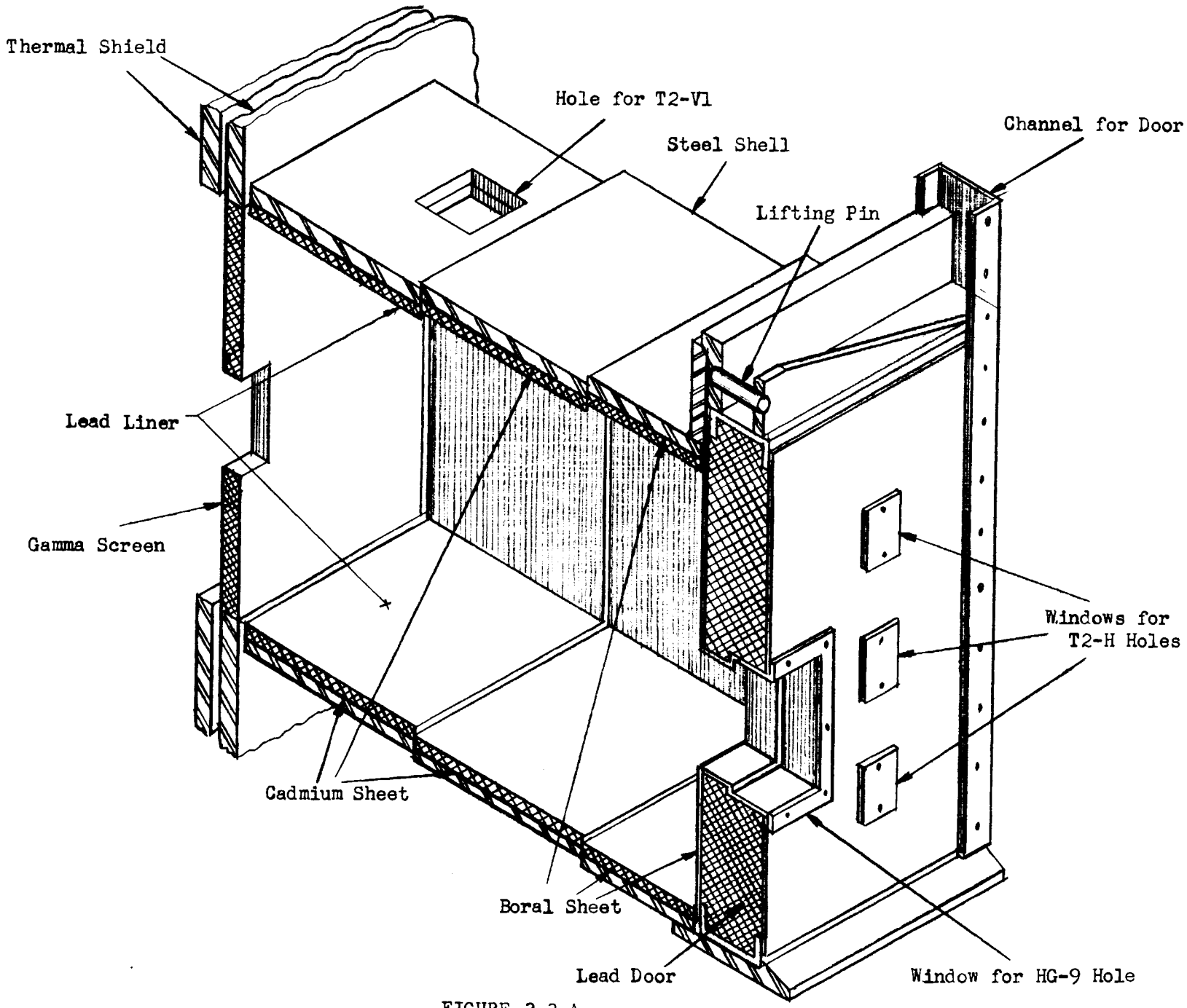

FIGURE 3.3.A
THERMAL COLUMN- CUTAWAY VIEW WITHOUT GRAPHITE FILLER OR SURROUNDING CONCRETE

[redacted]

Dwg. #8352

Dwg. #8353

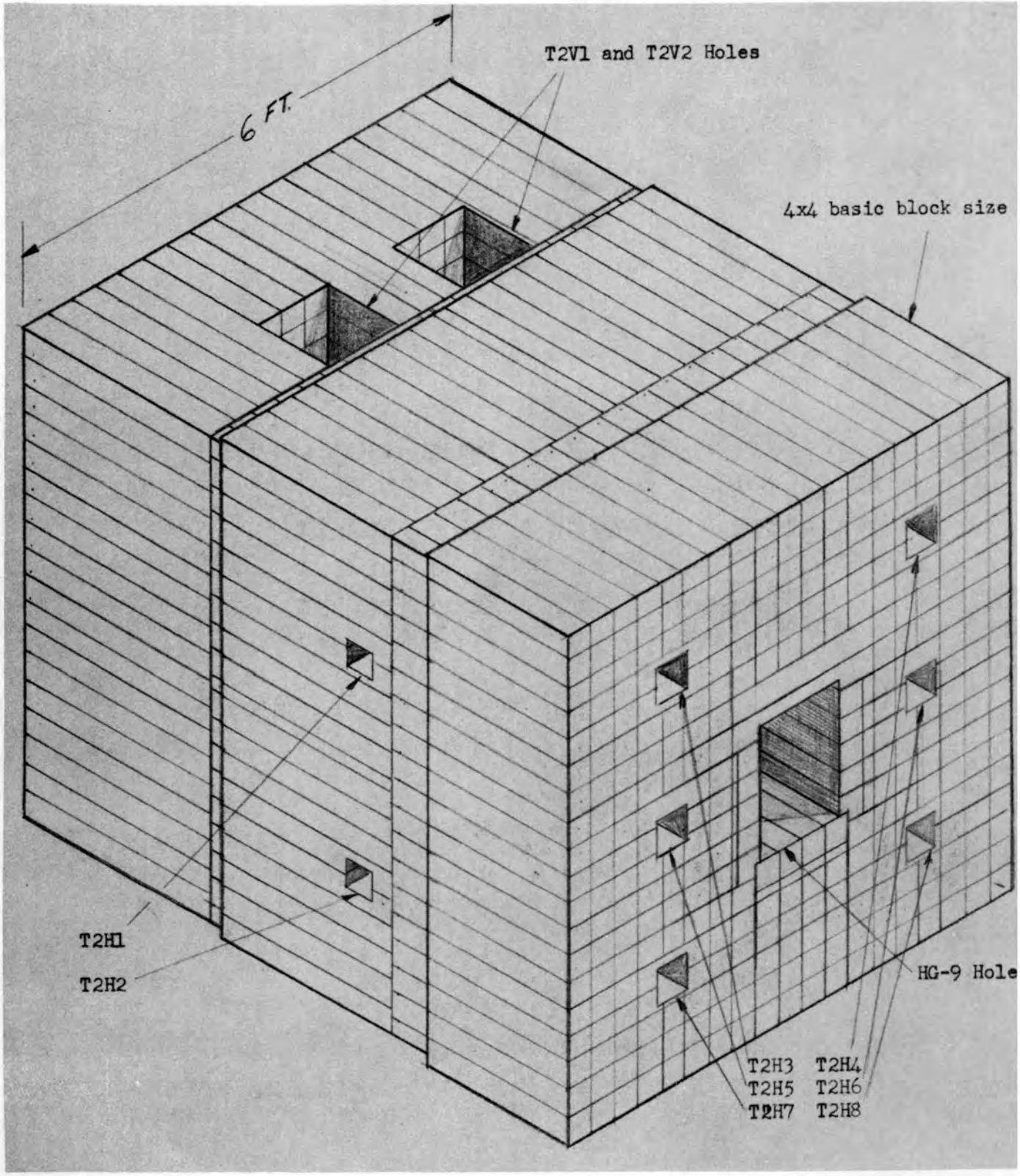

FIGURE 3.3.B
GRAPHITE ASSEMBLY FOR THERMAL COLUMN

[redacted]

Because of its relative cheapness and availability, cadmium sheet is used wherever possible for the neutron-absorbing liner. However, since cadmium emits a highly energetic γ ray upon absorbing a neutron, its use is restricted to those places where adequate shielding from these hard γ's is present. In the outermost section of the liner (see Fig. 3.3.A) and on the inner face of the lead door, boral[14] (boron carbide—aluminum sheet), which gives off a much weaker γ, is used.

To prevent streaming of fast neutrons from the reactor, the liner as well as the graphite filler makes at least two sidesteps between the outer face of the graphite reflector and the lead door. Scattering steps are also provided for biological shielding in the apertures and around the edges of the lead door. As indicated in Section 2.4.2, GBF graphite is used since it is the purest commercially obtainable.

The lead door indicated in Fig. 3.3.A is designed to reduce the radiation from the thermal column to the same level as that through the concrete biological shield. It can be raised with the overhead crane and held in an elevated position by lever-actuated pawls.

3.3.2 Thermal Column Experimental Facilities. The thermal-column experimental facilities include one large horizontal hole and 10 small holes, as follows:

Horizontal Holes:

HG-9	9 × 15 in.	To D tank
T-2—H-3 through T-2—H-8	4 × 4 in.	To γ-ray screen
T-2—H-1 and T-2—H-2	4 × 4 in.	90° column accessible on north or south face of reactor

Vertical Holes:

T-2—V-1 and T-2—V-2	12 × 12 in.	Accessible at top of reactor

In some respects the HG-9 hole should not be considered as part of the thermal column since it provides access to the fast-neutron flux directly from the active lattice through sealed empty cans in the beryllium. However, with

appropriate plug arrangements the fast flux can be utilized by one experiment and still not disturb the thermal column.

The holes normal to the direction of the thermal column are expected to be extremely useful in providing very pure fields of thermal neutrons although at somewhat reduced intensity.

3.4 SHIELDING FACILITY

The proposed shielding facility for the MTR has become a victim of delay and economy. During the early design stages of the MTR it was recognized that the problems associated with the shielding of nuclear reactors were among the most serious in the industry. It was felt therefore that to be a completely versatile test reactor the MTR should include a facility for shielding experimentation, and the 6- by 6-ft hole on the west side, which was formerly a second thermal column, was redesigned for this purpose. However, the shielding problem became so urgent that a Bulk Shielding Facility was designed and built at ORNL. When the MTR costs were reviewed in the spring of 1950, it was decided that since the Bulk Shielding Facility would be in operation long before the MTR, considerable money could be saved by eliminating the shielding facility for the reactor.

As a result of the above decision, the MTR biological shield now contains a 6- by 6-ft hole which will be filled, for the present, with closely packed barytes blocks. However, in the hope that eventually this facility may be used for a thermal column or other experiments, the following steps have been taken to permit removal of the concrete blocks without danger of overexposure to radiation:

1. The 6- by 6-ft hole will have a well-anchored steel liner. During construction this liner will be provided with tapped holes so that at some future time lead plates can be fastened to it as each layer of concrete blocks is removed.

2. The inner end of the hole is covered by a quickly removable boral sheet.

3. Means are provided for raising a 2-in. lead door up between the thermal shield plates to cover the hole.

In this way it is hoped that the concrete blocks can be removed and graphite or other material stacked in during reactor shutdown. In addition, a deep water shield tank is set into the floor immediately in front of the shielding facility hole.

The preliminary design of the shielding facility as planned in November, 1949 is fully described in ORNL CF-49-12-30.[15]

3.5 PNEUMATIC RABBITS

The pneumatic rabbits provide the Materials Testing Reactor with facilities to irradiate small samples of material in the high-neutron fields of the reactor. The horizontal holes that constitute the pneumatic rabbit facilities are HR-1, 2, 3, and 4. However, any beam hole can be adapted to provide additional shuttle facilities. Holes HR-3 and 4 are of 4 in. I.D. and extend inward only to the reactor tank. Holes HR-1 and 2, which are 1-in. in diameter, extend completely through the reactor and pass within 1 in. of the active lattice (see Fig. 2.D).

The only parts of these facilities which actually exist in the construction are the holes and liners and the vacuum exhaust lines within the reactor. It is intended that the HR-1 hole always be used for "through shuttles," i.e., shuttles that pass directly through the reactor. The equipment for this hole and the HR-3 and 4 holes will bedesigned and set up by the experimenters, and it is therefore not discussed further.

The HR-2 hole is intended primarily for "re-entry shuttles," i.e., shuttles that are stopped at the active lattice for a given interval and then propelled out the same side through which they entered. The additional equipment for this system is not included in the present construction, but a design proposed[16] by ANL is discussed in Appendix 9. The proposed re-entry shuttle equipment provides for the introduction of the shuttles into the system in the basement and provides a means of propelling them to the inner end of the rabbit tube. After a predetermined irradiation period in the reactor, they can be expelled either to the laboratories in the Reactor Building wing or to an unloading station in the basement. The major components of the system, all fully described in Appendix 9, are a loading terminal, shock absorber, transfer unit, laboratory selector, and unloading terminals.

3.6 HYDRAULIC RABBITS

The hydraulic rabbit system for the MTR consists of two 1-in.-I.D. vertical tubes running through the bottom plug into the east end of the beryllium reflector (see Figs. 2.D and 2.4.A and B) and a 1.31-in.-I.D. tube through each of the regulating rod holes not in use.

Only the tubes inside the reactor and through the bottom plug are being provided in present construction. However, a tentative design for the entire system proposed by ORNL is outlined in Appendix 10.

3.7 REFERENCE REPORTS

(1) Persiani, P. J., *Calculation of Induced Gamma Activity in Commerical Materials*, ANL-EKF-7, October 11, 1949.

(2) Krisberg, N. L., *Calculations on Plug Design*, ANL-EKF-21, September 23, 1949.

(3) Lennox, D. H., *Beryllium Cooling in Experimental Hole Plugs*, ANL-EKF-1, May 2, 1949.

(4) Leyse, C. F., *MTR Shutdown Air Requirements*, ANL-EKF-30, January 10, 1950.

(5) Krisberg, N. L., *Open Beam Hole Area Permitted, etc.*, ANL-EKF-22, December 7, 1949.

(6) Lennox, D. H., *Cooling of Down Beam Hole Plugs*, ANL-EKF-6, September 20, 1949.

(7) Sullivan, T. E. and Schultz, A. B., *Experimental Holes, Plugs, and Related Facilities*, ANL-ABS-6, June 16, 1949.

(8) Sullivan, T. E., *Experimental Facility Proposals*, ANL-ABS-7, July 27, 1949.

(9) Sullivan, T. E., *Requirements and Basis of Design - Experimental Hole Plugs*, ANL-ABS-9, October 5, 1949.

(10) Sullivan, T. E., *Proposal - Horizontal Through Hole Plug*, ANL-ABS-12, November 25, 1949.

(11) Sullivan, T. E., *Addendum to Requirements and Basis of Design Experimental Hole Plugs Report*, ANL-ABS-17, March 27, 1950.

(12) Paleczny, M. P., *Coffins and Coffin Handling - MTR Design Report 21* (ANL).

(13) Thomas, T. H., *Materials Testing Reactor Report on Thermal Column*, ORNL CF-50-2-28, February 6, 1950.

(14) McKinney, V. L. and Rockwell, T., *Boral, a New Thermal Shield*, ORNL-242, September 6, 1949.

(15) Sholl, W. E., *MTR Design Report on Experimental Shielding Facility*, ORNL CF-49-12-30, December 8, 1949.

(16) Nicoll, D. and Lennox, D. H., *Design Report No. 44 - Pneumatic Shuttle*, ANL-ABS-16, March 27, 1950.

(17) Scott, D., *Pneumatic Rabbits in the X-Pile*, ORNL CF-47-11-35, October 31, 1947.

(18) Scott, D., *Status of the Pneumatic Rabbit Design in the High Flux Pile*, ORNL CF-48-6-134, June 9, 1948.

3.8 REFERENCE DRAWINGS

DWG. NO.	TITLE
BKC-3150-92-9A	Service Facilities for Experimental Plugs
BKC-3150-522-1	HB-1, 3, 4, and 6 - Liner
BKC-3150-522-2	HB-1, 3, 4, and 6 - Plug
BKC-3150-522-3	HB-1, 3, 4, and 6 - Radiation Door
BKC-3150-522-4	HB-1, 3, 4, and 6 - Shielding Plug
BKC-3150-522-5	HB-1 to 6, DB-1, HT-1, HR-3 and 4, HG-5 and 6 - Outer Shield Plug
BKC-3150-524-1	Typical Assembly of Liner, Plug, Radiation Door, and Shielding Plug
BKC-3150-544-1	HG-1 to 4 - Liner Assembly
BKC-3150-544-2	HG-1 to 4 - Plugs
BKC-3150-519-1	HI-2 and 3 - Mechanical Design
BKC-3150-519-2	HI-2 and 3 - Plugs
BKC-3150-564-2	Plug Coffin
BKC-3150-564-10	Coffin Radiation Door Drive
BKC-3150-554-2	VN-1 to 6 - Details
BKC-3150-551-1	VG-1, 3, 5, 6, 7, 10, 11, 12, 13, 14, 16 through 20 - Liner and Plug
BKC-3150-557-1	VG-23 through 62 except 27, 28, 42, 44, and 56 - Liner and Plug
BKC-3150-557-4	VG-27, 28, 42, 44, and 56 - Neutron Thermometer Equipment
BKC-3150-550-1	GT-1 and 2 - Gamma Thimble Plug
BKC-3150-562-1	VC-1 through 13 except VC-10 - Liner and Plug
BKC-3150-515-1 through 9	T-2 Thermal Column
BKC-3150-516-1	T-2—V-1 Thermal Column Liner
BKC-3150-516-2	T-2—V-1 Thermal Column Plug
BKC-3150-558-1	T-2—H-1 to T-2—H-8 Graphite Plugs - Reactor Structure
BKC-3150-514-1	Shielding Facility Arrangement
BKC-3150-538-1 through 10	HR-1 and 2 - Rabbit Tubes
BKC-3150-540-1 through 5	HR-3 and 4 - Rabbit Tubes

DWG #10204 [redacted]

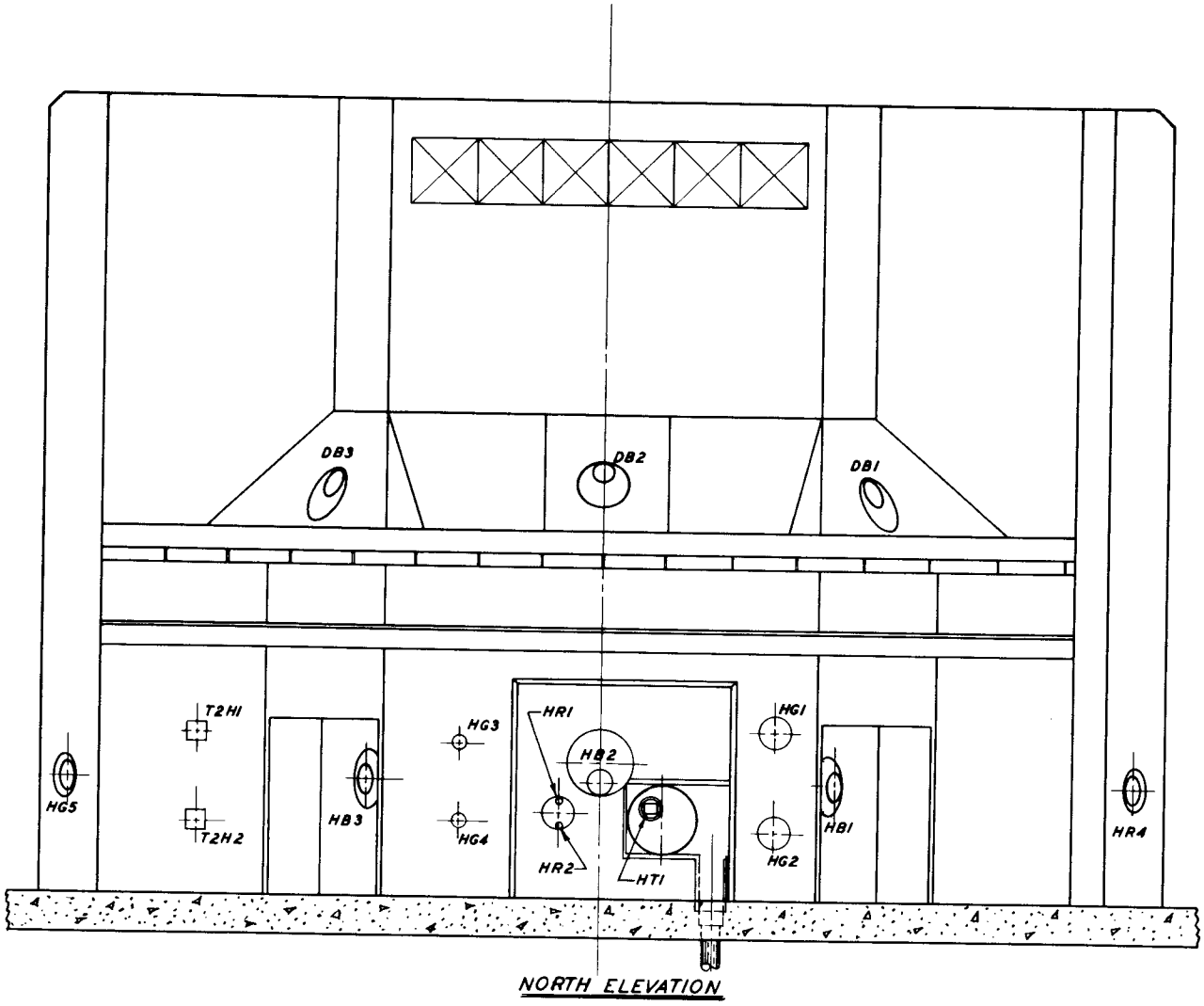

FIG. 3-A
MTR
VIEW OF NORTH FACE OF REACTOR

DWG. #10202 [redacted]

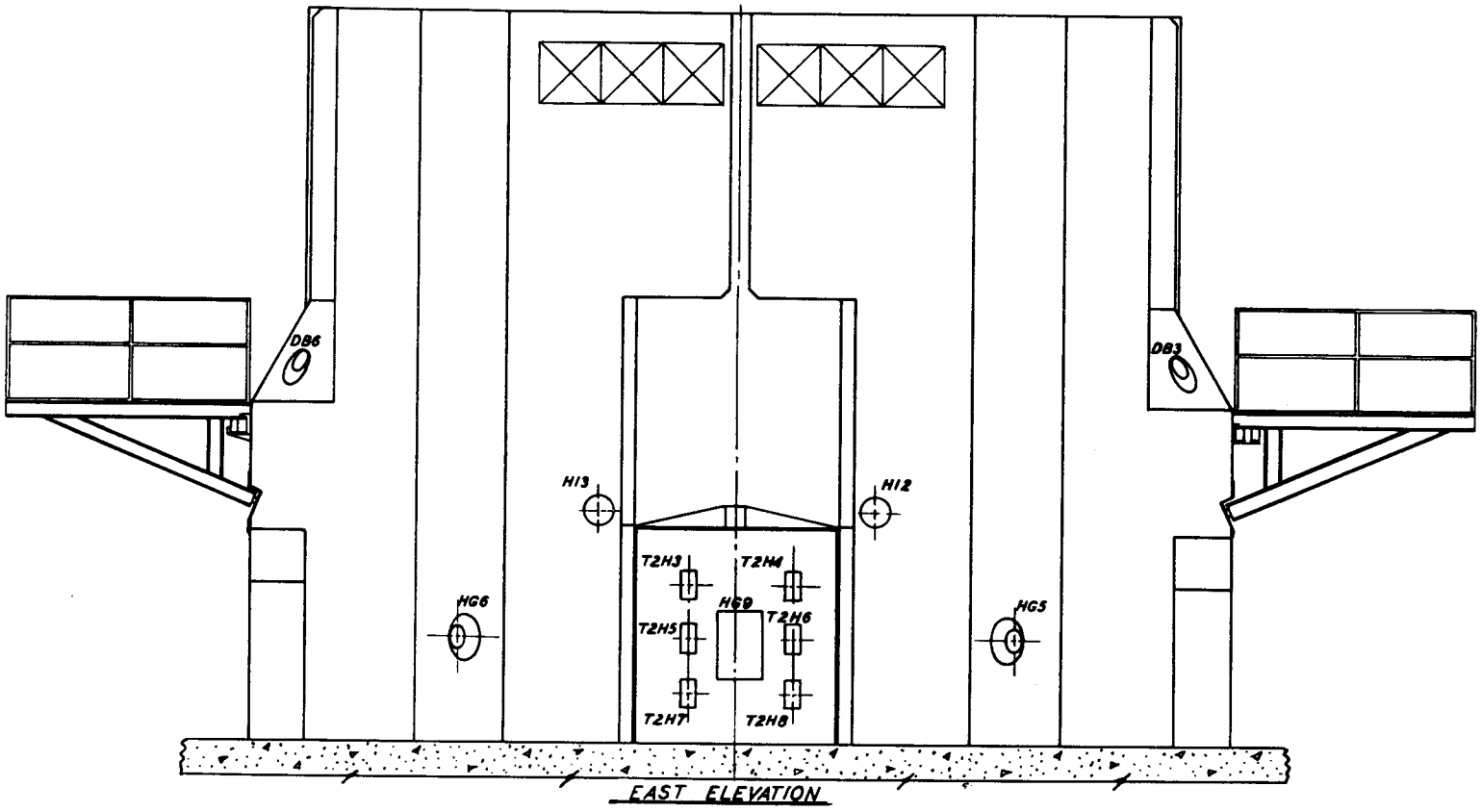

FIG. 3.B

MTR

VIEW OF EAST FACE OF REACTOR

DWG. #10203 [redacted]

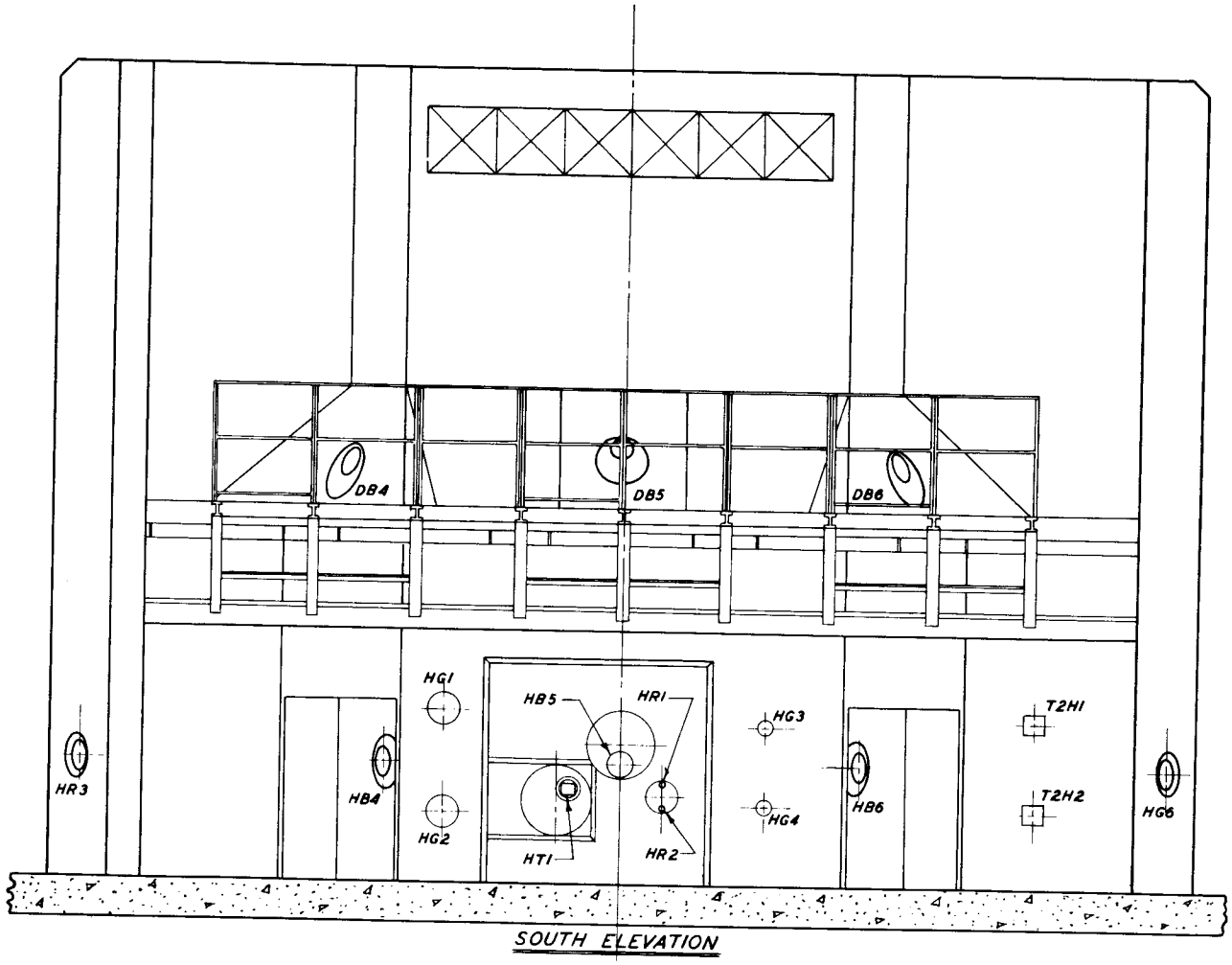

FIG. 3.C

MTR

VIEW OF SOUTH FACE OF REACTOR

DWG. #10201 [redacted]

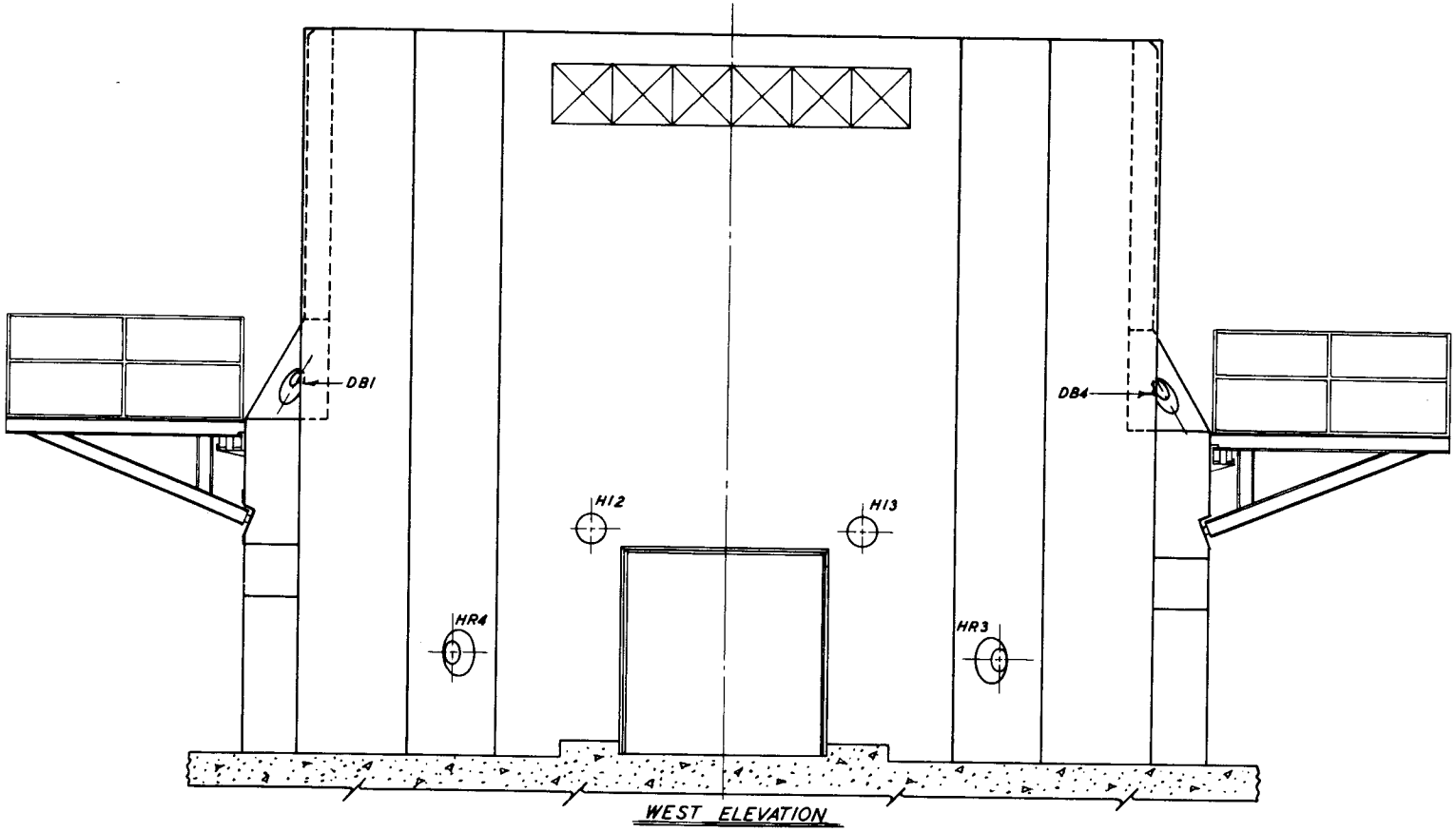

FIG. 3.D
MTR
VIEW OF WEST FACE OF REACTOR

DWG. # 10517 [redacted]

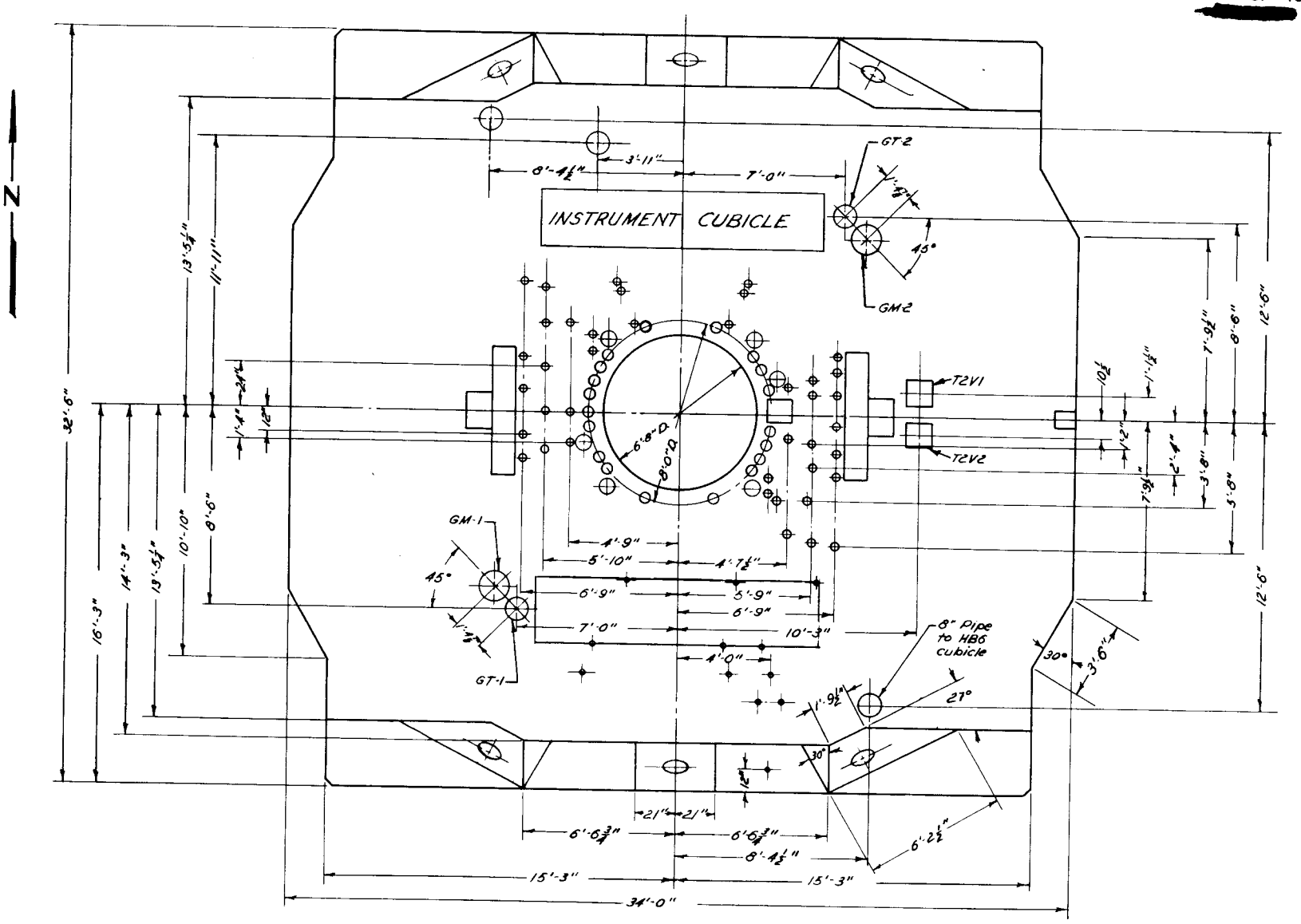

FIG. 3.E.
MTR
VIEW OF TOP OF REACTOR

OAK RIDGE NATIONAL LABORATORY

DWG # 10518 [redacted]

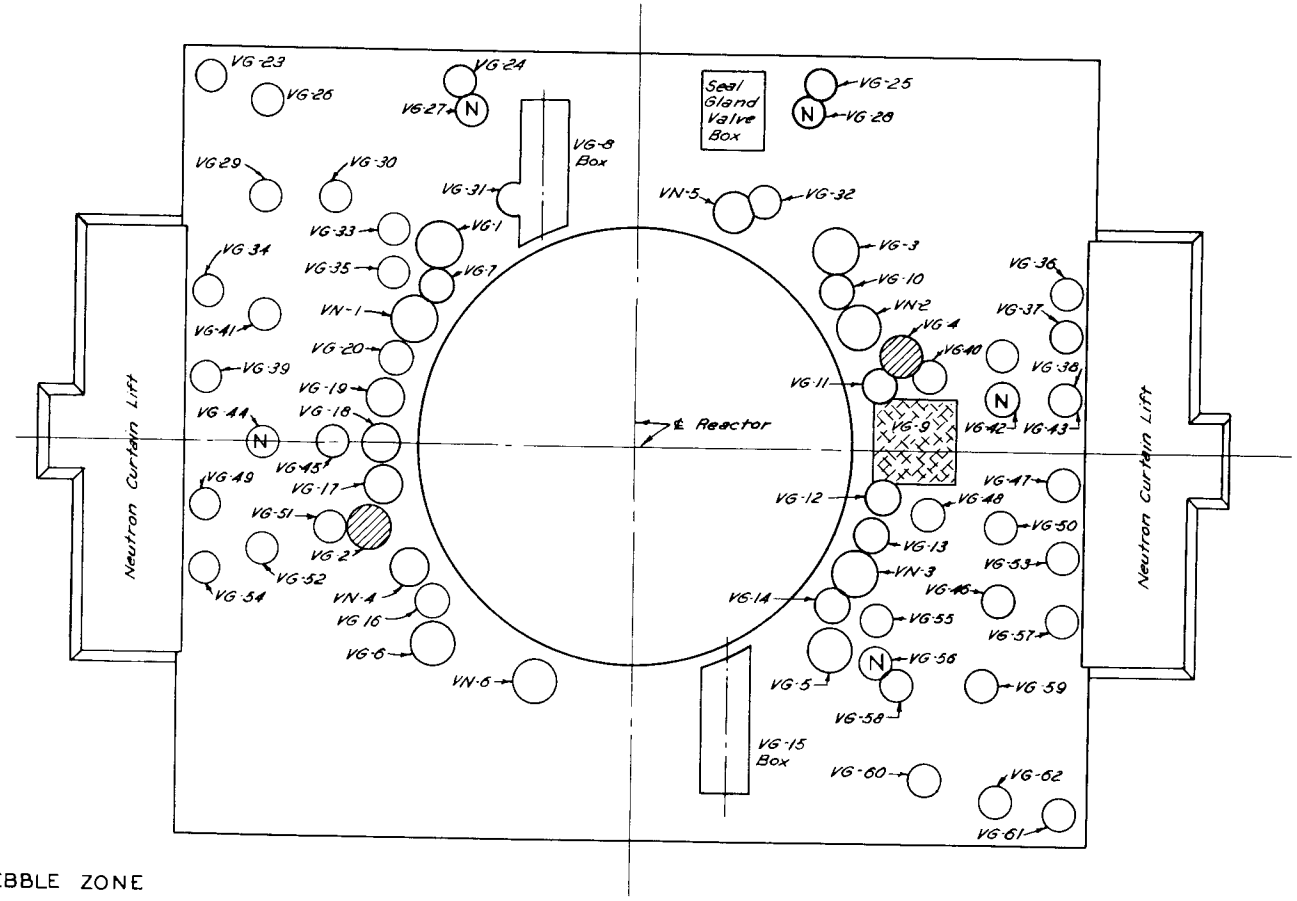

IN PEBBLE ZONE

THRU HOLES

TO HG-9 HOLE

N ----- NEUTRON THERMOMETER HOLE

FIG. 3.F

MTR

LOCATION OF EXP. FACILITIES ON REACTOR TOP

OAK RIDGE NATIONAL LABORATORY

NOT CLASSIFIED
DWG # 10742

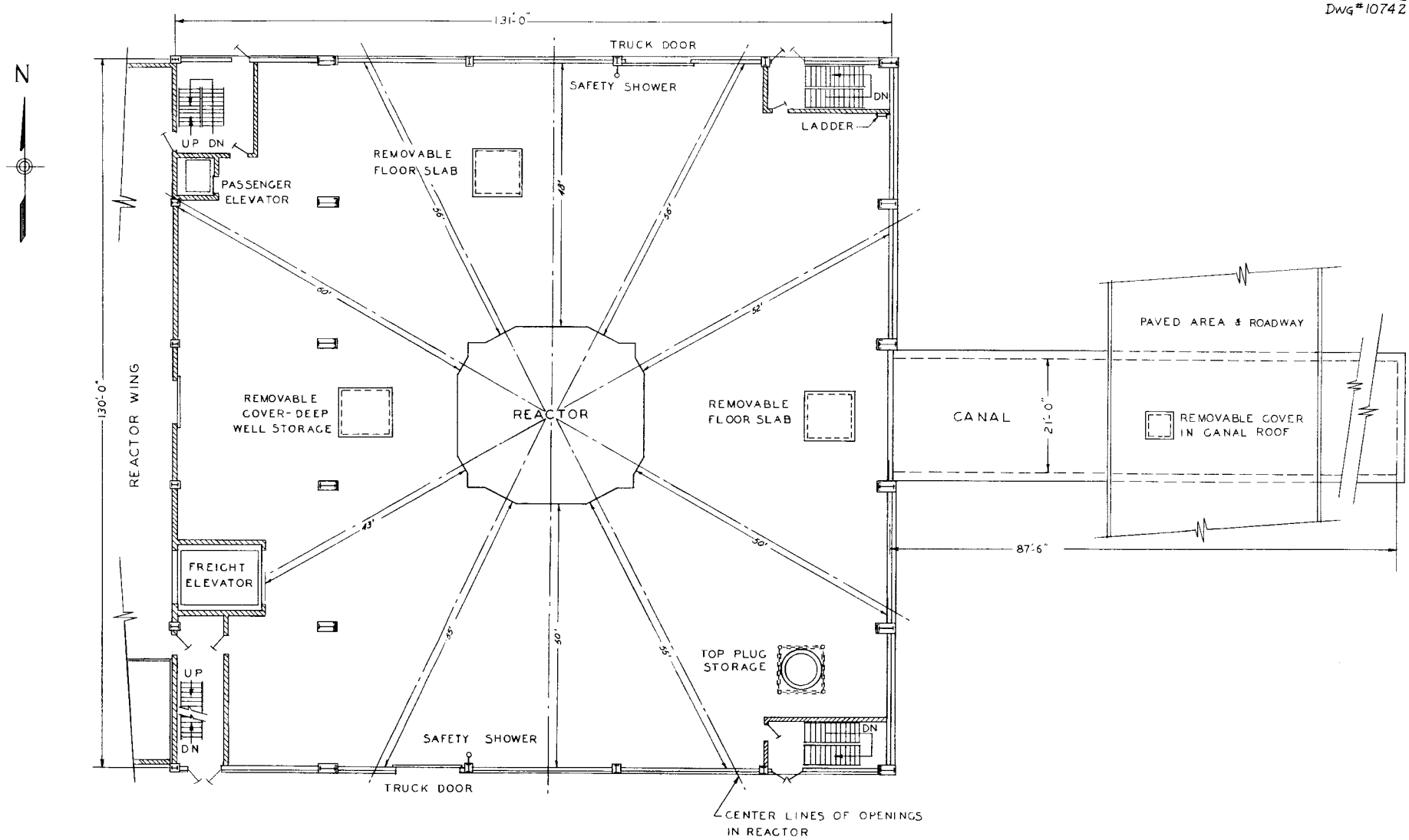

TOLERANCES:			ARGONNE NATIONAL LABORATORY	SYM.	CHANGE	DATE	BY
FRACTIONAL TOL. ± 1/32	CHIEF ENG.		This drawing is the property of the Argonne National Laboratory	PART	REACTOR BLDG.		
DECIMAL TOL. ± .005	CHIEF DRAFTSMAN			ASSEMBLY	FIRST FLOOR PLAN		
ANGLE ± 1°	CHECKED		SCALE / MATL. / NO. PROD.	SHEET OF	DRWG. NO. FIG. 3.G	ITEM NO.	
ALL REFERENCE TO PIPE SYSTEMS FOR WORK MUST BE AS DESIGNED UNLESS OTHERWISE NOTED	DRAWN F.T. 11-16-50		1/8" = 1'				
	GROUP REPRESENTATIVE WUTTERLEYSE						

Chapter 4

PHYSICS OF THE MATERIALS TESTING REACTOR

4.1 REVIEW OF REQUIREMENTS

The general aims of the Materials Testing Reactor are:

1. Attainment of a very high fast-neutron and thermal-neutron flux for general experimental and testing purposes.

2. Production, in sizeable quantities, of U^{233}, C^{14}, and other isotopes of interest in R.W.

3. Attainment of a flexible reactor in which the disposition of fissionable material may be readily altered in conformity with experimental needs.

4. Production of epithermal neutrons of the highest possible energy in order to test the behavior of reactor materials under high-intensity radiation (fast neutrons and γ rays).

5. Attainment of a reactor of such simplicity in design, servicing, and operation that it can serve as a prototype for research centers in which the AEC may deem a nuclear reactor desirable in the future.

In order for the reactor to satisfy these requirements, careful consideration had to be given to the minimum quantity of fissionable material which would be necessary at the flux level desired, the amount of foreign matter to be inserted, the need to reactivate the reactor within a few hours or less after shutdown and overcome fission product poisoning, temperature effect, and depletion of fissionable material, to name the most important.

This chapter will review briefly some of the theoretical considerations that were worked on in parallel with the critical experiments described in Appendixes 1, 2, and 3. Sections 4.2, 4.3, and 4.4 cover essentially the same material as MonP-272. Section 4.5 discusses heat production and removal. Section 4.6, on Shielding, is given in considerable detail because it covers the particular shielding problems of the present MTR and illustrates the assumptions and methods used in such calculations. It is to be hoped that

enough data will be taken from the MTR to check the validity of these calculations.

4.2 FLUX CALCULATIONS

One of the most important reasons for using a small-volume light water—moderated core instead of the large-volume heavy water—moderated core described in MonP-108 and in Appendix 1 is that the virgin neutron flux (fission neutrons which have suffered no collisions) and the γ-ray flux are much higher. The virgin flux, ϕ_0, is related to the number of fission neutrons produced per cubic centimeter, Q,* and to the inelastic macroscopic cross-section for virgin neutrons Σ_{in} by the relation

$$\phi = Q/\Sigma_{in}$$

The above equation is correct if the reactor dimensions are large compared to the mean free path, Σ_{in}^{-1}, of virgin neutrons.

In the present reactor Q is given by $\eta\Sigma_{U^{235}}\phi_s$ where ϕ_s is the average slow flux, 2×10^{14} cm^{-2} sec^{-1}, and $\Sigma_{U^{235}} = 0.059$ cm^{-1}, corresponding to 35.7 g of U^{235} per liter of reactor. The mean free path of virgin neutrons in the core of light water plus aluminum, with $V_{Al}/V_{H_2O} = 0.75$, is about 5 cm; thus

$$\phi_0 \approx 1.2 \times 10^{14} \text{ cm}^{-2} \text{ sec}^{-1}$$

The old proposed heavy water—moderated reactor had a core volume almost ten times greater than the present one, while the total power output, 3×10^4 kw, and virgin-neutron mean free path was the same. Its average virgin flux was thus smaller by a factor of 10. A comparison of the slow, resonance, and fast flux in these light water and heavy water reactors is given in Table 4.2.A.

A second desirable characteristic of the small-core light water—moderated reactor is that the thermal-neutron flux distribution is essentially flat in the core and for a short distance into the beryllium reflector is equal to or greater than the average core flux. The holdup of thermal neutrons in the

*The quantity Q is therefore proportional to the power per unit volume of the reactor.

TABLE 4.2.A

Fluxes in Light Water and Heavy Water Reactors

	LIGHT WATER	HEAVY WATER
Power (kw)	30×10^3	30×10^3
Power/volume (kw/liter)	357	37
Maximum virgin nv	$\sim 1.2 \times 10^{14}$	$\sim 0.15 \times 10^{14}$
Maximum epithermal nv	$\sim 6 \times 10^{14}$	$\sim 5 \times 10^{14}$
Maximum slow nv	$\sim 2 \times 10^{14}$	$\sim 2 \times 10^{14}$

reflector is due to the smaller rate of absorption in the beryllium as compared to the high k core.

The magnitude of the rise in the reflector depends on the size and shape of the reactor. In Figs. 4.2.A, B, and C the radial flux distributions as calculated for three cylindrical reactors with different k values are shown. In the largest reactor (lowest $k = 1.373$) the thermal flux rise in the reflector is least pronounced. The larger the reactor, the lower the rate of thermalization, which is proportional to ϕ_f, becomes in the reflector. This results in a decreased ϕ_s in the reflector. For a thin-slab reactor (Fig. 4.2.F) the rise of ϕ_s in the reflector is most pronounced because of the relatively high rate of thermalization in the beryllium near the core. The change from a circular to a rectangular horizontal cross-section reactor hardly affects the neutron flux distributions (compare Figs. 4.2.A and E).

Longitudinally the thermal flux in the $k = 1.373$ cylindrical reactor (Fig. 4.2.D) drops only by a factor of 2 before again rising in the top (or bottom) water plus aluminum reflector. The actual longitudinal distribution will be even flatter than that calculated because the side beryllium reflectors are longer than the reactor proper, and therefore extend into the top and bottom reflector region.

The thermal-neutron distribution in the reactor and its reflector will be modified by the presence of control rods, the thorium-breeding blanket, if

[redacted]

Dwg. No. 10894

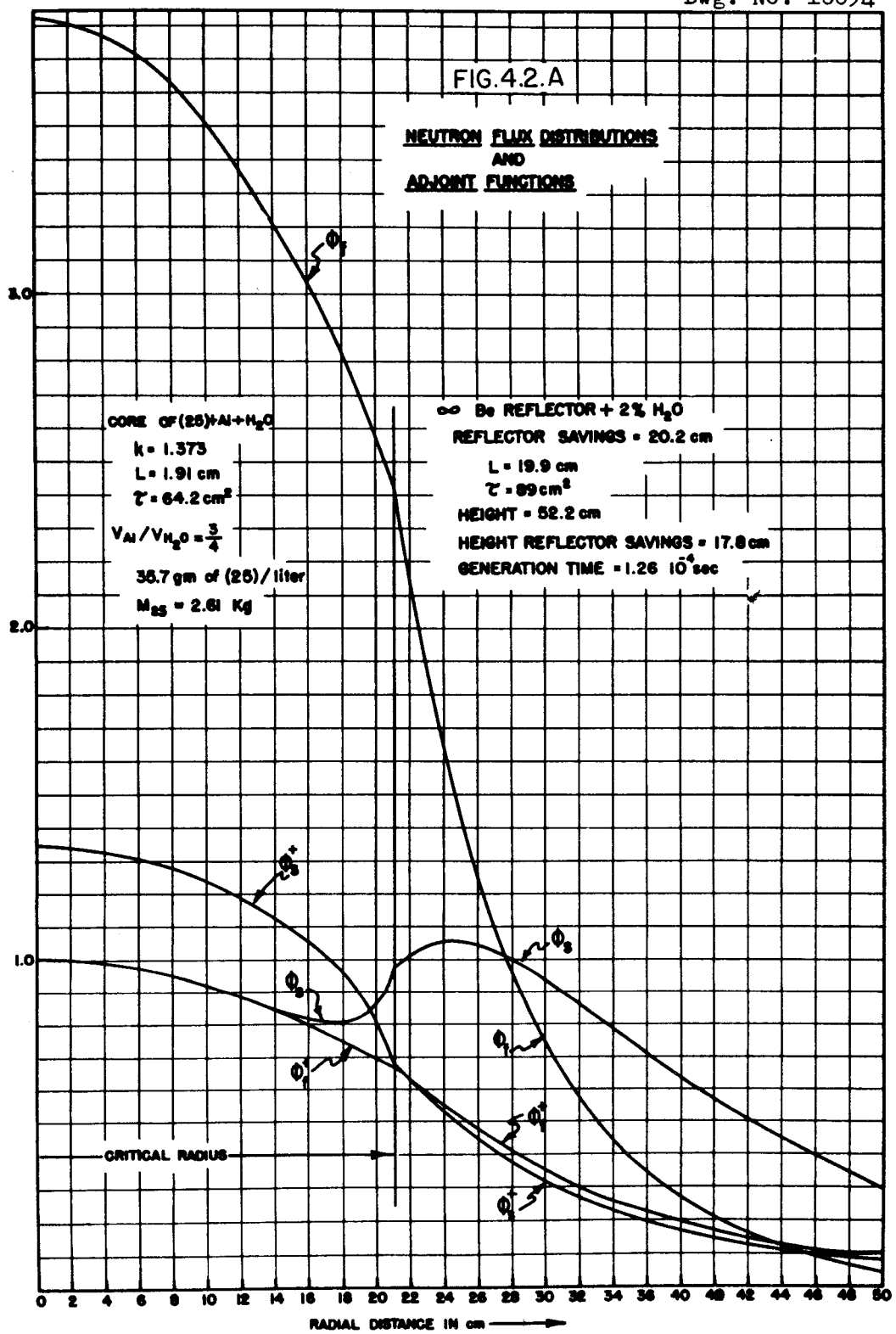

[redacted]

DWG. NO. 10895

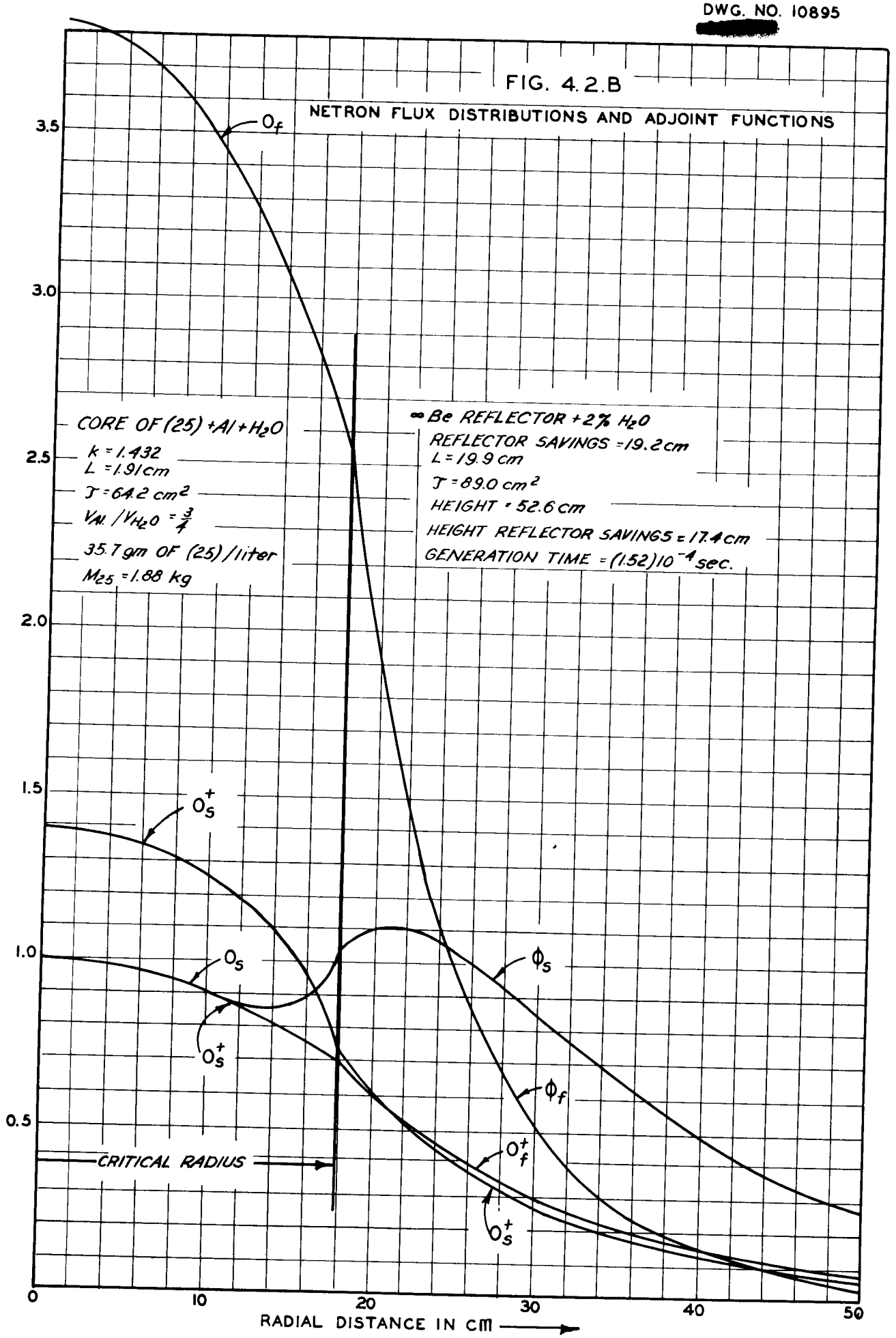
FIG. 4.2.B
NETRON FLUX DISTRIBUTIONS AND ADJOINT FUNCTIONS
O_f
CORE OF (25) + Al + H_2O
k = 1.432
L = 1.91 cm
τ = 64.2 cm^2
$V_{Al}/V_{H_2O} = \frac{3}{1}$
35.7 gm OF (25)/liter
M_{25} = 1.88 kg
∞ Be REFLECTOR + 2% H_2O
REFLECTOR SAVINGS = 19.2 cm
L = 19.9 cm
τ = 89.0 cm^2
HEIGHT = 52.6 cm
HEIGHT REFLECTOR SAVINGS = 17.4 cm
GENERATION TIME = $(1.52)10^{-4}$ sec.
O_s^+
O_s
ϕ_s
O_s^+
ϕ_f
O_f^+
O_s^+
CRITICAL RADIUS
3.5
3.0
2.5
2.0
1.5
1.0
0.5
0
10
20
30
40
50
RADIAL DISTANCE IN cm

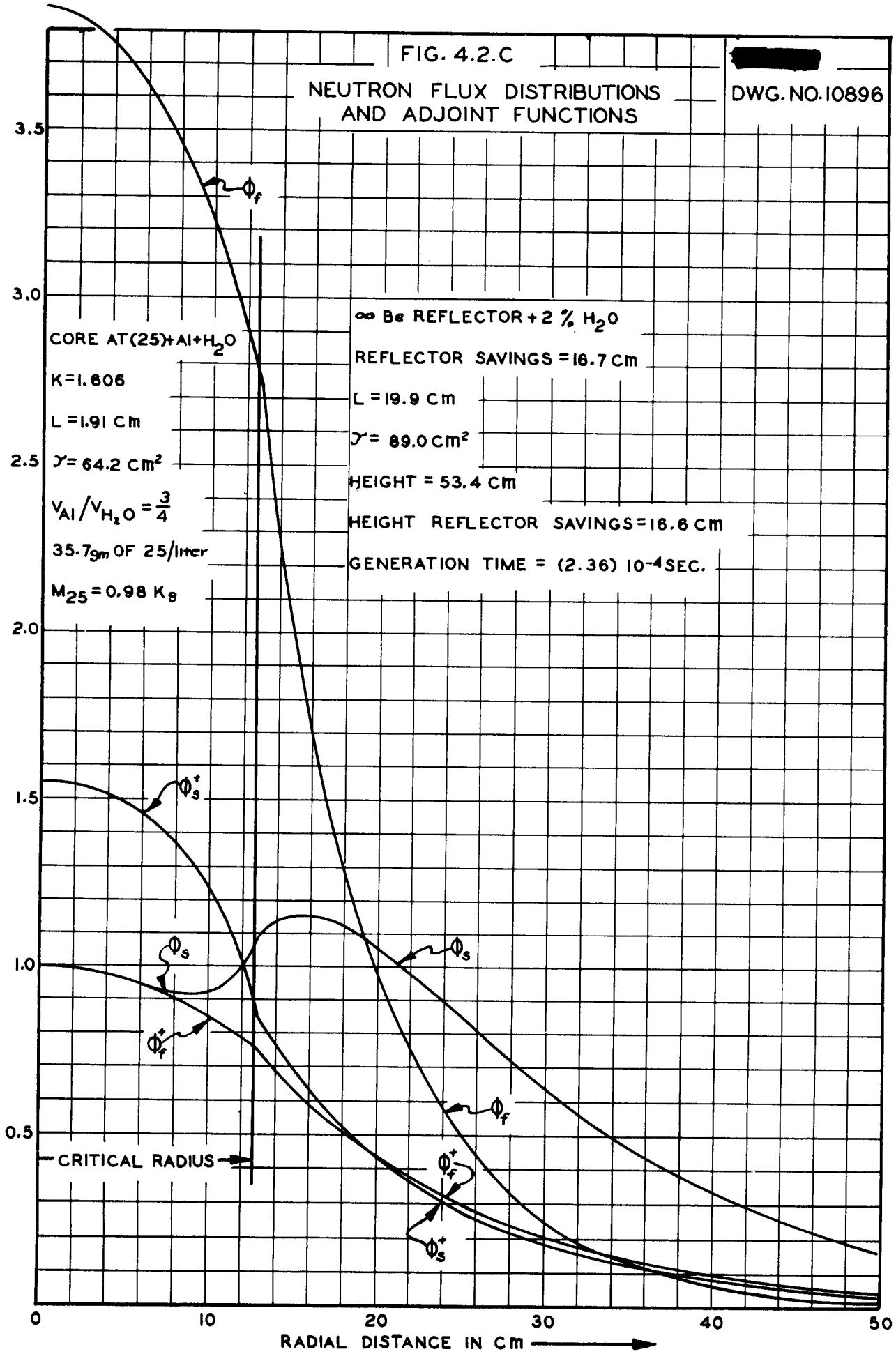
FIG. 4.2.C
NEUTRON FLUX DISTRIBUTIONS AND ADJOINT FUNCTIONS
[redacted]
DWG. NO. 10896
CORE AT(25)+Al+H2O
K=1.606
L=1.91 Cm
γ=64.2 Cm²
VAl/VH2O = 3/4
35.7gm OF 25/liter
M25=0.98 Kg
∞ Be REFLECTOR + 2 % H2O
REFLECTOR SAVINGS = 16.7 Cm
L = 19.9 Cm
γ = 89.0 Cm²
HEIGHT = 53.4 Cm
HEIGHT REFLECTOR SAVINGS = 16.6 Cm
GENERATION TIME = (2.36) 10⁻⁴ SEC.
φf
φs+
φs
φs
φf+
φf
φf+
φs+
CRITICAL RADIUS
3.5
3.0
2.5
2.0
1.5
1.0
0.5
0
10
20
30
40
50
RADIAL DISTANCE IN Cm

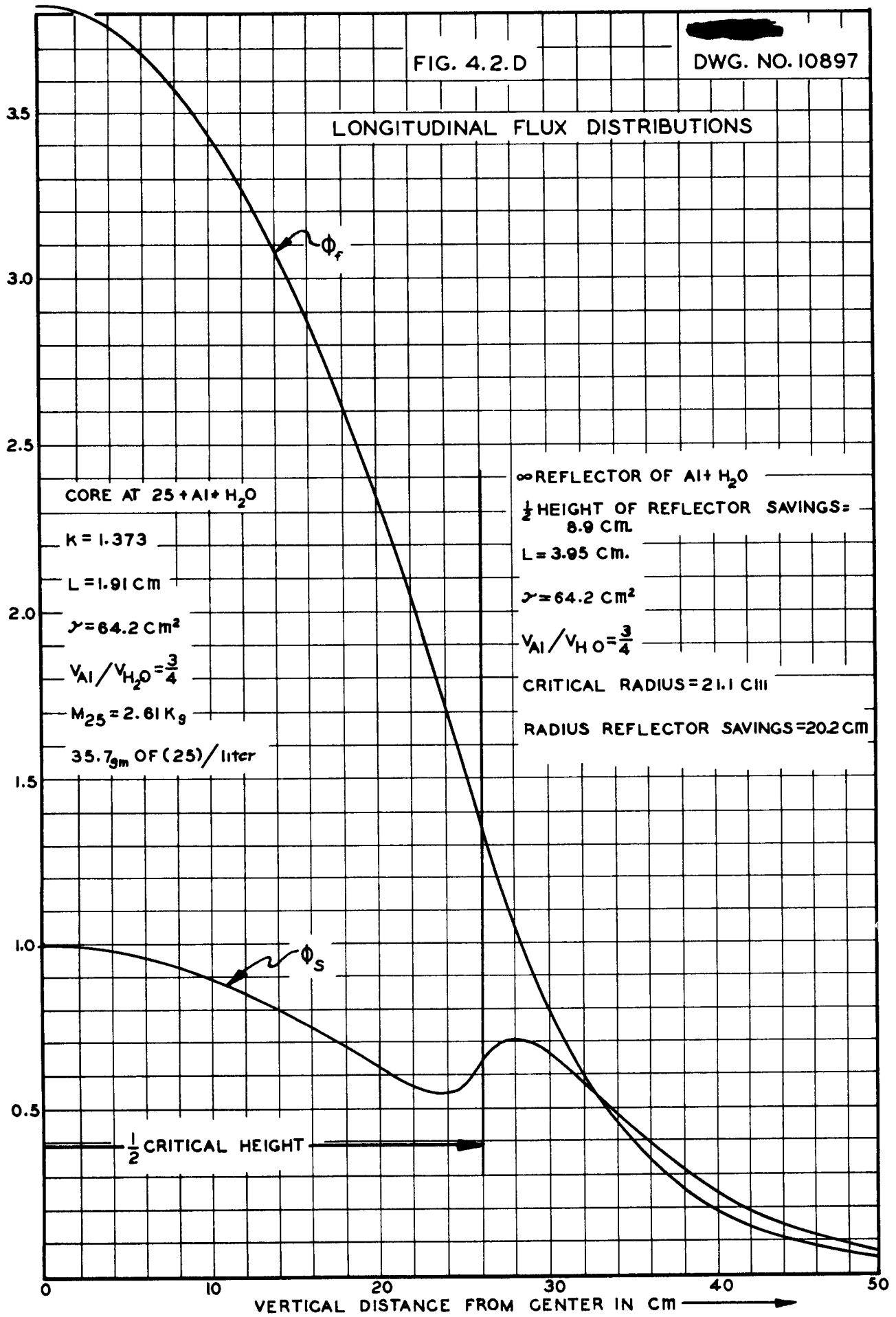
FIG. 4.2.D
[redacted]
DWG. NO. 10897
LONGITUDINAL FLUX DISTRIBUTIONS
ϕ_f
ϕ_s
CORE AT 25 + Al + H_2O
K = 1.373
L = 1.91 cm
γ = 64.2 cm²
$V_{Al}/V_{H_2O} = \frac{3}{4}$
M_{25} = 2.61 Kg
35.7 gm OF (25)/liter
∞ REFLECTOR OF Al + H_2O
½ HEIGHT OF REFLECTOR SAVINGS = 8.9 cm
L = 3.95 cm.
γ = 64.2 cm²
$V_{Al}/V_{H_2O} = \frac{3}{4}$
CRITICAL RADIUS = 21.1 cm
RADIUS REFLECTOR SAVINGS = 20.2 cm
½ CRITICAL HEIGHT
3.5
3.0
2.5
2.0
1.5
1.0
0.5
0
10
20
30
40
50
VERTICAL DISTANCE FROM CENTER IN cm

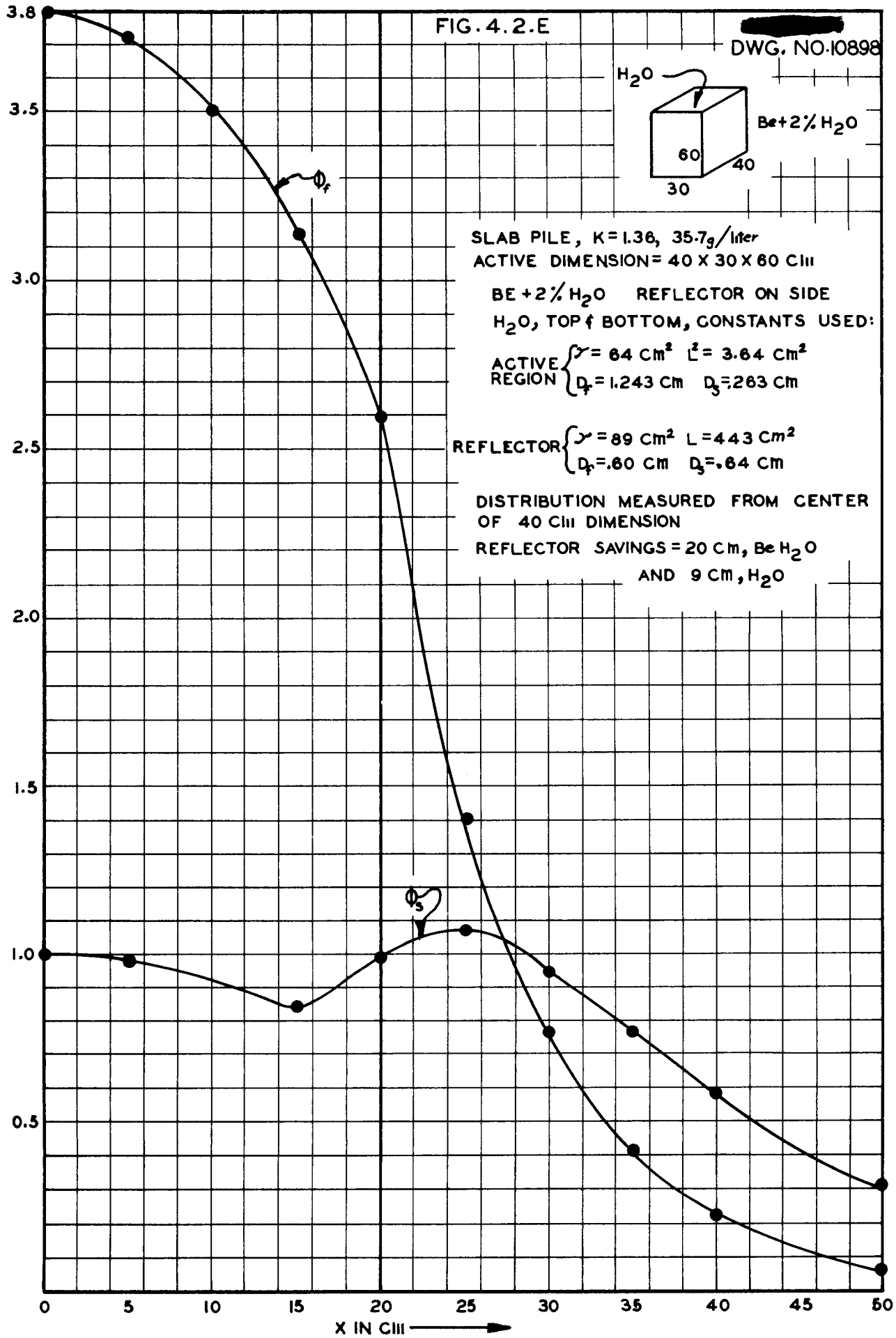
FIG. 4.2.E
[redacted]
DWG. NO. 10898
H_2O
Be+2% H_2O
60
40
30
SLAB PILE, K=1.36, 35.7g/liter
ACTIVE DIMENSION = 40 X 30 X 60 Cm
BE + 2% H_2O REFLECTOR ON SIDE
H_2O, TOP & BOTTOM, CONSTANTS USED:
ACTIVE REGION γ = 64 Cm² L^2 = 3.64 Cm²
D_f = 1.243 Cm D_s = .263 Cm
REFLECTOR γ = 89 Cm² L = 4.43 Cm²
D_f = .80 Cm D_s = .64 Cm
DISTRIBUTION MEASURED FROM CENTER OF 40 Cm DIMENSION
REFLECTOR SAVINGS = 20 Cm, Be H_2O
AND 9 Cm, H_2O
ϕ_f
ϕ_s
3.8
3.5
3.0
2.5
2.0
1.5
1.0
0.5
0
5
10
15
20
25
30
35
40
45
50
X IN Cm

[redacted]

FIG. 4.2.F

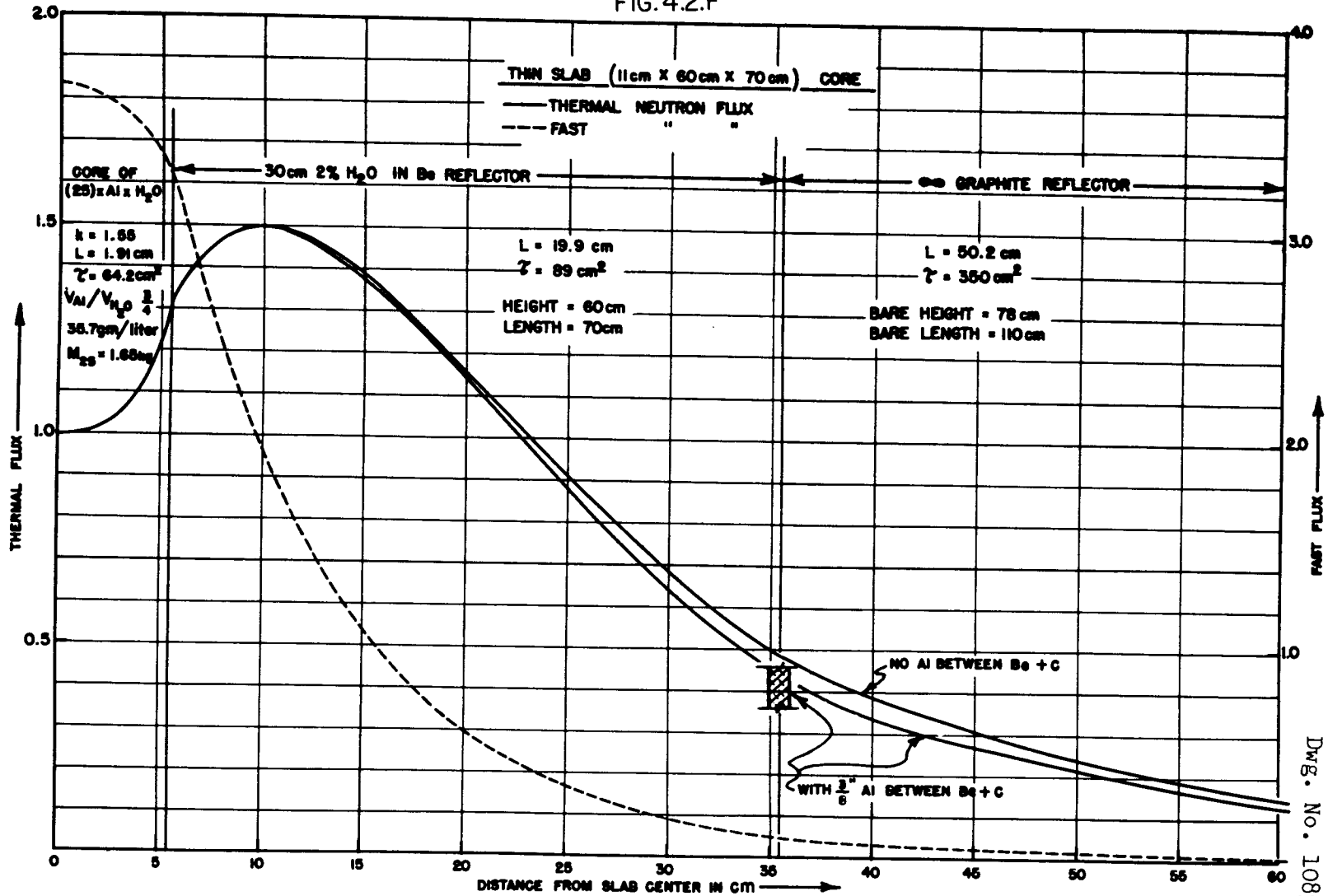

Dwg. No. 10899

used, and the aluminum tank wall. When cadmium control rods are near the center of the core, the flux in the reflector is relatively greater than the average core thermal flux because the cadmium rods cause a central depression of the neutron flux. A high ratio of reflector to average core neutron flux makes for maximum experimental usefulness with minimum expenditure of fuel.

The thermal flux in the useful experimental region is lowered considerably when a thorium blanket surrounds the reactor. Figure 4.2.G shows the magnitude of this depression produced by a sheet of thorium 1.26 cm thick placed at 20 cm from both sides of the rectangular cross-section core. Its effect on k is slight, $\Delta k/k = -0.4\%$.

The presence of the aluminum tank wall between the beryllium and graphite lowers the thermal flux slightly. At its position nearest to the core (30 cm) when the core is the thinnest possible slab (thus highest flux at the aluminum-graphite boundary), the aluminum depresses the thermal flux by only 14% as shown in Fig. 4.2.F. This figure may be used to estimate the flux at various positions in the reflector when thorium is not present. If the thermal flux is normalized to 2×10^{14} at the edge of the reactor, then the flux will rise to about 2.3×10^{14} in the beryllium 5 cm from the reactor surface. At the beryllium-graphite interface the slow neutron flux is about 6×10^{13}, and at the thermal shield it is about 3×10^{11}. These figures are, of course, very rough.

The calculations of the flux distributions were made according to a simple two-group diffusion theory. Experiments described in Appendix 2 indicate that these calculations predict a smaller slow-neutron rise in the reflector than is actually observed.

4.3 REACTIVITY LOSSES

For various reasons, e.g., Xe^{135} poisoning, depletion of U^{235}, etc., the reactivity of the reactor is lower during high-power operation than during zero-power operation. The reactor therefore must be built considerably larger than is necessary to be critical in the cold, clean state. Before summarizing the reactivity losses which are entailed by Xe^{135} + Sm^{149}, depletion of U^{235}, and temperature rise, the conventions for expressing reactivity loss will be reviewed briefly:

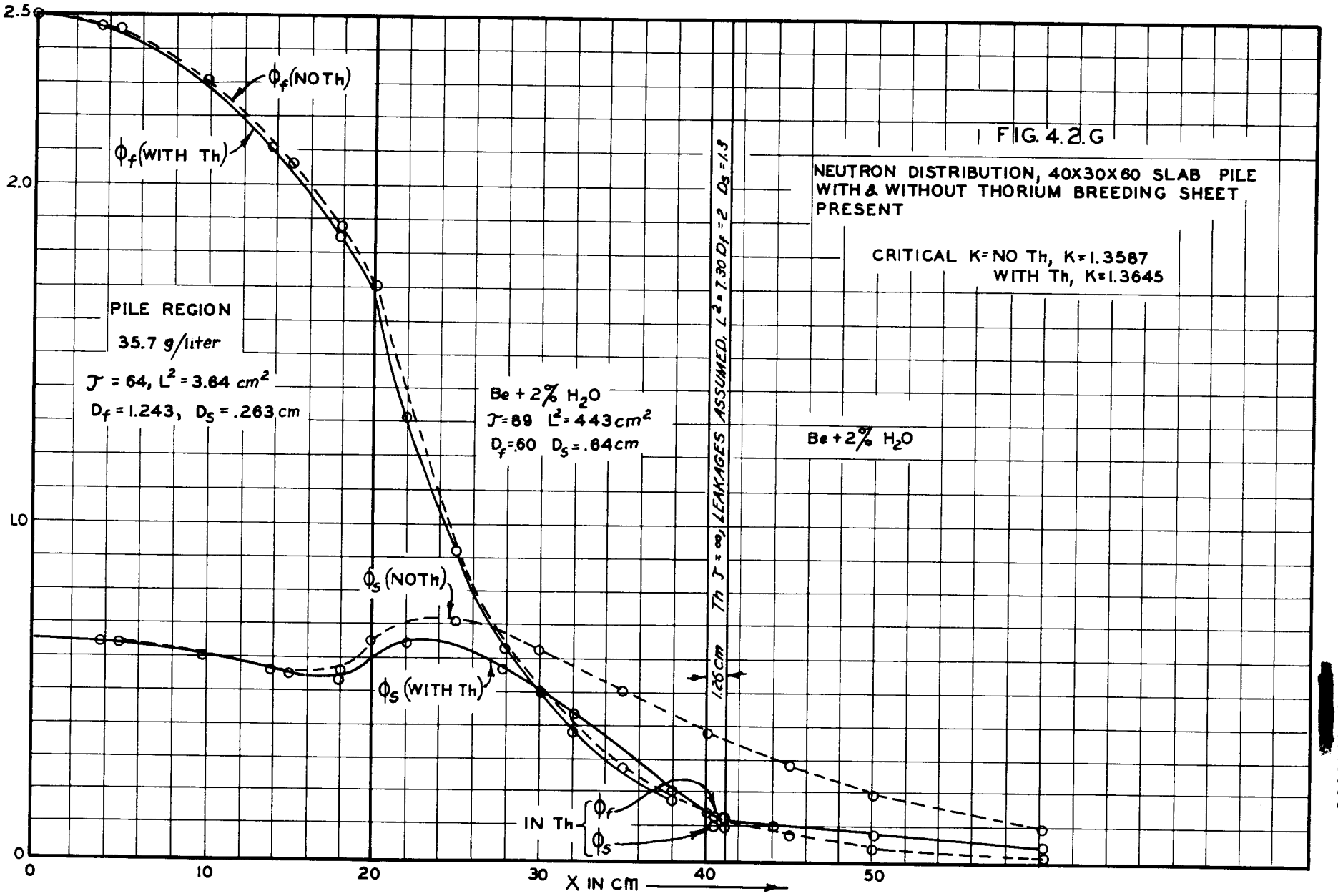

FIG. 4.2.G

NEUTRON DISTRIBUTION, 40X30X60 SLAB PILE WITH & WITHOUT THORIUM BREEDING SHEET PRESENT

CRITICAL K= NO Th, K=1.3587
WITH Th, K=1.3645

DWG. NO. 10900

If a poison is placed in or removed from a reactor which is just critical, the neutron density will decay or rise with a period T. This period is directly proportional to the change in reactivity, which we denote by

$$\Delta k_{eff}/k_{eff}$$

by the usual in-hour formula

$$\frac{\Delta k_{eff}}{k_{eff}} = \frac{l}{kT} + \sum_i \frac{\beta_i \tau_i}{\tau_i + T} \tag{1}$$

where l is the generation time, and β_i and τ_i are the abundance and the mean life of the ith delayed neutron group. The k in this formula is always the value of k *after* the change in poison has been made.

It is possible to calculate the reactivity change $\Delta k_{eff}/k_{eff}$, and therefore the period T, in terms of the absorption cross-section of the poison and its position in the reactor. More generally, if any perturbation is imposed on the reactor, e.g., if the density of the moderator is changed, then the reactivity will change in a manner which is calculable in terms of the magnitude of the perturbation and its position in the reactor.

The critical equation in two-group reactor theory is

$$k = (1 + \tau B^2)(1 + L^2 B^2)$$

where τ = age of fission neutrons.

L = diffusion length.

B^2 = "buckling" or "Laplacian" of the reactor.

When

$$\frac{k}{(1 + \tau B^2)(1 + L^2 B^2)} = 1$$

the system is chain reacting and in a steady state, and k_{eff} is defined as

$$k_{eff} = \frac{k}{(1 + \tau B^2)(1 + L^2 B^2)} .$$

In the MTR core $\tau \approx 64\ cm^2$, $L^2 \approx 3.5$ cm, and $B^2 \approx 10^{-2}\ cm^{-2}$.

If an absorber is uniformly distributed in the core, it will affect k primarily but, to a much lesser extent, it will also affect L^2. The latter effect can be neglected when $L^2 << \tau$ and we may then write

$$\frac{\Delta k_{eff}}{k_{eff}} = \frac{\Delta k}{k}$$

It will be recalled that

$$k = p\epsilon\eta f$$

when

η = number of neutrons produced for each thermal neutron absorbed in uranium.

ϵ = fast multiplication factor = $\frac{\text{number of fast neutrons from all fissions}}{\text{number of neutrons from thermal fissions}}$

p = resonance escape probability = fraction of neutrons escaping resonance capture and thus becoming thermal neutrons.

f = thermal utilization factor = fraction of all thermal neutrons produced which is absorbed in fuel material.

However, in a small enriched reactor such as the MTR, both p and ϵ are sufficiently close to unity that, to a very good approximation,

$$k = \eta f = \eta \frac{\Sigma_{U^{235}}}{\Sigma_{reactor}}$$

where $\Sigma_{U^{235}} = N\sigma_{U^{235}}$.

$$\Sigma_{reactor} = N\sigma_{U^{235}} + N\sigma_{H_2O} + N\sigma_{Al} + N\sigma_{poison}$$

It is then possible to write, when an absorber is placed in the core,

$$\frac{\Delta k}{k} = \frac{\Delta\Sigma}{\Sigma_{reactor}}$$

In this expression k and $\Sigma_{reactor}$ always pertain to the situation *after* a change has been made.

The effect of a local change in the reactor is a fairly sensitive function of position. Experiments described in Appendix 3 have shown that an absorber is about twice as effective in the center of the core as at the edge, and the importance of an absorber diminishes rapidly as its distance from the core increases. This, of course, means that experiments can be done in the reflector, where the thermal flux is very high, without producing a major change in reactivity.

For detailed treatment of the equations and effects discussed above, the reader is referred to Glasstone and Edlund, *Elements of Nuclear Reactor Theory*.[65]

The major perturbations which occur in the reactor are Xe^{135} + Sm^{149} poisoning, U^{235} depletion, and temperature rise. The reactivity loss, $\Delta k/k$, for each of these has been calculated and is discussed below.

4.3.1 Xe^{135} and Sm^{149} Poisoning. When the reactor operates at a uniform flux of 2×10^{14}, i.e., at 10,000 kw per kilogram of U^{235}, the steady state reactivity loss due to Xe^{135} is $\Delta k/k$ = 3.9% and that due to Sm^{149} is $\Delta k/k$ = 1.0%, making a total steady state loss of 4.9%. The manner in which these losses are reached after start-up is indicated in Figs. 4.3.A and B.

After shutdown the Xe^{135} produced by I^{135} decay builds up and goes through a maximum at 11 hr; at this time the additional reactivity loss due to Xe^{135} growth = 40.6%. The total extra Xe^{135} loss is somewhat less than this because any Xe^{135} which is already present at shutdown simply decays without going through a maximum. The time course of the Xe^{135} which grows from I^{135} is shown in Fig. 4.3.C (curve labeled $I^{135} \longrightarrow Xe^{135} \longrightarrow Cs^{135}$), and the time course of the Xe^{135} which decays directly is given in the curve labeled $Xe^{135} \longrightarrow Cs^{135}$.

The Sm^{149} is a daughter of Il^{149}; its concentration therefore increases after shutdown. The extra loss due to it would, at very long times after shutdown, eventually reach $\Delta k/k$ = 3.3%.

The overall time behavior of the extra reactivity loss is also given in Fig. 4.3.C. It is seen that in order to override the Xe^{135} + Sm^{149} loss at

[redacted]

FIG.4.3.A

REACTIVITY LOSS $\frac{-\delta k}{k}$, DUE TO Xe^{135}, Sm^{149}, 25 DEPLETION AND BUILD UP OF LOW CROSS-SECTION FISSION PRODUCTS AS FUNCTION OF TIME OF OPERATION

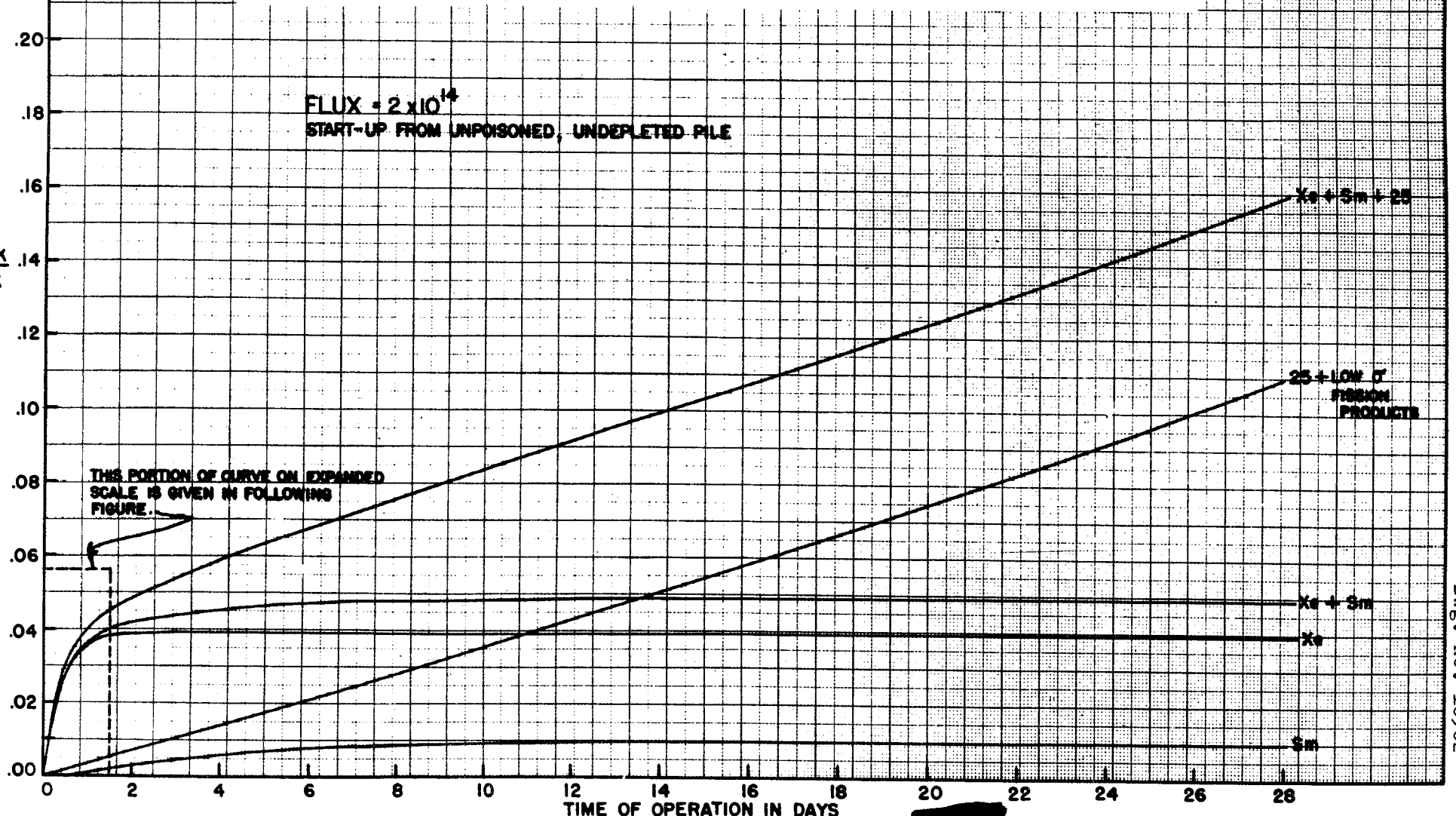

[redacted]

Dwg. No. 10902

[redacted]

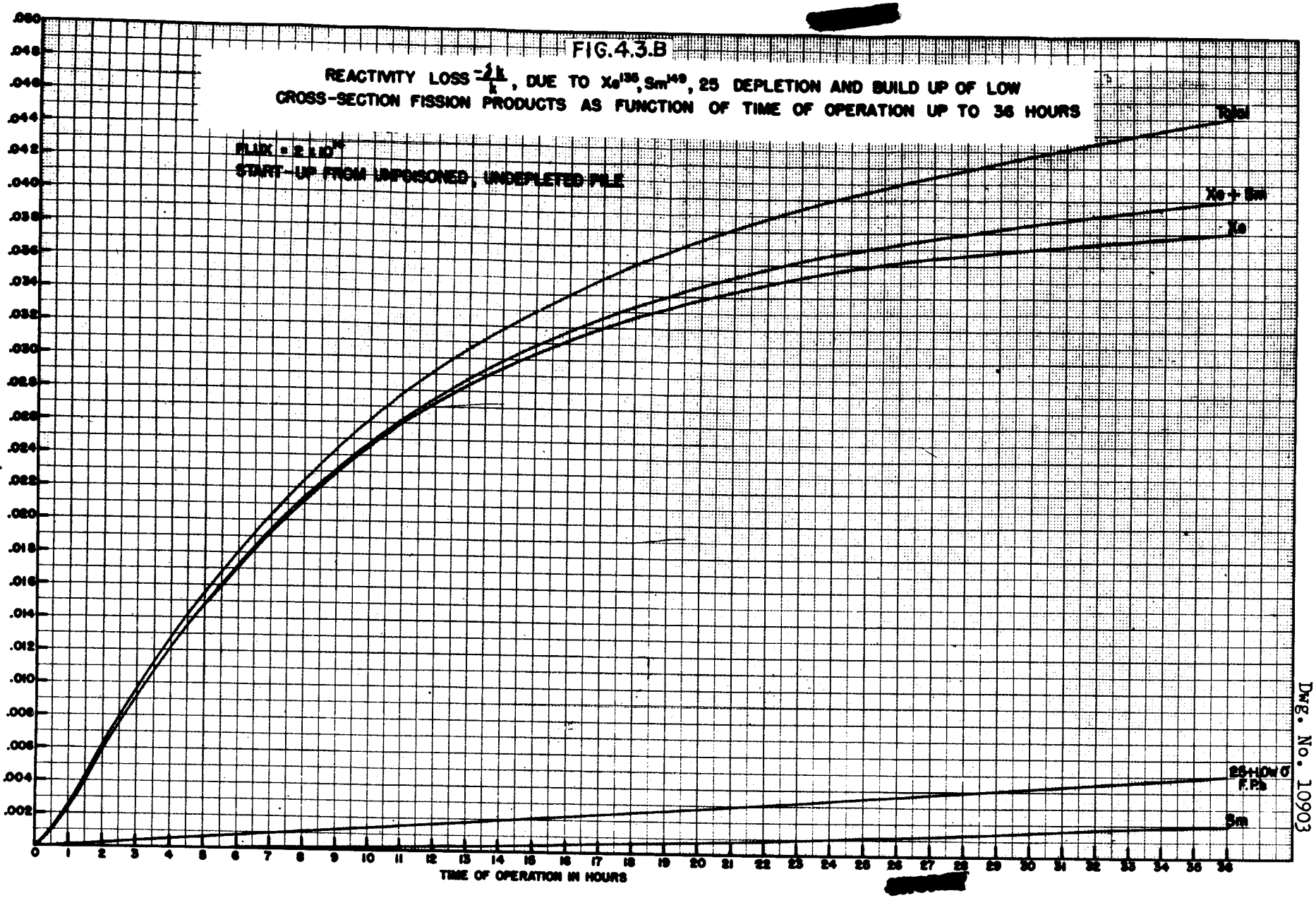

[redacted]

Dwg. No. 10903

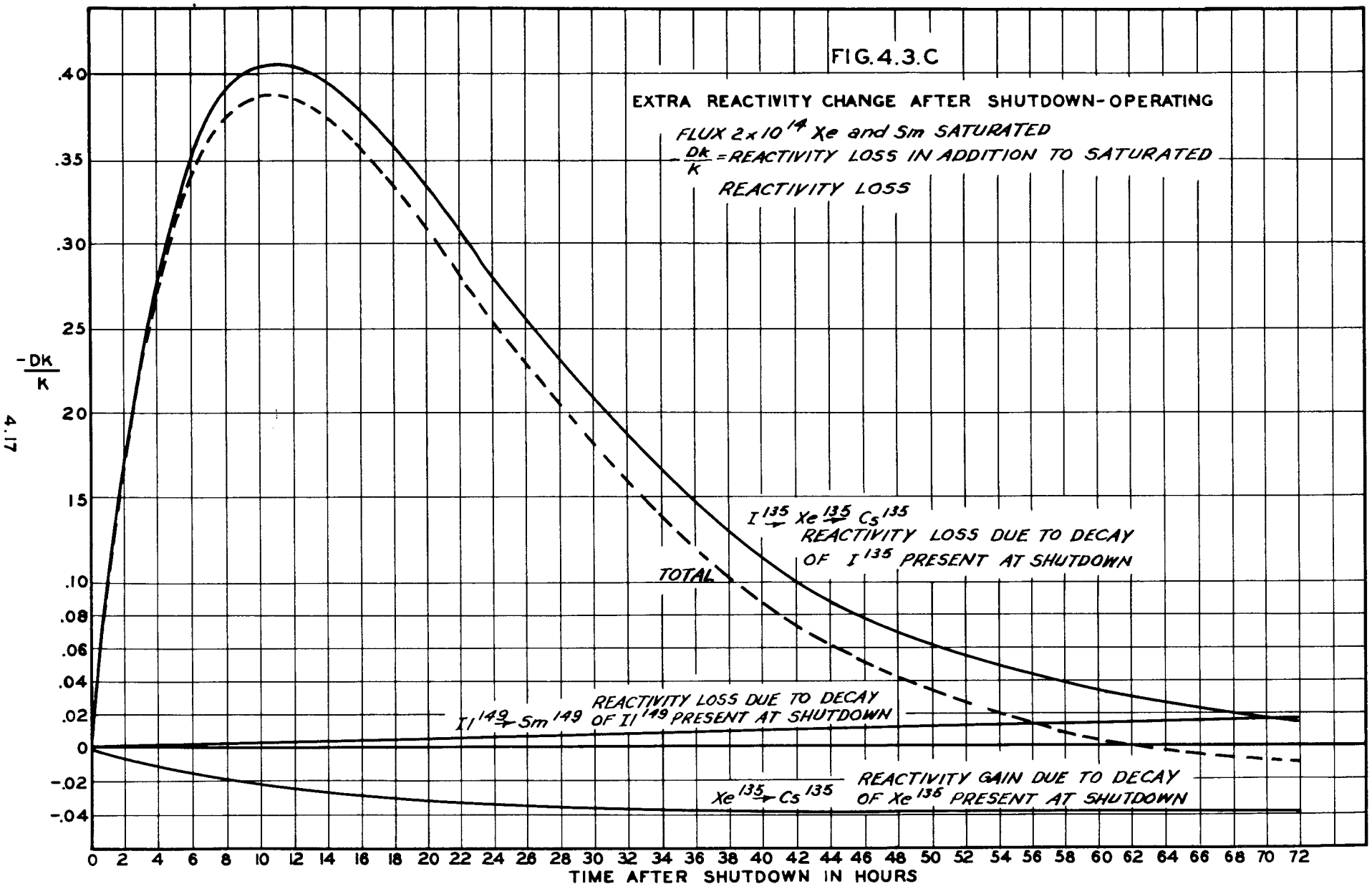
FIG. 4.3.C
EXTRA REACTIVITY CHANGE AFTER SHUTDOWN-OPERATING
FLUX 2x10^14 Xe and Sm SATURATED
-Dk/K = REACTIVITY LOSS IN ADDITION TO SATURATED REACTIVITY LOSS
I^135 → Xe^135 → Cs^135
REACTIVITY LOSS DUE TO DECAY OF I^135 PRESENT AT SHUTDOWN
TOTAL
I^149 → Sm^149
REACTIVITY LOSS DUE TO DECAY OF I^149 PRESENT AT SHUTDOWN
Xe^135 → Cs^135
REACTIVITY GAIN DUE TO DECAY OF Xe^135 PRESENT AT SHUTDOWN
-DK/K
.40
.35
.30
25
20
15
.10
.08
.06
.04
.02
0
-.02
-.04
0 2 4 6 8 10 12 14 16 18 20 22 24 26 28 30 32 34 36 38 40 42 44 46 48 50 52 54 56 58 60 62 64 66 68 70 72
TIME AFTER SHUTDOWN IN HOURS

DWG. NO. 10904

all times, an excess k equal to the sum of the net extra loss, 38.8%, plus the equilibrium loss, 4.9%, or $\Delta k/k$ = 43.7% is needed.

It was not regarded as a practical necessity that so much reactivity be built unto the reactor that it could override the Xe^{135} at all times after shutdown.* However, there should be sufficient extra reactivity so that every accidental scram does not keep the reactor shut down for several days. It was felt that if the reactor can override ½ hr of accumulated Xe^{135} + Sm^{149}, it will ordinarily have sufficient operational flexibility. To achieve this it is necessary, according to Fig. 4.3.C, to build into the reactor an excess reactivity of 9.6% (4.7% for reactivity loss in 30 min after shutdown plus 4.9% equilibrium loss). With this available $\Delta k/k$ the machine can be started up within the first half hour after a scram, or after two days if not started during the "grace" period.

It should be clear from this discussion that much more care is needed to shut down and start up this reactor than is needed for the graphite reactors.

4.3.2 Depletion of U^{235} and Other Fission Product Poisoning. It is estimated that there will be a loss of 0.35% per day in $\Delta k/k$ attributable to the depletion of U^{235} and accumulation of low-cross-section fission products (σ_a is assumed to be 50 barns per fission) if the reactor runs at 10,000 kw per kilogram. A running cycle of about ten days was used for the computation, which means that about 3.5% in $\Delta k/k$ must be available to override the depletion loss. The depletion and low-cross-section fission product loss is plotted as a function of time in Figs. 4.3.A and B (curves labeled "25"). The total loss due to depletion, low-cross-section fission products, and Xe^{135} + Sm^{149} is also given in these figures.

4.3.3 Temperature Coefficient. As the temperature of the reactor rises, the reactivity falls. The reactivity temperature coefficient, defined as the change in $\Delta k/k$ per degree centigrade temperature rise in the reactor, is the sum of three partial coefficients. These partial coefficients arise from

1. Expansion of the fuel-bearing aluminum plates,
2. Expansion of water between fuel plates,
3. Change in microscopic cross-sections with temperature.

*Operational requirements of the STR, designed subsequently to the MTR, have dictated that sufficient reactivity be incorporated to override Xe^{135} at all times.

Effects 1 and 2 are functions of the bulk temperature of the plates and H_2O, respectively. Effect 3 is a function only of the neutron temperature. To determine the neutron temperature from the H_2O temperature is not easy; it is supposed that the two are equal.

In Table 4.3.A are tabulated the partial temperature coefficients at 20°C calculated for three cylindrical reactors of 12.78, 17.85, and 21.12 cm active radii, respectively. All are approximately 53 cm high and V_{Al}/V_{H_2O} = 0.75. The usual adjoint perturbation theory was used for the calculation.

TABLE 4.3.A

Partial Temperature Coefficients at 20°C, Al-H_2O Neutron Temperature

Reactor	r = 12.78 k = 1.606	r = 17.85 k = 1.432	r = 21.12 k = 1.373
Coefficient (1) in $\Delta k/k/°C$	-1.6×10^{-5}	-1.4×10^{-5}	-1.3×10^{-5}
Coefficient (2)	-3.8×10^{-5}	-3.0×10^{-5}	-2.8×10^{-5}
Coefficient (3)	-15.7×10^{-5}	-10.5×10^{-5}	-8.9×10^{-5}
Total coefficient	-21×10^{-5}	-15×10^{-5}	-13×10^{-5}

During summer operation at 10 kw/per gram of U^{235} the water will enter the reactor at about 100°F (39°C) and leave it at 115°F (47.3°C). The maximum aluminum temperature will be about 50°C higher than the average water temperature. The lowest reactor temperature will occur during winter shutdown; at this time water and aluminum will be at about 10°C. Thus the yearly temperature range of the water (and the neutrons) is about 35°C, and the temperature range of the aluminum is about 70°C. The maximum reactivity loss in the k = 1.606 reactor due to temperature rise is therefore: 0.11% in $\Delta k/k$ due to aluminum temperature rise and 0.68% in $\Delta k/k$ due to water and neutron temperature rise, making a total of 0.79%. For the k = 1.373 reactor the figure would be 0.5%. The temperature loss computed here is total loss from winter shutdown to summer operating conditions. The loss in reactivity from summer

shutdown to summer operating is very much less than 0.78%; it is only about 0.2%, which is the amount of $\Delta k/k$ that must be held by the regulating rods. The larger variation between summer and winter operation and shutdown can be taken care of by the shim rods.

4.3.4 Thorium Blanket. The calculated critical masses are for a reactor with an infinite Be + H_2O reflector on the side. Actually there may be a thorium blanket about 15 cm away from the surface of the 22- by 70-cm rectangle which reduces the reactivity by about 0.7% in $\Delta k/k$. This is rather an overestimate of the thorium effectiveness because for most reactor loadings the distance from the reactor interface to the thorium blanket will probably be more than 15 cm.

4.3.5 Other Reactivity Losses. Experimental setups around and in the reactor lattice will further reduce the reactivity of the machine. An additional 5% in $\Delta k/k$ was arbitrarily assigned to handle this. It is estimated that this margin in $\Delta k/k$ represents an absorber of total cross-section 330 cm^2 placed uniformly in a 2-kg reactor.* It may be pointed out that in the present ORNL reactor, the total poison cross-section which will take up the excess available for experiments, i.e., about 0.5%, is 4000 cm^2 if spread uniformly or 500 cm^2 if concentrated at the center.

4.3.6 Total Reactivity of Reactor. The overall minimum excess reactivity built into the reactor is summarized in Table 4.3.B.

TABLE 4.3.B

Minimum Reactivity Losses Which Must Be Allowed for in Reactor

SOURCE OF LOSS	$\Delta k/k$ (%)
Xe^{135} + Sm^{149}	9.6
Depletion + low-cross-section fission products	3.5
Temperature	0.8
Others	5.0
Total	18.9

*The critical experiments discussed in Appendix 3 indicate that $\Delta k/k$ for experiments and apparatus will be less than that assigned here.

From the curve of critical mass versus k in Fig. 4.3.D it may be estimated that about 2.6 kg is needed to ensure an excess $\Delta k/k$ of 18.9%.

Because of the thorium blanket (which reduces the reactivity by about 0.7% in $\Delta k/k$, depending on the disposition of the active lattices) and because of the holes in the reflector, the amount of U^{235} needed to give an excess reactivity of 18.9% is a little larger than 2.6 kg for a reactor built with an Al/H_2O volume ratio of 0.70.

The exact critical mass is not crucially important since the reactor is designed so that as much as 6 kg of U^{235} can be loaded by replacing all the removable beryllium. With this loading the excess reactivity is $\Delta k/k = 29\%$. It would, of course, be undesirable to use this large loading regularly since this would mean, for fixed total power, a reduction in flux. If the critical mass calculations are correct, then the average slow flux attainable in the machine will in fact be 2×10^{14} at 30 megawatts; if the critical masses turn out to be higher than calculated, then the flux at 30 megawatts will be reduced in proportion.

[redacted]

Dwg. No. 10901

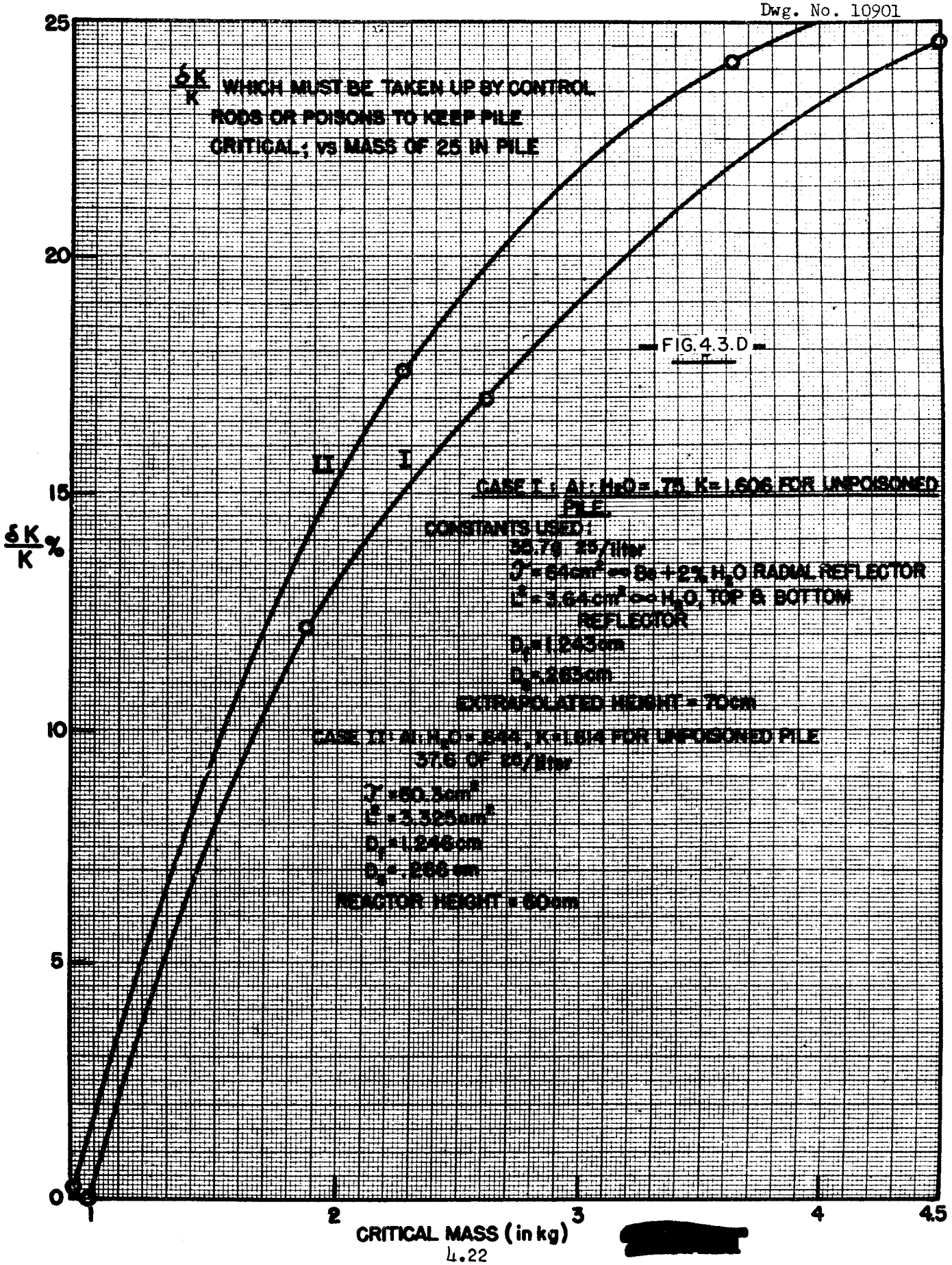

[redacted]

4.4 DYNAMICS OF THE REACTOR

A proper analysis of the time-dependent behavior of a reactor operating on thermal neutrons must take into account the important effects on its criticality, reactivity, and stability which arise from such factors as fission products of high thermal-neutron capture cross-section, depletion, temperature, average neutron lifetime in the reactor, flux level, and reactor period. As has been seen in the requirements placed on the reactor, considerable excess reactivity must be built into the active core before start-up. The control rods must keep the reactivity below the critical value before and during start-up.

Two start-ups must be considered separately, first for the case for the clean, cold reactor, and second for the case when the reactor has been shut down from a high level and must be started up again quickly. When an enriched reactor starts from a cold, clean state to a power level of 3×10^7 watts, as in the MTR, the range to be covered by control instruments is from $10^{-18} \times$ full power to unity $\times$ full power (in terms of total number of fissions per second, 3×10^7 watts requires about 10^{18} fissions/sec).

In order to bring the lower part of this range into the operating region of convenient instruments a neutron source (e.g., Po-Be) is always inserted in the reactor to produce about 10^7 neutrons/sec. With such a source in place in a cold, clean reactor, start-up time of half an hour has been selected as sufficiently slow for safety and not objectionably long for convenience. The rods therefore are withdrawn at an average rate of 0.01% $\Delta k/k$ per second, which is accomplished by withdrawing at the rate of 0.1% per second for ½ sec, followed by a waiting period of 4½ sec. This "intermittent" speed is equivalent to introducing step changes in reactivity at regular intervals, and the increasing transient periods become an indication of the approach to criticality.

If it is assumed that a "start-up accident"* occurs in which rods are withdrawn continuously at a rate equivalent to $\Delta k/k \approx 0.1\%$ per second, the neutron level will rise only a factor of 100 in several minutes. However, at the end of this time the reactor will be supercritical, on a rising period of approximately 10 sec, and in a few more seconds will have a period of approximately 1 sec. Under these conditions the reactor will have passed prompt

*See Chap. 5.

critical long before the level is reached at which the safety instruments are set to operate. If all controls have failed, the minimum period expected, pessimistically estimated at about 1/30 sec, must be countered by safeties capable of 30-msec response. In this event the power would momentarily rise to about three times "normal" overload power or about four times operating power. It has been demonstrated in the MTR Mock-Up that rods will actually begin to drop in about 0.015 sec.

In restarting the reactor after a short shutdown, the time available is limited by xenon growth; hence the rods must be withdrawn as quickly as possible. However, the considerations of the preceding paragraph indicate that the maximum tolerable rod withdrawal is 0.1% $\Delta k/k$ per second. This, then, has been fixed as the "high" rate of rod withdrawal and permits complete withdrawal of all rods in about 6 min

When the MTR is normally at full load, the excess reactivity may amount to 20% in k. All the controls will take up about 40% in k at most, so that a dead, cold reactor has a k of about 0.8 This imposes great caution in start-up, and the control arrangement as described in Chap. 5 makes it impossible to start the reactor or operate it without a source of sufficient strength.

The provision of a source has been conveniently brought about by utilizing an arrangement of antimony plus beryllium. ${}_{51}Sb^{124}$ is a γ-ray emitter of 0.03 Mev with a 60-day half-life; it is conveniently made from natural ${}_{51}Sb^{123}$ by neutron absorption. Such a source is therefore kept active in a going reactor. It has the advantages of cheapness and sufficiently long half-life to maintain high activity for several days after shutdown.

4.5 HEAT PRODUCTION, TRANSFER, AND REMOVAL

As has been previously indicated, the fuel assemblies and the beryllium reflector are water cooled. In the reflector the water acts primarily as a coolant, but in the active lattice it acts as both coolant and moderator. This means that the quantity of water (moderator) in the active lattice at any time must be determined by nuclear considerations, but the speed with which it passes through the lattice is determined by heat transfer requirements.

The high flux requirements of the MTR require a reactor with the smallest possible critical mass. This is accomplished by building the reactor with the optimum U^{235}/H ratio,[1,2] which in this case means choosing the appropriate U^{235}/H_2O ratio. With these nuclear requirements in mind, the amount of uranium per fuel plate was determined by the optimum amount of uranium in uranium-aluminum alloy, and the thickness of each plate was determined by the practicability of the picture frame construction and required rigidity of the plate structure (see Appendix 6). The U^{235}/H ratio was then fixed by the spacing between the plates.

The above considerations led to the present design of the MTR fuel assemblies with spacing of 0.117 in. between plates. Heat transfer calculations[3] then showed that satisfactory heat transfer could be obtained with a water velocity of approximately 30 ft/sec through these spaces. Once this figure was established, further calculations[4] and experiments (see Appendix 4) established the pressure differentials required and the resultant quantity of water through the reactor. By this means the necessary pressure drop across the fuel assemblies was found to be about 40 psi, which, because of parallel flow, is also the pressure drop across the beryllium reflector. It should be noted that this pressure produces a flow of approximately 20,000 gpm through the reactor and beryllium, resulting in a water temperature rise of only about 11°F for 30,000-kw operation.

The original calculations for heat production are reported in MonP-272. Since that time these figures have been experimentally checked in critical experiments (see Appendix 3) and in the Mock-Up (see Appendix 4). For convenience the initial results given in MonP-272 are restated in Sections 4.5.1 and 4.5.2, while the later figures based on experiment are given in Appendixes 3 and 4. A check on all these figures will, of course, be made in the early days of operation of the MTR.

4.5.1 Calculations of Heat Inside Active Lattice. The assembly plates will contain a concentration of U^{235} of about 20.4 mg/cm^2. At a power output of 10 kw per gram, which corresponds to a slow flux of about 2×10^{14}, the heat taken out of each side of an assembly plate is about 24 cal/cm^2/sec. With a flow velocity of 30 ft/sec in the reactor core and a plate separation of 0.117 in., the heat transfer coefficient, with no scale formation, should be about 0.9 cal/cm^2/sec/°C, or 6300 Btu/hr/ft^2/°F. The film temperature drop is therefore 27°C.

These are average figures. Along the mid-plane of the core, the flux is about 1.3 times the longitudinal average; at the core-reflector interface this can be increased by as much as another factor of 1.2 when the loading is in the form of a very thin slab. Finally, in the neighborhood immediately surrounding a thorium shim rod there is a further local heating of about 20%, which arises because of the rather large dead layer of H_2O-Al (13 mm) between active assembly and thorium. The hottest spot in the reactor may therefore have a power output which is $1.3 \times 1.2 \times 1.2 = 1.87$ times the average. Thus the maximum film drop could be as high as 50°C even without any scale formation. If the average power output is 10 kw per gram,* the reactor is loaded as a thin slab, and a thorium shim rod happens to be close to the core-reflector interface.

4.5.2 Calculations of Heat in Beryllium and in Foreign Materials Near Active Lattice. Outside the core, heat is produced primarily from absorption of γ rays. Some of these come from the reactor itself, and some arise from neutron capture in beryllium, in thorium, and in graphite.

The calculation of the heat distribution in the reflector was based on the neutron distribution for the very thin slab reactor without any thorium (Fig. 4.2.F) since in this case the heat load in the reflector is heaviest. The results are given in Fig. 4.5.A. To simplify the computation of the γ-ray absorption, the core and reflector were assumed to be infinite slabs; this leads to an overestimate of the heat load since the neutron flux was assumed to be uniform over the whole core and equal to 2×10^{14}.

The added heat flux per experimental hole is about $0.03A^2/R^2$ kw,** where A is the cross-sectional area of the hole, and R is the distance from the core surface to the face of the hole opposite the core surface, provided A is much smaller than R^2. For the 6-in. hole, $R \approx 40$ cm, the total heat flux is about 0.6 kw or 3.5 watts/cm^2. The pile γ-ray heat flux at 40 cm in the absence of a hole is 3.5 watts/cm^2; hence, the hole increases the load due to the γ-ray heat by a factor of 2, or the total heat flux increases from 4.6 watts/cm^2 (see Fig. 4.5.A) to $4.6 + 3.5 = 8.1$ watts/cm^2.

The greatest heat load outside the core occurs in the mid-plane of the beryllium reflector at the interface between beryllium and core. This maximum

*The specific power (average) for the reactor is 300 kw/liter.

**0.03 is the approximate average γ-ray heat flux at surface of lattice.

DWG. NO. 10905

[redacted]

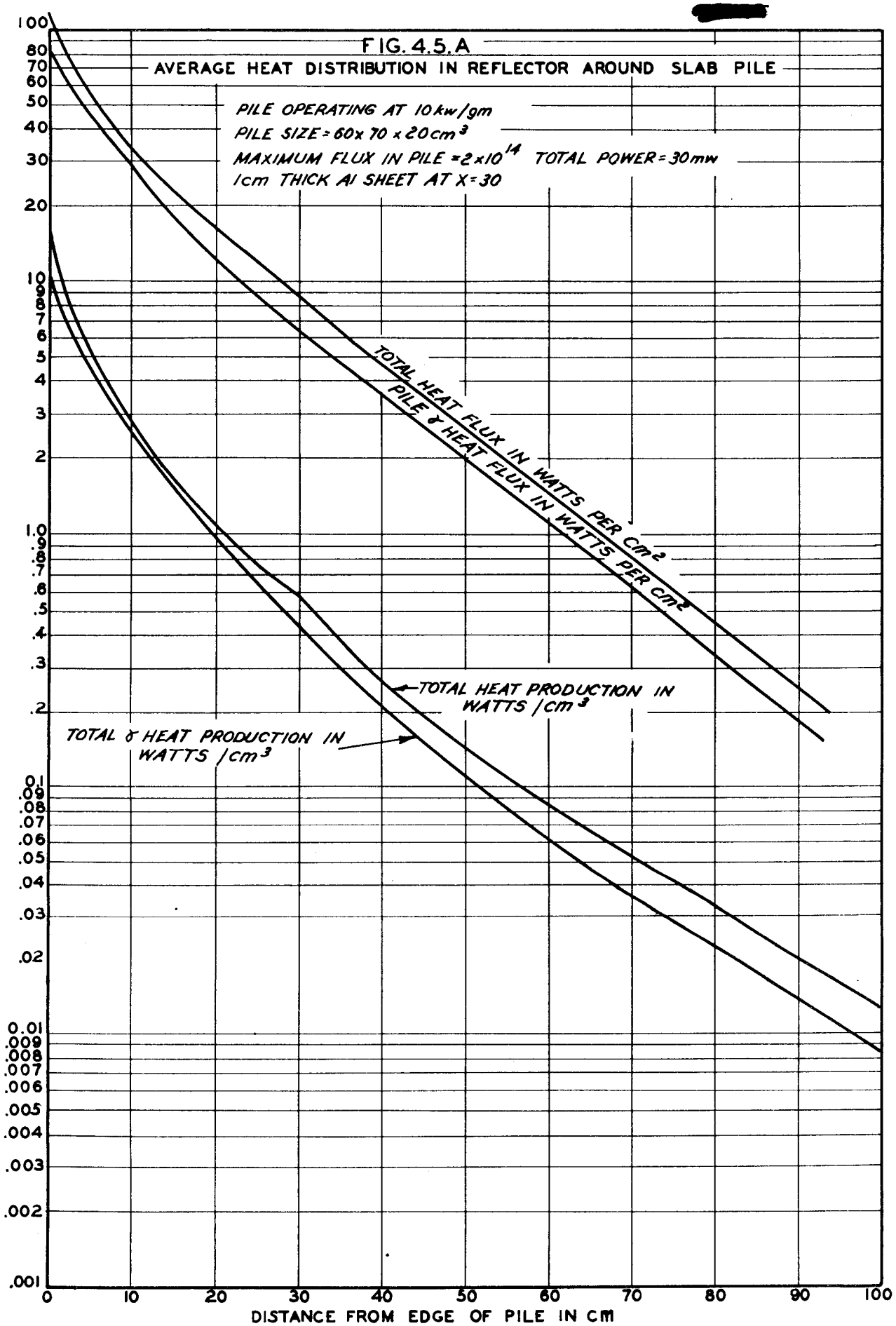

might be as much as 16 watts/cm^3 or 3.84 cal/cc/sec. If the beryllium is shaped like a slab, cooled on both front and back faces, the temperature rise in the center is

$$\Delta T = \frac{qx^2}{2k} = 4.8x^2$$

where q is the heat production (= 3.84 cal/cc/sec), x is the half-thickness of the slab, k is the thermal conductivity and is equal to 0.4 cal/deg/cm/sec. A temperature rise of 75°C, which is probably safe, allows the slabs to be 8 cm thick.

Foreign materials, such as control rods or experiments which are placed in the center of the core, will be heated even more strongly than the beryllium. The γ-ray heat production at the center of the reactor is about 5.85 cal/cc/sec; this is essentially the γ-ray heat absorbed in the reactor. Since the reactor has an average density of about 1.7 g/cc, an estimate of the heat production in a foreign body placed at the center of the reactor will be about 5.85/1.7 = 3.4 cal/g/sec. Thus in beryllium, density 1.85 g/cc, the heat load is 6.3 cal/cc/sec, while in thorium, density 11 g/cc, the heat load due to reactor γ's alone is 38 cal/cc/sec.

In addition to the reactor γ's, the U^{233} fission in the thorium creates a heat load which is not negligible. It is unwise to run the U^{233} concentration in the thorium beyond 0.1% because at this time about one-tenth of the captures in thorium lead to fission. The additional heat load in the thorium due to U^{233} fissions is about 22 cal/cc/sec. The total load in the thorium rods may therefore be as high as 60 cal/cc/sec.

4.5.3 Heating and Cooling of the Graphite Reflector. This subject is covered fully in a report[5] on the cooling of the graphite reflector. Heat production in the graphite is based on the curves given in MonP-272 and the data obtained in critical experiments (Appendixes 2 and 3) and is normalized for a slab reactor of the following characteristics:

Power (kw)	30,000
U^{235} in reactor (kg)	3.5 (23 assemblies + half of 4 shim rods)
Mev/fission	187
Fissions/sec	9.9×10^{17}
Average nv (thermal)	2.0×10^{14}
Specific power (kw/liter)	300

The results of these calculations are shown in Fig. 4.5.B. In this figure the curves are discontinuous owing to the pebble zone which is indicated between points *AA* and *CC* for slab and square loading, respectively.

The total heat to be removed from the pebble bed was estimated by dividing the bed into several zones and calculating the heat production from the curves in Fig. 4.5.B. By this method it was found that the total heat produced in the pebble bed is about 420 kw with the reactor operating at 45,000 kw.

The total heat to be removed from the permanent graphite was found by a method similar to that used in the pebble zone and amounts to about 330 kw with the reactor operating at 45,000 kw.

4.5.4 Heating and Cooling of the Thermal Shield. Heat production in the thermal shield has been calculated,[6,7] and these calculations show a total heat production of 47.5 kw in the thermal shield for operation at 30,000 kw. These figures were obtained by estimating the neutron fluxes and multiplying these fluxes by 60×10^{-14}, the heat production for a flux of 1 neutron/cm^2-sec at the surface of the steel. This figure assumes that reactor and reflector γ rays produce an amount of heat equal to that produced by capture γ rays in the steel.

The temperature produced in the steel by this heat production is highest in the bottom thermal shield and in the east side wall with slab loading. With the present design of the shield (see Section 2.5.1) and air flow of 25,000 cfm it is estimated that the maximum steel temperature in the bottom shield will not exceed the air temperature by more than 150°F at 60,000-kw operation. Furthermore, the maximum temperature of the steel next to the concrete will be less than 70°F above the air temperature.

Temperatures in the east side wall are high because of proximity to the active lattice (slab loading on east side). Present design calls for insulation between the graphite and the steel in the side walls to reduce heat conduction from the graphite into the steel.

4.5.5 Cooling Requirements at Reduced Power Levels and After Shutdown. The cooling requirements at reduced power levels have been calculated;[8] the results are plotted in Fig. 4.5.C.

[redacted]

Dwg. #8599

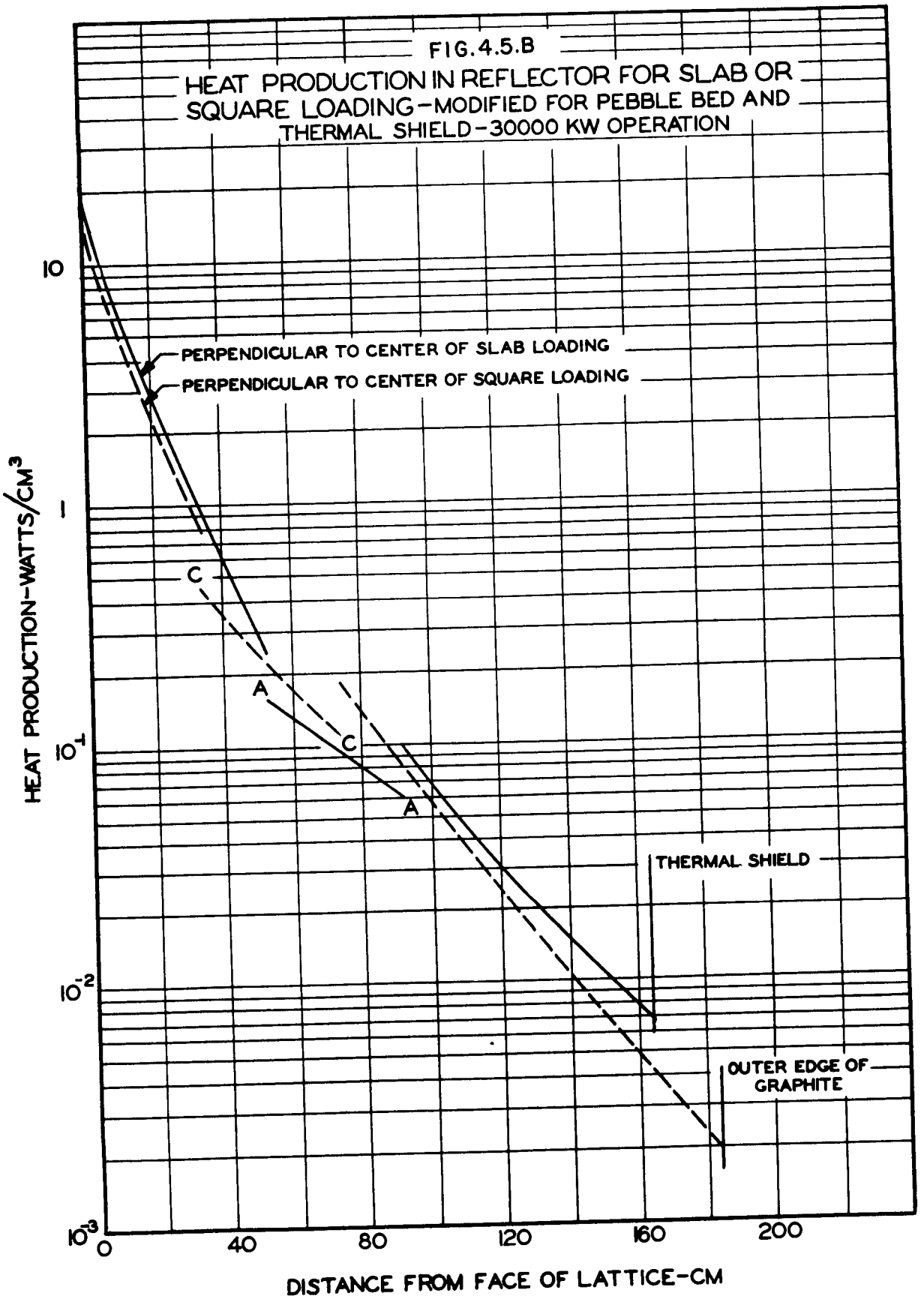

[redacted]

Drawing # 8733

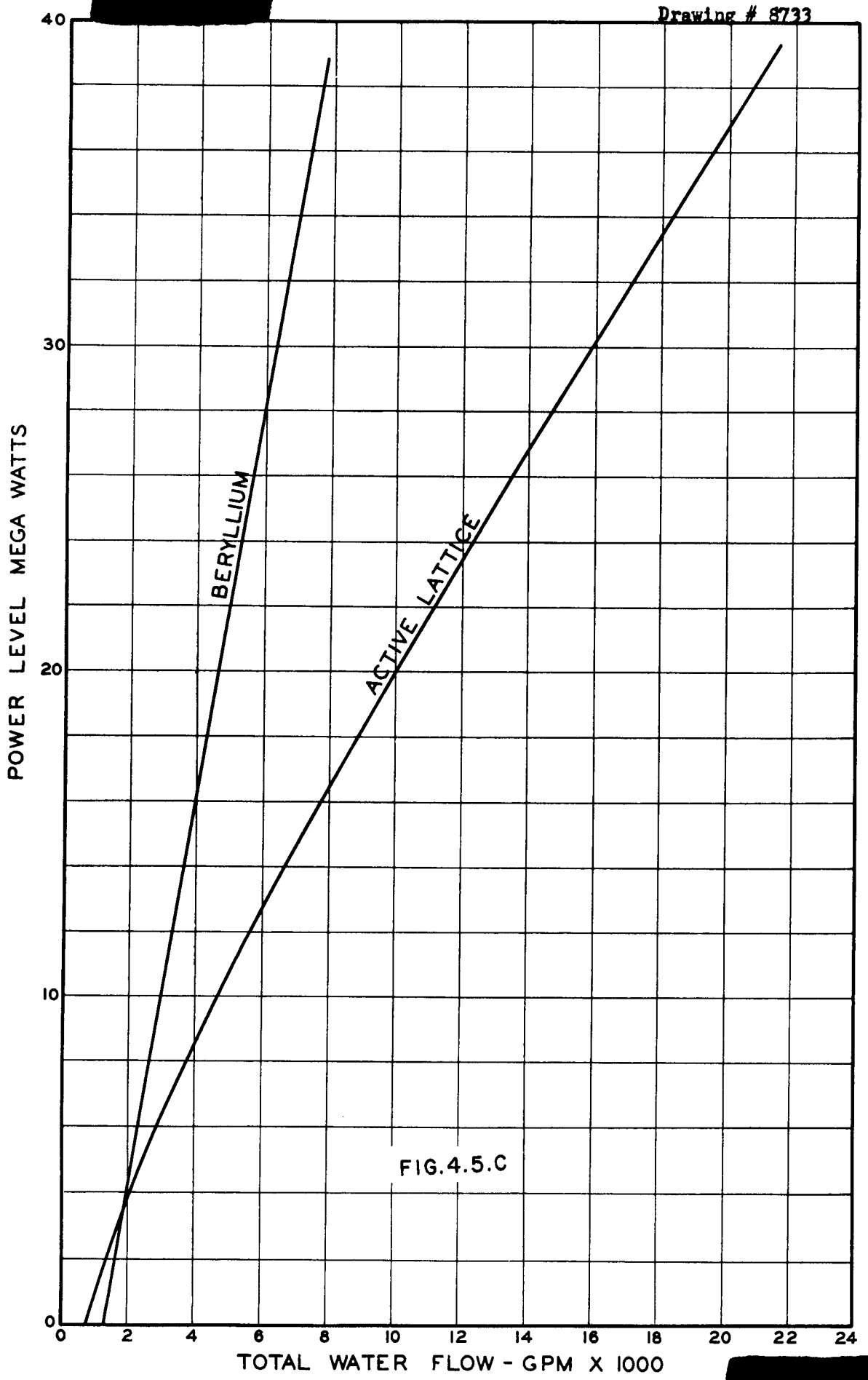

FIG. 4.5.C

[redacted]

The problem of cooling after shutdown has been extensively studied, and a full report has been written.[9] After shutdown the power level is given by the formula developed by Way and Wigner:[10,11]

$$P = BF\ [t^{-0.2} - (t + T)^{-0.2}] \qquad \text{Mev/sec}$$

where

F = fissions/sec-kw

t = seconds after shutdown

T = seconds of pile operation

During operation the power level is given by

$$P = 187F \qquad \text{Mev/sec}$$

so that the reduction factor is $A[t^{-0.2} - (t + T)^{-0.2}]$. Experimental and extrapolated values of the reduction factors given in Table 4.5.A show that A varies between 0.80 and 0.90 over a range of 360 sec to 4 days for a 20-day irradiation period.

Using the equation for decay given above, the heat generated in the tank after shutdown, assuming no losses from the tank, is given by:

$$H = \int_0^t 30{,}000(0.08)\ [t^{-0.2} - (t + T)^{-0.2}]\ dt$$

$$= 3{,}000\ [t^{0.8} - (t + T)^{0.8} + (T)^{0.8}] \qquad \text{kw-sec}$$

Using a 20-day irradiation, then, for t values up to a few hours,

$$H = 3{,}000\ t^{0.8}\ \text{kw-sec} \qquad = 2.42\ t^{0.8}\ \text{cal/cm}^2\text{/sec}$$

which gives the values listed in Table 4.5.B.

TABLE 4.5.A

Reduction Factors After Shutdown

COOLING TIME	$t^{-0.2}-(t+T)^{-0.2}$	10-DAY OPERATION			20-DAY OPERATION			40-DAY OPERATION		
		(kw/g)	F	A	(kw/g)	F	A	(kw/g)	F	A
6 min	0.252	2.00	2×10^{-2}	0.0795	1	2×10^{-2}	0.0795	0.52	2.08×10^{-2}	0.0825
12	0.213	1.65	1.65×10^{-2}	0.0775	0.86	1.72×10^{-2}	0.0806	0.445	1.78×10^{-2}	0.0835
18	0.191	1.49	1.49×10^{-2}	0.0780	0.78	1.56×10^{-2}	0.0815	0.405	1.62×10^{-2}	0.0848
24	0.177	1.38	1.38×10^{-2}	0.078	0.73	1.46×10^{-2}	0.0824	0.378	1.51×10^{-2}	0.0853
30	0.167	1.32	1.32×10^{-2}	0.079	0.70	1.38×10^{-2}	0.0826	0.360	1.44×10^{-2}	0.0863
36	0.159	1.25	1.25×10^{-2}	0.0786	0.67	1.32×10^{-2}	0.0830	0.345	1.38×10^{-2}	0.0868
42	0.153	1.20	1.20×10^{-2}	0.0785	0.64	1.28×10^{-2}	0.0835	0.340	1.36×10^{-2}	0.0889
48	0.147	1.16	1.16×10^{-2}	0.0789	0.62	1.24×10^{-2}	0.0842	0.330	1.32×10^{-2}	0.0898
54	0.142	1.12	1.12×10^{-2}	0.0789	0.60	1.24×10^{-2}	0.0845	0.315	1.26×10^{-2}	0.0888
1 hr	0.138	1.09	1.09×10^{-2}	0.0790	0.58	1.16×10^{-2}	0.0840	0.305	1.22×10^{-2}	0.0885
2	0.113	0.89	8.9×10^{-3}	0.0787	0.48	9.6×10^{-3}	0.0850	0.260	1.04×10^{-2}	0.092
5	0.085	0.67	6.7×10^{-3}	0.0788	0.37	7.4×10^{-3}	0.0871	0.200	8×10^{-3}	0.0941
10	0.066	0.52	5.2×10^{-3}	0.0782	0.29	5.8×10^{-3}	0.0879	0.163	6.5×10^{-3}	0.0985
1 day	0.046	0.36	3.6×10^{-3}	0.0783	0.21	4.2×10^{-3}	0.0913	0.122	4.88×10^{-3}	0.106
2	0.0345	0.255	2.5×10^{-3}	0.0738	0.155	3.1×10^{-3}	0.0898	0.092	3.68×10^{-3}	
4	0.0232	0.164	1.64×10^{-3}	0.0707	0.105	2.1×10^{-3}	0.0905	0.066	2.6×10^{-3}	
10	0.0126	0.075	7.5×10^{-4}	0.0555	0.054	1.08×10^{-3}	0.0855	0.035	1.42×10^{-3}	
20	0.0075	0.035	3.5×10^{-4}	0.0466	0.0270	5.4×10^{-4}	0.072	0.019	7.6×10^{-4}	
50	0.0032	0.0097	9.7×10^{-5}	0.0303	0.0083	1.66×10^{-4}	0.052	0.0065	2.6×10^{-4}	
100	0.0012	0.00305	3.05×10^{-5}	0.0254	0.0027	5.4×10^{-5}	0.045	0.00235	9.4×10^{-5}	

TABLE 4.5.B

Cumulative Heat After Shutdown

t	$t^{0.8}$	(kw-sec)	(Btu)	(cal)
1 sec	1	3,000	2,840	715,000
2	1.74	5,220	4,950	1,248,000
5	3.62	10,900	10,340	2,600,000
10	6.3	18,900	17,900	4,510,000
30	15.2	45,600	43,300	10,920,000
60	26.5	79,500	75,400	19×10^6
5 min	96	288,000	273,000	68.7×10^6
10	106	498,000	473,000	119.2×10^6
30	400	1,200,000	1,140,000	287×10^6
1 hr	700	2,100,000	1,990,000	501×10^6
2	1,220	3,670,000	3,480,000	876×10^6

Using the equations on page 4.32 the fall-off of the heat rates and the corresponding water requirements are given in Table 4.5.C.

It will be noted that the water flow drop-off must be governed by the beryllium requirements since the heat source in the beryllium does not decrease as rapidly as in the lattice.

TABLE 4.5.C

Fall-off of Heat Rates and Water Rates

TIME	REACTOR LATTICE				BERYLLIUM		REACTOR LATTICE, Be CONTROLLING	
	(kw)	(cal/cm^2-sec)	(gpm)	(ft/sec)	(kw)	(gpm)	(gpm)	(ft/sec)
0 sec	1,950	1 525	850	1.95	350	518	3 570	8.2
1	1 840	1 43			330			
5	1,300	1.01			234			
10	1 120	0.87	488	1.12	201	298	2 050	4.7
30	877	0.68			158			
1 min	715	0.55			128			
2	606	0.47			109			
6	490	0.38			88			
12	416	0.32			74			
30	326	0.25			58			
1 hr	269	0.21	118	0.27	48	72	498	1.13
2	220	0.17			39			
10	129	0.10	56	0.09	23	34	236	0.54
1 day	90	0.07			16			
2	67	0.05			12			
4	45	0.03	20	0.05	8	12	82	0.19

4.6 SHIELDING SUMMARY

The first approach to the design of the biological shield of the Materials Testing Reactor was the comparison of the neutron and γ-ray fluxes incident on the graphite reflector of this reactor with similar fluxes in the Clinton and Hanford reactors.[12] Since experience at Oak Ridge and Hanford had demonstrated the adequacy of the shields on existing reactors, these were used to establish the required thickness of the MTR shield. On this basis, the original design consisted of an 8-in. iron thermal shield surrounded by 9 ft of ordinary concrete. This was estimated to give a γ-ray attenuation of a factor of about 10^{10} and a neutron attenuation of about 10^{12}. In addition, the equivalent shielding above the active lattice was set at 17½ ft of water plus 21 in. of iron.

In order to compensate for voids in the concrete shield due to air ducts, water lines, service facilities, and experimental holes, it was originally proposed to substitute iron slabs or heavy aggregate concrete for the ordinary concrete where necessary. As the detailed design of the shield progressed, however, the required amount of supplementary shielding increased to the point where the design became extremely complicated. For this reason it was decided to use barytes ore, which is substantially heavier than the aggregate used in ordinary concrete, as the aggregate for the entire concrete portion of the shield in order to provide adequate shielding without additional iron slabs and at the same time maintain the given external dimensions of the pile structure. Although the use of barytes aggregate concrete with a density of 3.5 g/cc results in a considerable over-design of certain portions of the shield, the flexibility and simplicity of a homogeneous structure was considered preferable to the complicated design involving iron slabs, iron aggregate, and ordinary concrete.

The fundamental conceptual design of the thermal and biological shield having been established, a comprehensive survey of the adequacy of this shield was carried out using layouts of the specific arrangement of the experimental holes and service facilities as made by the MTR design group. Both theoretical and empirical considerations of shielding were used to estimate neutron and γ-ray intensities throughout the shield. In general, the proposed design was found to be satisfactory except in a few places such as in

the vicinity of the exit water lines. These few places in the shield that were found to be slightly inadequate with the barytes aggregate concrete are protected with additional iron.

The following discussion is divided into three parts. The first part reviews fundamental principles of shielding theory and establishes the basis for the calculations. The second part summarizes the calculations and results pertaining to the main concrete structure, and the final part discusses numerous supplementary shielding problems associated with the design of the reactor structure.

4.6.1 Fundamental Concepts. *Design Tolerances.* In the first discussions of the reactor shield the designers assumed that when γ-ray radiation predominated, the radiation intensity should be 0.01 r per 8 hr. Later the neutron tolerances were established as one-tenth the values suggested by the September, 1949 Chalk River Conference. The permissible neutron dose measured in reps* is less than the γ-ray tolerance in roentgens because of the greater damage ascribed to neutrons. (Complete coverage of this subject is given in Evans'[13] report to the National Research Council.)

For use in calculations it is desirable to express these limiting intensities as fluxes. The flux values chosen are:

6- to 10-Mev neutrons	5 neutrons/cm^2-sec, equivalent to 0.1 mrep/hr
6-Mev γ rays	100 photons/cm^2-sec, equivalent to 1.2 mr/hr

These represent the allowed radiation leakage where one of the components is completely dominant. When both neutrons and γ rays are present, it is necessary to consider the combined effects.

The conservative nature of the choices for the limiting tolerable fluxes is revealed by Figs. 4.6.A and B, which indicate that the choices correspond to very high-energy radiation. Neutrons and γ rays in this energy range comprise only a small fraction of the total radiation to be attenuated.

Attenuation of Penetrating Radiation. The barytes concrete prescribed as the main structural material for the MTR biological shield is described in a report[14] concerned principally with the composition of the concrete together with its structural and handling characteristics.

*rep = roentgen equivalent, physical.

DWG. #10521
NOT CLASSIFIED

1 rep = 93 ergs/gm absorbed in tissue
$E_{absorbed} = 1.6 \times 10^6\ \mu(E)\ \phi(E)$ ergs/sec
$\mu(E)$ = Tissue Absorption Cross-Section Fig. A.7.B. -A.7.D.
$\phi(E)$ = γ-Ray Energy Flux ~ Mev/cm^2/sec

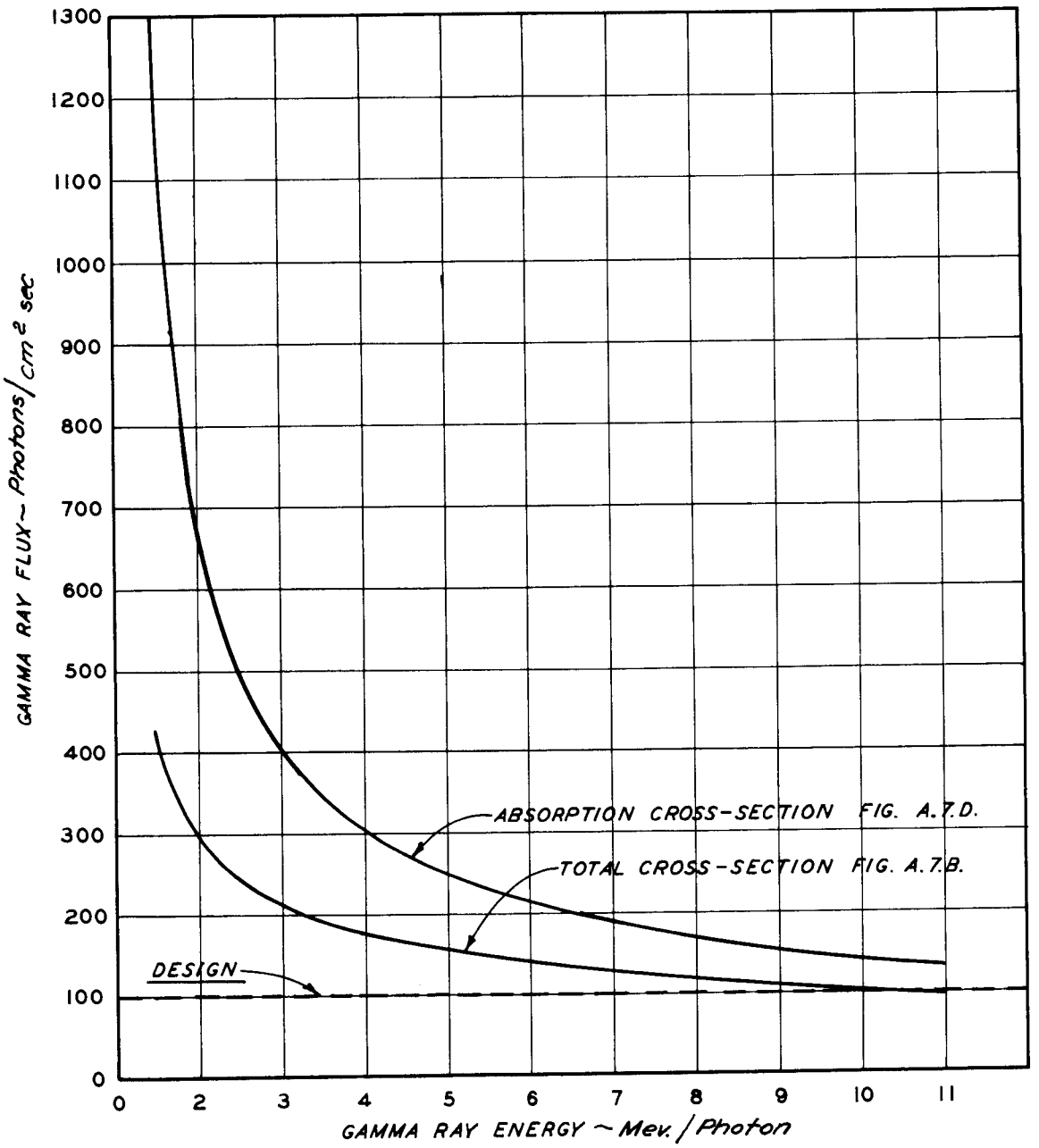

FIG 4.6.A.

PHOTON FLUX AS FUNCTION OF ENERGY FOR DOSE RATE = 0.01 rep/8hr

DWG. #10520
NOT CLASSIFIED

BASIC:
TOLERANCE = 0.3 rep FOR 40 HR WEEK
NEUTRON RELATIVE BIOLOGICAL EFFECTIVENESS = 10
DOSE CALCULATED BY BURNETT AS PER AECD-2173
WITH 1 REP = 95 ERGS PER GRAM TISSUE

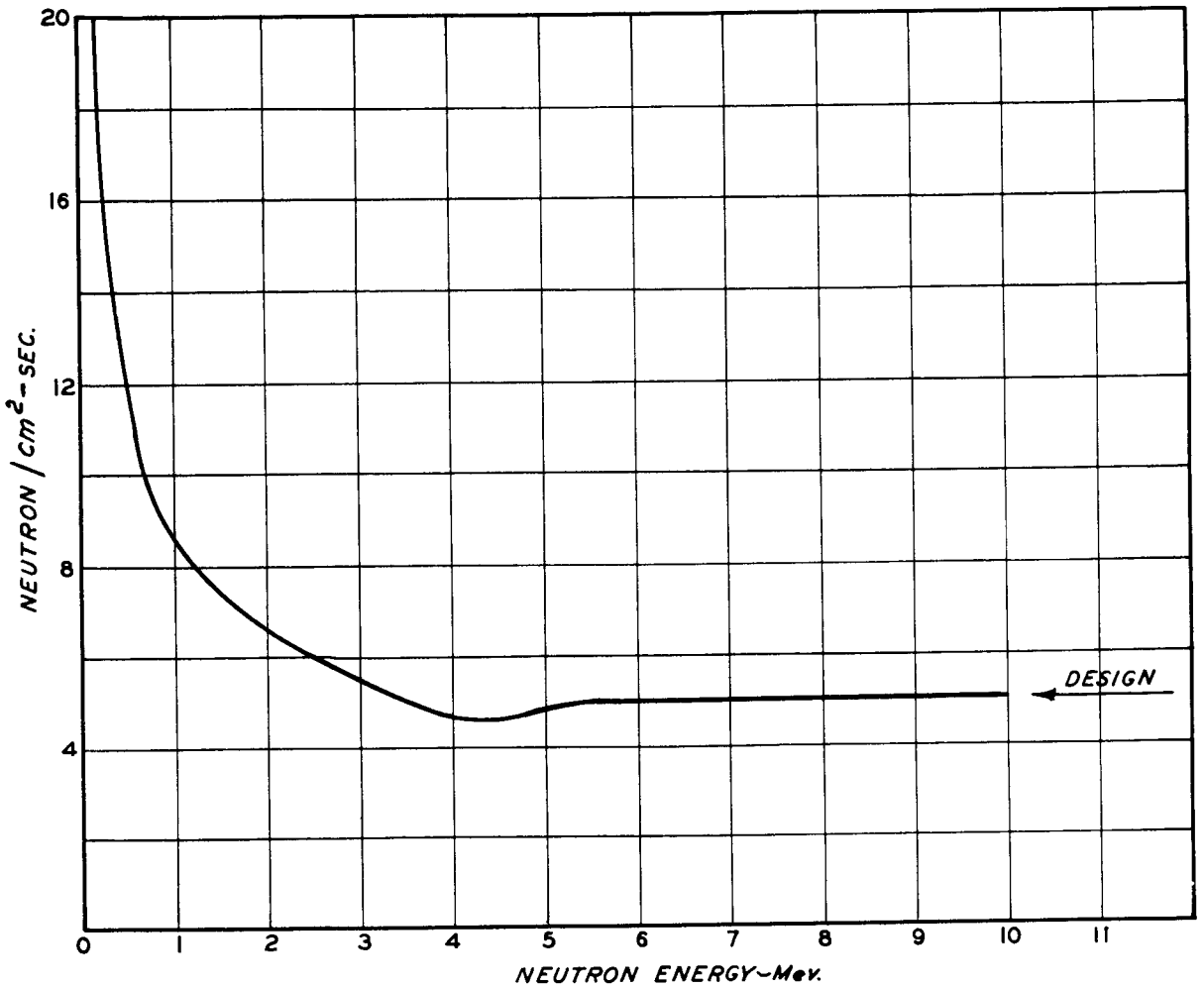

FIG. 4.6.B.
FAST NEUTRON FLUX FOR ONE-TENTH TOLERANCE DOSE

While some properties of barytes concrete have been determined experimentally, its radiation attenuation characteristics have not been investigated extensively. γ-ray attenuation experiments[15,16] using a 6-curie radiocobalt source give results which indicate that the γ-ray attenuation as compared with ordinary concrete varies as the ratio of the densities. The only neutron attenuation data available consist of some measurements in the shield of the British "GLEEP" reactor, which employs a barytes concrete biological shield following a 6-in. iron thermal shield. The available data are discussed in the section on neutron characteristics of barytes concrete.

In the absence of more experimental results it was necessary to estimate the attenuation characteristics of barytes concrete. The procedure used for estimating the neutron relaxation length amounts to an extrapolation of the observations on neutron attenuation in ordinary concrete.

1. Neutron Attenuation. (*a*) Estimate of Neutron Relaxation Length in Barytes Concrete. From experience it is found that a fairly reliable estimate of the neutron relaxation length for a material may be obtained by comparing its total macroscopic cross-section with that of a similar material, e.g., concrete of somewhat similar composition, whose asymptotic relaxation length is known. The Σ_t at an energy of 2 to 8 Mev for the "known" material is taken to be the reciprocal of the observed relaxation length. In order to make these quantities equivalent, it is necessary to assign suitable values of σ_t to one or more dominant constituents of the system. The Σ_t values so determined are then used to compute the Σ_t of the "unknown" material and its relaxation length is taken to be Σ_t^{-1}.

In this instance, inspection of Table 4.6.A reveals that oxygen is atomically predominant in both barytes and ordinary concrete. Therefore adjustment of σ_t for oxygen is indicated. The calculations have been carried out for 5 Mev (Table 4.6.A) and for 1 to 2 Mev (Table 4.6.B), with the former being considered more meaningful. Much of Table 4.6.B has been extracted from a previous report.[17]

The composition of the barytes concrete may be taken as:

Portland cement	517 lb/cu yd
Aggregate	5060
Water	316

TABLE 4.6.A

Total Cross-sections of Portland and Barytes Concretes at 5 Mev

ELEMENT	PORTLAND CONCRETE			BARYTES CONCRETE			
		CURED		AS MIXED		CURED	
	σ_t (barns)	M (milligram - atoms per cc)	$M\sigma_t$ [(barns) x (mg - atoms)/cc]	M (milligram - atoms per cc)	$M\sigma_t$ [(barns) x (mg - atoms)/cc]	M (milligram - atoms per cc)	$M\sigma_t$ [(barns) x (mg - atoms)/cc]
Fe	2.8	0.13	0.36	0.11	0.31	0.11	0.31
H	1.5	4.8	7.2	20.6	31.9	5.17	7.75
O	1.3*	71.8	93.5	71.2	92.6	63.5	82.5
Mg	2.0	0.2	0.4	0.2	0.4	0.2	0.4
Ca	2.0	14.5	29.0	3.4	8.85	3.4	8.85
Si	2.3	1.56	3.6	4.1	9.44	4.1	9.44
Al	2.4	0.44	1.5	0.4	0.96	0.4	0.96
S	2.5	0.06	0.15	12.0	30.0	12.0	30.0
C	1.2	10.8	13.0				
Ba	5.0**			11.9	59.6	11.9	59.6
	Total:		148.7		234.0		199.8
		Σ_t	(0.1487 x 0.602) = 0.0895 cm^{-1}		0.141 cm^{-1}		0.120 cm^{-1}
		Σ_t^{-1}	11.1 cm		7.1 cm		8.2 cm

*Chosen to make Σ_t^{-1} for ordinary concrete be approximately 11 cm. The oxygen cross-section has a minimum at around 5 Mev extending to about this value (ORNL-417).

**No experimental values available. Estimates from formulas in ORNL-433 give σ_t around 5.3 barns at 5 Mev.

TABLE 4.6.B

Total Cross-sections of Ordinary and Barytes Concretes in 1- to 2-Mev Range

ELEMENT	PORTLAND CONCRETE			BARYTES CONCRETE			
		CURED		AS MIXED		CURED	
	σ_t (barns)	M (milligram-atoms per cc)	$M\sigma_t$ [(barns) x (mg-atoms)/cc]	M (milligram-atoms per cc)	$M\sigma_t$ [(barns) x (mg-atoms)/cc]	M (milligram-atoms per cc)	$M\sigma_t$ [(barns) x (mg-atoms)/cc]
Fe	2.8	0.13	0.36	0.11	0.31	0.11	0.31
H	2.5	4.76	11.9	20.6	51.5	5.17	12.9
O	1.2*	71.8	86.2	71.2	85.4	63.5	76.4
Mg	2.2	0.2	0.44	0.2	0.44	0.2	0.44
Ca	2.0	14.5	29.0	3.4	6.8	3.4	6.8
Si	2.8	1.56	4.37	4.1	11.5	4.1	11.5
Al	2.5	0.44	1.1	0.40	1.0	0.40	1.0
S	2.5	0.06	0.15	12.0	30.0	12.0	30.0
C	1.6	10.8	17.3				
Ba	5.0**			11.9	59.5	11.9	59.5
	Total		150.8		246.5		198.9
		Σ_t	$(150.8 \times 10^{-3})(0.602) = 0.0908\ cm^{-1}$		$0.148\ cm^{-1}$		$0.210\ cm^{-1}$
		Σ_t^{-1}	11 cm		6.8 cm		8.3 cm

*This value of σ_t, chosen to make Σ_t^{-1} = 11 cm for ordinary concrete, happens to coincide with a minimum in the oxygen cross-section at about 1.4 Mev (ORNL-417).

**The assignment of σ_t = 5 barns for Ba is a conservative (i.e., low) estimate, more in line with reliable experimental work on other elements. The only known experimental values for Ba are from 6 to 7 barns at energies of 2 to 3 Mev [7] (cited in ORNL-433). The formulas of ORNL-433 give estimates of σ_t = 6.4 barns and 5.8 barns at 1 and 2 Mev, respectively.

where the aggregate is assumed to be 94% $BaSO_4$ and 6% SiO_2 by weight (SiO_2 is the mineral most commonly associated with $BaSO_4$ in barytes ore). A "cured" cement contains the same amounts of cement and aggregate but has the water reduced to 78 lb/cu yd, which is the amount required to hydrate the cement. The Σ_t^{-1} values of 7.1 and 8.2 cm, respectively, given in Table 4.6.A, indicate the range in which the observed relaxation lengths may be expected to fall. It is of interest to note that the maximum Σ_t^{-1} at 1 to 2 Mev (Table 4.6.B) is 8.3 cm.

The measurements of neutron attenuation in barytes concrete mentioned previously were originally transmitted in a letter from the U.K. Scientific Mission to the U.S. Atomic Energy Commission.[18] The barytes concrete for the biological shield of GLEEP was of a slightly different "recipe" from the ORNL mix but yielded a material of density 3.5 g/cc. The experimental results as transmitted are presented in Fig. 4.6.C. It is of interest to note that the curves *A* and *B* for neutron measurements in barytes concrete exhibit relaxation lengths of 7.2 and 8.1 cm, respectively.

In view of the calculation which was outlined, a neutron relaxation length of 8.2 cm was used in the analysis of the shield performance.

(*b*) The Effect of Iron on Fast Neutrons. The introduction of a layer of iron into a neutron shield principally results in the attenuation of neutrons above 1 Mev by inelastic scattering to lower energies. As a result of this process, the neutron spectrum is shifted toward lower energy, and the neutrons emerging from the iron can be rapidly attenuated by water, concrete, or some other good shielding material for low-energy neutrons.

These effects are illustrated in the sketch on p. 4.46 which is based on some ORNL experiments.[19] Fission neutrons enter the iron from the left. The observed relaxation length of about 9 cm in the iron is probably due to slowing down and absorption of neutrons in the low-energy part of the spectrum. The neutrons which emerge from the iron are predominantly grouped near the "window" in the iron cross-section which occurs around 1 Mev.

[redacted]

Drawing # 9647

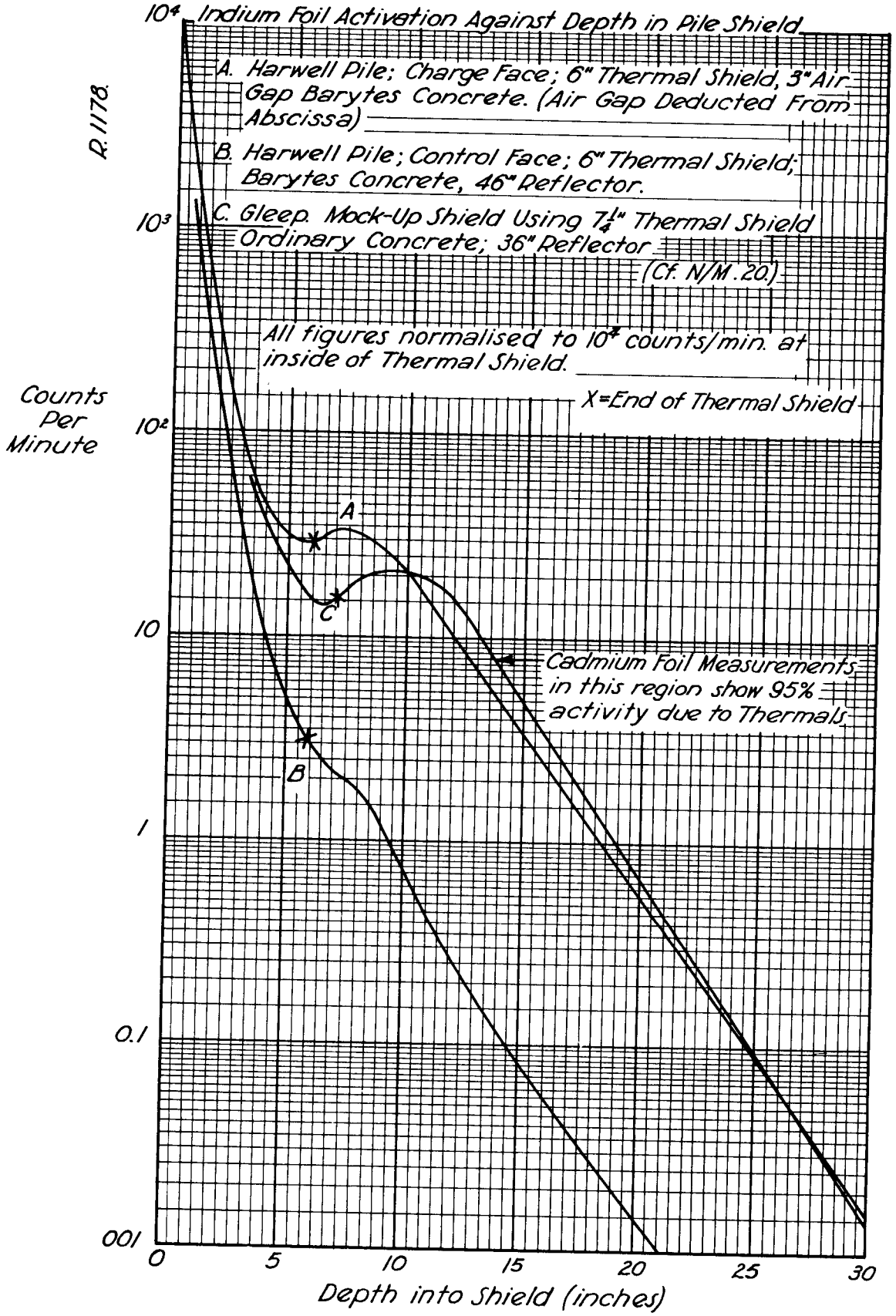

FIG. 4.6.C.

[redacted]

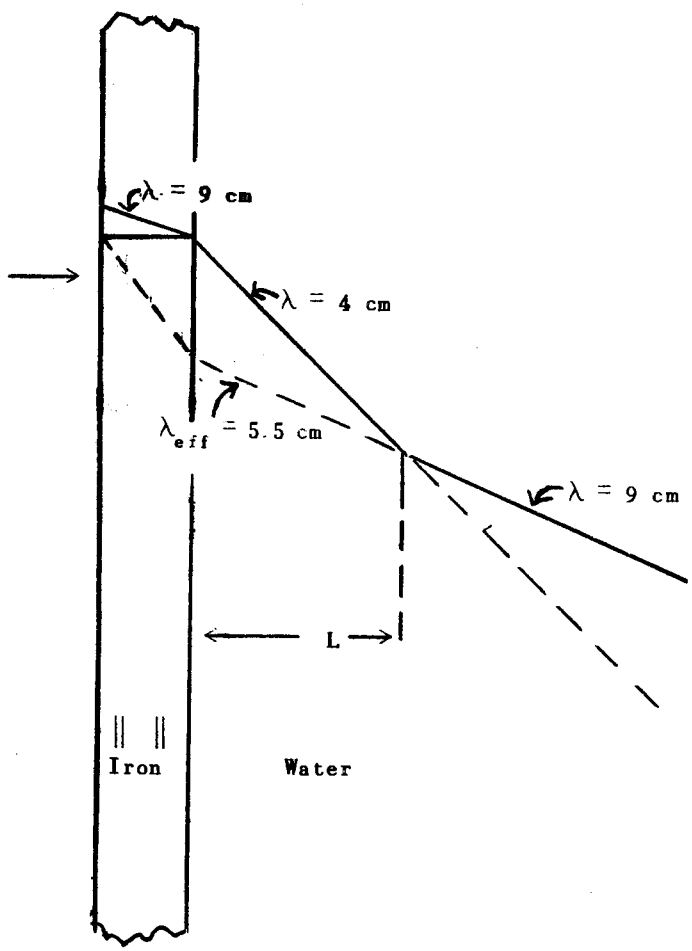

The observed 4-cm relaxation length reflects the rapid attenuation of these neutrons. Finally, the 9-cm attenuation length in H_2O, characteristic of the most penetrating part of the incident spectrum, is observed. The distance L at which this occurs increases with the thickness of the iron layer. In these experiments, it appears to be about 70 cm for iron 7 to 10 in. thick. In barytes concrete L will be roughly the same.

2. Gamma-Ray Attenuation and Absorption. The attenuation of gamma radiation follows an approximately exponential law,

$$\phi_E \approx \phi_0 B e^{-b} \tag{1}$$

where B is the so-called "build-up factor"* and b is the thickness of the shield measured in relaxation lengths. ϕ_E is the energy flux of radiation measured conveniently as Mev/cm^2-sec. The exact form of the equation depends on the geometry of the particular problem.

(*a*) Absorption Coefficients. To calculate b in Eq. (1), we write

$$b = \mu_1 r_1 + \mu_2 r_2 + \mu_3 r_3 + \ldots \tag{1a}$$

*The "build-up" factor pertains to the amount of radiation which penetrates a shield as compared with the amount predicted on the basis of simple exponential attenuation. For γ rays this exponential attenuation employs total cross-sections (see Appendix 7) which includes scattering in addition to energy absorption. The γ radiation emerging from a thick shield contains a scattered component many times greater than the component which penetrates the shield directly. The factor describing this excess for a given system is the B value.

where r_1, r_2, r_3 are the various thicknesses, in centimeters, of shield material measured along a line from the gamma source to the observer. μ_1, μ_2, μ_3 are the γ-ray absorption coefficients, in cm^{-1}, of the various shield materials. The values of μ for various elements are given in Figs. A7 and B.

The γ rays to be attenuated by a reactor shield are almost entirely of energy 8 Mev or lower. Very frequently the exact energy of the radiation is not known. For example, suppose that it is desired to attenuate 8-Mev γ's with water followed by lead. A large fraction of the γ rays is reduced in energy by scattering in the water. After the radiation penetrates the water, most of the γ rays may have energies in the range of 3 to 4 Mev, which corresponds to the minimum in the absorption coefficient of lead. Experience has shown that it is not unduly pessimistic in most cases to assume the minimum value of the absorption coefficient for all calculations.

(*b*) Build-up Factor. The values of B are determined usually by theoretical considerations of scattering of γ-ray radiation in the shield. Unfortunately there are uncertainties in the theoretical treatments and no consistent equations or values of B are available at present. It is important to note, however, that the exponential e^{-b} is the dominating factor in the attenuation equation. For example, for a 20-in. lead shield and 3-Mev γ rays, $e^{-b} \approx 10^{-10}$. Under these conditions $B \approx 10$, so that $\phi_E \approx \phi_0 10^{-9}$. If 10^{-10} attenuation is required, it is necessary only to increase the shield thickness to 22 in. In view of the slow variation of ϕ_E with the value of B, the designer should survey the various theoretical values of B and select one which appears to result in a safe shield design. A very simple approximation which is always conservative is to assume $B = b$; i.e., the value of the build-up is numerically equal to the number of relaxation lengths. This approximation was employed in the design of the concrete shield.

(*c*) γ-Ray Characteristics of Barytes Concrete. Although the γ-ray attenuation properties of barytes concrete have not been the subject of extensive experimentation, it is expected that the extrapolation of the data for ordinary concrete may be done with confidence. The usual design value for the asymptotic γ-ray relaxation length in ordinary concrete is 15 cm.[20] The barytes concrete prescribed for the shield has a density of 3.5 g/cc. The relaxation length used in the shield analysis has been extrapolated from the accepted value for ordinary concrete simply by postulating that the relaxation length varies inversely as the mass density. On this basis, the design relaxation length for γ rays in barytes concrete is 10 cm.

4.6.2 Concrete Shield Design. The general configuration of the biological shield was laid out on the basis of above cited (Fig. 4.6.1) tolerance limits. However, it was necessary to analyze the resulting shield to be sure that the leakage radiation had been reduced to at least design tolerance. In this analysis it was first attempted to determine whether or not the specified overall thickness of shielding was adequate. Secondly, a number of specific locations in the structure were studied where it was apparent that the shield effectiveness had been impaired by the detail design requirements. This section is concerned with the problem of the overall shield analysis.

Attenuation of Radiations. 1. Primary γ-Ray Attenuation. In checking a shield it is necessary to treat separately the γ rays and the neutrons which are incident on the inner face of the concrete. The disposition of the γ-ray problem was accomplished in the following manner:

The heat production in the thermal shield due to (1) the absorption of capture γ rays formed in the iron and in the graphite, and (2) the absorption of γ rays from the core has been reported in detail.[21,22] These reports give a value of 6.7×10^{-16} watts/cc produced at the outer face of the iron per unit thermal neutron flux at the inner face. It is estimated that less than half of this is due to γ rays from the core.

Since $\mu = 0.235\ \text{cm}^{-1}$ for 8-Mev γ rays in iron (the minimum value according to ORNL-421), the γ-ray flux at the outer face of the thermal shield is

$$\phi_E(0) = \frac{\text{nv} \times 6.7 \times 10^{-16}}{1.6 \times 10^{-13}} \times \frac{1}{0.235} \qquad (2)$$

or

$$\phi_E(0) = 0.018\ \text{nv} \qquad \text{Mev/cm}^2\text{-sec}$$

This states that at any point on the outside of the thermal shield the γ-ray energy flux is just 0.018 times the neutron flux at the corresponding point on the inside face of the thermal shield. An examination of the calculations shows that the variation of the neutron flux in the immediate vicinity of the point of interest has a negligible effect on the value of the γ-ray flux.

Assuming that the emergent γ rays have energies between 3 and 8 Mev, the upper limit for the emergent γ-ray flux is

$$\phi(0) = 0.006 \text{ nv} \qquad \gamma \text{ rays/cm}^2\text{-sec} \tag{2a}$$

A face of the iron thermal shield may be considered to be a slab surface with a uniform volume source of γ rays of strength Q_v γ rays/cc-sec. The resultant γ-ray energy flux in the concrete is described by the expression[23]

$$\phi_E = B\frac{Q_v E}{2\mu_s}\left[F_1(b_1) - F_1(b_3)\right] \qquad \text{Mev/cm}^2\text{-sec} \tag{3}$$

where

b_1 = concrete thickness in relaxation lengths.

b_3 = b_1 + thickness of iron in relaxation lengths.

The iron is sufficiently thick that the second F_1 term is negligible. At the steel concrete interface $b_1 = 0$, $F_1(0) = 1$, $B = 1$, and

$$\phi_E(0) = \frac{Q_v E}{2\mu_s} \qquad \text{Mev/cm}^2\text{-sec}$$

Hence (dropping the subscript on b_1),

$$\phi_E = B\phi_E(0)F_1(b) \qquad \text{Mev/cm}^2\text{-sec}$$

When the number of relaxation lengths measured through the shield is large,

$$F_1(b) \approx \frac{e^{-b}}{b}$$

Furthermore, as noted previously, we assume that $B \approx b$.

Thus, in general, for a thick shield,

$$\phi_E \approx \phi_E(0)\ e^{-b} \qquad \text{Mev/cm}^2\text{-sec} \tag{4}$$

or

$$\phi \approx \phi(0)\ e^{-b} \qquad \gamma \text{ rays/cm}^2\text{-sec} \tag{4a}$$

The application of the foregoing methods to the detailed analysis of the shield is a straightforward matter if conservative values for the incident neutron and γ-ray fluxes can be chosen. For γ rays the analysis was based on thermal neutron flux maps.[21,22] The shield was checked at a large number of points by the method described. For convenience, a table of representative attenuations is included at the end of this section. It is to be noted that the calculated fluxes are overestimates as compared with the experiments performed on the Mock-Up.[24]

Previously it was shown [Eq. (2a)] that

$$\phi(0) = 0.006 \text{ nv}$$

Hence, the value of the γ-ray energy flux at the outside surface of the concrete is

$$\phi = 0.006 \text{ nv } e^{-b} \qquad \gamma \text{ rays/cm}^2\text{-sec} \tag{5}$$

This formula provided the basis for checking the shield. The procedure is as follows: On a layout drawing, e.g., Fig. 4.6.J. (p. 4.79), a straight line is constructed from some point on the outer surface of the thermal shield to the outer surface of the concrete. The emergent γ-ray flux, ϕ, is calculated by setting nv equal to the thermal-neutron flux at the graphite-iron interface directly inside the point where the line touches the thermal shield; b is taken to be the path length in relaxation lengths through the concrete — and whatever other material may be traversed — to the outer surface [Eq. (1a)].

2. Neutron Attenuation. Although the neutron attenuation problem is much more difficult to solve than the corresponding γ-ray problem, it is possible to adopt a "recipe" which will yield conservative results. The neutrons which enter the concrete are born in the reactor core with energies corresponding to the familiar fission spectrum. In the process of leaking out of the core and successively penetrating the beryllium and graphite reflectors, the spectrum changes to one in which most of the neutrons are grouped near thermal energies with the remainder in some kind of "tail" which extends to very high energies. The effect of the iron thermal shield on these high-energy neutrons has been described previously. Because of the large capture cross-section, the thermal neutrons which diffuse through the iron are attenuated rapidly in the concrete. However, the degraded but only slightly attenuated fast neutrons must be slowed down and captured in the concrete. Furthermore, the secondary γ rays from these neutron captures must be reduced to tolerance by the shield.

In the recipe adopted for treatment of the fast-neutron attenuation, it is assumed that all fast neutrons entering the concrete are captured after penetrating the concrete by a distance equal to the "age displacement." The secondary γ rays so formed are then postulated to all flow outward with the estimated 10 cm relaxation length. The required shielding is calculated on the basis that these γ rays and the neutrons are to be attenuated to tolerance. It can be shown that this is a more conservative procedure than that of considering an exponentially distributed source of capture γ rays from the absorption of the neutrons in the shield.[20]

The "age displacement" is readily derived, and previous literature[31] gives the result

$$\phi_{th}(Z) \approx \exp \frac{-(Z-\frac{\tau}{\lambda})}{\lambda} \tag{6}$$

Thus the thermal neutrons are also distributed exponentially. However, they have been "displaced" to a larger value of Z by the distance τ/λ, and this is called the "age displacement."

It is reported* that τ for ordinary concrete is about 350 cm^2 and this value has been employed for barytes concrete. Using λ = 11 cm, the age displacement is τ/λ = 31.8 cm. For barytes concrete this displacement was rounded off to 1 ft for use in the calculation of required shield thickness.

No clear-cut method for estimating the neutron current leaving the thermal shield was established analytically. Therefore, the final analysis of the concrete with respect to neutron effects was held in abeyance until certain experimental data were available from the Mock-Up. These data are principally measurements of thermal-neutron flux and of the cadmium ratios at various points in the reactor.

In addition, there was a special experiment designed to establish empirically the total neutron leakage through 8 in. of steel. In this experiment steel bricks were placed in a stack 8 in. thick and 4 ft square. This stack was erected next to the outside surface of the graphite. The steel in turn was backed by a 21-in.-thick stack of paraffin also 4 ft square in the transverse dimensions. Bare and cadmium-covered indium foils placed in the paraffin were activated by the neutrons which penetrated the steel. Complete details of the experiments and the interpretation of the reduced data have been reported elsewhere.[25,26]

This single measurement of the neutron current leaving the thermal shield has been the basis for estimating the current leaving all parts of the shield. The additional data employed in extrapolating the results of this experiment were the thermal fluxes and cadmium ratios at the outer surface of the graphite.

The reasoning employed is as follows:

1. It is observed that the presence of the iron changes the thermal flux at the outer surface of the graphite by not more than 20%. For shielding calculations, the flux may be considered to be unaffected by the presence of the iron.

2. The cadmium ratios on the outer surface of the graphite are very insensitive to changes in distance from the core. This is interpreted to indicate that the spectrum at all positions on the outside of the graphite is nearly at equilibrium.

3. With these data it seems reasonable to postulate that (*a*) the observed thermal flux at the surface of the graphite is proportional to the total flux there, and (*b*) the cadmium ratios at this location are proportional to the fraction of fast neutrons (of the iron-penetrating variety) in the spectrum.

*Private communication from H. P. Sleeper.

In this system the current penetrating the iron is proportional to the fast-neutron flux at the iron-graphite interface. For a slowly varying spectrum, ϕ_f is nearly proportional to the total flux, ϕ_t. To correct for the variations in the spectrum, ϕ_f/ϕ_t is considered to vary inversely as the observed cadmium ratios ρ_{Cd}. Thus the leakage current J_l varies as follows:

$$J_l \approx \phi_f \approx \frac{\phi_{tot}}{\rho_{Cd}} \approx \frac{\phi_{th}}{\rho_{Cd}}$$

Thus the formula used for estimating the neutron leakage current out of the thermal shield is

$$(J_l)_i = J_l \left[\frac{\rho_{Cd}}{\phi_{th}}\right]_{exp} \left[\frac{\phi_{th}}{\rho_{Cd}}\right]$$

where

ϕ_{th} = thermal flux at inner surface of steel, nv/cm^2-sec,

ρ_{Cd} = ratio of activation of bare and cadmium-covered foils,

J_l = leakage current, neutrons/cm^2-sec, experimentally measured.

Subscript "exp" refers to experiment.

Subscript i refers to point under consideration.

Substituting the experimental values,[26] this equation becomes

$$(J_l)_i = 65 \times \frac{1700}{7.9 \times 10^6} \left[\frac{\phi_{th}}{\rho_{Cd}}\right]_i$$

$$(J_l)_i = 1.3 \times 10^{-2} \left[\frac{\phi_{th}}{\rho_{Cd}}\right]_i \qquad (7)$$

Variation of Required Concrete Thickness. The required thickness of the concrete varies from point to point of the thermal shield for two reasons. First, the shielding required opposite the edges and corners of the thermal

shield is reduced by a geometric factor below that required opposite the center of a face of the thermal shield. Secondly, the γ-ray flux leaving the edges and corners of the thermal shield is lower than that leaving a face because of the reduction of the thermal-neutron flux at the inner face of the thermal shield at these locations. The manner in which the minimum design thickness varies is shown in Fig. 4.6.D. The thickness required opposite the center of a face was calculated and this was established as the required thickness opposite the entire face. The minimum shielding required opposite a vertical edge is shown in the figure as a quarter cylinder whose radius equals the thickness required opposite the center of the edge. The shield required opposite a top corner is shown as an octant of a sphere. At points showing a sharp discontinuity in the required shield thickness the greater thickness was used in design.

In order to determine the geometric factor, consider the accompanying sketch, Fig. 4.6.E. This shows a thickness t of concrete and a set of annular rings drawn on the surface of the thermal shield. The thermal shield may be assumed to be a surface source which emits radiation having a cosine distribution. The γ-ray flux at point P, which is a distance a from the surface element of area $r\ d\theta\ dr$ emitting $\phi(0)$ γ's/cm^2-sec with a cosine distribution is given by

$$\phi = \int_{\phi=0}^{\pi} \int_{r=0}^{\infty} B \frac{\phi(0) \cos \theta}{\pi a^2} e^{-\mu a} r \int dr \int d\phi \qquad \gamma \text{ rays/cm}^2\text{-sec}$$

where it is assumed that the face of the thermal shield is infinite in extent. Upon integration this yields

$$\phi = 2B\ \phi(0)\ F_1(b)$$

where $b = \mu t$ and $F_l(b) = b \int_b^{\infty} \frac{e^{-y}\ dy}{y^2}$ (see Appendix 7).

DWG # 10526 [redacted]

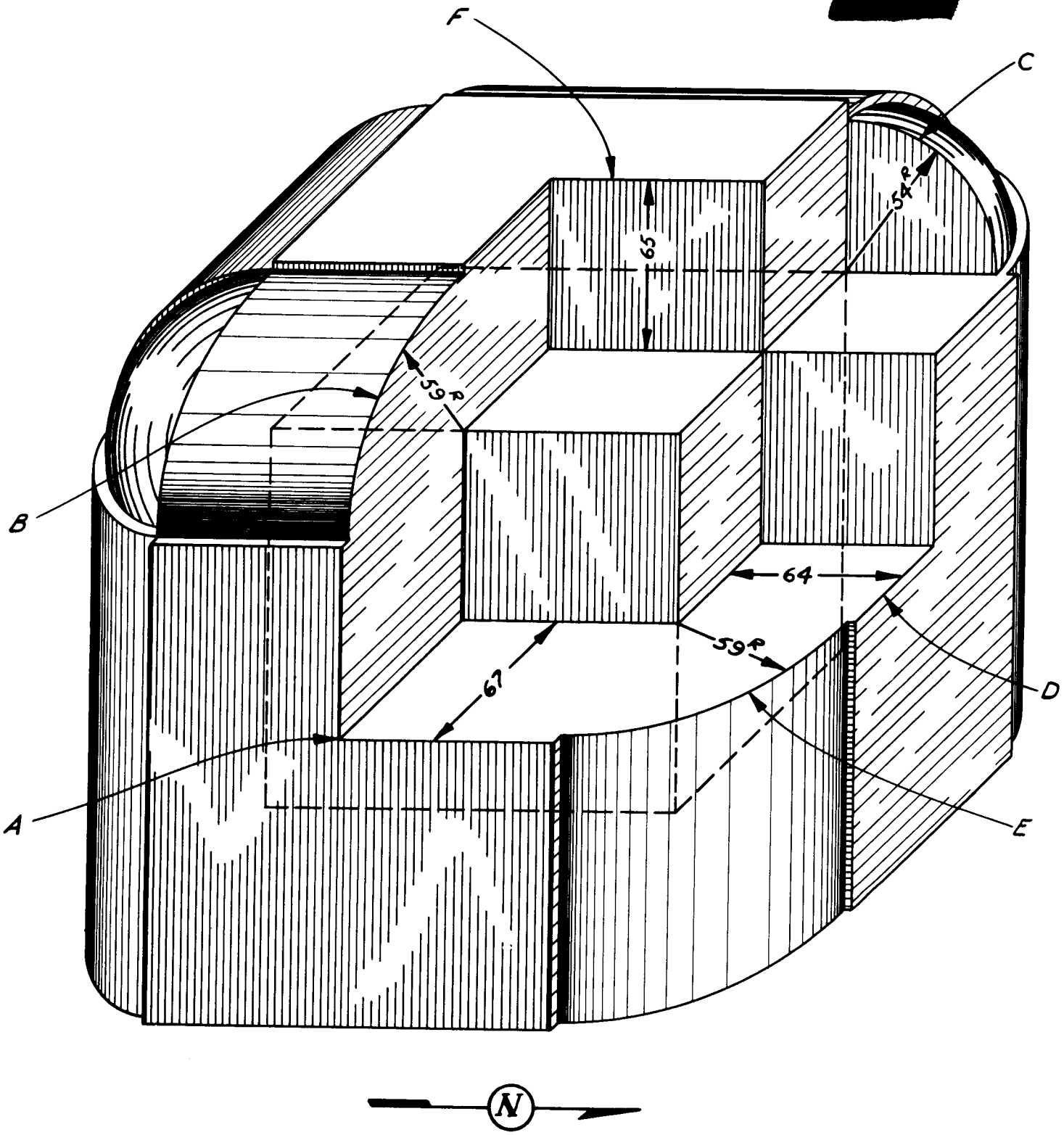

FIG-4.6 D

PICTORIAL REPRESENTATION OF REQUIRED SHIELD THICKNESSES

This is just twice the value given previously using the assumption that the thermal shield is an infinite slab source instead of an infinite plane source with a cosine distribution. The calculations are considered sufficiently conservative that the factor of 2 is neglected. Thus after using approximations for B and $F_1(b)$ as shown previously, the γ flux at P is, as given in Eq. (4a),

$$\phi = \phi(0)\ e^{-b} \qquad \gamma \text{ rays/cm}^2\text{-sec}$$

Actually the thermal shield is not infinite in extent. However, it should be observed in Fig. 4.6.E that as the radius r increases, the path length a through the concrete increases and consequently the contribution of radiation from the outlying surface elements decreases. Graphical integrations have shown that with the concrete thicknesses to be used, the only significant amount of radiation arriving at a point P on the surface of the concrete originates in a circle of radius r = 4 ft on the surface of the thermal shield. Therefore a negligible error is introduced by the assumption of an infinite surface for the thermal shield.

Calculation of Shield Thicknesses. The foregoing design procedures and tolerances have been used to tabulate the required thickness of barytes concrete in various regions of the shield. Table 4.6.C presents the results of thickness calculations together with an explanation. As an example, the attenuation opposite the center of the vertical edges, E, is discussed in detail.

According to the argument earlier in this section and with reference to Fig. 4.6.D, the geometrical factor is ½. Preliminary calculations[28] led to an estimate of a thermal flux of 5×10^{10} neutrons/cm^2-sec at the graphite-steel interface. Although this figure was supported by early experiments on the MTR Mock-Up, a flux of 10^{11} was employed in design as a conservative figure. Equation (2a) gives for the primary γ-ray flux emerging from the thermal shield,

$$\phi(0) = 0.006\ nv_{th} = 6 \times 10^8 \qquad \gamma \text{ rays/cm}^2\text{-sec}$$

DWG. #10525
NOT CLASSIFIED

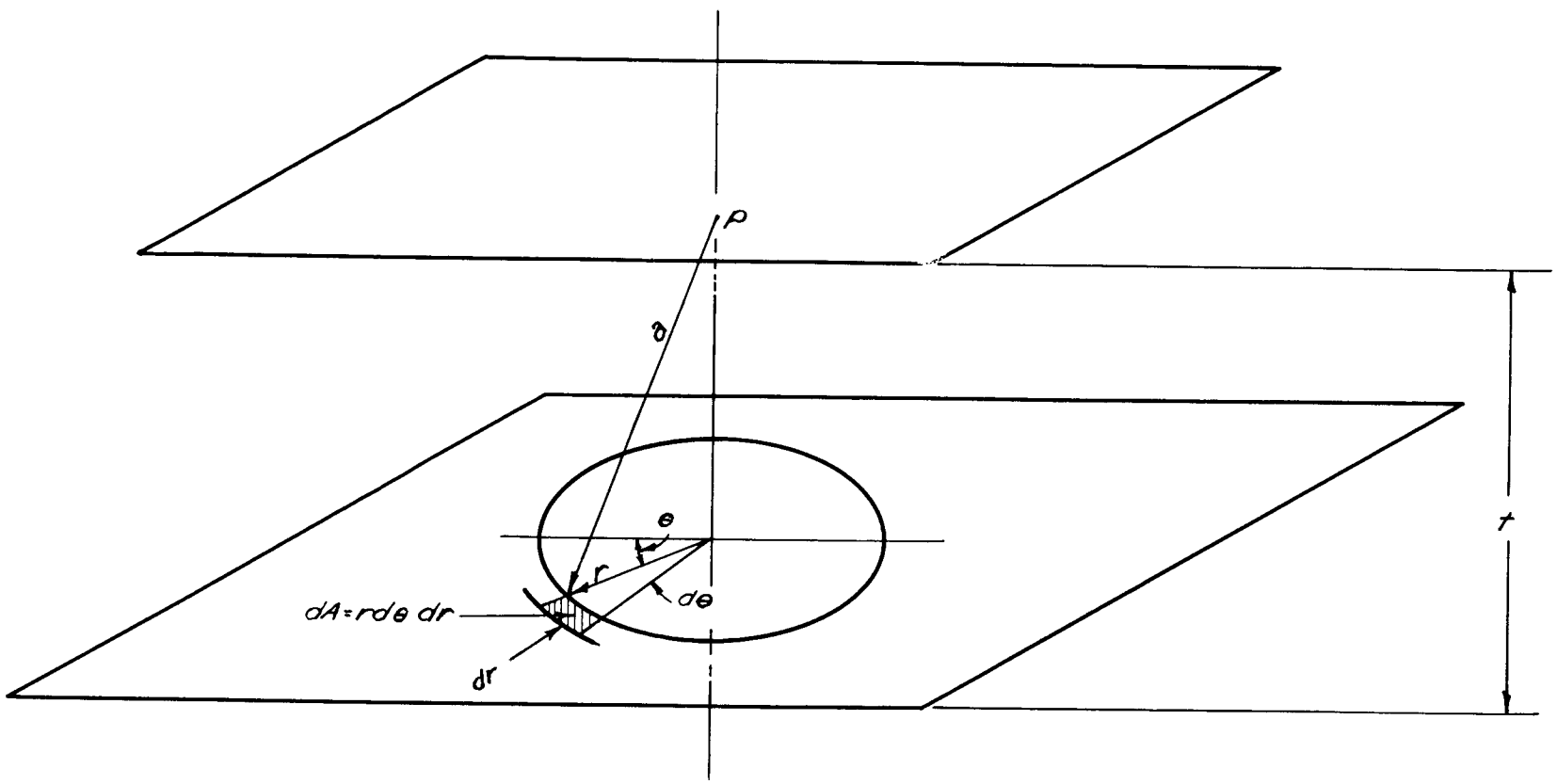

FIG. 4.6.E

GEOMETRIC FACTOR ILLUSTRATION

TABLE 4.6.C

Required Biological Shield Thickness

Position	Geometrical Factor	nv_{th} Calculated (n/cm^2-sec)	nv_{th} Experimental (n/cm^2-sec)	nv_{th} Design (n/cm^2-sec)	γ-Ray Flux Emerging from Thermal Shield (γ rays/cm^2-sec)	Cd Ratio for Design	Neutron Leakage Current Emerging from Thermal Shield (n/cm^2-sec)	Shield Thickness Beyond 1 in. to Attenuate Concrete Capture γ Rays (in.)	Total Shield Thickness to Attenuate Capture Concrete γ Rays (in.)	Total Shield Thickness Required to Attenuate γ Rays Emerging from Thermal Shield (in.)	Total Shield Thickness Required to Attenuate Neutron Leakage Current (in.)
(1)	(2)	(3)	(4)	(5)	(6)	(7)	(8)	(9)	(10)	(11)	(12)
A. Center of N-S vertical faces	1	4×10^{11}	3×10^{11}	4×10^{11}	2.4×10^{9}	900	5.8×10^{6}	44	56	67.2	45
B. Center of top horizontal edges	½	0.5×10^{11}	0.5×10^{11}	1×10^{11}	0.6×10^{9}	1000	1.3×10^{6}	37.2	49.2	59	40.5
C. Top corners	¼	0.25×10^{11}	0.1×10^{11}	0.5×10^{11}	0.3×10^{9}	1000	0.65×10^{6}	35	47	54	38
D. Center E-W vertical faces	1	2×10^{11}	2.5×10^{11}	2×10^{11}	1.2×10^{9}	1000	2.6×10^{6}	40.5	52.5	64	42.5
E. Vertical edges at center plane	½	0.5×10^{11}	0.5×10^{11}	1×10^{11}	0.6×10^{9}	1000	1.3×10^{6}	37.2	49.2	59	40.5
F. Top face	1	2.5×10^{11}	0.7×10^{11}	2×10^{11}	1.2×10^{9}	1000	2.6×10^{6}	40.5	52.5	65	42.5
G. Bottom face	1	6×10^{11}	2×10^{11}	3×10^{11}	1.8×10^{9}	300	3.9×10^{6}	41.5	53.5	66	43.5

(1) Letters A-G refer to Fig. 4.6.G.

(2) See page 4.53.

(3) See references 27 and 28.

(4) Deduced from preliminary results of MTR Mock-Up operation (30)

(5) Conservative value chosen for design calculations.

(6) Calculated from Eq. (2a) in text.

(7) Uncertainties in reported Cd ratios due to low saturated activities from Mock-Up experiments led to adoption of 1000 as maximum value for ρ_{Cd}.

(8) Calculated from Eq. (7) in text.

(9) Attenuation to 100 γ rays/cm^2-sec after converting neutrons in column 8 to γ rays.

(10) Values in column 9 plus 12 in.; evaluated with the aid of Fig. 4.6.H.

(11) Attenuations of values in column 6 to 100 γ rays/cm^2-sec; evaluated with the aid of Fig. 4.6.H.

(12) Attenuation of values in column 8 to 5 n/cm^2-sec; evaluated with the aid of Fig. 4.6.H.

The calculation of the neutron current depends on the choice of the cadmium ratio as discussed earlier in this section. Although examination of the Mock-Up experimental results indicates values ranging from 1200 to 2000 at this distance from the core, a value of 1000 is used for design in an effort again to be conservative. From Eq. (7),

$$J_l = 0.013 \frac{nv_{th}}{\rho_{Cd}} = 1.3 \times 10^6$$

The attenuations required can now be calculated. For the primary γ rays, the attenuation factor is

$$\frac{100}{\frac{1}{2} \times 6 \times 10^8} = 3.3 \times 10^{-7}$$

where 100 γ rays/cm^2-sec is the tolerance dosage. This factor, by Fig. 4.6.F, calls for about 59 in. of material equivalent to barytes concrete (λ = 10 cm). The conversion of neutrons to capture γ rays at the 1-ft displacement distance into the concrete requires attenuation by a factor of

$$\frac{100}{1.3 \times 10^6} = 7.7 \times 10^{-5}$$

which is equivalent to approximately 37 in. of barytes concrete. Adding 12 in. to this gives a total thickness of 49 in. of barytes concrete required outside the thermal shield to attenuate these γ rays. Finally, the neutron attenuation proper can be checked. This requires a reduction factor of

$$\frac{5}{1.3 \times 10^6} = 3.85 \times 10^{-6}$$

where 5 neutrons/cm^2-sec is the tolerance dosage. This corresponds to 40.5 in. of barytes concrete.

According to these calculations, the attenuation requirements of the γ rays are completely dominant. This conclusion is most readily visualized by

DWG. #10418
NOT CLASSIFIED

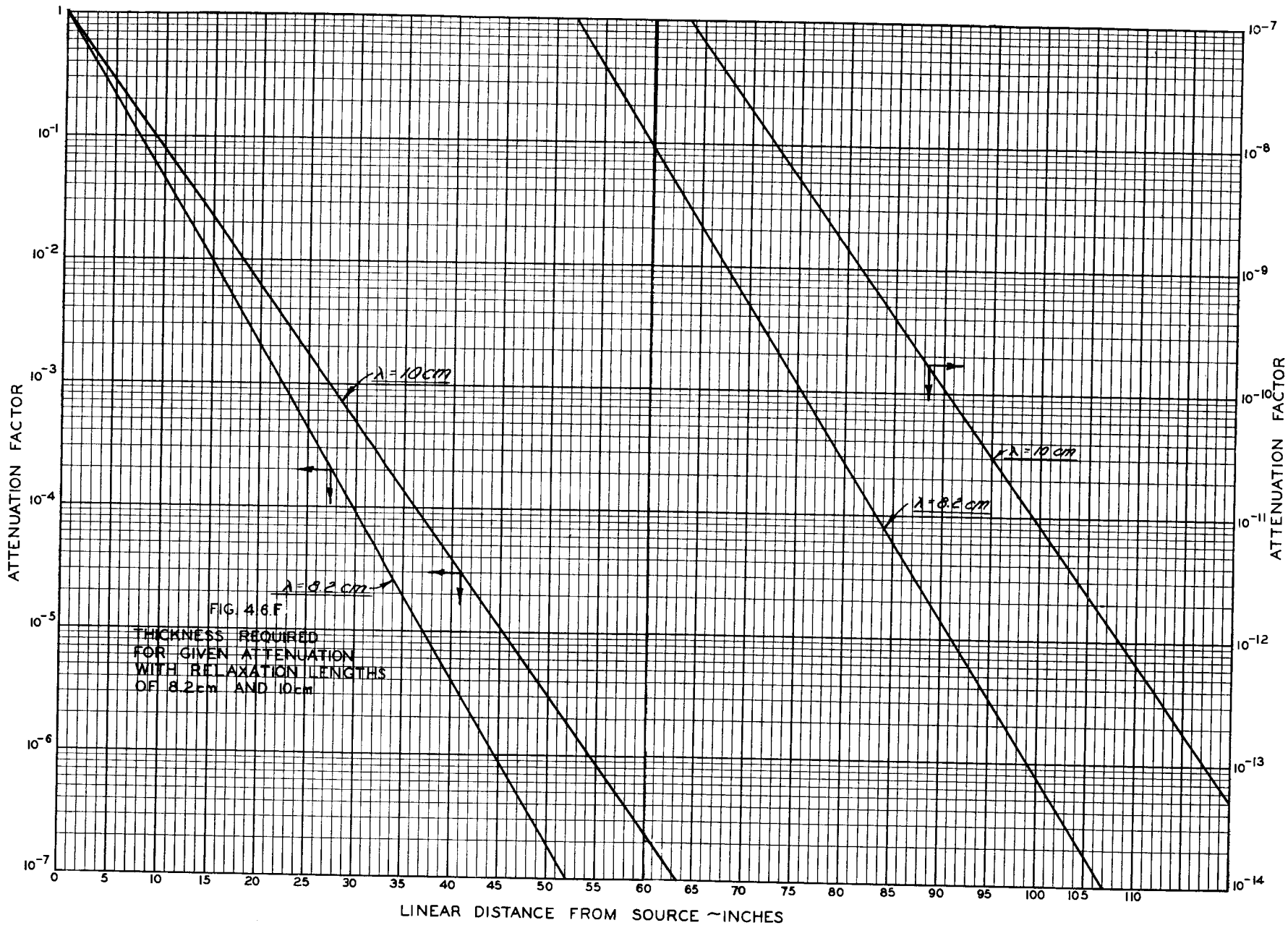

FIG. 4.6.F
THICKNESS REQUIRED FOR GIVEN ATTENUATION WITH RELAXATION LENGTHS OF 8.2cm AND 10cm

reference to a graph such as Fig. 4.6.G. The thermal neutrons at the graphite-steel interface are clearly reduced to a negligible amount by absorption in the steel. The neutrons which penetrate the steel, and their concomitant secondary γ rays, are also negligible in comparison with the primary γ rays leaving the thermal shield. The concrete thicknesses shown are for the most unfavorable locations in the corner regions (Figs. 4.6.H and I). Although the concrete alone is not quite sufficient to reduce these γ rays to tolerance in one instance, the iron walls of the exit air duct are more than sufficient to complete the required attenuation. From Figs. 4.6.G and H the design thickness may be compared with the actual thickness of the concrete; some representative relatively weak locations in the shield are indicated.

4.6.3 Supplementary Shielding Problems. In addition to the most important problem of determining the adequacy of the concrete portion of the biological shield, there are a number of other shielding problems relative to the design of the MTR and associated facilities. These are listed as follows:

1. Shielding requirements of top and bottom plugs.
2. Shielding of inlet and exit water lines.
3. Thermal column shielding.
4. Radiation leakage through ducts in reactor structure.
5. Design of experimental hole plugs.
6. Shielding of external facilities.
7. Shielding requirements for handling active plugs, beryllium, and fuel assemblies.

Details of calculations and design considerations have been issued in various memoranda. These are reviewed below for the purpose of presenting a coherent picture of the shielding requirements of the MTR.

Shielding Requirements of the Top and Bottom Plugs.[34-40] 1. Top Plug Requirements. The shielding of radiation above the active lattice is accomplished by the water in the reactor tank plus the top plug. The depth of water in the reactor tank is adjusted to provide adequate protection after shutdown of the reactor and after the top plug has been removed. Thus the proper design of this portion of the shield depends on the radiation after shutdown as well as during operation of the reactor. The original design established the requirements to be 17½ ft of water plus a 21-in. iron plug. Actually, however, the plug was made hollow with provision for filling it up

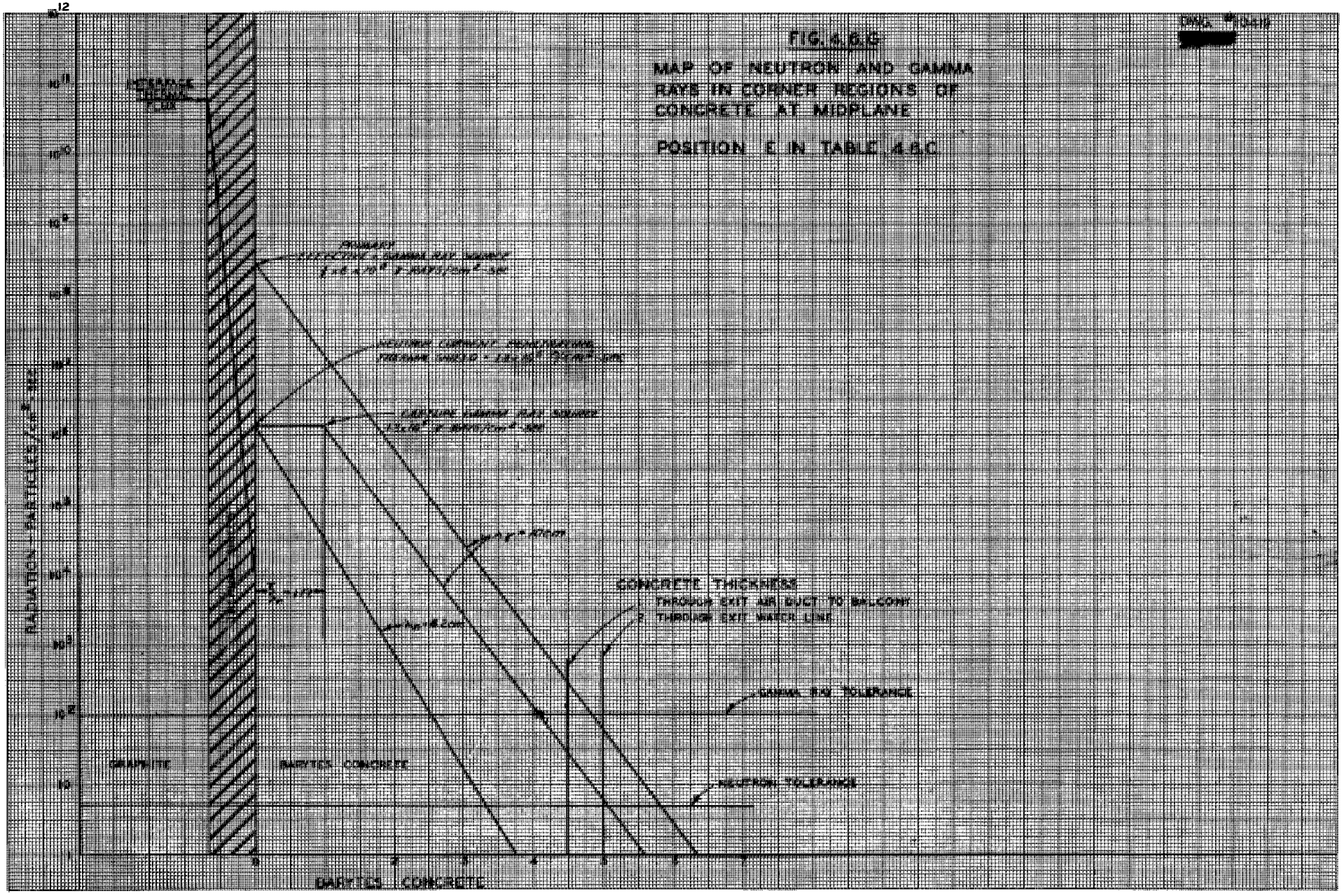

FIG. 4.6.6

MAP OF NEUTRON AND GAMMA RAYS IN CORNER REGIONS OF CONCRETE AT MIDPLANE

POSITION E IN TABLE 4.6.C

DWG. # 10421 [redacted]

LINE	IRON	WATER	BARYTES CONCRETE	TOTAL EQUIV CONCRETE	REQUIRED CONCRETE THICKNESS TABLE III
	IN.	IN.	IN.	IN.	IN.
1.	2	22	71	85	67
2	12	22	33	70	67
3	11	–	45	71	59
4	2	–	66	71	67

REFERENCE DRAWING

BK 3150-502-1

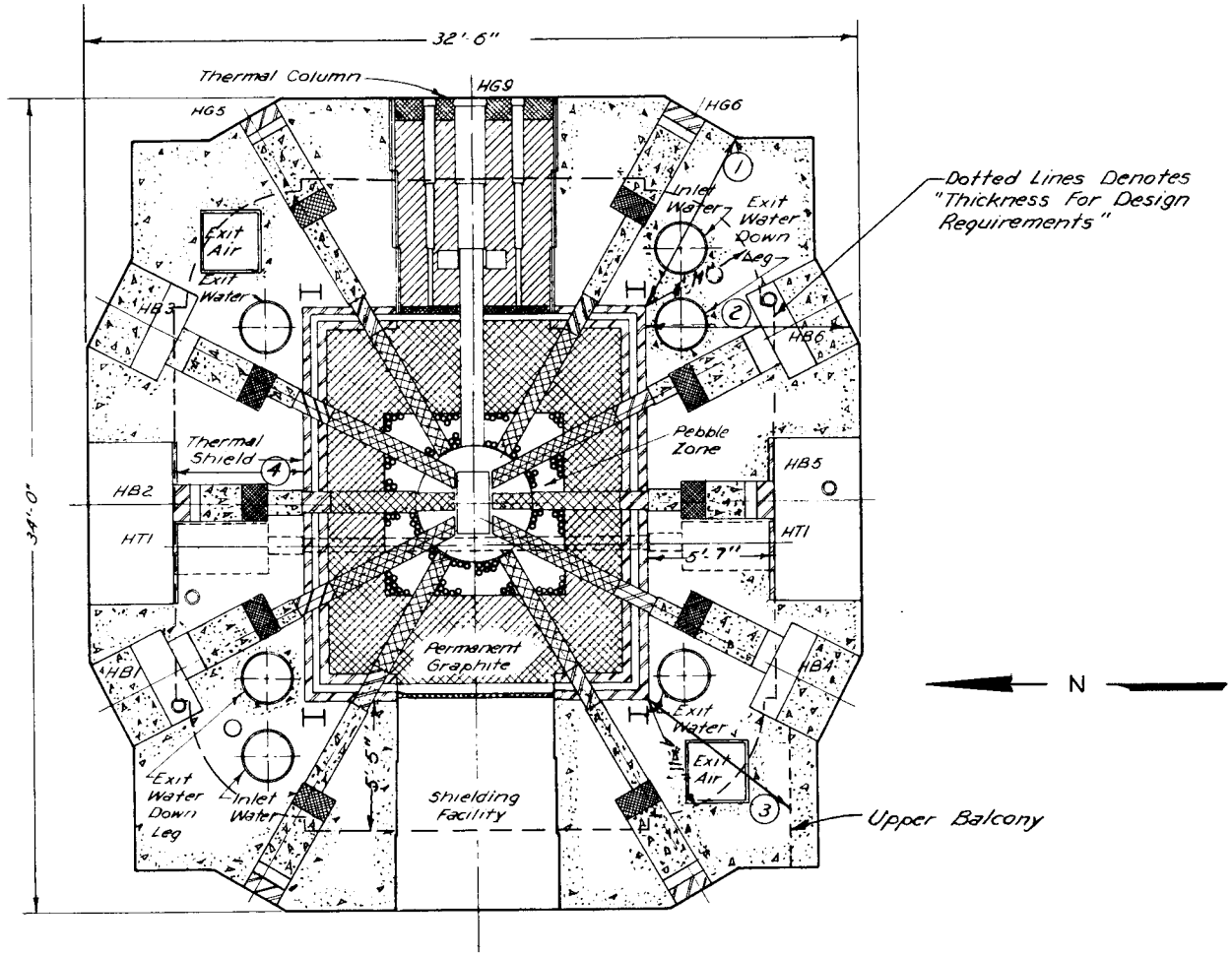

FIG. 4.6.H.

COMPARISON OF OVERALL BARYTES CONCRETE THICKNESS WITH DESIGN REQUIREMENTS

DWG. # 10420 [redacted]

LINE	THICKNESS				REQUIRED CONCRETE THICKNESS TABLE III
	IRON	WATER	BARYTES	TOTAL EQUIV. CONCRETE	
	IN.	IN.	IN.	IN.	IN.
1.	1.5	-	77	80	54
2.	2	-	95	100	54
3.	10	22	50	82	66
4.	55	20	9	84	66

REFERENCE DRAWINGG
BK 3150 502-4

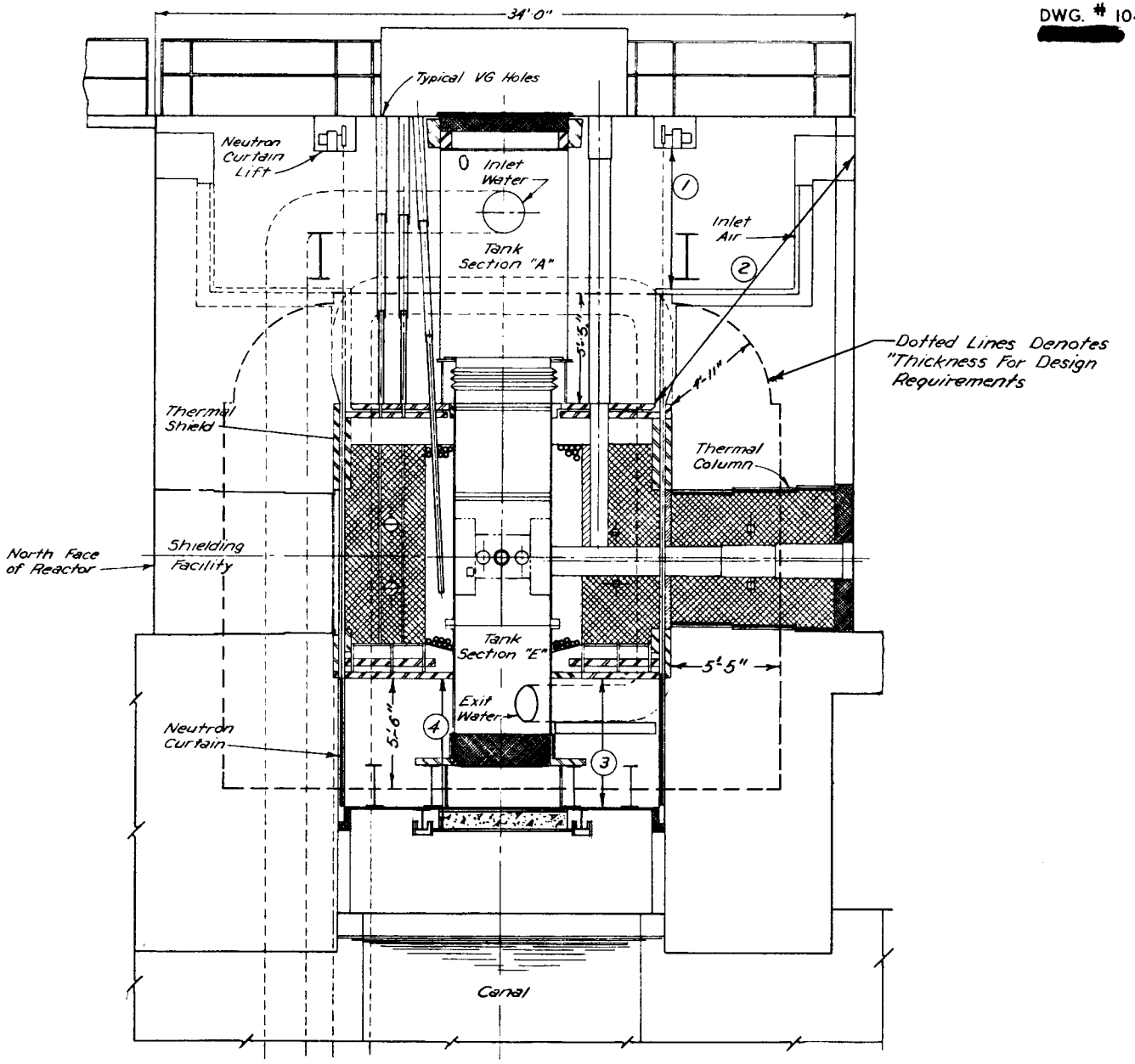

FIG. 4.6.I

COMPARISON OF OVERALL BARYTES CONCRETE THICKNESS WITH DESIGN REQUIREMENTS

to 8 in. with lead or lead shot. Thus the design and construction of the top plug could proceed independently of the exact shielding requirements, which would be determined by actual measurements in the Mock-Up at a later date. These measurements were carried out and reported in ORNL CF-50-8-85.[32] The data extrapolated to conditions of operation of the MTR indicate that without the top plug the γ-ray intensity will be about 200 mr/hr at 30 mw power. This means that 7 in. of lead shot plus the 3 in. of steel in the plug are required to reduce the γ-ray intensity to 1.2 mr/hr at 60 mw power. The following paragraphs summarize the calculations used as a basis for the design of the top plug and a comparison of calculated values with data from the Mock-Up.

(*a*) Gamma Production in the Active Lattice. It is assumed that on the average, a 72- by 24- by 60-cm portion of the core will contain active fuel elements. With such a loading, there will be about 3.5 kg of U^{235} in the core and at 30 mw the average neutron flux will be 2×10^{14}. The γ-ray source in the active section is given as follows:

SOURCE	REACTOR CROSS SECTION, $N\sigma$ (cm^2)	γ RAYS PER CAPTURE	
U fission	4900	5	1-Mev fission γ's
		2	2.5-Mev fission product γ's
U capture	800	1	6-Mev γ
H_2O capture	1320	1	2-Mev γ
Al capture	588	1	8-Mev γ
Th capture	610	1	6-Mev γ

The source strength is given by the product of the neutron flux, cross-section, and γ-ray energy per capture divided by the core volume. Combining γ-rays of similar energies gives the following source spectrum:

GAMMA SOURCE (Mev)	Q_v (Mev/cc-sec)	(watts/cc-sec)	μ_s (cm^{-1})
1	47.5×10^{12}	7.6	0.099
2.5	52.6×10^{12}	8.4	0.072
6	16.3×10^{12}	2.6	0.044
8	9.0×10^{12}	1.44	0.039

At large distances from the reactor centerline, the radiation intensity may be calculated by simple conventional formulas. Thus for each of the γ-ray sources, the intensity is given by

$$I = 1.9 \times 10^{-3} \frac{Q_v A}{4\pi \mu_s a^2} e^{-\mu a/1.2}$$

where

I = intensity, mr/hr.

1.9×10^{-3} = conversion factor, Mev to mr/hr.

Q_v = source strength, Mev/cc-sec.

A = area of top of active section, cm^2.

μ_s = absorption coefficient of core, cm^{-1}.

a = distance above active lattice = 565 cm.

μ = absorption coefficient of water, cm^{-1}.

1.2 = factor for forward scattering.

Therefore,

$$I = 8.2 \times 10^{-7} \frac{Q_v}{\mu_s} e^{-565(\mu/1.2)}$$

Using this equation and values of Q_v shown in the previous table, the resultant γ-ray intensities I at the top plug are given in the following table:

GAMMA SOURCE (Mev)	$\mu/1.2$ (cm^{-1})	$565\mu/1.2$	$e^{-\mu a/1.2}$	I (mr/hr)
1	0.058	32.8	10^{-14}	
2.5	0.033	18.7	10^{-8}	
6	0.023	13.0	2.2×10^{-5}	670
8	0.020	11.3	1.2×10^{-5}	2300
Total intensity without top plug				3000

This theoretical value is a factor of 15 above the values measured in the Mock-Up. The difference is presumably due to the fact that the assumed energy of the capture γ rays is too high. Recent capture γ-ray spectral data[33] verify this and show that the average energy of aluminum capture γ rays is in the range 5 to 7 Mev rather than 8 Mev.

(*b*) Mock-Up Data. Vertical measurements were made through approximately 11 ft of water, starting at a point 4 ft above the horizontal centerline of the reactor. Three horizontal traverses were made at various depths. The low intensity of Mock-Up operation (i.e., 270 watts) did not permit measurement of the attenuation of the full depth of water. However, since the attenuation was exponential over a factor of 1000, it was felt that an extrapolation of an additional factor of 100 could be made with reasonable certainty. This value, multiplied by 10^5 to allow for the difference in power level between the Mock-Up and the MTR, indicates that a γ-ray flux of approximately 200 ± 100 mr/hr would be transmitted through the water. To reduce this to 1/10 tolerance (1.2 mr/hr) at 60 mw power requires an attenuation factor of 300 by the lead and iron in the top plug. This is equivalent to 5.7 relaxation lengths. Since the top plug contains 2½ in. of steel or 1.5 relaxation lengths, an additional 3½ in. of lead or 6 in. of lead shot is required for the top plug.

(*c*) Radiation Intensity After Shutdown. The total γ-ray activity following infinite operation of a reactor is, according to estimates by K. Way,[10] given by

$$(Q_0E) = 6.3\ ft^{-0.2} \qquad \text{Mev/sec}$$

where

f = fissions/sec in source.

t = time after shutdown.

The hard γ-ray activity (about 3 Mev) after shutdown, however, depends on the yield and decay of specific fission product chains. These have been measured by the photoneutron threshold reaction in heavy water. The average lifetime and yield of the γ rays of energies higher than this value are:

t (mean)	A_γ (yield/fission)	ENERGY (Mev)
76 hr	0.0015	~3
6.3 hr	0.0042	~3
2.4 hr	0.045	2.6
39 min	0.038	2.6
11 min	0.046	3
3.4 min	0.132	2.6
59 sec	1.58	2.25
3.6 sec	0.675	3.4

Using the same method as in the calculation of the radiation intensity during operation of the reactor, but considering only the hard fission product γ rays listed above, the γ-ray intensity at the top of the reactor well may be calculated as a function of the time after shutdown. In this case the source term at 30 mw power is given by

$$30{,}000 \times 3.1 \times 10^{13} = 9.3 \times 10^{17} \text{ fissions/sec}$$

$$Q_v = \frac{(9.3 \times 10^{17})(A_\gamma E)_t}{24 \times 72 \times 60} \qquad \text{Mev/cc-sec}$$

and

$$Q_v = 9 \times 10^{12}(A_\gamma E)_t$$

The radiation intensity at the surface of the water after shutdown is

$$I = 6 \times 10^6 (A_\gamma E)_t \frac{e^{-530(0.035)}}{\mu_s}$$

Assuming average energy of hard γ-rays to be 2.75 Mev,

$$I = 1.4(A_\gamma E)_t \qquad \text{mr/hr}$$

Values of $(A_\gamma E)_t$, Q_v, and the γ-ray intensity at various times after shutdown are shown in the following table:

TIME AFTER SHUTDOWN	$(A_\gamma E)_t$ (Mev/fission)	Q_v (Mev/cc-sec)	I (mr/hr)
10 sec	4.37	39.5×10^{12}	6.2
10 min	0.32	2.9×10^{12}	0.5
1 hr	0.11	1.0×10^{12}	0.15
1 day	0.003	0.027×10^{12}	0.04

This indicates that the water gives adequate protection following an elapsed time greater than 10 min after shutdown of the reactor.

2. Shielding Requirements of the Bottom Plug. The original design of the reactor tank closure beneath the active lattice consisted of numerous layers of steel and water. In view of the large number of water monitoring tubes penetrating this section, the construction of such a plug was difficult. The present design consists of a steel cylinder filled with lead. The water monitoring tubes which penetrate this plug and which during operation carry active water are shielded by a sliding concrete door beneath the bottom plug.

Personnel in the sub-pile room are thus shielded from the γ rays leaving the active lattice by both the lead plug and the concrete door. The required thickness of the lead portion of this shield is calculated as follows: Data from the Mock-Up on the radiation escaping upward through the water may be used to estimate the intensities below the active lattice since reactor components are approximately the same above and below the centerline. The bottom plug starts at a point 245 cm below the active lattice. At this level, the γ intensity during operation at 30 mw power will be 4×10^7 mr/hr. Since previous calculations as well as the slope of the curve of Mock-Up data indicate that the energy of the hard γ-ray components (i.e., capture γ-rays from Al, Fe, Be, etc.) is about 5 Mev or lower, the following absorption coefficients based on this energy may be used for estimating the required amounts of lead and barytes concrete:

ABSORBER	μ (cm^{-1})
H_2O	0.03
Fe	0.235
Pb	0.46
Pb shot (D = 6.8)	0.28
Barytes concrete	0.10

At 12.5 ft from the active lattice (minimum distance of approach) the γ-ray intensities will be

$$I = \frac{(4 \times 10^7)(245)^2}{(385)^2} e^{-b} \qquad \text{mr/hr}$$

where

$$b = \mu_{Fe} X_{Fe} + \mu_{Pb} X_{Pb} + \mu \text{ concrete X concrete}$$

The proposed design consists of 17 in. of lead shot and 3 in. of iron in the bottom plug plus 9 in. of barytes concrete and 1 in. of iron in the door beneath the bottom plug.

Thus

$$b = 4(0.6) + 17(0.71) + 9(0.25) = 16.7$$

$$e^{-b} = 5.4 \times 10^{-8}$$

and

$$I = 0.9 \text{ mr/hr in the sub-pile room}$$

The bottom plug and concrete door give adequate protection from pile radiation.

3. Leakage Around Top and Bottom Plugs. Leakage around the sides of the top and bottom plugs is prevented by supplementary shielding rings at the edges of the plugs. The required thicknesses of these rings were established by measuring, on appropriate drawings, the actual thicknesses of water, steel,

concrete, etc. along many different paths and adding shielding where necessary to give the same total attenuation as on the reactor vertical centerline. In all cases conservative data were used to establish the required total attenuation, which resulted in some overdesign at these locations. Specific details of calculations are summarized in MTR Shield Survey Reports.[30,31]

4. Thickness of Door Under Bottom Plug. In addition to shielding the water monitor tubes, the door under the bottom plug must protect personnel from neutrons escaping the steel thermal shield. Calculations verifying the adequacy of the door for neutron protection are reviewed as follows:

Neutron source: 3×10^9 fast neutrons/cm^2-sec incident on inner face of 8-in. steel thermal shield.

Neutron tolerance: 100 neutrons/cm^2-sec, corresponding to 10 mr/hr.

The neutron attenuation by the 9 in. of steel, whose effective relaxation length is 4.9 cm, is

$$e^{-23/4.9} = 10^{-2}$$

The neutron attenuation by the biological shield (2 ft 9 in. barytes concrete), whose relaxation length for neutrons is 8.2 cm, is

$$e^{-10.3} = 3.5 \times 10^{-5}$$

The neutron attenuation in the door (9 in. barytes concrete) is

$$e^{-2.8} = 6.2 \times 10^{-2}$$

The total neutron attenuation is 2.2×10^{-8}, i.e., the neutron intensity below the door will be about 70 neutrons/cm^2-sec, which is below tolerance.

Shielding of Inlet and Exit Water Lines. 1. Shielding of Exit Water Lines.[34-38] The activity of the water leaving the reactor is due mainly to the N^{16} activity formed from the reaction $O^{16}(n,p)N^{16}$. This is a fast-neutron reaction having a threshold at about 9.5 Mev and a cross-section of about 1 barn. Since a small fraction (about 1/50,000) of the fission neutrons have energies above 9.5 Mev, the *effective* cross-section per fission neutron is about 0.014 mb or 1.4×10^{-29} cm^2. The activity of the water leaving the reactor is given by

$$A = nv\,\sigma_f(1 - e^{-\lambda T})e^{-\lambda t}$$

where

nv = fast flux in lattice = 10^{14} neutrons/cm^2-sec at 30 mw.

σ_f = cross-section for N^{16} production = 0.014 mb or 4.68×10^{-7} cm^2 per cubic centimeter of water.

λ = N^{16} decay constant = 0.092 sec^{-1}.

T = exposure time in lattice = 1/15 sec.

t = decay time after leaving lattice.

A = activity, disintegrations/cc-sec.

Thus

$$A = 2.88 \times 10^5\ e^{-\lambda t}\ \text{dis/cc-sec.}$$

Since the average energy of the N^{16} γ ray is 6.5 Mev, the water activity is $1.85 \times 10^6\ e^{-\lambda t}$ Mev/cc-sec.

The required shielding of the exit water lines varies with the distance from the active core owing to the relatively rapid decay of N^{16}. Referring to drawing DRP-69, which shows the layout of air ducts and water lines within the reactor structure, the activity at critical locations along the exit water lines may be calculated from the flow rate and corresponding decay times. The water activity at strategic points is summarized as follows, based on a flow rate of 20,000 gpm:

LOCATION	DECAY TIME (sec)	WATER ACTIVITY FROM N^{16} (Mev/cc-sec)
A. Leaving reactor tank	2.3	1.5×10^6
B. Vertical rise at reactor centerline	4.1	1.28×10^6
C. Center of top of loop	6.6	1.0×10^6
D. Leaving reactor structure	15	4.6×10^5
E. Leaving Reactor Building	26	1.7×10^5
F. Entering seal tank	63	5.5×10^3

The required shielding may be calculated by the method outlined in the Project Handbook CL-697, VF 5, for a cylindrical source. The intensity at the surface of a shield b cm thick is

$$I = \frac{QR^2}{2(b + z)} F(B)$$

where

I = γ-ray intensity, Mev/sec.

Q = source strength, Mev/cc-sec.

R = radius of pipe, 30.5 cm.

$B = \nu z + \mu b$ (ν = absorption coefficient of water and μ = absorption coefficient of shield).

z = effective position of line source equivalent to distributed source (CL-697, VF 5, Fig. 5).

$F(B)$ = distribution function (CL-697, VF 5, Fig. 2).

At point A the shield consists of 5 ft of barytes concrete plus some iron. The γ-ray intensity at the ceiling of the sub-pile room due to N^{16} is calculated from the following data:

$Q = 1.5 \times 10^6$ Mev/cc-sec.

z = 18 cm (from CL-697, VF 5).

$\nu = 0.026$ cm^{-1}.

b = 153 cm.

$\mu = 0.09$ cm^{-1}.

$F(B) = 2.5 \times 10^{-7}$.

$$I = \frac{(1.5 \times 10^6)(30.5)^2}{2(171)} (2.5 \times 10^{-7}) = 1 \text{ Mev/sec} = 2 \times 10^{-3} \text{ mr/hr}$$

Thus the contribution of the water activity to the intensity in the sub-pile room is negligible.

2. Shielding of Water Inlet Lines.[39-44] The residual activity of the process water after decay of N^{16} is due to the neutron activation of dissolved minerals and aluminum recoil activity. The significant reactions are listed as follows:

REACTION	MECHANISM	$t_{1/2}$	CROSS-SECTION	RECOIL RANGE IN Al (cm)
$Na^{23}(n,\gamma)Na^{24}$	Neutron absorption	14.8 hr	0.5 b	
$O^{18}(n,\gamma)O^{19}$	Neutron absorption	29.4 sec	0.44 μb	
$Al^{27}(n,\gamma)Al^{28}$	Slow recoil	2.3 min	0.21 b	1.2×10^{-6}
$Al^{27}(n,\gamma)Al^{28}$	Fast recoil	2.3 min	0.4 mb	2.4×10^{-4}
$Al^{27}(n,p)Mg^{27}$	Fast recoil	10.2 min	2.8 mb	2.4×10^{-4}
$Al^{27}(n,\alpha)Na^{24}$	Fast recoil	14.8 hr	0.6 mb	2.4×10^{-4}
$Mn^{55}(n,\gamma)Mn^{56}$	Slow recoil	2.6 hr	13.0 b	1×10^{-5}

The activity of the process water excluding N^{16} activity is calculated for the following system conditions:

Flow rate	=	20,000 gpm
Purge rate	=	50 gpm
System holdup	=	348,000 gal
Cycle time	=	17.4 min or about 1000 sec
Activation time	=	1/15 sec
Slow flux	=	2×10^{14} neutrons/cm^2-sec
Fast flux	=	1×10^{14} neutrons/cm^2-sec
Area of exposed Al	=	10^6 sq cm

Water composition

Ca	1 ppm
Mg	0.5 ppm
Cl	1 ppm
Al	0.05 ppm
Fe	0.05 ppm
Na	5 ppm
K	1 ppm
F	0.1 ppm
N	0.02 ppm

The activity due to the absorption of neutrons by dissolved minerals after recycle equilibrium is reached is

$$A = \frac{\lambda K}{(1 - Be^{-\lambda T})}$$

where

A = activity, dis/cc-sec.

λ = decay constant, sec^{-1}.

K = isotope reduction per cycle.

B = concentration factor = 20000/20050 $\approx$ 1.

T = cycle time.

K = $nv\Sigma a t$ (for half-lives >> t).

Σ_a = cross-section of mineral per cubic centimeter of water.

The aluminum recoil activity is

$$A = \frac{nv\ \sigma_a (0.602)\ (\text{range})\ (\text{area})\ D\lambda}{4\omega F(1 - Be^{-\lambda T})}$$

where

σ_a = cross-section, barns.

Range = recoil range, cm.

Area = 10^6 cm^2.

D = density of aluminum.

F = cycle flow rate, cc/sec.

ω = atomic weight of recoil nucleus.

Principal activities in the water entering the reactor are:

	(dis/cc-sec)	E (Mev)	(Mev/cc-sec)
Na^{24}	1160	2.2	2550
Mg^{27}	488	1.48	725
Mn^{56}	145	2.13	310
Al^{28}	26	1.80	50
Total			3635

The activity due to accidental exposure of core material, resulting from loss of Al cladding from a fuel plate, is calculated as follows. The fractional escape of fission recoils from the surface of a slab source is $1/4\alpha$, where α is the ratio of the mass thickness of the slab to the range of the fission fragments, or $5.6 \times 10^{-3}/1.05 \times 10^{-4} = 54$. Thus the fraction $1/4(54) = 1/216$ will escape from an exposed surface. At 30 mw there are 10^{18} fissions/sec or 6.7×10^{12} fissions/cc-sec. The number of fission fragments escaping per square centimeter is therefore 3×10^{10}. Since the flow rate per plate is 28 gpm, the activity in the water is 1.75×10^{7} fissions/cc-sec.

Although the activity of the fission fragments which escape into the water is due to the fission products, these decay relatively rapidly. According to K. Way,[10] the disintegration energy is $0.3t^{-0.8}$ Mev/sec (fission). After 1000 seconds, it will be 1.2×10^{-3} Mev/sec (fission), or the total activity per square centimeter of fuel plate exposed is 2.1×10^{4} Mev/cc-sec. Since there are 18 plates per fuel assembly and 25 fuel assemblies, the activity per square centimeter exposed in the reactor core will be 47 Mev/cc-sec. For activity to be detectable, at least 10 sq cm of U-Al alloy must be exposed.

The shielding of the inlet water lines required due to the residual fission product and recoil activity may be calculated by conventional methods outlined previously. For the above conditions about 1 ft of barytes aggregate concrete is required for the inlet lines.

Thermal Column Shielding.[45-48] This large hole through the biological shield, though filled with graphite, produces a difficult γ-ray shielding problem. For this reason the thermal column sides must be lined with cadmium, steel, and lead plates, and the face must be provided with a removable γ

shield. This removable shield is in the form of a sliding lead door, 10 in. thick, which may be raised for access to the column.

1. Neutron Flux Calculations. The original calculations of the thermal-neutron flux in the thermal-column graphite were carried out in 1947.[45] These data were later corrected for changes in the design of the graphite reflector by multiplying by a factor of 3. This normalizes values to a figure of 3×10^{12} neutrons/cm^2-sec at the inside of the thermal column which is in agreement with calculated neutron flux distribution curves[24] and data from the Mock-Up previously cited.

2. Required Thickness of Sliding Lead Door. A maximum value of the radiation intensity penetrating the graphite in the thermal column may be obtained by considering the column to consist of a number of slab sources with the contribution of each concentrated at its surface. Each neutron absorbed in the graphite gives rise to a 6-Mev γ ray. Assuming each slab to be 25 cm thick, a slab x cm from the outside of the thermal column gives rise to

$$I = \frac{I_0}{2} F_0(\mu x + \nu a) \qquad \gamma\text{'s/cm}^2\text{-sec}$$

where

$$I_0 = N\sigma_a \; t \; S(x) = 25 \; (4 \times 10^{-4}) \; S(x) = 10^{-2} \; \gamma\text{'s/cm}^2\text{-sec.}$$

$S(x)$ = thermal flux at x.

μ = absolute coefficient of graphite = 0.03 cm^{-1}.

ν = absolute coefficient of lead = 0.44 cm^{-1}.

a = thickness of lead door

$$F_0(b) = \int_b^\infty \frac{e^{-y}}{y} \, dy \qquad \text{(from CL 697 VF)}$$

Contributions from each section of the thermal column with a 10-in. lead door are summarized as follows.

DISTANCE FROM DOOR, x (cm)	$S(x)$ (n/cm^2 sec)	$\mu x + \nu a$	$F_0(\mu x + \nu a)$	I (γ/cm^2 sec)
0	0	11.25	1.14×10^{-6}	0
25	1.9×10^{9}	12.0	5×10^{-7}	5.0
50	7.5×10^{9}	12.75	2×10^{-7}	7.5
75	1.7×10^{10}	13.50	1×10^{-7}	8.5
100	3.6×10^{10}	14.25	4.5×10^{-8}	8.0
125	7.2×10^{10}	15.0	2×10^{-8}	7.2
150	1.4×10^{11}	15.75	8×10^{-9}	5.6
175	2.5×10^{11}	16.52	4×10^{-9}	5.0
200	4.5×10^{11}	17.25	1.8×10^{-9}	4.0
225	8.4×10^{11}	18.0	9×10^{-10}	3.8
250	1.5×10^{12}	18.75	4×10^{-10}	3.0
275	3.0×10^{12}	19.5	2×10^{-10}	3.0
				60.6

This is equivalent to 480 Mev/cm^2 sec or about 1 mr/hr, which is below 1/10 tolerance.

Radiation Leakage Through Ducts in Reactor Structure.[49-52] The numerous holes penetrating the biological shield complicate the problem of designing a satisfactory shield. The total intensity outside the shield is increased in the vicinity of holes by radiation penetrating the section of the shield which is effectively thinner. Additional radiation may be received by scattering from the walls of the opening. Experiments which have been performed with shields penetrated by curved or staggered ducts indicate that the direct penetration through the thin part of the shield is usually more effective than scattering in increasing the γ intensity in the vicinity of the opening. This is especially true for ducts with multiple bends. To determine the adequacy of the biological shield in the vicinity of an opening, the following procedure may be used:

By inspection of a layout of the shield structure, a danger point is selected and a line along the path of minimum attenuation determined. This line is generally in a direction from the outer to the inner mouth of the duct. The intensity contribution of the surface element at the source of the minimum path is calculated, as well as the contribution of all neighboring surface elements which can be "seen" through the effectively thinner portion of the shield. These neighboring contributions usually fall off very rapidly as elements further from the minimum line are considered.

The intensity contribution of each surface element is calculated by assuming it to be a point source. Figure 4.6.J represents a cross-section of a duct through the shield. For each surface element ΔA, the contribution at P is

$$I = \frac{I_0 \; e^{-b}}{R^2}$$

where

$I_0 = \phi_A \, E(\Delta A) \cos \theta / \pi$.

$\phi = \gamma/\text{cm}^2\text{-sec}$ at source.

$E = \gamma$-ray energy.

$b = \mu r_1 + \mu r_2 + \ldots$.

r_1, r_2 = actual sections of shield penetrated.

μ = absolute coefficient of shield.

R = distance from source to point $P = t \sec \theta$

For simple geometries, the variation of b from element to element can be approximated by a simple mathematical expression and the total intensity found by integration. Otherwise the easiest approach is to measure the actual thickness of shield material traversed along a straight line from each source element and add algebraically the separate intensity contributions. The total intensity should be multiplied by a B factor to allow for the forward scattering in the shield. This is usually about a factor of 10 for thick shields.

The contribution of radiation scattered along the duct from the walls of the duct may be estimated by the same method as determining the scattering by mass elements within the shield itself. Essentially the method consists of breaking the scatterer (i.e., the duct wall) into a number of mass elements ΔM and assuming each to be a point of secondary radiation. The energy of the secondary γ rays is a function of the energy of the primary and the angles of incidence and reflection. The secondary intensity is the sum of all the point sources considered. A detailed analysis of the calculation of scattered radiation is given in ORNL-710.[4]

DWG. #10801
NOT CLASSIFIED

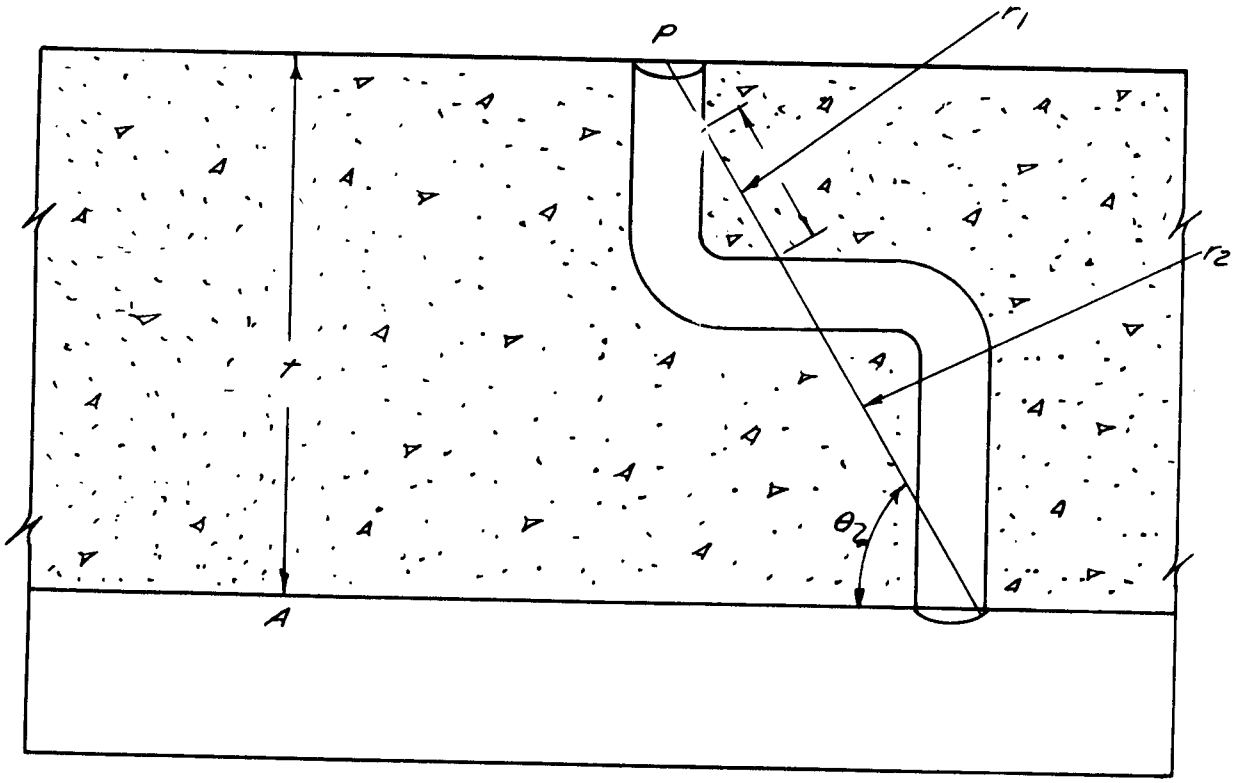

FIG. 4.6.J

Design of Experimental Hole Plugs.[53-57] In general, the problem of designing plugs adequate to prevent escape of radiation from experimental holes during operation of the reactor may be simplified by duplicating in the plug the various portions of the shield through which it passes. Precaution must be taken to stop radiation leakage through the annulus between the beam hole liner and the plug by providing a number of steps. These should be kept to a minimum, however, since each step increases the diameter of the plug which must be shielded after removal from the reactor. The amount of radiation leaking through the annulus may be estimated by the same method as for voids in the shield, which has been described previously. The major contribution is the radiation penetrating the effectively thinner portions of the plug rather than that from scattering around the step. The leakage through the annulus around the beam hole plug depends therefore on the width of the annulus and size of the step in the plug rather than on the number of steps. Measurements of the radiation through a narrow staggered channel by Gamertsfelder (in a report by Stone[57]) may be used to verify this. For the MTR main beam holes, a ½-in. step with a 1/8-in. annulus gives adequate protection.

1. Shielding Requirements After Removal of Plug. In order to protect personnel after the plug has been removed and after shutdown of the reactor, each beam hole is equipped with a lead radiation door 12 in. thick. The radiation intensity at the outside of the beam hole with the lead door closed is estimated as follows: It has been shown previously that 10 min after shutdown the reactor core emits 2.9×10^{12} Mev/cc-sec of hard γ-ray radiation. Since at relatively large distances from the reactor the core acts like a point source, the intensity at the end of an open beam hole is given by

$$I = \frac{1.9 \times 10^{-3}\, Q_v A}{4\pi\mu_s a^2}\, e^{-\mu x} \qquad \text{mr/hr}$$

where

Q_v = energy emitted per unit volume of core
A = area of beam hole = 180 cm^2
μ_s = absolute coefficient of core = 0.07 cm^{-1}
a = length of beam hole = 475 cm
μ = absolute coefficient of lead = 0.46 cm^{-1}
x = thickness of radiation door = 12 in.

Thus

$$I = \frac{(1.9 \times 10^{-3})(2.9 \times 10^{12})180}{4\pi(0.07)(475)^2} e^{-14} = 5 \times 10^6(0.9 \times 10^{-6}) = 4.5 \text{ mr/hr}$$

Although this intensity is one half tolerance, the decay of fission products reduces the value to one tenth tolerance at 1 hr after shutdown.

In addition to affording protection after shutdown, the lead shielding door can be used in conjunction with a relatively simple neutron shielding plug during operation of the reactor to provide additional flexibility to the experimental facilities.

Shielding Requirements of External Facilities.[58,59] 1. External Water System. The activity of the water in the external system due to the neutron absorption of dissolved minerals reaches an equilibrium level which depends on the time of activation in the core, the amount of purge, and the recycle time. Based on the operating conditions listed below, the average activity of the water in the external system will be about 3700 γ rays/cc-sec. These have an average energy of 2 Mev.

2. Operating Conditions. The following operating conditions were used:

Power level	30 mw
Flow rate	20,000 gpm
Purge	50 gpm
Cycle time	1000 sec
Average decay time	500 sec
Water activity	7400 Mev/cc-sec

The shielding of the working reservoir and associated pipes is accomplished by first installing a fence 15 ft from the pipes, and then shielding the pipes to a height of 20 ft with 10- or 12-in. concrete blocks and shielding a portion of the reservoir itself with 2 in. of iron. Considering that only two of the 24-in. pipes will be filled with water at any one time, the γ-ray intensity adjacent to the concrete blocks will be 10 mr/hr and outside the fence 1 mr/hr. On the reservoir platform with the water shielded by 2½ in. of iron, the γ-ray intensity will be about 5 mr/hr.

3. External Air System. The activity of the pile-cooling air is due mainly to A^{41} with minor contributions from N^{16} and O^{19}. The physical and nuclear properties of these gases are listed below.

ELEMENT	REACTION	ABUNDANCE IN AIR (%)	σ_a	$t_{1/2}$	E_γ (Mev)
Nitrogen	$N^{15}(n,\gamma)N^{16}$	0.30	0.02 mb	7.4 sec	6.5
Oxygen	$O^{18}(n,\gamma)O^{19}$	0.04	0.2 mb	29.4 sec	1.6
Argon	$A^{40}(n,\gamma)A^{41}$	0.94	0.62 b	110 min	1.3

At 150°F and 25.5 in. Hg, 1 cu ft of air contains 3.1×10^{21} atoms of N^{15}, 4.2×10^{20} atoms of O^{18} and 4.9×10^{21} atoms of A^{40}. At 60 mw the average thermal-neutron flux in the air within the reactor is 4×10^{12} neutrons/cm^2-sec and the total volume of air in the reactor is about 850 cu ft. At 30,000 cfm the exposure time of the air in the reactor is about 2 sec. The number of atoms of A^{41} formed per second per cubic foot is

$$(4 \times 10^{12})\ (4.9 \times 10^{21})(0.62 \times 10^{-24}) = 1.2 \times 10^{10}$$

and the disintegration energy per cubic foot will be

$$(1.2 \times 10^{10})\ (2)\ (1.3)\frac{0.693}{6600} = 3.3 \times 10^{6} \text{ Mev/cu ft-sec}$$

The disintegration energy due to O^{19} is

$$(4 \times 10^{12})\ (4.2 \times 10^{20})\ (0.2 \times 10^{-27})\ (2)\ (1.6)\frac{0.693}{29.4} = 2.6 \times 10^{4} \text{ Mev/cu ft-sec}$$

The disintegration energy due to N^{16} is calculated similarly to be 3×10^{5} Mev/cu ft-sec. The shielding required to reduce the γ intensities to desired tolerances is summarized in Chap. 8, Table 8.1.C.

Shielding Requirements for Handling Activated Equipment and Materials.[56,60-64] The handling of equipment and materials which have been subjected to neutron irradiation constitutes one of the most important shielding considerations in the operation of a nuclear reactor. Each item presents a special problem and must be handled as such. The following paragraphs present general background for calculation of induced activities. For more detailed information on special problems, the listed references should be consulted.

1. Activities of Important Elements. The following table summarizes the elements which give rise to relatively high-energy γ-ray activity. Calculations are based on a flux of 10^{14} neutrons/cm^2-sec and irradiation to saturation (i.e., irradiation times long compared to half-life). For shorter irradiation times values should be multiplied by $(1 - e^{-\lambda T})$, where T is the irradiation time and λ the decay constant.

TABLE 4.6.D
Elements with High γ-Ray Activities

ELEMENT	ACTIVE ISOTOPE	HALF-LIFE	(curies/g)	γ-RAY ENERGY (Mev)
Sodium	$_{11}Na^{23}$	14.8 hr	32	1.38, 2.76
Magnesium	$_{12}Mg^{26}$	10.2 min	0.6	0.84 (100%), 1.01 (20%)
Aluminum	$_{13}Al^{27}$	2.4 min	13	1.80
Titanium	$_{22}Ti^{50}$	72 days	0.071	1.0
Vanadium	$_{23}V^{51}$	3.8 min	140	1.5
Chromium	$_{24}Cr^{50}$	26.5 days	15	0.32
Manganese	$_{25}Mn^{56}$	2.59 hr	390	0.82 (100%), 1.77 (30%)
Iron	$_{26}Fe^{58}$	46 days	0.029	1.10 (50%), 1.30 (50%), 2.06 (20%)
Cobalt	$_{27}Co^{59}$	5.3 years	610	1.16, 1.32
		10.7 min	18	1.5 (10%)
Copper	$_{29}Cu^{63}$	12.8 hr	59	1.35 (2.5%)
		5 min	14	1.30
Zinc	$_{30}Zn^{64}$	250 days	6	1.14 (45%)
	$_{30}Zn^{68}$	13.8 hr	0.4	0.44

The induced activities of some important reactor materials have been measured in the Oak Ridge reactor. Data are summarized in Table 4.6.D for irradiations at a thermal flux of 10^{12} neutrons/cm^2-sec. At higher flux levels, the values may be increased proportionally as long as the ratio $nv\sigma/\lambda$ is small,

where

nv = thermal flux, neutrons/cm^2-sec.

σ = absorption cross-section of activated atom, cm^2/atom.

λ = decay constant of active atom, sec^{-1}.

When the cross-section of the active atom is greater than 1000 barns and the half-life greater than 50 days, the saturation activities are reduced by fluxes of the order of 10^{14} neutrons/cm^2-sec. Under ordinary conditions, however, the saturation activity is relatively unaffected.

TABLE 4.6.E

Induced Activity of Commercial Materials

MATERIAL	TIME IN REACTOR (hr)	LEAD ABSOLUTE COEFFICIENT (cm^{-1})	ACTIVITY[1] (photons/sec-g) AT 10^{12} FLUX			
			4 to 5 hr decay	10 hr decay	100 hr decay	1000 hr decay
GBF graphite	4400	0.62	1.5×10^4	1.2×10^4	9.0×10^2	$< 2 \times 10^2$
CS graphite	4400	0.62	4.2×10^4	3.6×10^4	1.5×10^4	1.1×10^4
C-18 graphite	15000	0.58	5.5×10^5	5.2×10^5	3.2×10^5	2.6×10^5
Beryllium	12000	0.58	6.9×10^6	3.8×10^6	1.5×10^6	1.1×10^6
2S aluminum	15000	0.57		1.4×10^7	5.9×10^5	3.4×10^5
Stainless steel						
Type 304	1000	0.59	3.2×10^8	1.05×10^8	5.0×10^7	2.8×10^7
Type 310	1000	0.57	9.7×10^8	2.7×10^8	6.2×10^7	3.9×10^7
Type 316	1000	0.61	9.7×10^8	2.7×10^8	4.9×10^7	2.9×10^7
Type 347	1000	0.56	8.5×10^8	2.3×10^8	5.4×10^7	3.3×10^7
Type 405	1000	0.57	2.8×10^7	9.5×10^7	3.5×10^7	1.8×10^7
Type 430	1000	0.62	2.6×10^8	8.0×10^7	3.6×10^7	1.8×10^7
Type 445	1000	0.58	4.5×10^8	1.35×10^8	4.8×10^7	2.2×10^7
Carpenter 20	1000	0.52	6.0×10^8	2.6×10^8	7.2×10^7	4.1×10^7
Concrete						
Brookhaven[2]	700	0.49	4.0×10^8	9.0×10^7	5.0×10^6	3.0×10^6
Ordinary[3]	700	0.55	9.1×10^7	5.3×10^7	1.8×10^6	4.7×10^5
Barytes[4]	700	0.51	4.3×10^7	1.9×10^7	8.3×10^6	2.0×10^6

(1) The ionization chamber was calibrated with Co^{60} of 1.2 Mev average photon energy.

(2) The Brookhaven cement contained 58.2% limonite, 29.1% portland cement, 12.7% H_2O.

(3) The ordinary concrete contained 56% rock, 25.5% sand, 10.4% portland cement, 8.1% H_2O.

(4) The barytes concrete contained 46% barytes coarse, 40% barytes fine, 9.6% portland cement, 4.4% H_2O.

4.7 REFERENCE REPORTS

(1) Greuling, E., *Theory of Water Tamped Water Boiler*, LA-399, September 27, 1945.

(2) Beck, D. K., Callihan, D., and Murray, R. L., *Critical Mass Studies, Part II*, K-126, January 23, 1948.

(3) *Technical Division Section II Monthly Reports*, 1947 and 1948.

(4) Kasper, S., *Water Flow in the MTR*, ORNL CF-50-6-102, June 15, 1947.

(5) Briggs, R. B., *Cooling of Graphite Reflector for MTR*, ORNL CF-50-3-102, March 20, 1950; *Temperature in Bottom Thermal Shield Proposed for MTR*, ORNL CF-50-1-45, January 10, 1950.

(6) Briggs, R. B., *Heat Production in Bottom Thermal Shield of MTR*, ORNL CF-49-12-1, December 1, 1949.

(7) Briggs, R. B., *Neutron Fluxes and Heat Production in Top and Side Thermal Shields of MTR*, ORNL CF-50-1-18, January 6, 1950; *Effect of Conduction of Heat from Graphite Reflector Upon Temperature in East Side Thermal Shield of MTR*, ORNL CF-50-7-125, July 24, 1950.

(8) Lane, J. A., *Cooling Requirements at Reduced Power Levels*, ORNL CF-50-4-17, April 3, 1950.

(9) Huffman, J. R., *Cooling After Shutdown*, ORNL CF-48-6-155, June 7, 1948.

(10) Way, K., and Wigner, E. P., *The Rate of Decay of Fission Products*, MonP-303, May 19, 1947; "The Rate of Decay of Fission Products," *Phys. Rev.* **73**, 1318 (June 1, 1948).

(11) Way, K., *Fission Product Poisoning, Lecture 16, Clinton Laboratories Training Program*, M-3690, April 14, 1947.

(12) Weinberg, A. M., *Estimate of the Shielding Requirements for the High Flux Pile*, ORNL CF-46-11-66, November 1, 1946.

(13) Evans, R. D., "Radioactivity Units and Standards," *Nucleonics*, Vol. 1, No. 2, pp. 32-43, October 1947.

(14) Tirpak, E. G., *Report on the Use of Barytes Aggregates in Concrete for Shielding Purposes*, ORNL-667, April 13, 1950.

(15) Burnett, T. H. J., *High Density Concrete Shielding Test*, ORNL CF-49-12-75, December 19, 1949.

(16) Burnett, T. H. J., *Subsequent Tests - MTR Shield Efficiency*, ORNL CF-50-8-183, March 29, 1950.

(17) Podgor, S., *Neutron Relaxation Length in Barytes Concrete*, ORNL CF-50-4-54, April 13, 1950.

(18) Lansing, N. F., *Letter and Attachment re Barytes Cement by M. Greenhill to C. F. Knesel*, ORNL CF-50-9-54, September 15, 1950.

(19) Blizard, E. P., and Clifford, C. E., *Measurements of Iron and Borated Water Shield in the Lid Tank - Experiment 10,* ORNL CF-50-12-47, December 14, 1950.

(20) Blizard, E. P., *Reactor Shielding with an Iron Aggregate Concrete, Comparison with Ordinary Concrete,* ORNL-209, March 16, 1949.

(21) Briggs, R. B., *Heat Production in the Bottom Thermal Shield of the Materials Testing Reactor,* ORNL-CF-49-12-1, December 1, 1949.

(22) Briggs, R. B., *Neutron Fluxes and Heat Production in the Top and Side Thermal Shields of the MTR,* ORNL CF-50-1-18, January 6, 1950.

(23) Rockwell, T., and Kitzes, A. S., *Theoretical and Practical Aspects of Shielding,* ORNL-710, pp. 272-292, September 29, 1950.

(24) Briggs, R. B., *Comparison of Design Neutron Fluxes and Heat Production in the Graphite Reflector and Thermal Shield of the Materials Testing Reactor with Values Measured in the MTR Mock-Up,* ORNL CF-50-7-86, July 20, 1950.

(25) Beall, S. E., *Reactor Physics Experiments in the MTR Mock-Up,* ORNL-972 (to be issued).

(26) Lansing, N. F., *Approximate Analysis by E. P. Blizard of Experiment to Measure Neutron Penetration of the Thermal Shield,* ORNL CF-51-2-31, February 2, 1951.

(27) Lane, J. A., *Top Plug Shielding Calculations,* ORNL CF-48-8-305, August, 18, 1948.

(28) Lane, J. A., *Shielding Requirements for the Top and Bottom Plugs,* ORNL CF-50-7-7, July 17, 1950.

(29) Lansing, N. F., *Thickness of Door Under Bottom Plug,* ORNL CF-50-6-25, June 2, 1950.

(30) Thornton, G., *MTR Shield Survey Report No. 2,* ORNL CF-49-10-184, October 19, 1949.

(31) Thornton, G., *MTR Shield Survey Report No. 3,* ORNL CF-49-12-18, December 5, 1949.

(32) Clifford, C. E., and Mauney, T. H., *Gamma Attenuation Measurements Through Water in the MTR Mock-Up,* ORNL CF-50-8-85, November 3, 1950.

(33) Hamermesh, B., *Neutron Capture Gamma Ray Spectra,* ANL-4447, May 1, 1950.

(34) Smith, N. M., *Shielding of the External Water Pipes in the High Pressure Water Pile,* ORNL CF-48-3-264, March 4, 1948.

(35) Smith, N. M., *Is Shielding of Sub-Pile Room from Pile Water Activity Adequate?* ORNL CF-49-1-238, January 18, 1949.

(36) Noderer, L. C., *Shielding of Water Inlet Pipes,* ORNL CF-49-6-200, June 10, 1949.

(37) Lane, J. A., *Calculation of Pile Coolant Activities*, ORNL CF-49-7-240, July 26, 1949.

(38) Lane, J. A., *Water Monitoring Shielding*, ORNL CF-50-3-86, March 17, 1950.

(39) Farmer, W. S., *Activities in Process Water*, ORNL CF-47-4-115, April 7, 1947.

(40) Lane, J. A., *Calculation of Pile Coolant Activities*, ORNL CF-49-7-240, July 26, 1949.

(41) Noderer, L. C., *Shielding of Water Inlet Pipes*, ORNL CF-49-6-200, June 10, 1949.

(42) Lennox, D. H., *Process Water Activity*, ANL-EKF-44, March 8, 1950.

(43) Lane, J. A., *Activity of Process Water from Exposure of Core Material*, ORNL CF-49-10-186, October 21, 1949.

(44) Persiani, P. J., *Activity of the Process Water Effluent*, ANL-EKF-56, July 13, 1950.

(45) Noderer, L. C., and Coveyou, R., *Thermal Column Neutron Flux*, ORNL CF-47-9-305, September 3, 1947.

(46) Lansing, N. F., *Thermal Neutron Flux Calculations*, ORNL CF-49-11-167, November 16, 1949.

(47) Lane, J. A., *Thermal Column Shielding Requirements*, ORNL CF-50-6-20, June 3, 1950.

(48) Thomas, T. H., *MTR Report on Thermal Column*, ORNL CF-50-2-28, June 16, 1950.

(49) Smith, N. M. and Whitcombe, D., *Is Leakage of Radiation Out of Air Intake Labyrinth Excessive?* ORNL CF-49-4-86, April 7, 1949.

(50) Lane, J. A., *Neutrons Streaming Through Pebble Discharge Chute*, ORNL CF-50-1-157, January 30, 1950.

(51) Lane, J. A., *Shielding Neutron Curtain Slot*, ORNL CF-50-7-14, July 6, 1950.

(52) Rockwell, T., and Kitzes, A. S., *Theoretical and Practical Aspects of Shielding*, ORNL-710, September 29, 1950.

(53) Persiani, P. J., *Shielding of Horizontal Beam Hole Plug*, ANL-EKF-8, October 12, 1949.

(54) Krisberg, N. L., *Calculations on Plug Design*, ANL-EKF-21, September 23, 1949.

(55) Lane, J. A., *Required Thickness of Vertical Graphite Hole Plugs*, ORNL CF-50-4-16, April 3, 1950.

(56) Persiani, P. J., *Shielding of Plugs During Transfer into Coffins*, ANL-EKF-9, October 13, 1949.

(57) Stone, R. S., *Health, Radiation, and Protection*, CH-630, May 7, 1943.

(58) Krisberg, N. L., *Memo on Shielding Requirements of the Reservoir and Associated Pipes*, ANL-EKF-23, December 1, 1949; Krisberg, N. L., *Shielding Calculations for the Working Reservoir and Associated Pipes*, ANL-EKF-24, December 7, 1949.

(59) Leyse, C. F., *Shielding of External Reactor Air System*, ANL-EKF-32, January 26, 1950.

(60) Persiani, P. J., *Shielding of Removable Beryllium Assemblies*, ANL-EKF-10, October 14, 1949.

(61) Lennox, D., *Fuel Assembly Coffin*, ANL-EKF-38, February 9, 1950.

(62) Persiani, P. J., *Calculation of Induced Activities in Commercial Materials*, ANL-EKF-7, October 11, 1949.

(63) Zora, V., *Water Shield Requirements for the MTR Canal*, Blaw-Knox Report No. A-333-3-S, April 21, 1950.

(64) Wilson, I. L., *Some Data on Pile Irradiations*, CRE-414, March, 1949.

(65) Glasstone, S., and Edlund, M. C., *The Elements of Nuclear Reactor Theory*, Parts II and III, TID 385 and 386, November, 1950.

Chapter 5

CONTROL SYSTEM

5.1 INTRODUCTION

The preceding three chapters of the Handbook have described the reactor, its use, and the physics of its design. In this chapter the reactor control system and some of the philosophy behind it will be discussed. Like that of the rest of the MTR, the development of the controls has gone on over the last five years; therefore no separate historical development is attempted.

The main portion of the chapter is devoted to a description of the control instruments and system as they now exist in the MTR. While this description inevitably contains some of the history and philosophy of the controls, a separate section is included at the end to discuss some of the reasons for using the present control system.

5.1.1 Review of Requirements. It has been shown in Chap. 4 that the k of the MTR is very much larger than that of the early uranium-graphite reactors and that considerable excess reactivity will be used in order to handle losses due to fuel depletion, experiments, fission product poisons, etc. Any control system designed for such a reactor not only must be able to maintain the machine at any given power but, when necessary, must also be able to overcome quickly all the excess reactivity.

The speed with which the controls must act depends upon the maximum rate at which the reactor can rise in power. Suppose that in a clean, cold reactor some mishap allows the rods to be withdrawn at their maximum rate; as an example, assume this rate to be equivalent to a $\Delta k/k \approx 0.1\%$ per second. In the first few minutes the neutron level will rise only by a factor of $\sim$100, but at the end of this time the reactor will be supercritical and on a rising period of approximately 10 sec. In a few more seconds the period will be approximately 1 sec. It has been calculated[1] that the minimum period expected before the power goes above normal operation level will be about 1/30 sec. Such a period must be countered by safeties capable of a 30-msec response. Even with this speed of response the power would momentarily rise to about three times "normal" overload power or to about four times operating power.

From the above paragraph it is obvious that the control rods must not be withdrawn too rapidly, but another condition is imposed in restarting the reactor after a short shutdown. In this case the time available is limited by xenon growth (see Chap. 4); hence the rods must be withdrawn as quickly as possible. In order to fulfill both these conditions, the control system has been designed to limit the "high" rate of rod withdrawal to an equivalent $\Delta k/k$ of 0.1% per second.

The above paragraphs briefly review the main dynamic requirements of the control system. The control system described in the following sections is designed to fulfill these requirements and provide a means of maintaining the reactor at any given power level.

5.1.2 General Features of the MTR Control System. A block diagram, showing the essential elements of the reactor control system, is given in Fig. 5.1.A. In this diagram the light lines indicate flow primarily of information, signal, or effect; the heavy lines indicate flow primarily of energy. It is understood that this diagram shows only the major relationships among the control system elements.

The reactor is shown to be subject to effects of the control rods, auxiliary facilities, and certain disturbances. The reactor in turn affects certain instruments which produce information to be transmitted to the operator and to the control system. The operator and the control system also receive information from selsyns and other indicators of rod position or rod motion. On the basis of the information received, taken together with the operator's actions or instructions, the control system transmits to the motors or magnets (also called "clutches") appropriate control signals. The motors or magnets then cause corresponding rod motions, which in turn affect the reactor. Thus the main control loop is a closed path, indicated in the diagram by light lines.

The heavy lines indicate the flow of energy from an external source to the control system to operate amplifiers, relays, etc., and to motors, magnets, and the auxiliary facilities to operate pumps, fans, etc. These are the principal power demands relevant to the control system. To isolate the control system from fluctuations and interruptions of external power an energy conversion and storage unit is provided. The status of this unit is reported by certain instruments to the operator, who can exert a limited degree of

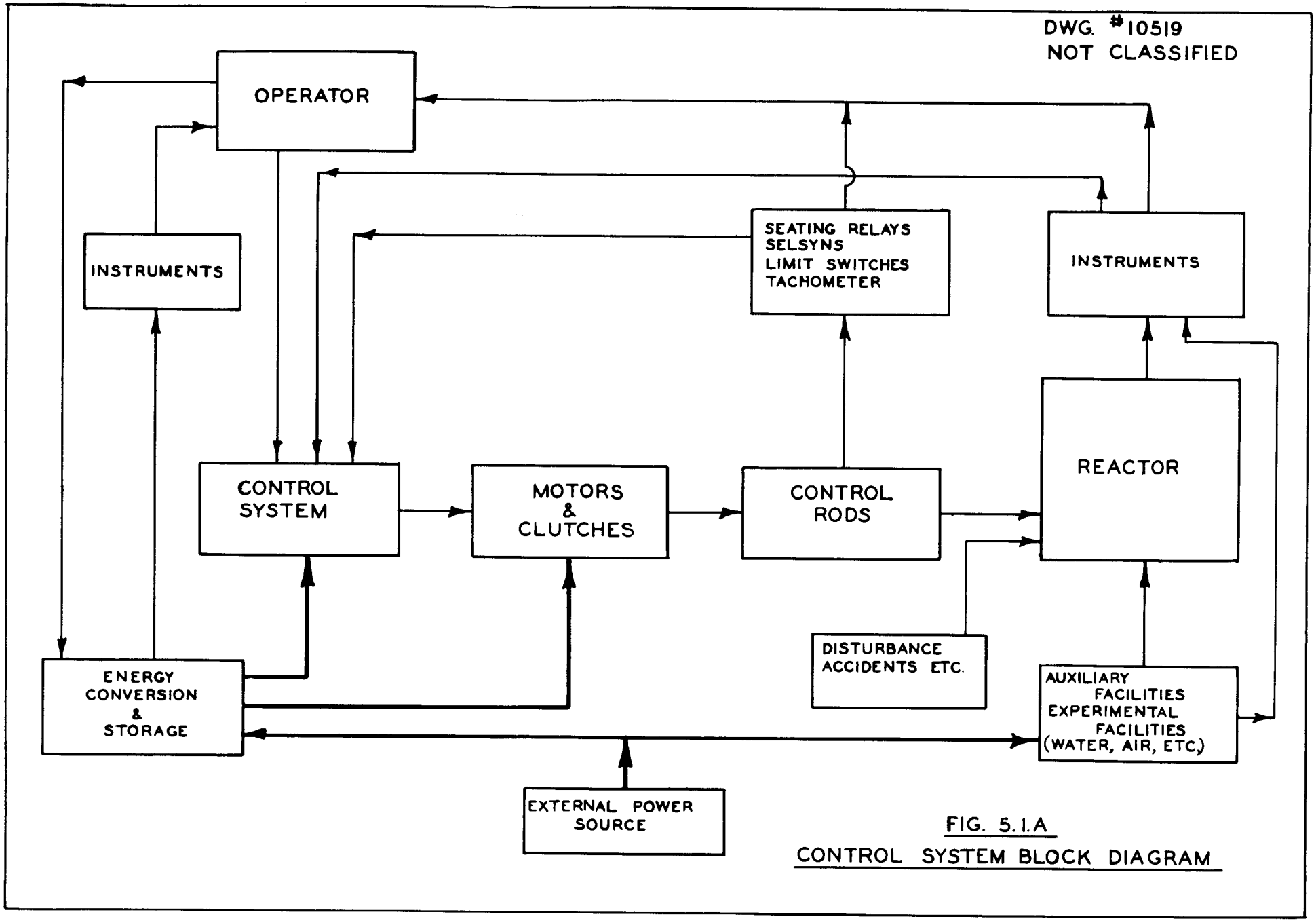

FIG. 5.1.A
CONTROL SYSTEM BLOCK DIAGRAM

control on it. Full discussions of the power distribution system and of the auxiliary facilities are given elsewhere (Chaps. 3, 6, 7, 8, and 10), but they are included here to the extent that they are interrelated with the control problem.

5.2 MEASURING INSTRUMENTS

There are three groups of instruments furnishing information to the operator and to the control system: (1) the reactor instruments measuring neutron flux or power level, (2) the rod position and motion indicators, and (3) the instruments for the auxiliary facilities and energy conversion and storage. These groups will be discussed in the order mentioned. The way in which the instrument signals are presented to the operator, recorded, or used in the control system will be discussed in later sections.

5.2.1 Reactor Instruments. It is necessary to draw a rather arbitrary line separating reactor instruments from instruments on the auxiliary facilities, particularly the cooling water. Reactor instruments will be understood to include radiation instruments measuring neutron level in the reactor and radioactivity in the water, temperature instruments measuring distribution of exit water temperature across the active lattice and temperatures in the thermal and biological shields, and pitot tubes measuring distribution of water flow across the bottom (exit) of the active lattice. (See Fig. 5.2-A).

The reactor radiation instruments are listed in Table 5.2.A. It will be noticed that with one exception these instruments are located in the reactor. The one exception, the water monitor chambers, can reasonably be included with the reactor instruments since they monitor water samples from the 37 sampling tubes distributed across the bottom of the active lattice.

The parallel circular plate (PCP) and compensated ionization chambers and the fission chamber are of ORNL design and manufacture. The air wall and water monitor chambers are made by General Electric Company, and the boron thermopiles are made by Nuclear Instrument and Chemical Corporation.

When the MTR was proposed in 1946, the best available ionization chamber had a useful range of about 10^4. The development of the compensated ionization chamber with useful range of better than 10^6 was the first step. Early

TABLE 5.2.A

Reactor Radiation Instruments

NAME OF INSTRUMENT	REFERENCE ITEM NO.	USE	REACTOR LOCATION
Parallel circular plate ionization chamber	650-1A, 2A, 3A	Safety	VN-1, 2, 3
	652-1A, 2A	Servo signal	VN-5, 6
Compensated ionization chamber	650-4A, 5A	Log N and period signal	HI-2, 3
	654-2A	Galvanometer signal	HI-2
Fission chamber, travel 12 ft	654-3A	Counting rate signal	VG-8
Air wall ionization chamber (G.E. No. 9737334G1)	650-11C, 11D	Water flow N^{16} monitoring	GM-1, 2
Water monitor ionization chamber (G.E. No. 9737814)	653-5A, 6A	Water sample monitoring	Monitoring room
Boron thermopiles		Neutron flux in graphite	VG-27, 28, 42, 44, 56

attempts to develop a $d(\log N)$ meter of the vibrating condenser type were unsuccessful and a $\log N$ and period meter based on the logarithmic characteristic of the diode proved to be highly satisfactory. This instrument, with a useful range of approximately 10^6, matching the compensated ionization chamber, has become extremely important to the control system.

In an early attempt to cover still lower neutron intensities, the modulated ionization chamber was proposed. This device utilized the periodic motion of an absorber placed before the ionization chamber which resulted in a modulated signal proportional to neutrons only. This was abandoned in favor of the fission chamber and counting rate meter which, by repositioning the fission chamber, is capable of covering a range of 10^{11}. Since this device has a long integrating time, it was felt that the resultant time delays would make it an unsatisfactory instrument for automatic control and it is therefore used as an adjunct to manual control.

[redacted] DWG. 10688

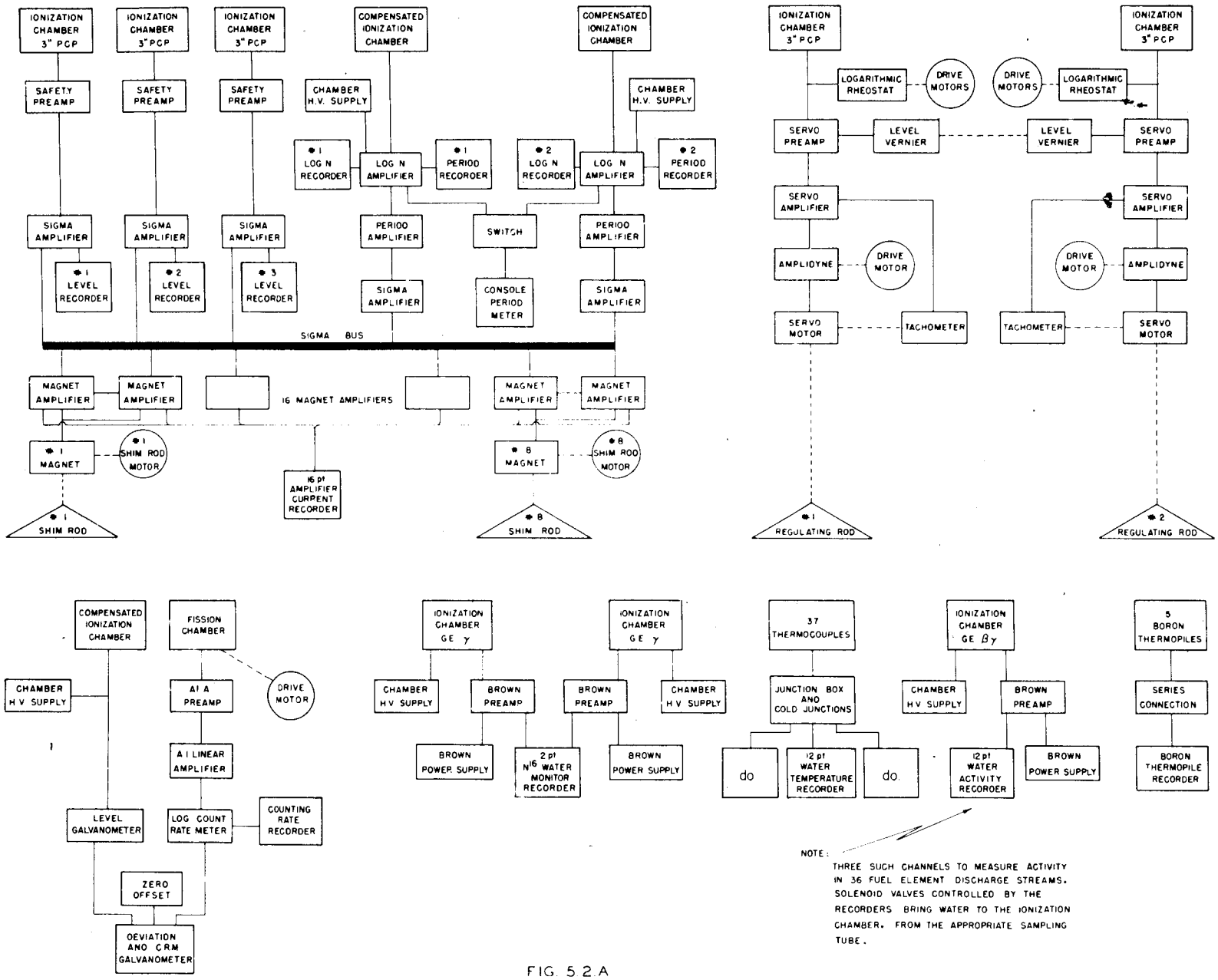

FIG. 5.2.A

MATERIALS TESTING REACTOR INSTRUMENTATION BLOCK DIAGRAM

The importance of having proper instruments for control purposes is made evident by consideration of Table 5.2.B, which shows the relation of power (or neutron) level considered in four definite ranges to the choice of instrument and control action. These ranges, as suggested by H. W. Newson[1] or as applied to the MTR, serve as convenient divisions of the entire range of reactor operation. At the lowest level is the *source range* which lies below

TABLE 5.2.B

Relation of Lower Level to Instruments[1]

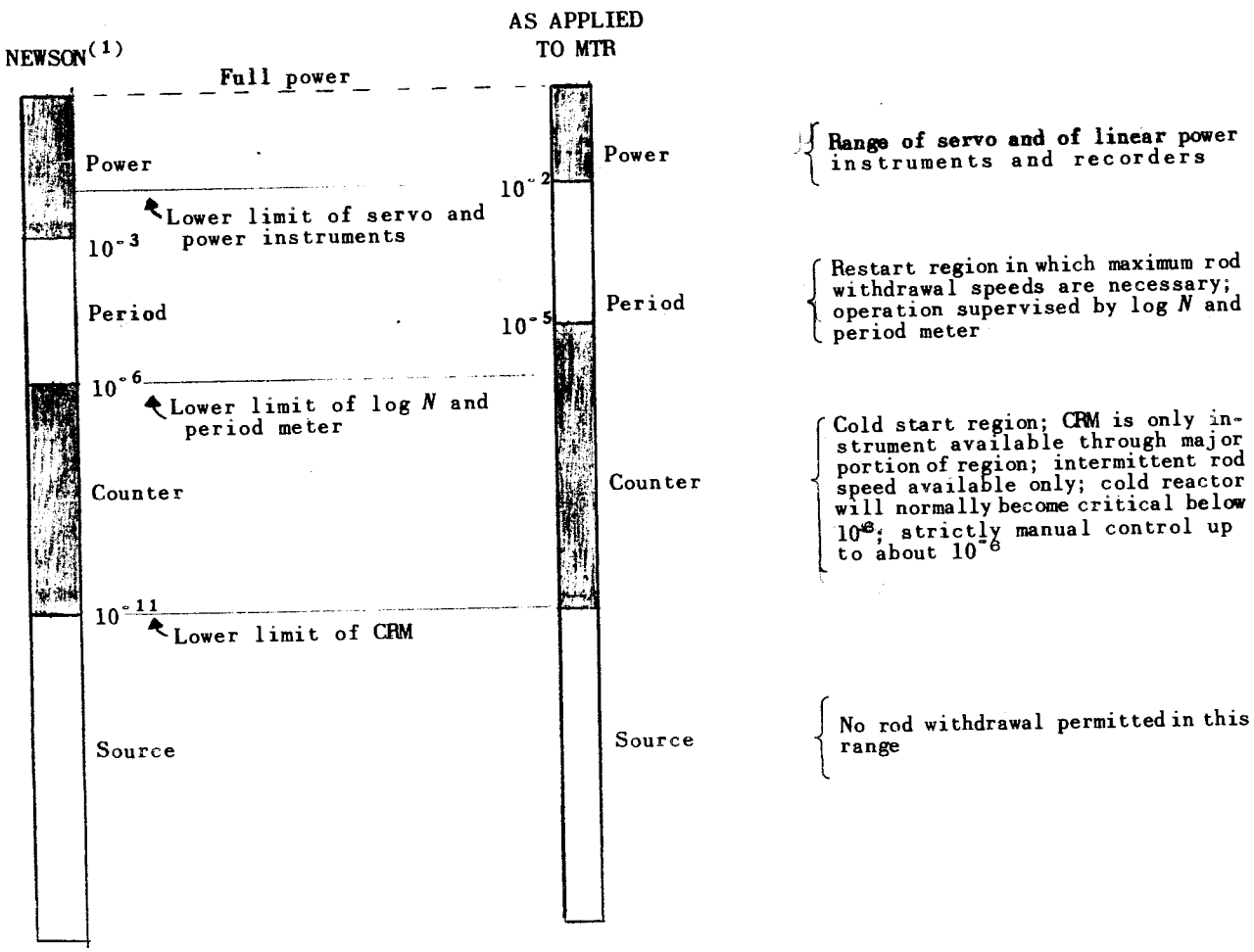

the range of the counting rate meter and in which rod withdrawal should be prohibited. Until the level is raised above 10^{-11} of full power by a suitable source (cf. Chap. 4), the Δk of the reactor should be kept negative; i.e., rods should not be withdrawn. Next comes the *counter range,* in which the fission chamber and counting rate meter combination is the source of a reliable signal. For the MTR only intermittent rod withdrawal is permitted in this range. The lower limit of the period meter makes the transition to the *period range.* By the time this range is reached, the cold, clean reactor will have become critical and the level will be rising on a stable period. Finally comes the *power range,* over which an appreciable fraction of full power may be measured.

PCP Chambers. The PCP chambers are designed, constructed, and located in the reactor so as to give high-speed response to changes in neutron flux coming from the core of the reactor. The construction is shown in Fig. 5.2.B. The active section consists of a set of graphite disks, each of which is coated on both sides with B^{10}. Alpha particles are emitted by the $B^{10}(n,\alpha)Li^7$ reaction when neutrons bombard these disks. These alpha particles cause the ionization which the chamber measures. Thickness of boron coating (0.3 mg/cm^2) on the graphite disks is chosen so as to give maximum ionization current (about 50 μamp at their operating flux of 10^{10} neutrons/cm^2-sec).

The chamber is made of materials (magnesium shell, graphite electrodes, quartz insulators) that do not become highly radioactive under neutron bombardment. Furthermore, the long body of graphite ending in a boron plastic plate at the base shields the connectors and cables from the high neutron flux. This makes handling and servicing of the chamber after it has been in the reactor permissible without elaborate shielding. The chambers cannot be located as near the reactor tank as would be desirable because of the high neutron flux. The next best thing seemed to be to locate the chambers in holes, looking directly toward the tank, with collimating boral sleeves ahead of the chamber to enhance their inherent directional sensitivity to flux directly from the tank. With this arrangement the major delay is the time, estimated at 5 to 10 msec, for neutrons to get from the core through the tank and into the graphite. Thus it is possible to provide a safety signal well within the 30-msec limit set by consideration of reactor kinetics. (A report on the PCP chamber is in progress.)

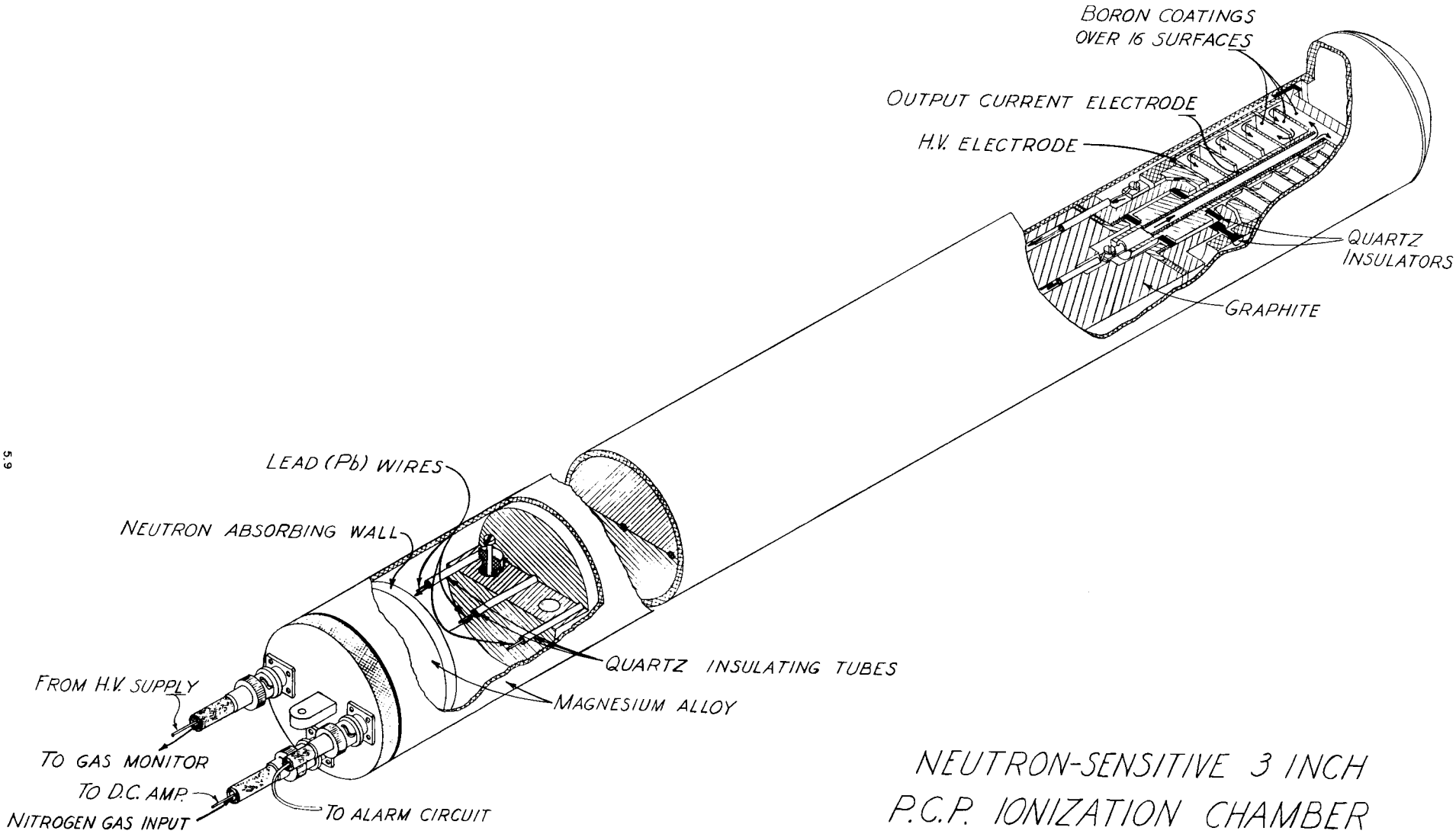

NEUTRON-SENSITIVE 3 INCH
P.C.P. IONIZATION CHAMBER
LENGTH- APPROX. 33 IN.

Q-975-7

FIG. 5.2.B

NOT CLASSIFIED

Compensated Ion Chamber. The compensated ionization chamber is designed to give reliable measurement of neutron flux over a large range, particularly in the presence of relatively intense gamma radiation. The construction, shown in Fig. 5.2.C, features two separate chamber volumes. The inner volume is contained between a movable cup electrode and a fixed inner electrode shell; the outer volume is between this inner shell and an outer electrode shell. The two volumes being approximately equal, the effects of gamma radiation on the two should also be equal. In addition, the outer volume is made sensitive to neutrons by B^{10} coatings applied to the electrode surfaces. Then if the cup electrode is at negative potential and the outer shell electrode at positive potential with respect to the inner shell, the net current carried by the inner shell will be a measure of neutrons alone. Close balancing of the two volumes for zero gamma signal is carried out by moving the cup electrode, thus varying the inner volume. As in the PCP's, the sensitive end of the chamber is made of low-activity materials (pure graphite electrodes, quartz insulators, lead wires, and magnesium shell) and the main body of the chamber is made long to provide shielding of the chamber base from neutrons. The preamplifier circuit used with PCP chambers is shown later in Fig. 5.3.A.

The compensated chamber is to be operated from 100-μamp current at full operating level (N_F) down to 10^{-4} μamp at the bottom of its range. The flux at the chamber when the reactor is at N_F is presumably somewhat over 10^{10}.

Fission Chamber. The fission chamber is designed to give neutron measurements at low flux levels. The construction, shown in Fig. 5.2.D, is quite simple. A brass shell carries a nickel liner with a coating of U^{235} on its inside surface. A central anode rod of graphite, ¼ in. in diameter, is supported on a coaxial connector. Neutrons absorbed in the U^{235} produce fission fragments which ionize the gas in the chamber. The voltage pulse thus created by each fission is amplified and counted. These fission pulses are large, and by proper biasing of the amplifier can be counted separately from the lesser currents due to alpha or gamma radiation; i.e., neutron flux can be accurately measured even in the presence of intense gamma radiation. With the anode at +270 volts, the fission pulse height is some 50 μv across the 450 $\mu\mu$f of cable capacitance. The chamber efficiency is one pulse in a flux of 100 neutrons/cm^2-sec. By using argon gas a short, sharp pulse may be obtained. However, the chamber performance is then very sensitive to gas

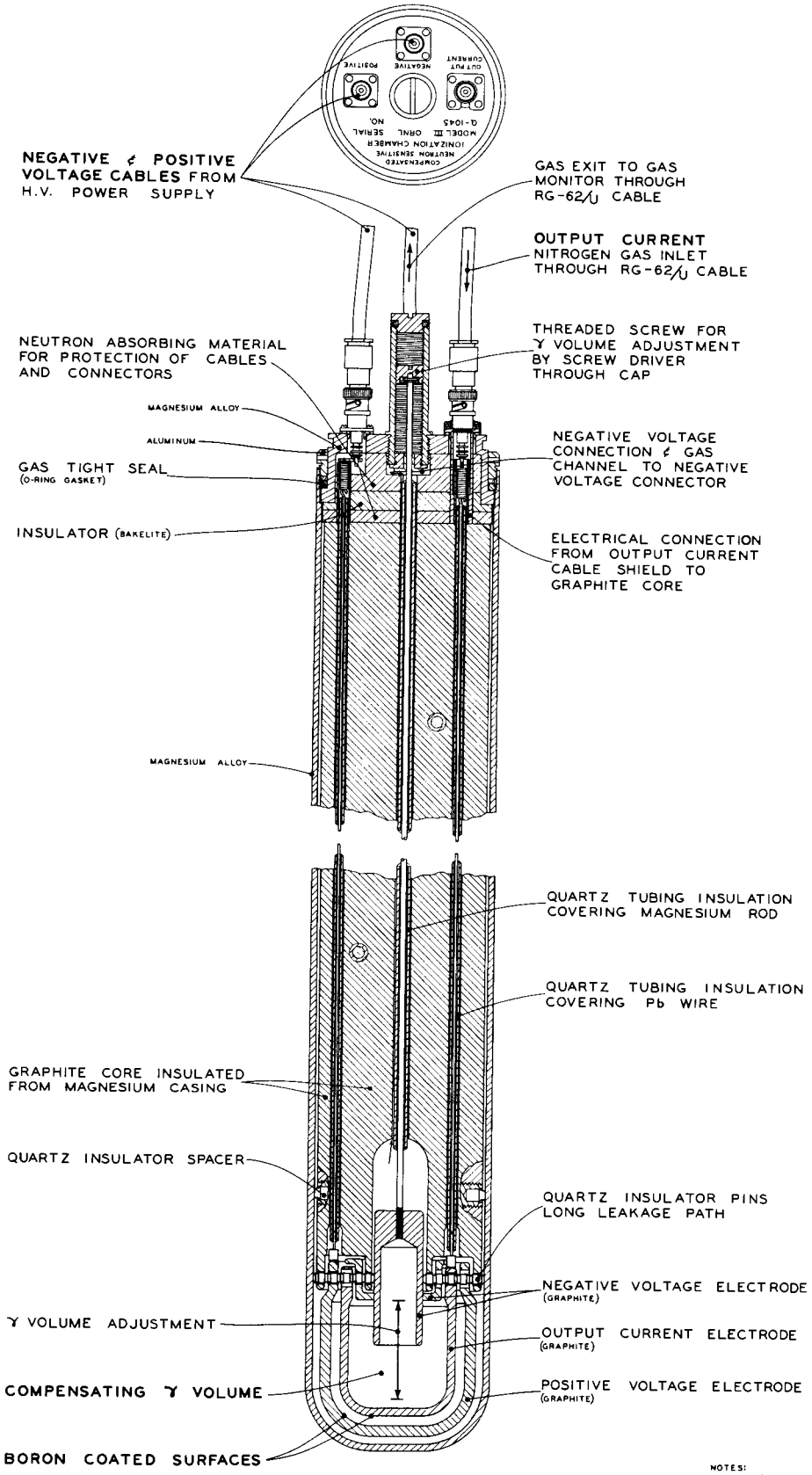

NOTES:
ARROWS (⟶) INDICATE NORMAL PATH OF GAS FLOW
OUTSIDE DIAMETER OF CHAMBER 3-3/4"
APPROXIMATE LENGTH OF CHAMBER 36"

FIG. 5.2.C

COMPENSATED IONIZATION CHAMBER NEUTRON SENSITIVE

ORNL Q-1045

Q-1045-10

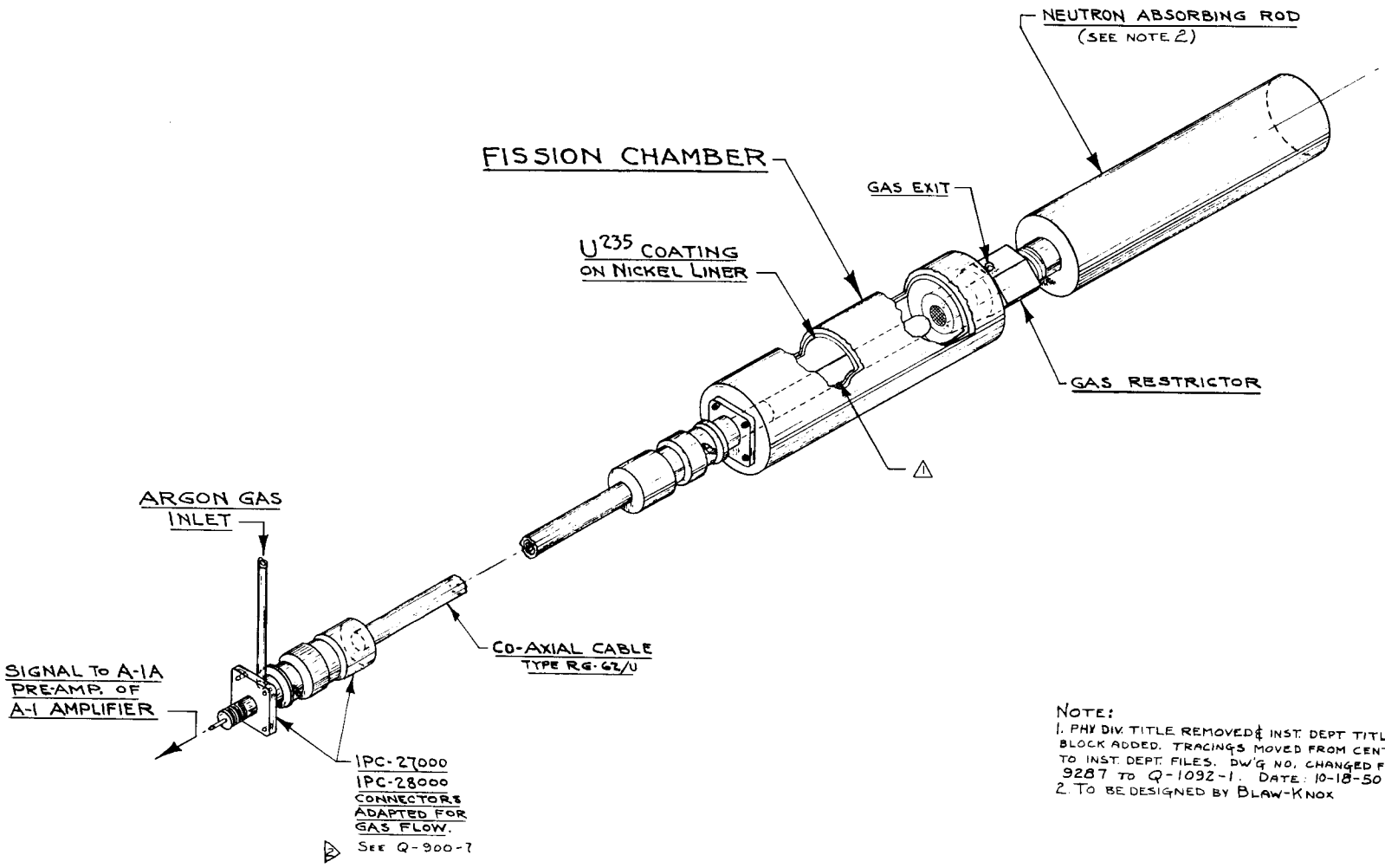

NOTE:
1. PHY DIV. TITLE REMOVED & INST. DEPT TITLE BLOCK ADDED. TRACINGS MOVED FROM CENT. FILES TO INST. DEPT. FILES. DW'G NO. CHANGED FROM 9287 TO Q-1092-1. DATE: 10-18-50
2. TO BE DESIGNED BY BLAW-KNOX

DESIGNED BY ORNL PHYSICS DIVISION

REVISIONS			
DATE	CODE	CHANGE	CHK.
10-18-50	1	ELECTRODE CHANGED	
10-19-50	2	SEE Q-900-7, P.O. ADDED	

LIMITS OR DIMENSIONS UNLESS OTHERWISE SPECIFIED
FRACTIONS ±
DECIMALS ±
ANGLES ±

FIRST USED
DESIGNED J.C. GUNDLACH
DRAWN BY E. ANDREWS
STARTED
FINISHED MAY 1950
CHECKED
APPROVED

OAK RIDGE NATIONAL LABORATORY
INSTRUMENT DEPARTMENT

FISSION CHAMBER ASSEMBLY

SCALE NONE | Q-1092-1 | C

FIG. 5.2.D

BLAW-KNOX CO. NO 654-3a

NOT CLASSIFIED
PER [illegible]

impurities and to supply voltage, to minimize these difficulties the argon is deliberately mixed with about 5% carbon dioxide. Under these conditions, pulses are distinguishable up to a limiting rate of nearly a million per second. The lower pulse rate limit is set by background, which, aside from electrical pick-up noise, is the negligible (1 count per hour) spontaneous fission occurring in U^{238}. The counting-rate meter used with the fission chamber, however, has a useful range from 1 to 10^4 counts per second, and this is therefore the working counting range of the complete instrument.

To increase the neutron flux range of the instrument provision is made for moving the chamber over a maximum distance of 12 ft, from outside the thermal shield to a point well inside it. This travel corresponds to an estimated neutron flux variation of 10^7. At the innermost position the minimum flux to be expected (say from a source at start up of a clean reactor) would be about 10^3, corresponding to 10 counts per second. The maximum flux (reactor at N_F) at the inner position would be 10^{13}, and at the outer position about 10^6, corresponding to 10^4 counts per second, the upper limit of the rate meter. In view of this range the fission chamber will be used at three established positions in its instrument hole, motion from one to the other giving a neutron flux range multiplication of about 3×10^3, which is comfortably within the counting rate range of 10^4. Means of moving the chamber are semiautomatic and are tied in with the control circuitry to be discussed later. The exact locations of the three operating positions must be considered a part of installation-calibration procedure. Also entering into the calibration is the neutron absorbing rod shown in Fig. 5.2 D. Besides plugging the hole in which the fission chamber moves, this rod furnishes, in choice of dimensions and materials, further means of achieving desired chamber sensitivities in the three locations.

The three types of ionization chambers discussed thus far (PCP, compensated, and fission chambers) have in common the property of being open chambers with continuously flowing gas. The nitrogen used in the PCP and compensated chambers is fed in through the signal cables and returned through power supply cables, being monitored (for flow rate) on the end of the return cable. The mixture of argon and carbon dioxide used in the fission chamber is fed in through the only cable going to this instrument and then is vented as indicated in Fig. 5.2 D. The decision to use continuously purged gas in these chambers was based largely on the expectation of less trouble in assembly, operation, and maintenance of the instruments. A somewhat incidental advantage is that the gas flow keeps the signal cables free of moisture.

Air-wall Ionization Chamber. The air-wall ionization chamber (G.E. No. 9737334G1) is used to measure the energetic 7-sec gamma activity of N^{16} formed in the $O^{16}(n,p)N^{16}$ process by neutron bombardment of the cooling water. The chambers are located in thimbles in the outlet flow. This signal should constitute a good overall measure of the average reactor core flux. The chamber is 5 in. in diameter by 19 in. long, with cylindrical electrodes. The name "air-wall" signifies that it is made of materials having nearly the same atomic number as air, and hence giving similar scattering. Sensitivity is 5×10^{-12} amp in a gamma ray intensity of 12.5 mr/hr.

Water Monitor Chambers. The water monitor chambers (G.E. No. 9737814) are used in the monitoring room to measure beta and gamma activity in the water drawn through the 37 sampling tubes from the exit face of the active lattice. Thus the distribution of radioactivity in the water flow through the lattice can be observed. Water from each of the 37 tubes is examined every 2 min by an automatic cycling device. The water is held up long enough for the N^{16} activity to become small, so the observed activity is either that induced by the flux in the demineralized cooling water or else it is evidence of a fission break (rupture of fuel element) in the core. Sensitivity of this chamber is 3×10^{-13} amp for 12.5 mr/hr.

Boron Thermopiles. The boron thermopiles are used for an additional check on neutron flux level. They are located in the graphite (VG-27, 28, 42, 44, 56; see Fig. 3.F) all at the same horizontal level. These instruments consist of a large number of thermocouple junctions in series, with alternate junctions coated with boron. The coated junctions become warm owing to absorption of neutrons, thus yielding a net voltage which is a measure of neutron flux. The instrument case is about ½ in. in diameter by 6 in. long. The approximate sensitivity is 6 mv in a flux of 10^{12}. Internal resistance is of the order of 3 to 4 ohms. By proper mounting and thermal insulation of the thermocouples the instruments may be made quite insensitive to ambient temperature (say, 40 μv/°C). For transient conditions the time constant is about 1 sec.

Other Instruments. In addition to the foregoing reactor instruments, all of which measure radiation, there are various temperature and water flow measurements to be mentioned. Each of the 37 sampling tubes is actually part of a triple-function assembly: sampling tube, pitot tube for flow measurement, and thermocouple for water temperature measurement. Knowledge of distribution of water flow velocity and temperature is of obvious value. There

are also numerous thermometric devices used for observing temperatures in other parts of the reactor. Most important of these, from the control standpoint, is the pair of thermocouples in the inlet and outlet water lines, measuring the temperature rise which is then multiplied by total water flow to give power absorbed from the reactor. A venturi flow meter feeds signal to a flow recorder, and the thermocouples feed a differential temperature recorder. Impedances in these recorders are connected in a bridge circuit in such a way that the bridge output is proportional to the product of the two signals. The detector for this bridge is thus the power level recorder.

In the thermal and biological shields there are about fifty positions for thermocouples (see Chap. 2). The signals from these instruments, however, tie into the control of the reactor only through the one annunciator channel reserved for them.

5.2.2 Rod Position and Motion Indicators. Instantaneous positions of all control rods are reported to the operator by selsyns. The generators (transmitters), mounted on the rod drive shafts, are Ford Instrument Company "Telesyn," type 3HG. The motors (receivers), mounted on the control room console, are the same brand, type IF. In addition, the positions of the rods with respect to certain fixed positions are detected by means of lever-operated microswitches. These limit-switch signals go to the control system and to the operator. The shim-safety rods operate two limit switches (see Fig. 5.2.E). The upper switch operates when the rod is withdrawn about 30 in. from the fully inserted position. (The exact location of this limit position is to be adjusted in the field so as to take account of two factors: the actual maximum withdrawal mechanically possible, and the need for keeping some sensitivity of safety rod action.) The lower limit switch is a "back-up" switch whose action would usually be forestalled by action of the other shim rod switches, the clutch (magnet) switch and the seat switch. If the rod is engaged in its holder so the clutch switch is closed, the seat switch would operate to stop the motors when the rod is fully inserted. If the rod has been released (e.g., by safety action) and is resting on the bottom, then the clutch switch would operate to stop the motors as the holder comes into place. Thus the lower limit switch would act only if the rod were not in the reactor or if the clutch or seat switches failed.

The seat switches are mercoid pressure switches which operate on the water pressure change caused by seating of the rod and subsequent reduction of

DWG. # 10546
NOT CLASSIFIED

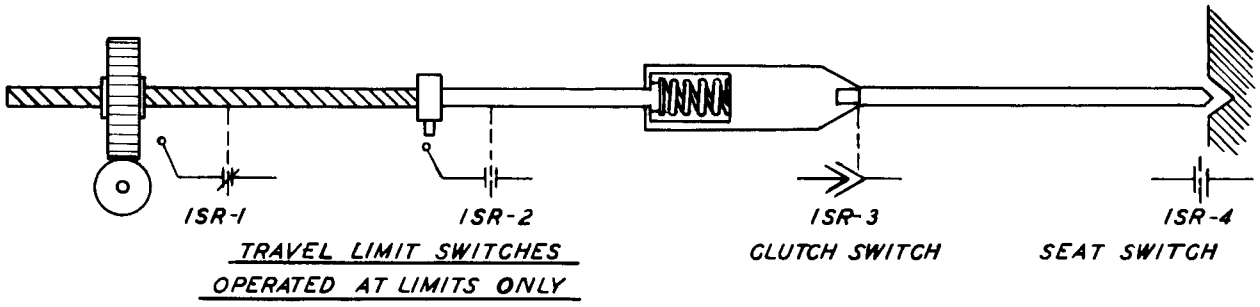

FIG. 5.2.E
SHIM ROD LIMIT SWITCHES

the incoming flow of demineralized water (partial make-up for the process cooling water). The clutch switch operates between the shim rod itself (which is grounded) and the magnet pole faces, which are insulated from ground; this circuit uses 12 volts alternating current.

The regulating rods are equipped with six limit switches (see Fig. 5.2.F). Of these, the two at the extreme positions serve to limit the travel of the regulating rod itself, while the intervening four enter into shim rod control. The regulating rod motion is held in both directions against shock absorbers. The servo motor torque is reduced by the action of the end limit switches to a value which keeps a light load on the shock absorber in the limited direction while leaving the system free to give full instantaneous torque in the opposite direction.

Instantaneous velocity of regulating rods is measured by tachometers mounted on the motor shafts. The Weston Model 724, type A, is used. The instrument has a sensitivity of 50 volts per 1000 rpm and an upper limit of 2000 rpm.

5.2.3 Auxiliary Facilities Instruments. In describing the general scope of the control problem in Section 5.1.1, reference was made to certain auxiliary facilities which are of some concern to the operator and therefore need a place in the control picture. It is, of course, possible that any conceivable detail of associated equipment, however remote, might under some circumstance be of concern to the operator. (This is one reason for having a telephone near the operator.) It seems reasonable to confine attention here to the three vital facilities: process water, cooling air, and control power. Since the instrumentation of these facilities is more or less fully discussed elsewhere (Chaps. 7, 8, and 10), only brief comment on the immediate relevance to control is needed here.

The process water which cools the reactor is perhaps the most important auxiliary facility. Undue changes in temperature or flow of this water can result in just as serious damage to the reactor as undue changes in neutron level. The radiation hazard to personnel is not so great, however, and, because of this and for other reasons, the water instrumentation works with considerably thinner safety margin than is designed into the radiation instrumentation. In particular, the principle of backing up every instrument with an alternative instrument is less thoroughly applied. Water level in the

DWG. #10547
NOT CLASSIFIED

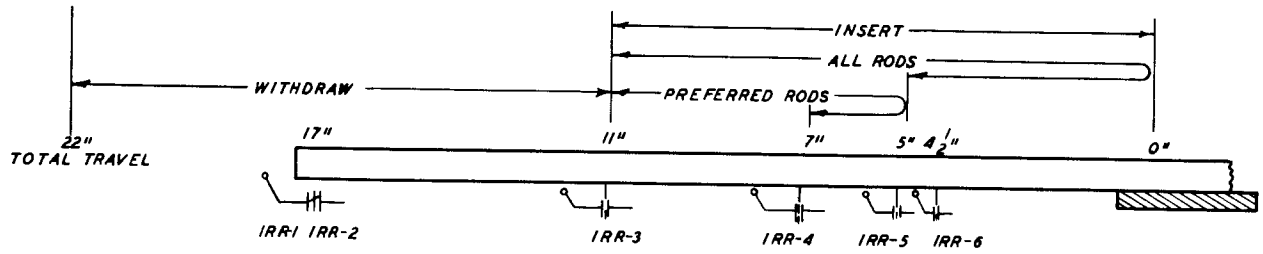

FIG. 5.2.F

REGULATING ROD LIMIT SWITCHES

main tank, or "working reservoir," is guarded with automatic safety actions (see Section 5.5.1, especially Table 5.5.A). The same is true for water flow although this depends on a single flow meter. The water system is provided with sundry alarms and recorders, which need not be detailed here. Most of these will engage the attention of personnel stationed in the process-water control and instrument center and will receive only marginal attention in the reactor control room.

So far as cooling air is concerned, the operator is warned by alarms on pressure and flow of air and also on radioactivity in the air stack. Air flow failure causes a mild automatic safety action (slow setback; see Table 5.5.A).

In order that reactor operation may be as free as possible from the effects of transient disturbances or outages on the purchased-power lines, electrical power for the control system is obtained from a special supply, labeled "Energy Conversion and Storage" in Fig. 5.1.A. This supply consists of two alternators operated from storage batteries. In normal operation one alternator would supply "instrument bus voltage" and the other alternator would supply "relay bus voltage."

The instrument bus furnishes power to those instruments most sensitive to disturbance while the relay bus (also called the "control bus") furnishes power to the less sensitive components, such as relays and motors, which not only are less sensitive to disturbance but are themselves actual sources of disturbance. If one of the alternator supplies breaks down or otherwise becomes unavailable, the relay bus would be switched to purchased power. To permit operation with the "rougher" purchased power, the relay circuits include a 2-sec timer and a number of time delay relays so that reactor shutdown does not ensue unless the relay bus voltage is off for 2 sec or longer.

Reaction of the operator to loss of control power is discussed briefly in Section 5.6.4. Annunciator signals from the control power center may be used to bring to the reactor control room information on such items as battery charger failure and frequency monitoring, but the main link between this center and the operator, both for conveying information to and action from the operator, will be by patrol operation on something like a once-per-hour basis.

5.3 ROD MOTION CONTROLS

5.3.1 Safety Rod Clutches. Safety rod motion is obtained, in general, by the combined action of gravity and water flow. There is also the buoyant force, but it is expected that the downward acceleration will never be less than 1g. The safety action is therefore accomplished by releasing the shim-safety rods from their holders by de-energizing the magnets in the magnetic clutches. This is a continuous process; the magnet current is decreased, not interrupted.

The magnet has been described in Section 2.4.2 of this report, but the control of the magnet current must now be explained. There are eight shim-safety rods and therefore eight magnets, which must be subject to a number of different possible causes of safety signal (these are enumerated in Section 5.5.1). The necessary interconnecting circuitry is centered about a signal line called the "sigma bus" because it carries the summation (more accurately, the net effect) of the various causative signals. The various instrument signals are fed to this bus by special "sigma amplifiers." Figure 5.3.A shows the circuit of a sigma amplifier, together with a typical PCP ionization chamber and preamplifier. The sigma bus is seen to be connected to the cathode of a triode, whose grid accepts the signal from the preamplifier. Increase of ionization current causes the preamplifier grid, and also the sigma amplifier triode grid, to go positive. Then the sigma bus is also driven positive. Assuming this action has occurred in only one of the five sigma amplifiers, the cathodes in the other four amplifiers are also carried positive, and the tubes tend to cut off. One of these tubes can "take over" from the first only if its grid is driven more positive than the first grid. Thus the sigma bus may be said to go along with the "highest bidder" of the various grid potentials. It has therefore been suggested that the sigma bus might be more appropriately named "auction bus." This predominance of auction effect over summation effect is important, for otherwise unwanted safety "scrams" (dropping of rods) would be initiated by cumulation of small effects.

The 16 magnet amplifiers (two for each magnet) are all connected in parallel to the sigma bus. If all 16 amplifiers and all eight magnets were identical in adjustment and operation, all safety rods might be expected to drop strictly simultaneously as the sigma bus potential rises past some critical value. What will actually happen, of course, is that one or several

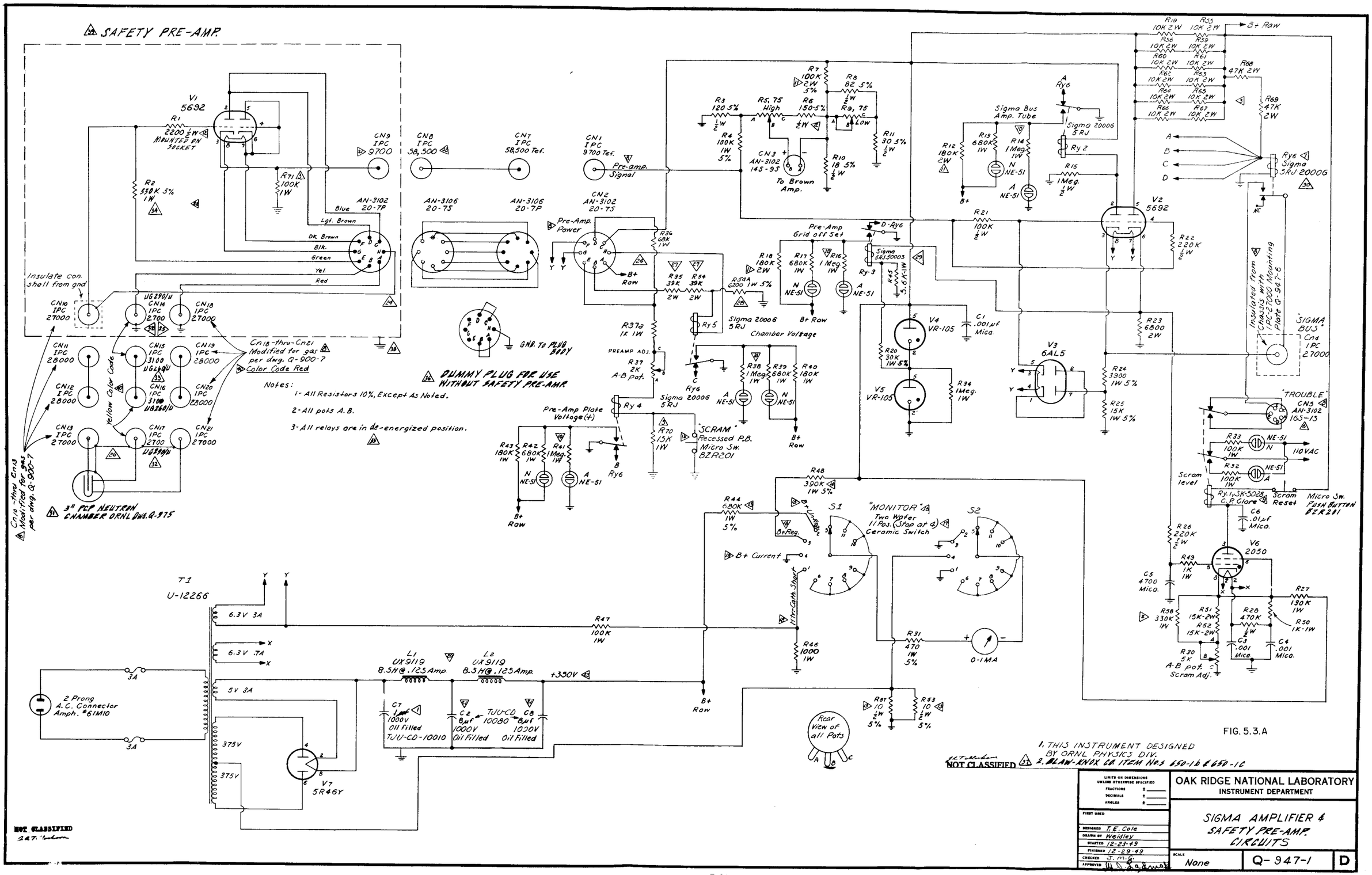
SAFETY PRE-AMP.
V1 5692
R1 2200 ½W MOUNTED ON SOCKET
R2 330K 5% 1W
R71 100K 1W
CN9 IPC 9700
AN-3102 20-7P
Blue
Lgt. Brown
DK. Brown
Blk.
Green
Yel.
Red
Insulate con. shell from gnd
CN10 IPC 27000
CN11 IPC 28000
CN12 IPC 28000
CN13 IPC 27000
CN14 IPC 2700
CN15 IPC 3100
CN16 IPC 3100
CN17 IPC 2700
CN18 IPC 27000
CN19 IPC 28000
CN20 IPC 28000
CN21 IPC 27000
UG290/U
UG260/U
Yellow Color Code
CN18-thru-CN21 Modified for gas per dwg. Q-900-7
Color Code Red
CN13-thru-CN17 Modified for gas per dwg. Q-900-7
3" PCP NEUTRON CHAMBER ORNL DWG. Q-975
CN8 IPC 58,500
CN7 IPC 58,500 Tef.
AN-3106 20-7S
AN-3106 20-7P
GND. TO PLUG BODY
DUMMY PLUG FOR USE WITHOUT SAFETY PRE-AMP.
Notes:
1- All Resistors 10%, Except As Noted.
2- All pots A.B.
3- All relays are in de-energized position.
CN1 IPC 9700 Tef.
Pre-amp. Signal
CN2 AN-3102 20-7S
Pre-Amp. Power
R36 68K 1W
B+ Raw
R35 39K 2W
R54 39K 2W
R54A 6200 1W 5%
R37a 1K 1W
PREAMP ADJ.
R37 2K A-B pot.
Ry 4
Ry 5
Sigma 20006 5RJ
Chamber Voltage
R38 1Meg 1W
R39 680K 1W
R40 180K 1W
NE-51
Pre-Amp Plate Voltage (+)
R43 180K 1W
R42 680K 1W
R41 1Meg. 1W
Ry6
R70 15K 1W
"SCRAM" Recessed P.B. Micro Sw. BZR201
R7 100K 2W 5%
R8 82 5%
R3 120 5%
R5, 75 High
R6 150 5%
R9, 75 Low
R4 100K 1W 5%
CN3 AN-3102 14S-9S
To Brown Amp.
R10 18 5%
R11 30 5%
Sigma Bus Amp. Tube
R12 180K 2W
R13 680K 1W
R14 1Meg. 1W
Sigma 20006 5RJ
Ry 2
R15 1Meg. ½W
R19 10K 2W
R35 10K 2W
R56 10K 2W
R59 10K 2W
R60 10K 2W
R61 10K 2W
R62 10K 2W
R63 10K 2W
R64 10K 2W
R65 10K 2W
R66 10K 2W
R67 10K 2W
R68 47K 2W
R69 47K 2W
B+ Raw
Ry6 Sigma 5RJ 20006
V2 5692
R21 100K ½W
R22 220K ½W
Pre-Amp Grid off Set
R18 180K 2W
R17 680K 1W
R16 1Meg 1W
Sigma 5RJ 20005
Ry-3
R45 5.6K 1W
V4 VR-105
C1 .001µf Mica
R20 30K 1W 5%
V5 VR-105
R34 1Meg. 1W
V3 6AL5
R23 6800 2W
R24 3900 1W 5%
R25 15K 1W 5%
Insulated from Chassis with IPC-27000 Mounting Plate Q-947-6
"SIGMA BUS" Cn4 IPC 27000
"TROUBLE" CN3 AN-3102 16S-1S
R33 100K 1W
110VAC
R32 100K 1W
Scram level
Ry 1, SK-5028 C.P. Clare
Scram Reset
Micro Sw. PUSH BUTTON BZR201
C6 .01µf Mica
V6 2050
R26 220K ½W
R49 1K 1W
C5 4700 Mica
R27 130K 1W
R38 330K 1W
R51 15K-2W
R52 15K-2W
R28 470K ½W
R50 1K-1W
C3 .001 Mica
C4 .001 Mica
R30 5K A-B pot.
Scram Adj.
R44 680K 1W 5%
R48 390K 1W 5%
S1
"MONITOR"
Two Wafer 11 Pos. (Stop at 4) Ceramic Switch
S2
B+ Current
Mtr-Cath. Short
R46 1000 1W
R31 470 1W 5%
0-1MA
R51 10 ½W 5%
R53 10 ½W 5%
Rear View of all Pots
T1 U-12266
6.3V 3A
6.3V .7A
5V 3A
375V
375V
3A
3A
2 Prong A.C. Connector Amph. #61M10
V7 5R4GY
R47 100K 1W
L1 UX9119 8.5H@.125Amp.
L2 UX9119 8.5H@.125Amp.
+350V
C7 1µf 1000V Oil Filled TJU-CD-10010
C2 8µf 1000V Oil Filled
TJU-CD 10080
C8 8µf 1000V Oil Filled
B+ Raw
NOT CLASSIFIED
1. THIS INSTRUMENT DESIGNED BY ORNL PHYSICS DIV.
2. BLAW-KNOX CA ITEM Nos 650-1b & 650-1c
NOT CLASSIFIED
OAK RIDGE NATIONAL LABORATORY
INSTRUMENT DEPARTMENT
SIGMA AMPLIFIER & SAFETY PRE-AMP. CIRCUITS
DESIGNED T.E. Cole
DRAWN BY Weidley
STARTED 12-23-49
FINISHED 12-29-49
CHECKED J. M.
SCALE None
Q-947-1
D

FIG. 5.3.A

of the rods will drop before the others, and the number that drop will depend on subsequent time-dependence of the reactivity. Probably the usual scram will consist of the dropping of only one rod.

The circuit diagram of a magnet amplifier is shown in Fig. 5.3.B. The magnet current is drawn from a separate rectifier, fed from a separate power line. This provision for interruption of magnet power without affecting amplifier power makes possible the two kinds of scrams: fast scram by amplifier action, and slow scram by interruption of magnet power. The fast scram channels are reserved for those safety signals which call for action in minimum time; the slow scram is for less urgent signals.

The two amplifiers feeding a given magnet are connected (connector labeled "comp.") so as to share more or less equally the magnet current. If one of the amplifiers should fail, the other would keep the total current near normal, and closing the "normal-exchange" switch gives further margin for operation with one amplifier. A further safety feature incorporated in the design is that a short to ground of the sigma bus will shut off magnet current by increasing the current through the second half of the double triode V5.

5.3.2 Motor Drive of Shim Rods. The motor drives for the shim rods have been described in Section 2.4.5. Here it is necessary only to recapitulate those features directly relevant to control of rod motions.

The shim-rod motors are three-phase 220-volt 1/6-hp squirrel-cage motors, of 1800 rpm rating. Start, stop, and reverse are the only control actions called for. Reversal is accomplished by phase interchange. This simple control picture is, however, slightly complicated by two considerations: the desire to have a finer speed control than is obtained by simple on-off switching, and concern as to the possible safety implications of transition from three-phase to single-phase operation by loss (open circuit) of one power wire.

A highly satisfactory means of having fine control of motor speed was found in the simple device of inserting a single resistor for each phase in the supply to all the shim-rod motors. The large initial current required for high acceleration is cut down by the resistor, giving a low acceleration start. Thus manual on-off switching can give a close, fine-scale adjustment of rod position. This use of "low" speed is discussed in Section 5.5.2. The resistor is chosen with such power rating (350 watts) that it will safely

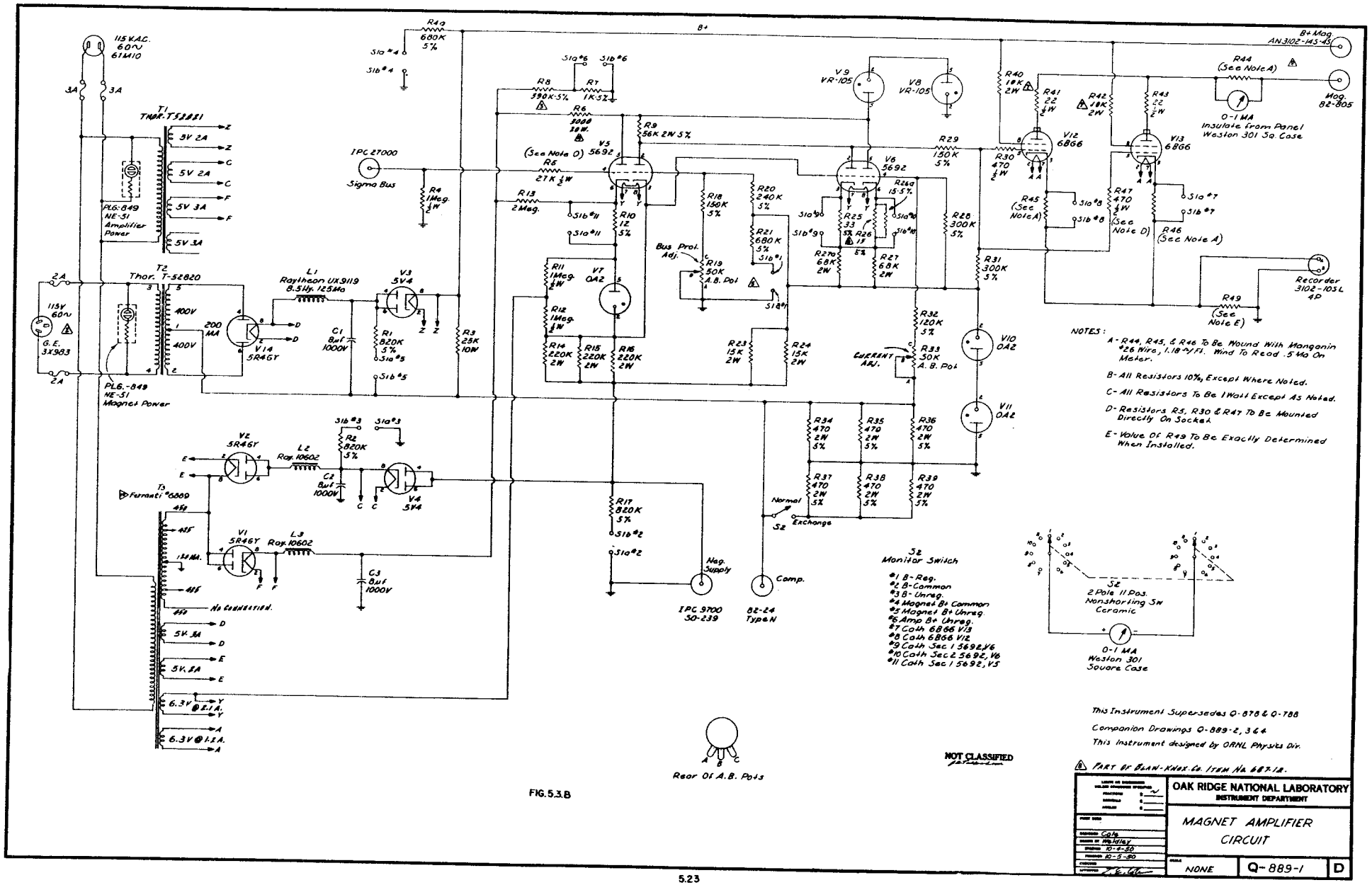
115 V.A.C. 60 ~ 61M10
3A
3A
T1 THOR. T52821
5V 2A
5V 2A
5V 3A
5V 3A
PL6-849 NE-51 Amplifier Power
2A
2A
115V 60~
G.E. 3X983
T2 Thor. T-52820
400V
400V
PL6-849 NE-51 Magnet Power
V14 5R4GY
200 MA
L1 Raytheon UX9119 8.5Hy. 125Ma
C1 Buf 1000V
V3 5V4
R1 820K 5%
R3 25K 10W
R4a 680K 5%
S1a #4
S1b #4
IPC 27000
Sigma Bus
R4 1Meg. ½W
B+
R8 390K 5%
R7 1K 5%
S1a #6
S1b #6
R6 3000 10W
R9 56K 2W 5%
V5 5692
(See Note D)
R5 27K ½W
R13 2Meg.
S1b #11
S1a #11
R10 12 5%
R11 1Meg. ½W
R12 1Meg. ½W
V7 OA2
R14 220K 2W
R15 220K 2W
R16 220K 2W
R18 150K 5%
R19 50K A.B. Pot
Bus Prot. Adj.
R20 240K 5%
R21 680K 5%
S1a #1
S1b #1
R23 15K 2W
R24 15K 2W
V9 VR-105
V8 VR-105
V6 5692
R25 33 5%
R26 15 5%
R26a 15 5%
S1a #10
S1b #10
S1a #9
S1b #9
R27a 68K 2W
R27 68K 2W
R29 150K 5%
R28 300K 5%
R31 300K 5%
R32 120K 5%
R33 50K A.B. Pot
Current Adj.
V10 OA2
V11 OA2
R34 470 2W 5%
R35 470 2W 5%
R36 470 2W 5%
R37 470 2W 5%
R38 470 2W 5%
R39 470 2W 5%
R40 10K 2W
R30 470 ½W
R41 22 ½W
R42 10K 2W
R43 22 ½W
V12 6BG6
V13 6BG6
R45 (See Note A)
R47 470 ½W (See Note D)
R46 (See Note A)
S1a #8
S1b #8
S1a #7
S1b #7
R44 (See Note A)
0-1 MA Insulate from Panel Weston 301 Sq. Case
B+ Mag. AN3102-14S-4S
Mag. 82-805
Recorder 3102-105L 4P
R49 (See Note E)
V2 5R4GY
L2 Ray. 10602
C2 Buf 1000V
V4 5V4
S1b #3
S1a #3
R2 820K 5%
T3 Ferranti #6889
4V
415
150 MA.
415
4V
No Connection.
V1 5R4GY
L3 Ray. 10602
C3 Buf 1000V
5V. 3A
5V. 3A
6.3V @ 2.1A.
6.3V @ 1.1A.
R17 820K 5%
S1b #2
S1a #2
Neg. Supply
IPC 9700 50-239
Normal
Exchange
S2
Comp.
BZ-24 Type N
S2 Monitor Switch
#1 B-Reg.
#2 B-Common
#3 B-Unreg.
#4 Magnet B+ Common
#5 Magnet B+ Unreg.
#6 Amp B+ Unreg.
#7 Cath 6BG6 V13
#8 Cath 6BG6 V12
#9 Cath Sec 1 5692, V6
#10 Cath Sec 2 5692, V6
#11 Cath Sec 1 5692, V5
S2 2 Pole 11 Pos. Nonshorting Sw Ceramic
0-1 MA Weston 301 Square Case
NOTES:
A- R44, R45, & R46 To Be Wound With Manganin #26 Wire, 1.18 Ω/Ft. Wind To Read .5 Ma On Meter.
B- All Resistors 10%, Except Where Noted.
C- All Resistors To Be 1 Watt Except As Noted.
D- Resistors R5, R30 & R47 To Be Mounted Directly On Socket.
E- Value Of R49 To Be Exactly Determined When Installed.
This Instrument Supersedes Q-878 & Q-788
Companion Drawings Q-889-2, 3 & 4
This Instrument designed by ORNL Physics Div.
PART OF BLAW-KNOX Co. ITEM No. 687-1A.
Rear Of A.B. Pots
A B C
NOT CLASSIFIED
OAK RIDGE NATIONAL LABORATORY
INSTRUMENT DEPARTMENT
MAGNET AMPLIFIER CIRCUIT
NONE
Q-889-1
D

FIG. 5.3.B

carry the load when all eight motors are turned on. However, its resistance is such (of the order of 40 ohms) that it will normally permit the operation of only one motor at a time.

An open circuit in one of the three wires feeding the motors, causing single-phase operation with loss of ability to change direction of rotation, is a hazard that might be serious. For instance, if withdrawal were in progress and an overriding signal for reverse came through, it would be ineffective and withdrawal would continue. In any event, the safety circuits should protect the reactor. This loss-of-phase difficulty, in fact, represents a typical instance of a minor calculated risk. Acceptance of a few such risks permits savings in cost and complexity of equipment, savings which may reasonably be regarded as returns on the extensive investment in safety systems.

5.3.3 Motor Drive of Regulating Rods. The regulating rods are driven by servo-controlled d-c motors. The servo mechanism is a velocity servo giving a motor shaft speed $\dot{\theta}$ proportional to input voltage V_i. Figure 5.3.C shows how the input signal V_i is formed as the difference between a positive voltage measuring ionization current and a negative reference voltage. The positive voltage is the product of the ion-chamber current, proportional to neutron flux, and the resistance in the motor-operated rheostat (MOR). The servo functions so that a positive increment in V_i causes the regulating rod to be inserted. Thus, for any given setting of the MOR, an increase in neutron flux causes an increase in ionization current, and, hence, an insertion of the regulating rod or, conversely, a decrease in the neutron flux, results in rod withdrawal.

The particular function of the MOR is to manage reactor control over the considerable range between N_F (full operating flux) and N_L (about 1% of N_F). Suppose, for example, the reactor is rising with a 20-sec period. Then the current through the MOR would be rising as $e^{\lambda t}$, with $\lambda = 0.05\ \text{sec}^{-1}$. Now, if the motor of the MOR is turning at such speed and in such direction that its resistance is decreasing as $e^{-\lambda t}$, with the same value of λ, the positive part of V_i remains constant, and the regulating rod does not move. The servo might then be said to be holding the reactor on a 20-sec period. The desired action of the MOR is obtained by using a constant-speed motor and an exponential resistance winding. The winding is not continuous but consists of 250 steps,

DWG. #10545
NOT CLASSIFIED

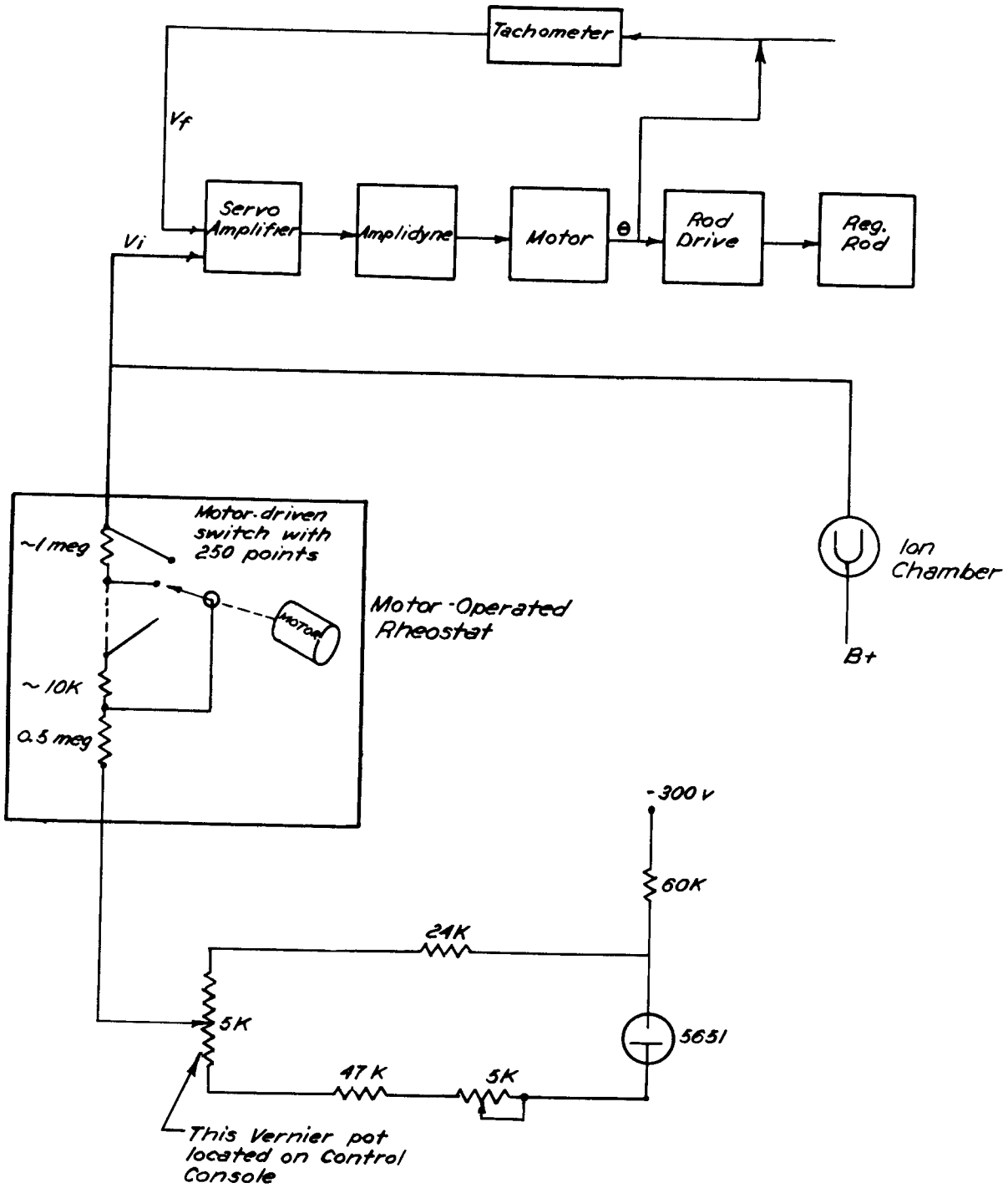

FIG. 5.3.C.

SERVO INPUT SIGNAL

giving a range from minimum resistance of 0.5 megohm to maximum value (after 330° rotation) of 50 megohms. The exponential effect is achieved by making each step proportional to the total resistance at that step. This means a first step of about 10,000 ohms and a final step of about 1 megohm, as indicated in Fig. 5.3.C.

For raising the reactor from N_L to N_F, a 20-sec period is chosen as a safe, fairly rapid possibility. In going down from N_F (i.e., in "setback") such a fast period cannot be managed by the regulating rod because of the latent (delayed neutron) reactivity. Fast setback is still useful as a fast way of lowering reactor level short of a scram, but a slower, 90-sec, period is also provided for slow setback. This means two different speeds for the MOR. To avoid mechanical gear changing, two motors with suitable gear reduction ratios are coupled to the rheostat through a differential. The actual time for the two-decade change is 90 sec for the fast and 7 min for the slow setback.

It is important that the rheostat should not turn in one step from the 50-megohm value to the 0.5-megohm value. Limit switches, backed by mechanical stops, prevent this. Because of the stops, a friction clutch is inserted in the rheostat shaft.

A selsyn reports the position of the MOR shaft to the control console on a scale which is logarithmic so as to match the exponential winding. The setting of the MOR can be changed in the upward direction by the fast motor drive, and in the downward direction by either the fast or slow. A vernier interpolation between the steps of the MOR may also be made from the control console with the 5K potentiometer shown in Fig. 5.3.C.

The d-c motor used to drive the regulating rod is a special General Electric model 5BBY79AB7, 1 hp, with permanent magnetic field. Armature current is derived from a 1500-watt amplidyne, model 5AM78AB78. The drive motor of the amplidyne is a three-phase 440-volt 3.6-amp motor. The rod motor is driven by the amplidyne with armature voltage proportional to the difference in currents flowing in the amplidyne fields. It is therefore the function of the servo amplifier to establish the current difference as proportional to V_i. The circuit of the servo amplifier is shown in Fig. 5.3.D. The amplidyne fields are in the plate circuits of the two pairs of 6BG6 output tubes, operating push-pull. Of each pair of tubes one may be designated "regular" and the other "helper." The two regular tubes have their cathodes tied together.

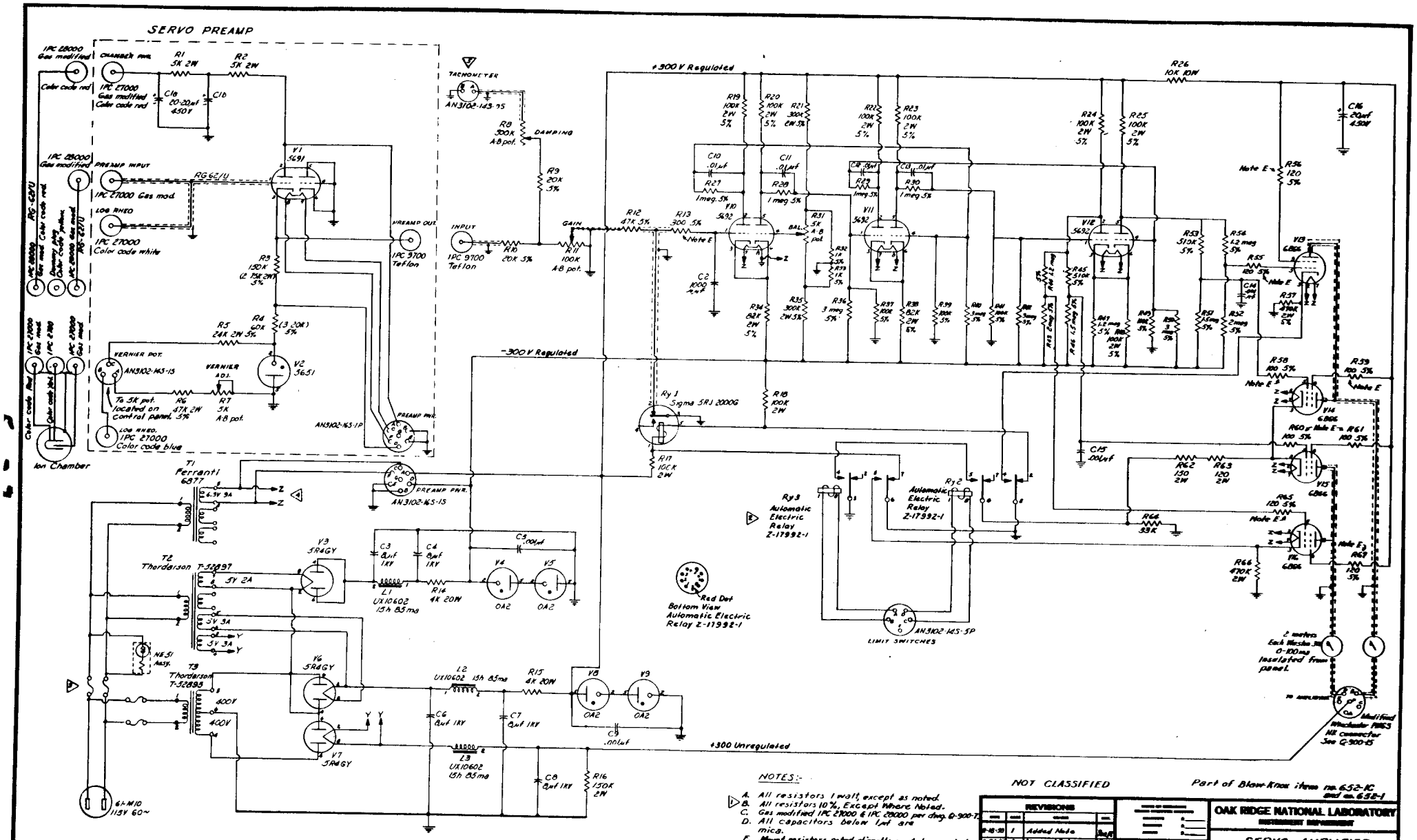
SERVO PREAMP
IPC 28000 Gas modified
Color code red
CHAMBER PWR.
IPC 27000 Gas modified Color code red
R1 5K 2W
R2 5K 2W
C1a 20-20µf 450V
C1b
IPC 28000 Gas modified
PREAMP INPUT
RG 62/U
IPC 27000 Gas mod.
LOG RHEO
IPC 27000 Color code white
V1 5691
R3 150K (2 75K 2W) 5%
R4 60K (3 20K) 5%
R5 24K 2W 5%
VERNIER POT.
AN3102-145-15
VERNIER ADJ.
To 5K pot. located on Control panel. 5%
R6 47K 2W
R7 5K A-B pot.
V2 5651
LOG RHEO. IPC 27000 Color code blue
Ion Chamber
PREAMP OUT
IPC 9700 Teflon
PREAMP PWR.
AN3102-145-1P
TACHOMETER
AN3102-145-15
R8 300K A-B pot.
DAMPING
R9 20K 5%
INPUT
IPC 9700 Teflon
R10 20K 5%
GAIN
R11 100K A-B pot.
+300 V Regulated
R12 47K 5%
R13 300 5%
Note E
C2 1000 µµf
R19 100K 2W 5%
R20 100K 2W 5%
R21 300K 2W 5%
C10 .01µf
R27 1meg. 5%
R28 1meg 5%
V10 5692
R31 5K A-B pot.
BAL.
R32 1K 5%
R33 1K 5%
R34 82K 2W 5%
R35 300K 2W 5%
R36 3 meg 5%
R22 100K 2W 5%
R23 100K 2W 5%
C12 .01µf
C13 .01µf
R29 1meg 5%
R30 1meg 5%
V11 5692
R37 100K 5%
R38 82K 2W 5%
R39 100K 5%
R40 3meg 5%
R41 3meg 5%
R42 3meg 5%
R43 3meg 5%
R44 1.5 meg 5%
R45 51K 5%
R46 1.5 meg 5%
R47 100K 2W 5%
R48 100K 5%
R49 3 meg 5%
R24 100K 2W 5%
R25 100K 2W 5%
R26 10K 10W
C16 20µf 450V
V12 5692
R53 510K 5%
R54 1.2 meg 5%
R55 100 5%
C14 .01µf
R56 120 5%
Note E
V13 6BQ6
R57 3.9K 2W 5%
R52 2 meg 5%
R58 100 5%
R59 100 5%
V14 6BQ6
R60 100 5%
R61 100 5%
C15 .01µf
R62 150 2W
R63 120 2W
V15 6BQ6
R64 33K
R65 120 5%
R66 470K 2W
R67 120 5%
-300 V Regulated
Ry 1 Sigma 5R1 2000G
R18 100K 2W
R17 100K 2W
Ry 3 Automatic Electric Relay Z-17992-1
Ry 2 Automatic Electric Relay Z-17992-1
Red Dot
Bottom View Automatic Electric Relay Z-17992-1
AN3102-145-5P
LIMIT SWITCHES
T1 Ferranti 6877
6.3V 9A
AN3102-145-15
PREAMP PWR.
T2 Thordarson T-52B97
5V 2A
5V 3A
5V 3A
V3 5R4GY
C3 8µf 1KV
C4 8µf 1KV
C5 .001µf
L1 UX10602 15h 85ma
R14 4K 20W
V4 OA2
V5 OA2
NE51 Assy.
T3 Thordarson T-52B95
400V
400V
V6 5R4GY
V7 5R4GY
L2 UX10602 15h 85ma
R15 4K 20W
C6 8µf 1KV
C7 8µf 1KV
L3 UX10602 15h 85ma
C8 8µf 1KV
R16 150K 2W
V8 OA2
V9 OA2
C9 .001µf
+300 Unregulated
2 meters Each Weston 301 0-100ma Insulated from panel.
TO AMPLIFIER
Modified Winchester PMC3 NE Connector See Q-900-15
6.3V M10 115V 60~
NOTES:-
A. All resistors 1 watt, except as noted.
B. All resistors 10%, Except Where Noted.
C. Gas modified IPC 27000 & IPC 28000 per dwg. Q-900-T.
D. All capacitors below 1µf are mica.
E. Mount resistors noted directly on tube socket.
F. All relays shown deenergized.
This instrument designed by ORNL Physics Division.
NOT CLASSIFIED
Part of Blow-Knox items no. 652-1C and no. 652-1
REVISIONS
1 Added Note
2 Changed Relay
3 Moved Figures
4 Pin 2 Rd to Neutral
5 Pin letters added
OAK RIDGE NATIONAL LABORATORY
INSTRUMENT DEPARTMENT
SERVO AMPLIFIER AND SERVO PREAMP CIRCUIT
Q-1095-1
D

FIG.5.3.D

An important feature of this output circuit is the limit-switch action. These switches operate at extremes of regulating-rod travel of 12 in. in the uniform-sensitivity region at the middle of the reactor. The action of the limit-switch circuit, mentioned in Section 5.2.2, is to keep a light load on the shock absorbers in the limited direction while leaving the possibility of full torque in the opposite direction.

In attempting to trace out this action on Fig. 5.3.D, it is necessary to keep in mind that relays 2 and 3 are shown with their coils de-energized, corresponding to both end limit switches being actuated (open). If this is realized, four situations established by the limit switches can be seen: (1) normal operation with both limit switches closed and relays 2 and 3 energized, (2 and 3) two limited conditions with one or the other, but not both, relays energized, and (4) stand-by with both relays de-energized. The stand-by condition is achieved by manual switching, simultaneously opening both limit circuits. For normal operation the regular tubes have normal bias, and the helper tubes can also conduct on very large positive signal. (This particular action of the helper tubes does not affect linearity because it occurs only at such high signal that the amplidyne is already saturated.) In the other extreme of stand-by, both the regular and helper tubes are cut off, and, in addition, the amplifier input is grounded via relay 1. The two limited conditions call for cut-off of the regular tubes but leave one of the helper tubes capable of conducting on large positive grid signal, thus permitting rod motion in the unlimited direction.

Two complete servo channels are provided. The operator chooses the channel to be activated by a manual selector switch. Amplidyne motor power is cut off on the inactive channel, and during this stand-by condition a spring-action brake guards the inactive regulating rod against accidental insertion. When the channel is activated (amplidyne motor on), the brake is released by magnetic action.

The development work on the servo is summarized in ORNL-2. Performance tests therein reported, as well as experience on the MTR mock-up, show that the servo system operates within its design specifications (see Section 2.4.5).

5.3.4 Control System During Maintenance Shutdown. When the reactor is shut down for maintenance servicing, the top plug, carrying the drives and holders of the control rods but not the rods themselves, will be put in dry

dock (cf. Section 2.3.3). Instead of leaving all the instruments and controls completely disconnected, it seemed reasonable to provide connections to the top plug while it is in dry dock so as to permit some checking and servicing of instruments and controls. The general scheme for doing this is as follows:

When the top plug is in place on the reactor, the electrical connections (power connections for the rod drive motors, and signal connections for rod position and motion indicators) are brought to the plug on supporting arms called "semaphores." For removal of the plug to dry dock the cables are disconnected from the plug and the semaphores are dropped to a vertical position, bringing the free ends of the cables down to the sides of the cubicles on which the semaphore arms are mounted. Here they may be connected to cables in conduits running to another connector-board near the dry dock. From this board short connector cables serve the plug in dry dock. To minimize the cost of wiring, not all of the control rod drives can be tested simultaneously. Selection of the drives to be tested is made by selection of inter-connections at the cubicles.

Of the various instrument signals tied into the control system during operation, a certain number (e.g., water flow) must be disconnected during dry-dock testing, since otherwise rod-holder motion would be vetoed by lack of proper signal. This is done by pulling certain test blocks, thus isolating the control actions of the inactive instruments.

To ensure safe return from the dry-dock regime to the operating regime, interlocks on the semaphore arms and on the test blocks are provided. In addition, there is a loop circuit through the connecting cables which tells the operator (by annunciator) whether all the cables are connected for the operating regime. Thus operation is permitted only after the control cables are in place on the top plug, and after all the instrument signals have had their control actions restored.

5.4 CONTROL CONSOLE

The control console, located in the center of the reactor control room (see Section 5.7.1), is made up of five unit panels laid out on a circular arc of 51 in. radius and extending some 240°. At the center of this arc, the operator will be seated in a movable chair, giving him easy access to the information and control elements spread out on the panels. At his left hand is a telephone by which he can communicate with other control and instrument centers, such as the one in the Process Water Building. By looking over the top of the console, which is 40 in. from the floor, he can see the instrument panels, particularly panels D to H, standing in an arc directly in front of him.

On the outside of the console, each of its five units has vertical-hinged doors to give free access to the interior (see Fig. 5.4.A). Each panel is either hinged or otherwise removable so as to give access from the top.

Figure 5.4.A also shows the various indicating and control devices mounted on the panel. These items will be briefly mentioned here. Full significance of some of the terms thus introduced will become clear in the later sections devoted to the workings of the control system.

The panels will be discussed as faced by the operator, from his left to his right. On his extreme left is panel N, carrying eight identical units, one for each of the eight possible shim rod positions. Each unit contains two principal elements, a selsyn receiver dial and a switch. The selsyn dial is calibrated in inches from 0 to 30 with clockwise rotation indicating withdrawal. Associated with the dial are four amber lights which come on, respectively, when the magnetic clutch is not holding its rod, when the upper limit switch is actuated, when the lower switch is actuated, and when the seat switch is actuated. That is, in normal operation, all four lights would be off. The switch has six positions, giving different controls over rod motion, to be detailed in a later section. On either side of the switch are amber lights, the left indicating that a rod is selected for withdrawal, the right that it is preferred for insertion. Also on the left is a red light indicating that withdrawal is in progress, and on the right a similar green light for insertion. Finally, a name plate identifies the shim rod by number.

DWG #10549
NOT CLASSIFIED

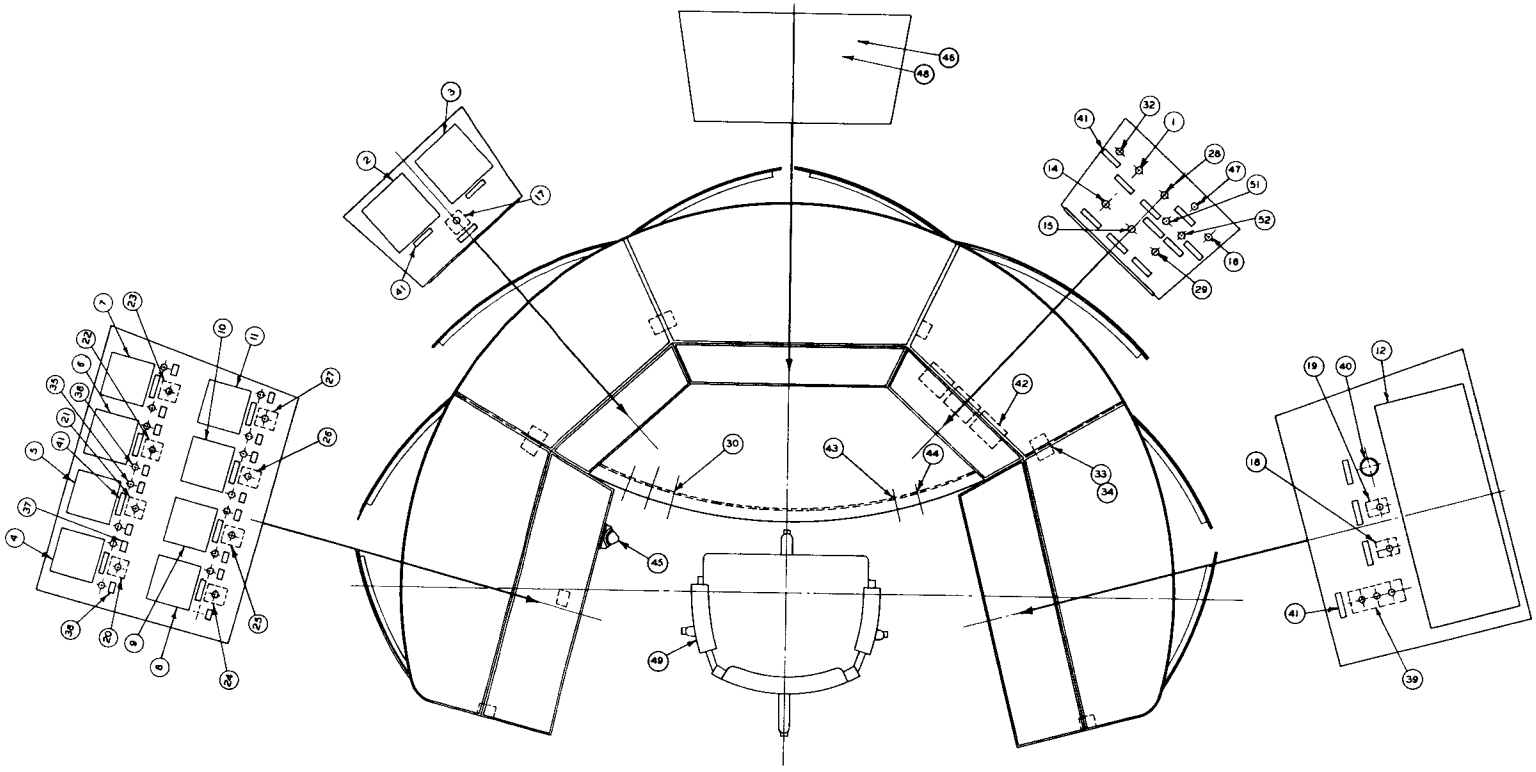

FIG 5.4 A

CONTROL CONSOLE LAYOUT

CONTROL CONSOLE INSTRUMENT SCHEDULE

ITEM	INSTRUMENT	SERVICE
1	REACTOR PERIOD	INDICATOR
2	SELSYN REC'R	REG. ROD #1 POS.
3	-DO-	REG. ROD #2 POS.
4	-DO-	#1 SHIM ROD POS.
5	-DO-	#2 SHIM ROD POS.
6	-DO-	#3 SHIM ROD POS.
7	-DO-	#4 SHIM ROD POS.
8	-DO-	#5 SHIM ROD POS.
9	-DO-	#6 SHIM ROD POS.
10	-DO-	#7 SHIM ROD POS.
11	-DO-	#8 SHIM ROD POS.
12	PROCEDURE PANEL	INDICATION
13		
14	S-1 SWITCH	SHIM ROD REVERSE BY-PASS
15	S2A SWITCH	SHIM RODS INSERT & WITHDRAW
16	S3 SWITCH	SHIM RODS SELECTOR
17	S4 SWITCH	REG. ROD SELECTOR
18	S5 SWITCH	SHIM RODS RAISE CLUTCH
19	S7 SWITCH	REACTOR LEVEL SET POINT
20	S21 SWITCH	#1 SHIM ROD CONTROL
21	S22 SWITCH	#2 SHIM ROD CONTROL
22	S23 SWITCH	#3 SHIM ROD CONTROL
23	S24 SWITCH	#4 SHIM ROD CONTROL
24	S25 SWITCH	#5 SHIM ROD CONTROL
25	S26 SWITCH	#6 SHIM ROD CONTROL
26	S27 SWITCH	#7 SHIM ROD CONTROL
27	S28 SWITCH	#8 SHIM ROD CONTROL
28	SX SWITCH	SHIM RODS MANUAL SCRAM
29	S28 SWITCH	SHIM RODS INTER-HIGH SPEED
30	SPST SWITCH	CONSOLE CEILING LIGHTS
31		
32	4PDT SWITCH	PERIOD CHANNEL SELECTOR
33	WIRE TERMINAL BLOCKS	CONDUCTORS
34	WIRE FANNING STRIPS	CONDUCTORS
35	LIGHTS 12V "AMBER"	#1 TO #8 SHIM RODS PREFERRED
36	LIGHTS 12 V "AMBER"	#1 TO #8 SHIM RODS SELECTED
37	LIGHTS 12 V "GREEN"	#1 TO #8 SHIM RODS INSERT
38	LIGHTS 12 V "RED"	#1 TO #8 SHIM RODS WITHDRAW
39	S6 PUSHBUTTON	"OFF"-"START"-"RUN" OPERATION
40	VERNIER	SET POINT
41	NAME PLATES	IDENTIFICATION
42	TRANSFORMERS	INDICATING LIGHTS
43	SPST SWITCH	ANNUNCIATOR RESET BUTTON
44	SPST SWITCH	ANNUNCIATOR ACKNOWLEDGE
45	PHONE	COMMUNICATION
46	GALVAN. PANEL	PART OF GALVANOMETER
47	S2 PUSHBUTTON	SHIM RODS SCRAM RESET
48	GALVANOMETER	INDICATES LEVEL & COUNTING RATE
49	CHAIR	CONSOLE CONTR. OPERATOR
50		
51	LIGHT 12 V "RED"	"SLOW"-"SCRAM" INDICATOR
52	LIGHT 12 V "RED"	"SLOW"-"SCRAM" INDICATOR

OAK RIDGE NATIONAL LABORATORY

Next is panel P, carrying the selsyn receivers for the regulating rods and also a regulating-rod selector switch. These selsyn dials are also calibrated in inches with clockwise pointer rotation indicating withdrawal. The 22 in. of possible rod motion is spread out for extra sensitivity over one and a quarter pointer revolutions so that the first few inches and the last few overlap. Amber lights mounted under the scale come on to indicate actuation of the regulating-rod limit switches.

Panel Q, at the center of the console, is devoted to two of the most important instruments, the flux-level galvanometer and the counting-rate galvanometer. These instrument signals are given in a pair of glass scales at the top of the panel, the upper one for flux level and the lower serving either for counting rate or for level deviation. The flux-level scale shows the signal coming from the compensated ion chamber. To give full range to this signal, two galvanometers, one of medium and one of high sensitivity, are used, each with three different decade values of Ayrton shunt. The total spread in these six ranges is thus 10^5. This choice of range is made on a flux-level range switch mounted in the lower right-hand corner of the panel.

The lower glass scale carries two sets of scale marks, an upper set constituting four decades of a logarithmic scale for counting rate and a lower set of linear marks from -250 to +250 for the level deviation readings. The galvanometer serving this scale can be switched by a "select circuit" switch next to the flux-level switch to "counting" (in which case its signal comes from the fission chamber) or to one of three (low, medium, high) sensitivities for the flux-level signal. This is the "deviation" measurement, which is useful for fine manual control when the level is high, and the flux-level galvanometer itself has therefore been cut back to low sensitivity.

Panel Q also carries a number of knobs for adjustment of zero, calibration, and adjustment of balance voltage for the galvanometers. There are, moreover, two additional items which deserve particular mention. One is the set of three (out, stop, and in) push button controls in the lower left corner for movement of the fission chamber. The other is the pair of alarm lights and reset buttons at the upper right-hand corner which work from phototube alarm circuits when any of the galvanometers go off scale.

To the right of panel Q is panel R with two (horizontal) rows of elements. From left to right on the upper row are a double throw switch for

selection between the two available compensated chamber period channels, the period indicating meter, the manual scram switch, the shim-rod withdrawal selector switch, and the scram reset push button. The selector switch is an eight-position switch for selection of any one of the shim rods to be withdrawn. On the lower row are three more switches relating to shim rod control. On the left is the reverse switch labeled "withdraw," "neutral," and "insert." On the right is the intermittent- and high-speed switch labeled "intermittent," "neutral," and "high."

On the extreme right of the operator is panel S. This is devoted largely to the procedure panel, which extends across the top. The procedure panel is an assembly of lights (green with one exception) with labels by means of which the overall status of the control system is reflected. Since a detailed discussion of the procedure panel will be included in Section 5.5.2, it need not be further described here. Underneath the procedure panel there are, from left to right, the vernier potentiometer for the reference voltage on the servo-amplifier input; the reactor level set-point switch, which controls the motor-operated rheostat; the switch controlling raising of a shim rod holder when there is no rod on it (e.g., during maintenance in dry dock), and, in its other position, for starting an amplidyne to cock a regulating rod; and three push buttons (off, start, run) for overall control, together with a cylinder lock requiring a key for starting.

5.5 CONTROL SYSTEM AND OPERATOR

In preceding sections a rather detailed picture has been given of the information-gathering and action-producing elements of the control system. It remains to describe the "brains" of the setup — that is, those elements that describe *which* actions should be produced in face of the given information. At the center of the picture there is, of course, the operator. In fact, the aim of this section may be said to be the description of how the operator's initiative fits into the control system, i.e., how this initiative is subject to a few outright automatic restraints and is guided by many precautionary and regulating automatic devices. An overall discussion of how the reactor is run appears in Section 5.6.

5.5.1 Automatic Rod Insertion. Operator initiative is overridden (or, one might say "ignored") by three categories of rod-inserting action: (1) scram, the dropping of safety rods; (2) setback, lowering of the servo set-point by the motor-operated rheostat; and (3) reverse, which is a simultaneous continuous insertion of all eight shim rods. It will be recalled that scram is of two types; fast, by electronic action of the ion chamber through the magnet amplifier, and slow, by electromechanical relay action cutting off magnet power. Somewhat similarly, setback can be either fast or slow, depending on the speed of the motor operating the rheostat.

It must be emphasized that the fast scram is in a class by itself, being the ultimate "safety" protecting the reactor. It is always operative and can never be vetoed by the operator. It is fast enough so that it will protect the reactor, by neutron level signal alone, against a 1/30-sec period, which is a reasonable estimate of the fastest period into which the reactor could be thrown in a start-up accident. In addition to level signals, the fast scram is at all times responsive to period signals.

Circumstances calling for the various automatic insertions are listed in Table 5.5.A. This tabulation is to be considered somewhat tentative, particularly in regard to numerical values of limits. The last item, manual, refers to the operator. Setback and reverse, caused manually or otherwise, continue only so long as the causative condition endures. When the manual-automatic switch is on "manual" (servos inoperative), setback is of course

meaningless, so under these conditions reverse is caused by those same signals which under automatic operation cause setbacks. This is not shown in Table 5.5.A but needs to be kept in mind.

The large number and variety of rod-inserting causes give rise to some concern as to the effects of trouble with the instrumentation itself. This is particularly significant with respect to scrams, which constitute the most serious interruptions of operation. With this in mind, the various instrument channels (with the exception of the safety ion chambers and the period meters) are each equipped with a test block which may be pulled without scramming the reactor if that instrument is behaving so as to jeopardize continued operation of the reactor. This admits the dangerous possibility of most of the instruments being out of operation at any time. Against this unfavorable situation there are two precautions: first, the fast scram circuits cannot be so disconnected; and second, the annunciators tell the operator that the blocks are out.

Each annunciator channel can give audible warning by means of the horn signal and visible warning by means of its own pair of lights, one red and one white. Both lights are dimly lit during normal operation of the instrument channel. Trouble (pulling of test block, danger signal, instrument failure) causes both lights to turn bright and the horn to sound. The operator can silence the horn by pressing a button, which also causes the white light to go out. The red light burns until the trouble is cleared, when it goes out and the white light comes back on. The operator acknowledges this signal by again pressing the button, causing the lights to return to normal dim operation.

5.5.2 Operator Initiative and the Procedure Panel. Description of the control console in Section 5.4 included mention of a special panel called the "procedure panel." This panel is shown in Fig. 5.5.A,* which also includes (at the bottom of the diagram) some information from other panels. The procedure panel can perhaps best be described as an "illuminated block diagram"; that is, it is a block diagram of the procedure of getting various control rod motors to run, together with lights to indicate the status of the procedure at any time. The panel is arranged so that, from top to bottom, lights come on successively as the necessary conditions for running the motor are satisfied; conversely, starting from the bottom, lights are out up to a point which indicates the last satisfied condition. The limits of the procedure panel

*For easier reference, Fig. 5.5.A is placed at the end of Section 5.6.

TABLE 5.5.A

Causes of Automatic Rod Insertion

	FAST SCRAM	SLOW SCRAM	FAST SETBACK	SLOW SETBACK	REVERSE
Neutron level (from safety ion chambers) = $1.5N_F$	X				
Neutron level = $1.2N_F$					X
Neutron level = $1.1N_F$				X	
Neutron level > $3N_L$ (start)					X
1-sec period	X				
5-sec period					X
N^{16} activity = $1.5N_F$		X			
N^{16} activity = $1.2N_F$			X		
N^{16} activity = $1.1N_F$				X	
Neutron level (boron thermocouples) = $1.5N_F$		X			
Neutron level (boron thermocouples) = $1.2N_F$			X		
Neutron level (boron thermocouples) = $1.1N_F$				X	
Reactor power (water flow and temperature) = $1.5N_F$		X			
Reactor power (water flow and temperature) = $1.2N_F$			X		
Reactor power (water flow and temperature) = $1.1N_F$				X	
Water temperature rise > 105% of normal				X	
Main water tank level = 50,000 gal		X			
Main water tank level = 100,000 gal				X	
Water flow < 80% of normal		X			
Water flow < 85% of normal				X	
Water flow < 5% of normal		X			
Monitor tube water flow < 80% of normal differential		X			
Air flow failure				X	
Instantaneous loss of instrument bus voltage		X			
30-sec loss of purchased power		X			
2-sec loss of relay bus voltage		X			
Manual		X	X	X	X

itself, indicated by the heavy dotted line in Fig. 5.5.A, do not include all the relevant information. As far as shim rods are concerned, the other items (which are represented by switch markings or lights on the other panels of the control console) are included at the bottom of the drawing. As far as regulating rods are concerned, the story on the procedure panel ends with the motor-operated rheostat. Other information about the servos and regulating rods is presented to the operator on panels P and S below the procedure panel. Since the procedure panel is concerned only with getting motors to run, information is shown elsewhere as to whether given motors are running, how far they have run, and the ultimate effects on reactor level and reactor period.

In Fig. 5.5.A an attempt is made to display the actual appearance of the procedure panel, as far as position and color of lights and placing and labeling of blocks are concerned. Circles indicate principal end objectives; square blocks refer to manual operations or switches; and rectangular blocks represent automatically imposed conditions. Ganging of some switches is shown by dotted lines between square blocks. For the convenience of anyone who might wish to compare this diagram with the elementary circuit diagrams (not included in this report) reference numbers for switches, relays, and instrument contacts are included. In attempting such a comparison, one must keep in mind two facts: first, the procedure diagram is incomplete; for example, it shows only one servo channel and thus sheds no light on the interaction of the two servo channels; second, there is no point-by-point correspondence of the elementary diagram and the procedure diagram, since they are drawn to serve quite different purposes.

The procedure panel is divided vertically into three main regions: the left-hand section pertaining mainly to withdrawal of shim rods; the middle section pertaining to regulating rod motions; and the right-hand section pertaining to insertion of shim rods. Suppose one starts at the top left-hand corner. The light labeled "dry dock" (see Section 5.3.4) will be on when the reactor plug is in dry dock, and otherwise off. If the semaphore arms are up and cables are plugged in for normal operation and if, in addition, the dry-dock test blocks are back in place, the other green light comes on. (The dry-dock test blocks in the relay cabinets must not be confused with the operation test blocks on the control panels.) For either of these two conditions (dry dock or operation) the line running down to "raise and scram"

indicates that a selected shim rod motor can be run in the raise, or withdrawal, direction. (The terms "withdraw" and "insert" are used to refer to motions of the control rods; "raise" and "lower" refer only to empty rod holders.) Throwing of this switch (S-5) to raise a rod holder also causes a scram, ensuring that the rod holder is empty and thus guarding against inadvertent dangerous withdrawal. The other position of this switch permits starting of an amplidyne (provided it has been selected on the manual-automatic switch) subject again to automatic scram. Without the scram condition, it is safe to start the amplidyne when its regulating rod is fully withdrawn and the corresponding limit switch is actuated.

Following down from the "raise and scram" position of S-5 is seen to lead to the individual withdrawal circle, provided S-21 is on "raise" and provided the rod seat interlock (second precaution to ensure that rod is not being raised) is actuating relay R-51. The notation S-21 is used to represent any one of the eight individual shim rod switches, S-21 to S-28. Similar notations apply to the insert interlock MI-1 and the limit switch relay R-21. These conditions on withdrawal simply imply that one is not at the same time trying to run the motors in the opposite direction, and that the rod is not already withdrawn as far as it can go.

Returning to the top of Fig. 5.5.A, if the semaphore and test block light is on, the operator may proceed to use his key on the cylinder lock, releasing the start and run buttons. Assuming start-up from a low level, as with a cold, clean reactor, he would push the start button. The next condition concerns the motor-operated rheostats. The condition, enforced by limit switches, requires that one rheostat be at the top of its range and the other at the bottom. (Since the operator is in the sequence of getting shim-rod motors to run and since these rheostats concern the regulating rods, the reason for this condition may not be obvious. The point is that now is the time to get this situation in order, not later when the reactor is at a high level and juggling of the control points would be awkward or disastrous.) One then proceeds via the "manual" side of S-4, or via "automatic," provided the selected servo channel has its regulating rod cocked (fully withdrawn). Next comes period supervision, requiring that the period be 7 sec or longer. If the level is below $10^{-5}N_F$, one would proceed toward "intermittent," with the requirement that the counting rate meter be alive (off zero). The timer light then starts

blinking on for ½ sec and off for 4½ sec, corresponding to rod motion. Next comes a period control of 30 sec or more, though this can be by-passed by the spring-return switch S-1.

The trip relay, R-16, must be set by switches S-2A and S-2B being in neutral. It will then seal itself in around S-2B, subject to instrument contacts on the galvanometer (galvanometer on scale with correct shunt set) and limit switches on the fission chamber positioning drive (chamber in one of three standard positions). (The conditions which trip R-16 are not shown in Fig. 5.5.A.) Switch S-21 must be on normal, the rod clutch must be engaged, there must be no reverse (which via relay R-20A overrides withdrawal), and, with insert interlock and limit switch permitting, one arrives at group withdrawal.

If after passing the 7-sec period condition the level had been greater than $10^{-5}N_F$, use of high speed would have been permitted, subject to the same constraints as for intermittent speed. Moreover, low speed (continuous withdrawal of any selected individual rod) is permitted as shown.

This summarizes the "start" regime, one of the two main withdrawal regimes. The other is "run," which is permitted by the sag relay R-4 when the neutron level is above $10^{-3}N_F$. It is also subject to a precaution on the fission chamber, which must be in the outermost of its three positions. In "run" use of low speed is permitted at once by manual selection, or by automatic if on the selected servo channel the regulating rod is inserted less than 11 in. (This milder condition, compared to the one in "start," is acceptable because at levels above "sag" the danger from a short period is very much reduced.) In addition to low speed, intermittent and high speeds can be obtained by means of the spring-return by-pass switch.

Since a principal feature of the run regime is the servo control, attention will now be turned to the way in which the servo control point is changed by the motor-operated rheostat. As far as raising the control point is concerned, this involves establishing a sub-regime called "run auxiliary," governed by relay R-3. This can be reached either on manual, or on automatic with the regulating rod concerned uncocked (partially inserted, and therefore indicating that the servo has functioned properly). Other conditions are that the period be greater than 30 sec and that the level be approximately $10^{-2}N_F$.

Run auxiliary "seals in," subject to trip only by the sag relay. The rheostat limit switches are shown with red lights, because they come on to indicate a condition *preventing* motor operation; all the other lights come on to indicate conditions of *permission*. The control point is raised by running the high-speed motor. (Motors of two speeds are provided to permit fast and slow setbacks.) There is a one-way block in the raise-lower switching. The fast lowering can always override slow lowering or fast raising. Lowering of the control point in the servo channel selected on automatic can be done manually with S-7, and is done automatically by sag and setback relays.

Interest now reverts to the shim rods and the insertion procedure indicated on the right-hand part of the procedure panel. At any time the individual empty rod holder, selected on S-21, may be lowered. In fact, if switches S-21 to S-28 are on any position other than "off" or "raise," each rod holder will be automatically lowered whenever its clutch is released. Thus, in case of a scram, as soon as a rod is dropped its holder starts in after it. When the rod holder is not empty, the seat switch acts through R-51 as a preliminary limit switch, backed up by the mechanical limit switch on the rod holder acting through R-31. Individual rods can be inserted by the "jog" position of S-21. If S-21 is on "preferred," the rod(s) so selected can be inserted by manual operation of S-2A. The reader will note that only one selected rod can be withdrawn in low, but that any or all may be inserted via jog or low. This is, of course, reasonable from the standpoint of safety. Concerning insertion, there are two significant differences between jog and low: first, jog is a nonreturn switch position, while low is spring-return; second, switch S-2A has for both "withdraw" and "insert" the special low acceleration action due to the resistor in series with the shim rod motors, and thus permits fine adjustment of rod position. This particular use of low is called "inching." The series resistor limits the use of low to one rod at a time.

Preferred shim rods are also inserted automatically by regulating-rod limit switches. If the regulating rod is withdrawn less than 7 in. (R9), preferred rods are inserted, and, if the withdrawal is less than 5 in. (R10), all rods are inserted. This simultaneous insertion of all rods is called "reverse." It may at all times be initiated manually on S-1 or by a level of 20% above N_F. Reverse may also be caused by certain period or level signals. If the run auxiliary relay, R-3, is not picked up, a level greater than N_L

will cause reverse, as will also a period of less than 5 sec. (The block labeled "start" should, more strictly, be labeled "not run auxiliary.") Under manual operation at levels above $3N_L$ reverse is caused by fast or slow set-back signals or by a short period.

Before leaving this section it may be well to add a few words on the relations between the two servo channels, since only the active channel shows on the procedure panel. The relay circuits for the motor-operated rheostats provide that when S-4 is on one servo channel the rheostat on the other channel is raised to its limit. Conversely, the active channel will have its rheostat run to the bottom when the level falls below "sag." This combination of actions would normally leave the rheostats satisfying the condition imposed on "start." Switching from one servo to another should not be done without first cocking the regulating rod that is being left since otherwise the procedure sequence does not permit return to this servo except with the automatic scram of switch S-5. (The rod could be cocked by going out on the plug and cranking it up by hand.) Normal procedure would be to insert a shim rod so that the servo, trying to hold to the control point, would cock the regulating rod. Then switching to the other servo would cause automatic raising of the first rheostat, thus leaving the first channel in optimum stand-by readiness, with its rod cocked and control point at the top.

5.6 REACTOR OPERATION

In order to review and integrate the detailed information of preceding sections, an attempt will be made here to recount briefly the operating procedure in a few typical situations. These will include start-up, shutdown of both the normal and scram varieties, manipulation of level near N_F, and operation in face of difficulty.

5.6.1 Start-up Operation. In the starting of a cold reactor the operator is most concerned about a reliable neutron signal. He would therefore give attention to seeing that the fission chamber is in its most sensitive, innermost position, and that it is giving a readable signal on the counting-rate meter. Assuming this to be so and that the auxiliary process instrumentation shows normal, the operator could go on as discussed on the procedure panel to the use of intermittent withdrawal. This is subject to his initial permission, but the switch S-2B is nonreturn. The intermittent motion gives the operator a good idea of the reactivity of the reactor by the rate of rise observed during the off period. As the level passes $10^{-5}N_F$, he can use high speed. Meanwhile, he will probably have moved the fission chamber to its center position. He cannot, however, use intermittent or high speed while the fission chamber is being moved. He will also now be picking up neutron signals from the ion chambers. When the level reaches sag, the fission chamber should be in its outermost position, and, if the operator forgets, the sag relay will see that it is. In addition to the time required to reach criticality and get into a period, something like 10 or 15 min is required to bring the level up to get into "run." This will depend on how hard the operator crowds the period controls. The start regime is manual, though S-4 may be either on manual or on automatic; in general it would seem reasonable to have the servo available for possible corrective action at N_L.

In "run" the normal procedure would be to let the servo level off the reactor at its control point of N_L and then to raise the control point. With the logarithmic rheostat holding the reactor to a period of about 20 sec, it would take about 90 sec (the running time of the fast rheostat motor) to negotiate the factor of 100 from N_L to N_F.

Start-up from the higher levels typical of a recently operating reactor will be easier because the operation is free of the acute danger of getting

into a fast period at low levels. Otherwise, the procedure would not be greatly different unless the operator was especially hurried to keep ahead of xenon poisoning or for some other reason. Problems of this sort are considered in Section 5.6.4.

5.6.2 Shutdown. For a normal intentional shutdown the operator has the choice of a variety of procedures. For example, he could set all shim rod switches (S-21 through 28) on "jog" and leave them there. This would run all the shim rods completely in. If the manual-automatic switch is on automatic, the operative servo will be left with its regulating rod completely withdrawn and its rheostat completely lowered. Since this procedure leaves all the shim rods at the bottom of their travel, it is suitable for a relatively permanent (e.g., maintenance) shutdown but would not be advisable if the plan was to raise the level back up in a short time. In such a case, lowering of the control point, followed by careful insertion of preferred rods, would be a better plan.

As a matter of fact, discussion of shutdown procedures is largely academic because intentional shutdowns offer excellent opportunity for testing the various scram circuits and will probably be used exclusively for this purpose.

In case of unintentional automatic shutdown actions (setback, reverse, scram), the operator's reaction will, of course, depend on circumstances. Accordingly, suitable operator reaction to automatic shutdown action is discussed in Section 5.6.4.

5.6.3 Manipulation of Operating Level. There are a number of cases in which the operator will need to deviate from the simple process of letting the servo hold the reactor to a fixed control point. An example is the case in which shading of the neutron-flux distribution in the reactor by modifying the positions of the various control rods is required. This will presumably be a common requirement of the experimental work being done.

The problem confronting the operator is that of shifting the spatial distribution of neutron flux, as observed with the boron thermopiles and ion chambers (or perhaps by special instruments associated with the experiment concerned), with minimum effect on the overall reactor level observed on the galvanometer scale. Since the operator is much more rigidly constrained by

automatic controls in withdrawal than in insertion, he must be careful that this asymmetry does not embarrass him. Thus, he may select (on S-3) only one shim rod for low-speed withdrawal, whereas he is free to insert as many as he puts on "jog" (on S-21). Shading would best be done with one rod selected for withdrawal and one rod preferred for insertion. Assuming the servo to be in control, the two shim rods could be carefully moved in their respective directions by manual switching (on S-2A) without getting the regulating rod to call for shim rod motion. Alternatively, a less "fussy" procedure would be to withdraw the selected rod manually (on S-2A) and let the regulating-rod limit switches initiate insertion of one or more preferred rods.

5.6.4 Operation in Face of Difficulty. There is no clear line to be drawn between normal operation and operation under difficulty. The purpose here is to comment on a few of the situations in which the operator will feel more than his average need for attention to instrument signals and control actions. The examples chosen for discussion are change-over of servos, loss or interruption of power, automatic shutdown action, and accumulation of poison after unintentional loss of level.

When it is necessary or desirable to change from one servo-regulating rod channel to the other, the operator must, of course, change switch S-4 from one rod through manual to the other rod. In general, however, it would not be wise for him simply to do this whenever necessary without attention to related matters. For example, if it is possible to do so, the regulating rod on the channel being left should be cocked before S-4 is changed, since otherwise it would have to be cocked by manual twisting of the drive before the operator could return to this channel. The motor-operated rheostats are so interconnected that whenever one channel is selected on S-4, the motor on the other rheostat runs to its top. Thus, a switch directly from one channel to another cannot cause a dangerous withdrawal or an embarrassing insertion of regulating rod; the rod is already completely withdrawn and the control point is at N_F. However, suppose the operator is using a servo channel and leaves it to go to manual on S-4, having first cocked the rod. Suppose the control point is left well below N_F, say at 0.1 N_F. Now, if on manual operation the reactor is brought above this level, say all the way to N_F, it would be possible to throw S-4 back to the same servo channel, in which case the regulating rod would be thrown in and the reactor put into a negative period. This seems to be the worst "accident" that might be caused by poor operation with the servo interchange circuits.

As far as loss of power is concerned, the operator may be left figuratively as well as literally in the dark. This would be true particularly if the instrument bus and the control bus should go dead simultaneously. Since all the instrument lights and all the relay-indicating lights would be out, the operator would have no way of knowing whether the scram (automatic on loss of magnet amplifier power) was effective. He would know that the power was off, and if he had a reasonable faith in the law of gravity, he would probably remain at his post until power was restored. If only the instrument bus were lost, all the instrument lights would go out, but the clutch and seat lights would be operative and so would indicate the effectiveness of the scram. Conversely, if the control bus alone went out, instrument signals would remain available to show the effects of the scram.

Whenever the reactor is subject to automatic shutdown action, the operator's concern will be divided between the questions of what the causative trouble was and what the chances are of returning the reactor to normal operation. The circuits are, of course, designed so that the operator cannot interfere with the shutdown actions as long as the causative conditions remain. Hence the operator's first reaction to anything less drastic than a scram would be to do whatever is possible to clear the responsible condition. The proper corrective action in case of a reverse (caused by excess period or signal level) is clearly to decrease the period or the level, but, since this is already being done at a maximum rate by the reverse itself, the operator can afford to think ahead to the problem of holding the reactor (avoiding a negative period) as soon as the reverse ends. In the event of slow setback the situation is much the same, except (see Table 5.5.A) that there are several possible causes not having to do with reactivity, which must therefore be corrected otherwise than by the setback itself. Fast setback gives the operator a more serious problem, for the chances are pretty good that the regulating rod would insert fully, causing a reverse, and that the combined effect would be to put the reactor into a substantial negative period. It is to recoup the loss of reactivity in such circumstances that the moment the shutdown stopped the operator would use the by-pass (switch S-1) to get the high-speed withdrawal.

When the reactor is scrammed, the chances of getting back into normal operation are dependent upon the time history of previous operation as well as upon the obvious need of remedying the causative trouble. This is because of

the rapid accumulation of xenon poison after shutdown. In the original reactor design it did not seem practicable to provide the large excess reactivity that would be needed to override xenon in any event. The length of complete shutdown that can be tolerated after prolonged operation at N_F is of the order of a half-hour. This depends on charge depletion and probably other factors which affect reactivity. In any case, either for a complete shutdown or for a partial dropping of level after any appreciable operation near N_F, the operator will want to get the level back up as soon as he safely can. Here again if the level has not dropped below sag, he would make use of the by-pass switch to avail himself of shim rod withdrawal at high speed.

5.7 GENERAL SUMMARY

In order to hold this chapter down to suitable length it has been necessary to leave out all but a bare minimum of explanatory discussion. The reader may therefore feel confused or unsatisfied in regard to the reasons for adopting certain features and ignoring others. It is hoped that this state of mind will be at least partially relieved by the summary to be given here in two parts: first, a recapitulation of some of the basic principles which guided, or emerged from, the control development; second, an attempt to assay the load of responsibility still resting on the operator.

5.7.1 Basic Principles. Perhaps the most fundamental principle is the sharp distinction between insertion and withdrawal of shim rods. Thus *either* operator or automatic signal can insert any number of rods at any time, whereas withdrawal is always subject to *both* operator and automatic permission. Withdrawal is limited, moreover, to what is needed or safe under given circumstances. At high levels (in "run") only one rod at a time is available, since at these levels it is hard to see a need for moving more than one at a time. At the low levels characteristic of a "cold" start, only intermittent withdrawal is permitted. Here the reliability of information is relatively poor, coming entirely from one instrument. It is therefore important to be able to keep watch on the subsequent effect of each short interval of withdrawal, thus gauging the growing reactivity. As higher levels are reached, the instrumentation furnishes more varied and more reliable signals so that the use of high withdrawal speed is less hazardous. Under the special conditions of restart, presenting a serious need for high speed, it is made as conveniently available as can safely be done.

DWG. #10548
NOT CLASSIFIED

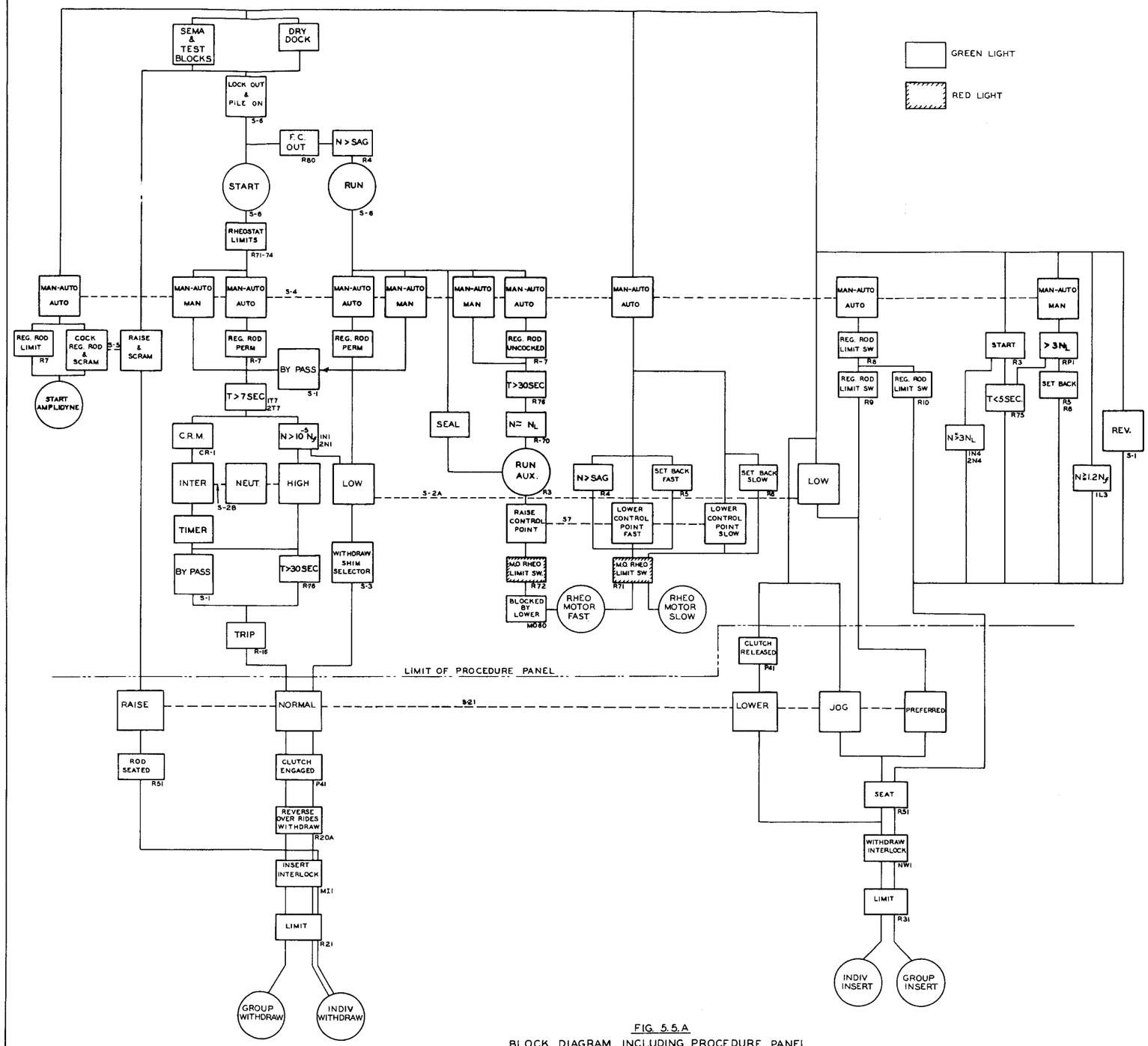

FIG. 5.5.A
BLOCK DIAGRAM INCLUDING PROCEDURE PANEL

The distinction between insertion and withdrawal is, of course, one aspect of the general philosophy concerning safety. Another aspect is the aim of having mild corrective measures come first, backed up thoroughly by ultimate action which is as foolproof as possible. All control equipment is designed to fail safe. There is continuous monitoring of the safety circuits in that currents are controlled only by hard vacuum tubes which, upon failure, cease conducting and thereby actuate annunciator or scram circuits. It is important to realize that not all apparent instances of instrument duplication overlap entirely. For example, the shading of neutron flux might cause signals from the ion chambers to be quite inaccurate measures of average reactor level. In such a case the additional information yielded by measurement of N^{16} activity is of real value.

It may be helpful to summarize the precautions applied in the period range and in the power range. Since most restarts will occur in the period range, high-speed withdrawal is necessary. Operation is manual and is under the supervision of the period meters as follows:

1. A 30-sec period trips "latched" withdrawal. Subsequent withdrawal requires constant operator attention.
2. A 7-sec period prevents any further withdrawal.
3. A 5-sec period inserts all shim rods.
4. A 1-sec period causes scram.

The top of the period range is guarded by the servo which levels the rise at $10^{-2}N_F$ or if the servo is turned off and the operator fails to level, all rods are inserted by the log N meter at about $3 \times 10^{-2}N_F$.

Short periods in the power range are both less probable and relatively harmless because of the proximity of the level safety setting and because of the corrective capacity of the servo. Therefore, of the period controls only the 1-sec period scram is retained. In the region of full power, inadequate cooling of the reactor ranks equally with excessive power level and the two situations are treated in the same fashion in order of severity as follows:

1. Alarm.
2. Automatic continuous reduction of power level through servo control as long as the unsatisfactory coolant or power level situation exists or until the power level is reduced to 1% of full power.

3. Automatic rapid reduction of power level as above except that the reactor may be left substantially subcritical if the situation persists.

4. Scram on extreme unsatisfactory condition.

Loss of cooling water is guarded by:

1. A flow meter in the main water line to the reactor.
2. Water level monitoring of the overhead supply tank.
3. Monitoring of main water valve positions.

Rise in power is guarded by:

1. Level safeties.
2. Water power instrument ($\Delta T \times$ flow).
3. Boron thermopiles.
4. N^{16} activity instruments.

Whereas in the lower ranges the principal concern is that of short periods, at full power a slow drift upward of the power level can be dangerous to the reactor. Since the safety circuits are subject to variations in water flow, magnet air gap conditions, shading of the ionization chambers, and other variables, the level at which scram occurs must necessarily be set high enough to ensure uninterrupted operation. For this reason the protection afforded by the water power instrument ($\Delta T \times$ flow), the boron thermopiles, and the N^{16} monitor become important in guarding against small slow rises in power.

A word may be added, finally, about the philosophy of providing for automatic operation with the servo. In its early version the reactor now known as the MTR was a homogeneous reactor, and the servo system was designed to cope with the change in reactivity induced by bubbles. Since it is possible to run the MTR manually, the servo, though simplified, must now be regarded as something of a luxury. Presumably, manual operation at its best would not yield the smoothness which the servo can achieve. Just how much utilitarian worth (particularly for the experiments that are being done in the reactor) this extra smoothness will contribute remains for experience to show. There is also some extra safety in servo-controlled operation since the servo is considerably faster than human reaction.

5.7.2 Responsibility of Operator. The operator should realize that a prolonged intensive effort went into design of the control system. It is, however, most unlikely that this effort could possibly have provided for every conceivable operational situation. Nevertheless, the operator would do well, when he feels unduly constrained or frustrated by the control system, to try to keep in mind *all* the implications of his intended action. It is probable that, as operating experience accumulates, it will become evident that some changes in the control system could profitably be made. Until such experience is accumulated, it would seem reasonable to ask the operator to learn to live with the system as designed.

The operator must also realize that at all times the reactor is in his hands, despite all the automatic operating and safety devices. This means that he must remain alert and attentive. He must have foresight to prevent emergencies from arising and presence of mind to deal with those emergencies which, in spite of everyone's efforts, inevitably will arise. Although the exact nature of his responsibility will not be fully clear until the system is constructed and installed, the following list of specific suggestions will at least show the kind of "mental notes" which must guide the operator:

1. At low levels be sure the counting-rate meter is alive. It is the only source of information at such levels, and unless its pointer gives evidence of responding to signal it would be foolhardy to attempt reactor operation.

2. After every scram be sure to turn switch S-2B (intermittent, neutral, high) to neutral. Otherwise there may be nothing to prevent the shim rod holders, lowered automatically after rods are dropped, from picking up rods and starting (possibly even high speed) withdrawal.

3. For smooth change of reactor level under servo control, keep the shim rods in step with the motor-operated rheostat. In particular, try to avoid letting the regulating rod get within 5 in. of full insertion, since at this point it automatically calls for reverse.

4. Avoid leaving any shim rods fully inserted. Any such rod is incapable of contributing to the effectiveness of a scram. To have full benefit of prompt scram protection, all rods should be in position to contribute some effect.

5. Never permit the bolts holding down the top plug of the reactor to be loosened unless the reactor is first scrammed. A serious accident could occur if the plug were lifted by the crane or by water pressure while the rods are still held.

It may be that field modifications of the installed reactor will change the relevance of some of these remarks, but, in any case, the operator will need to know his responsibility and to live up to it.

5.8 CONTROL AND INSTRUMENT CENTERS*

From an early date in the conception of the MTR, a centralized control room was planned for the control and instrumentation of the reactor and its major cooling processes. This arrangement is desirable since the materials of construction permit the operation of the reactor only as long as proper coordination of the heat removal processes is maintained. However, this plan for centralization was changed by recent determinations that the time element, gained by control of the major reactor-cooling process from the reactor control center, would not facilitate the operation of the reactor. With the admission of this premise into the basis of design for the reactor control center, the requirements for simplifications of control problems have resulted in other locations for the controls of the heat removal processes.

In the separation of the major systems of control and instrumentation for the reactor and the reactor heat removal processes, two major control and instrument centers are provided. These major control centers are located in the Reactor Building and in the Process Water Building. The reactor is controlled from the former, while the latter center, which is primarily for the control and instrumentation of process-water flow through the reactor, includes the instrumentation of the locally controlled reactor cooling-air system. A number of the supporting process systems are like the cooling-air system in that they have locally controlled equipment but have some instrumentation extended to one or both of the major control centers.

5.8.1 Reactor Control and Instrument Center. The reactor control and instrument center is composed of an instrument room and a control room, respectively, on the second and third floors of the lean-to section on the west side of the Reactor Building. The control room, directly above the instrument room, is at the level of the reactor top with access thereto by a connecting walkway. A stairway connecting these rooms facilitates the maintenance of associated control and instrumentation devices. The partition walls of the reactor control room are formed of sectional metal construction,

*ANL contribution.

providing an area approximately 22 by 47 ft which may readily be varied in length as required. Windows or glass sections, located only in the east wall of the control room, permit observation of control operations without entering the room and observation of activity on top and near the reactor from within the control room.

The services provided within the control and instrument rooms are peculiar to the use of these rooms. For consistency of instrument performance, these rooms are air conditioned for control of temperature and humidity. All lighting in the control room is by incandescent lamps, including a number of luminaries for general room illumination. Panel instrument illumination is provided by internal instrument lights and flush-mounted ceiling spotlights. Illumination in the instrument room is provided by fluorescent and incandescent lamps.

The control room layout includes an instrument panel to accommodate the initial requirements for indicators, recorders, and annunciators with a number of spare and partially utilized panel sections for future requirements. This panel board, facing in the direction of the reactor, is composed of eleven 4-ft-wide by 9-ft-high sections and extends the full length of the room with a rear access door at each end. Six panel sections, three at each end of the board, lie in a straight line. These two end panel groups are connected by the central panel sections which are arranged on a radius of approximaxely 7½ ft to allow for the control console.

The console in the control room mounts all devices for effecting manual control of the reactor, control indicating devices, and some indicating instruments. Other reactor indicating instruments and recorders are located on the central panel sections immediately in front of the console, as indicated in Fig. 5.8.A.

The instrument-room layout is provided with rows of instrument racks and boards to accommodate electronic components of automatic control and indicating devices, interlocking relay control groups, and power supply circuits for all reactor control and instrumentation devices. The instrument racks and relay boards extending lengthwise in this room are arranged to facilitate connections between the equipment mounted thereon and the instruments and controls in the room above. Electrical conductors pass to and from the racks and boards by way of floor and ceiling cutouts. The ceiling cutouts provide

NOT CLASSIFIED
Dwg #10785

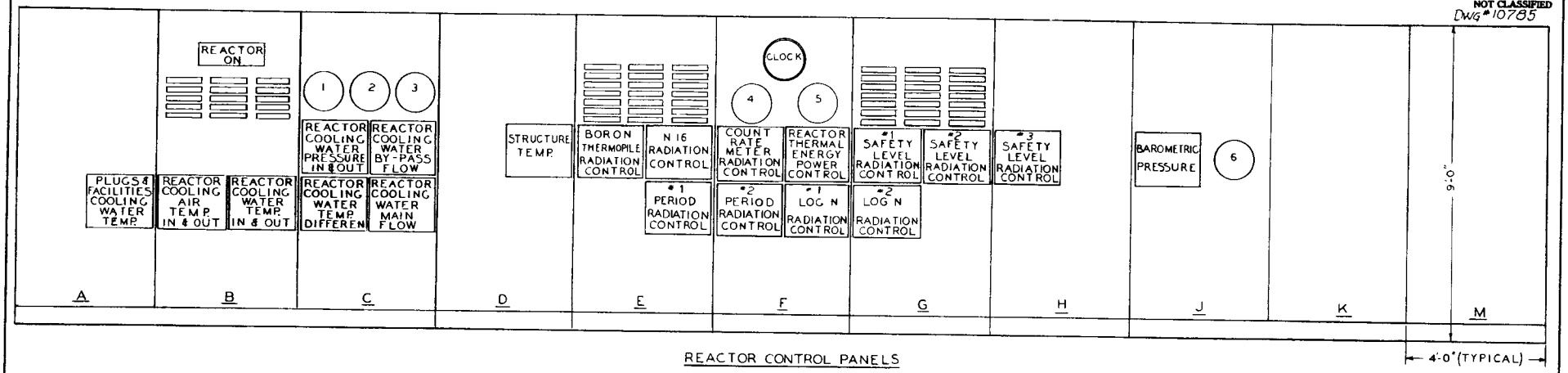

REACTOR CONTROL PANELS

DEVELOPED VIEW

SCALE ¼" = 1'0"

FUNCTIONS OF PRINCIPAL INSTRUMENTS

RECORDERS – AS INDICATED

INDICATORS

1. WORKING RESERVOIR LEVEL
2. INSTRUMENT AIR PRESSURE
3. REACTOR DISCHARGE AIR PRESSURE ALARM
4. NO. 1 SERVO ERROR
5. NO. 2 SERVO ERROR
6. DEMINERALIZED WATER BACK-UP RADIATION ALARM

LEGEND

RECORDER

INDICATOR

ANNUNCIATOR

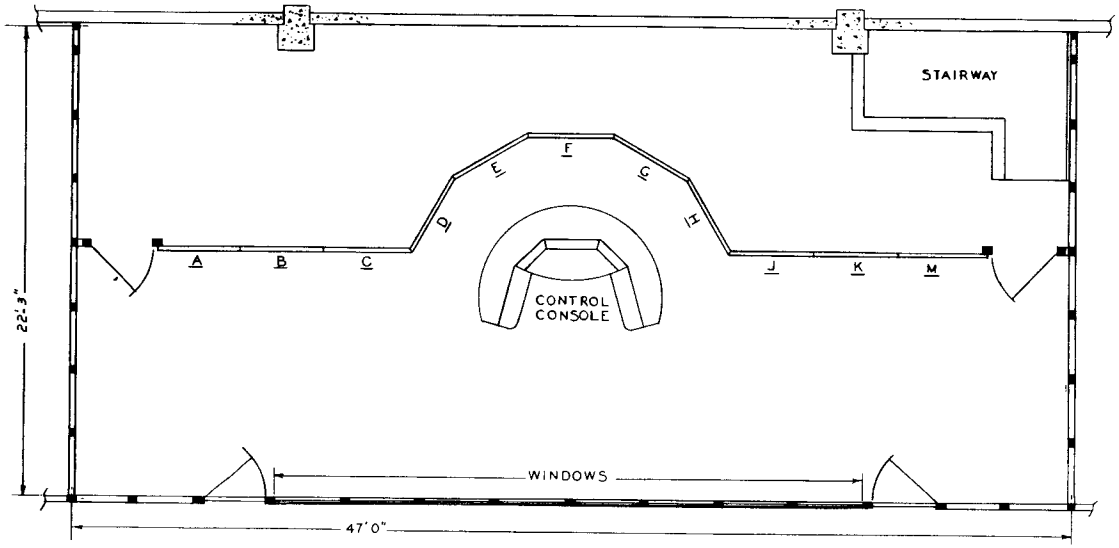

CONTROL ROOM

PLAN VIEW

SCALE ⅜" = 1'0"

TOLERANCES: FRACTIONAL TOL. ± 1/64; DECIMAL TOL. ± .005; ANGLE ± ½°; ALL DIMENSIONS TO AGREE WITH DRAWING UNLESS OTHERWISE NOTED	APPROVED FOR CONST.		ARGONNE NATIONAL LABORATORY	SYM.	CHANGE	DATE	BY	
	CHIEF ENGR.		This drawing is the property of the Argonne National Laboratory					
	CHIEF DRAFTSMAN							
	CHECKED							
	DRAWN	F.T. 1-4-50						
	GROUP	REPRESENTATIVE HUTTER LEYSE	SCALE	MATL.	NO. REQD.			

PART: REACTOR CONTROL ROOM &
ASSEMBLY: INSTRUMENT PANEL — LAYOUT
SHEET OF
DWG. NO. FIG. 5.8.A
ITEM NO.

for the most direct connections with the control room above. The floor cut-outs provide for the entrance of the cableways or conduit groups from the reactor and the reactor control and instrument power source.

5.8.2 Process-water Control and Instrument Center. The process-water control and instrument center is located near the west end of the south wall of the Process Water Building. This location is in the vicinity of the electrical unit load center. The control center is composed of an operator's desk facing a semihexagonal instrument panel which mounts the devices for effecting control of process-water flow through the reactor and the instrumentation of the principal and supporting reactor heat removal processes.

The instrument panel is composed of seven 4-ft-wide by 9-ft-high adjacent sections arranged in three straight lines. Two of these lines, one extending north and the other extending west, are each composed of three sections. The other section of panel connects with each of these lines at an angle of 45°.

The control devices on the instrument panel are for effecting the position of valves to control the main and by-pass process-water flows to the reactor, to permit the recycling of process water from the seal tank to the reactor, and to permit the flow of water from the demineralized-water storage tank to the reactor.

In general, the indicating and recording instruments on the panel are associated with the principal processes, i.e., the process-water and cooling-air systems of the reactor. Some of these instruments and a number of the annunciators are associated with the supporting processes and the effluent control systems.

The development diagram of the instrument panel, Fig. 5.8.B, identifies briefly the more important control and instrument locations.

5.9 GLOSSARY OF TERMS AND SYMBOLS

N_F - full normal operating power level of the reactor.

N_L - lowest power level at which servo can control reactor; about 1% of N_F.

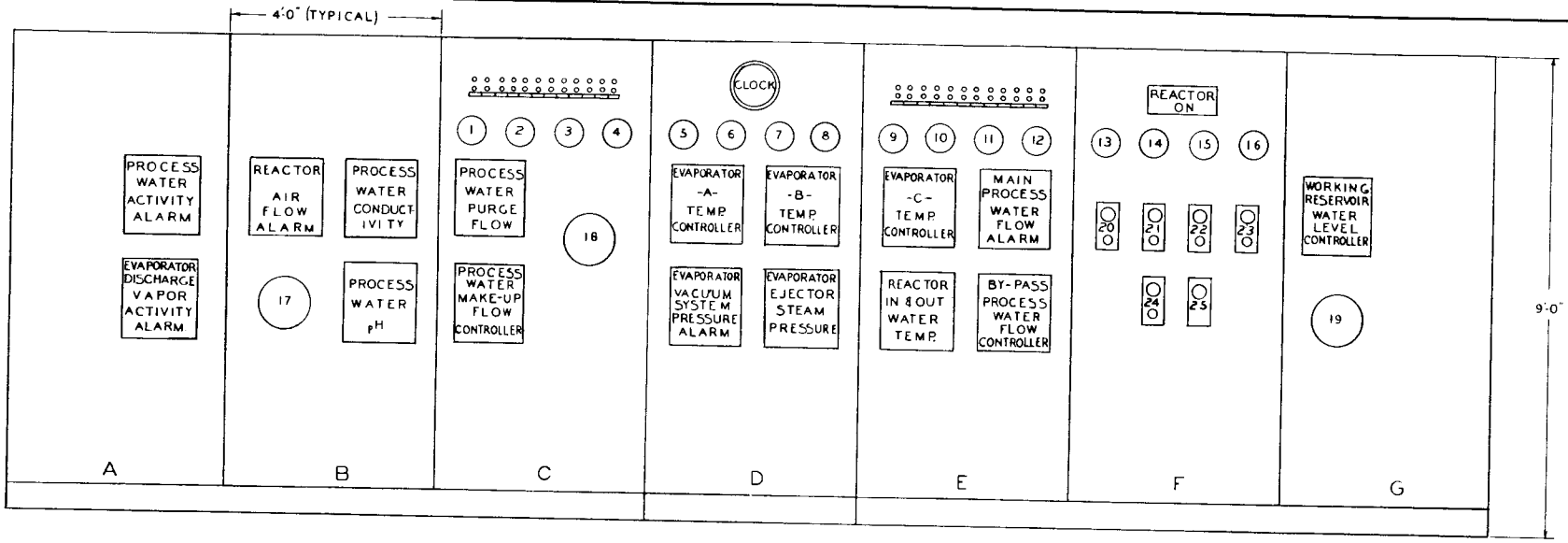

FUNCTIONS OF PRINCIPAL INSTRUMENTS

RECORDERS - AS INDICATED.

INDICATORS

1. INSTRUMENT AIR PRESSURE
2. STEAM SUPPLY PRESSURE
3. EVAPORATOR COOLING WATER PRESSURE
4. COOLING TOWER WATER TO EVAPORATORS - FLOW
5. EVAPORATOR -A- OPERATING PRESSURE
6. " " PROCESS WATER FLOW
7. EVAPORATOR -B- OPERATING PRESSURE
8. " " PROCESS WATER FLOW
9. EVAPORATOR -C- OPERATING PRESSURE
10. PROCESS WATER FLOW
11. BY-PASS STRAINER DIFFERENTIAL PRESSURE
12. MAIN " " "
13. WORKING RESERVOIR LEVEL (CHECK)
14. PROCESS WATER SUMP TANK LEVEL
15. " " SEAL " "
16. DEMINERALIZED WATER TANK LEVEL
17. " " BACK-UP-ACTIVITY
18. EJECTOR & EVAPORATOR TEMPERATURES
19. WORKING RESERVOIR LEVEL

CONTROL AND/OR POSITION INDICATORS — WATER TO REACTOR

20. PROCESS WATER- MAIN FLOW CONTROL VALVE
21. " -BY PASS FLOW SHUT OFF VALVE
22. " " -EMERGENCY RECYCLE VALVE
23. DEMINERALIZED WATER-EMERGENCY SUPPLY VALVE
24. PROCESS WATER - MAIN FLOW SHUT OFF VALVE
25. " " -BY-PASS FLOW CONTROL VALVE

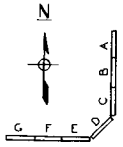

PLAN
INSTRUMENT PANELS

LEGEND

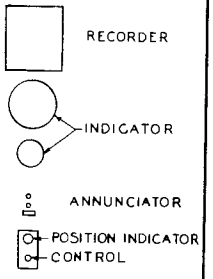

TOLERANCES: FRACTIONAL TOL. ± 1/64; DECIMAL TOL. ± .005; ANGLE ± 1/2°; ALL SURFACE TO BE FREE FROM BURRS AND SHARP EDGES; UNLESS OTHERWISE NOTED	APPROVED FOR CONST. / CHIEF ENGR. / CHIEF DRAFTSMAN / CHECKED / DRAWN F.T. 1-3-51 / DRAFT. HOTTER / REPRESENTATIVE LEVSE	ARGONNE NATIONAL LABORATORY. This drawing is the property of the Argonne National Laboratory. SCALE 1"=1' / DATE / NO. REQD.	SYM. / CHANGE / DATE / BY / PART PROCESS WATER BLDG. / PROJECT CONTROL & INSTRUMENT PANEL LAYOUT / SHEET / OF / DWG. NO. FIG. 5.8.B / ITEM NO.

Sag - power level at which sag relay returns controls from "run" to "start" when level sags below $10^{-3} N_F$.

Start - operation regime at levels below $10^{-2} N_F$.

Run - operation regime at levels above $10^{-2} N_F$.

Run auxiliary - subregime, under run, permitting raising of servo control point on motor-operated rheostat.

Shim rod - designation of shim-safety rods in their function of providing coarse control of reactor level.

Safety rod - designation of shim-safety rods in their function of safety shutdown (for dropping of rods, see "Scram").

Regulating rod - the servo-controlled rod provided for fine control of reactor level.

Setback - lowering of control point on motor-operated rheostat; "fast setback" takes the control point from N_F to N_L in 90 sec, "slow setback" in 7 min.

Reverse - continuous insertion of all shim rods.

Scram - dropping of one or more safety rods; "fast scram" is entirely by electronic action (hard tubes); "slow scram" involves electromechanical relays.

High - high-speed continuous withdrawal of all shim rods.

Intermittent - intermittent speed of withdrawal; all shim rods run for ½ sec, off for 4½ sec.

Low - low-speed continuous insertion or withdrawal of a selected single shim rod.

Jog - insertion of individual shim rods; one switch for each rod.

Inching - on-off manual use of "low" for fine adjustment of shim rod position; made possible by resistor in series with shim rod motors.

Cocked rod - fully withdrawn regulating rod cocked for safety (i.e., insertion) action.

Insert - to move in downward direction a shim-safety rod holder holding a rod.

Withdraw - to move in upward direction a shim-safety rod holder holding a rod.

Lower - to move in downward direction a shim-safety rod holder not holding a rod (i.e., empty). (*Note:* "Lower" is also used to mean change of servo control point by running motor-operated rheostat.)

Raise - to move in upward direction a shim-safety rod holder not holding a rod (i.e., empty). (*Note:* "Raise" is also used to mean change of servo control point by running motor-operated rheostat.)

Manual - operating regime which is manual in the sense that the servo is not operative and the status of the regulating rod does not affect shim rods.

Automatic - operating regime in which servo may be operative and shim rods may be affected by regulating-rod limit switches.

Sigma - sigma amplifiers feed safety signals to the sigma bus, which thus combines these signals and feeds them to the magnet amplifiers, all in parallel.

5.10 REFERENCE REPORTS

(1) Newson, H. W., *The Control Problem in Piles Capable of Very Short Periods,* MonP-271, April 21, 1947.

(2) Weinberg, A. M., *Physics Division Quarterly Report, Period Ending February, 1948,* CNL-35, March 26, 1948.

(3) Nordheim, L. W., *Physics Division Quarterly Report for Period Ending May, 1947,* Part VII-i, MonP-314, June 21, 1947.

(4) Mead, L. W., *Development of an Ionization Chamber Suitable for a High Flux Pile,* MonP-316, August 25, 1947.

(5) Weinberg, A. M., *Physics Division Quarterly Report, Period Ending February, 1948,* Part VII-e, CNL-35, March 26, 1948.

(6) Straus, H. A., *An Electrically Driven Servo for the High Flux Pile,* ORNL-2, December 17, 1948.

(7) Huffman, J. R., *et al., Feasibility Report on Clinton High Flux Pile,* MonT-433, December 1, 1947.

(8) Jordan, W. H., *et al., An Instrument for Measuring the Logarithm of Neutron Level and Period of Pile,* ORNL-110, November 23, 1948.

(9) Lansing, N. F., *Analytical Prediction of Ion Chamber Response to Step Discontinuity in MTR Power,* ORNL CF-50-2-32, February 8, 1950.

(10) Jenks, G. H., *et al., Calorimetric Calibration of a Graphite-walled, Cavity-type Ionization Chamber,* ORNL-923, January 23, 1951.

5.11 REFERENCE DRAWINGS

DWG. NO.	TITLE
	(ORNL Drawings)
Q-541-A, C, D, E, H, K, L, U, U_2, U_3, V, W, X, Y, Z	Al Amplifier
Q-751-A through E_2	Logarithmic Count Rate Meter
Q-889-1 through 6	Magnet Amplifier
Q-915-1 through 5	Log *N* Amplifier
Q-947-1 through 8	Sigma Amplifier
Q-975-1B through 6B	Neutron Chamber
Q-900-7	I.P.C. Connector Modifications for use with Gas Chambers
Q-995-1 through 4	Power Supply Compensated Ion Chamber
Q-1092-1	Fission Chamber
Q-1093-1,2,3	Period Amplifier
Q-1095-1 through 6	Servo Amplifier
Q-1045-1 through 6	Compensated Ion Chamber
	(Blaw-Knox Construction Company Drawings)
BKC-3150-803-11	Architectural - Control Room Details
BKC-3150-603-31	Reactor Control Board - Layout and Instrument Schedule
BKC-3150-605-1	Process Water Building - Control Board Layout and Instrument Schedule

Chapter 6*

CANAL AND CANAL HANDLING FACILITIES

The canal contains the equipment for the handling of assemblies discharged from the reactor and provides space for the storage of spent operating assemblies, irradiated materials, and internal parts of the reactor. Water over these materials protects the operating personnel against the hazards of radiation.

6.1 CANAL

6.1.1 General Description. The general layout of the canal is shown by Fig. 6.1.A. The main section of the canal is 8 ft wide and extends eastward from the east face of the reactor. The canal section that lies partially beneath the reactor west wall is 6 ft wide. Connecting the above two sections is a 7-ft-wide section through the sub-pile room. The 7-ft width of this section provides ample space for the canal unloading mechanism and storage of the neutron curtain.

The parapet around the canal is 10 in. thick at the bottom and projects outward at the top to a width of 13 in. This projection provides ample toe space and also gives the operator better stability when working over the parapet. The top of the parapet is 3 ft above floor level.

The bottom of the rabbit canal is 6 ft below the basement floor level while that of the main canal is 16 ft below the basement floor level. The water level in the canal is maintained 2 ft above the basement floor level, thus providing depths of water in the rabbit canal and main canal of 8 ft and 18 ft, respectively.

The depth of water in the canal is sufficient to adequately shield against the fission product gammas from the stored reactor fuel assemblies. The original calculations indicated that a water depth of 17 ft would be adequate in the spent fuel storage section of the canal. However, recent experiments conducted at ORNL gave results showing higher fission gamma energies and lower attenuations for a thick layer of water than those used for the previous

*ANL contribution.

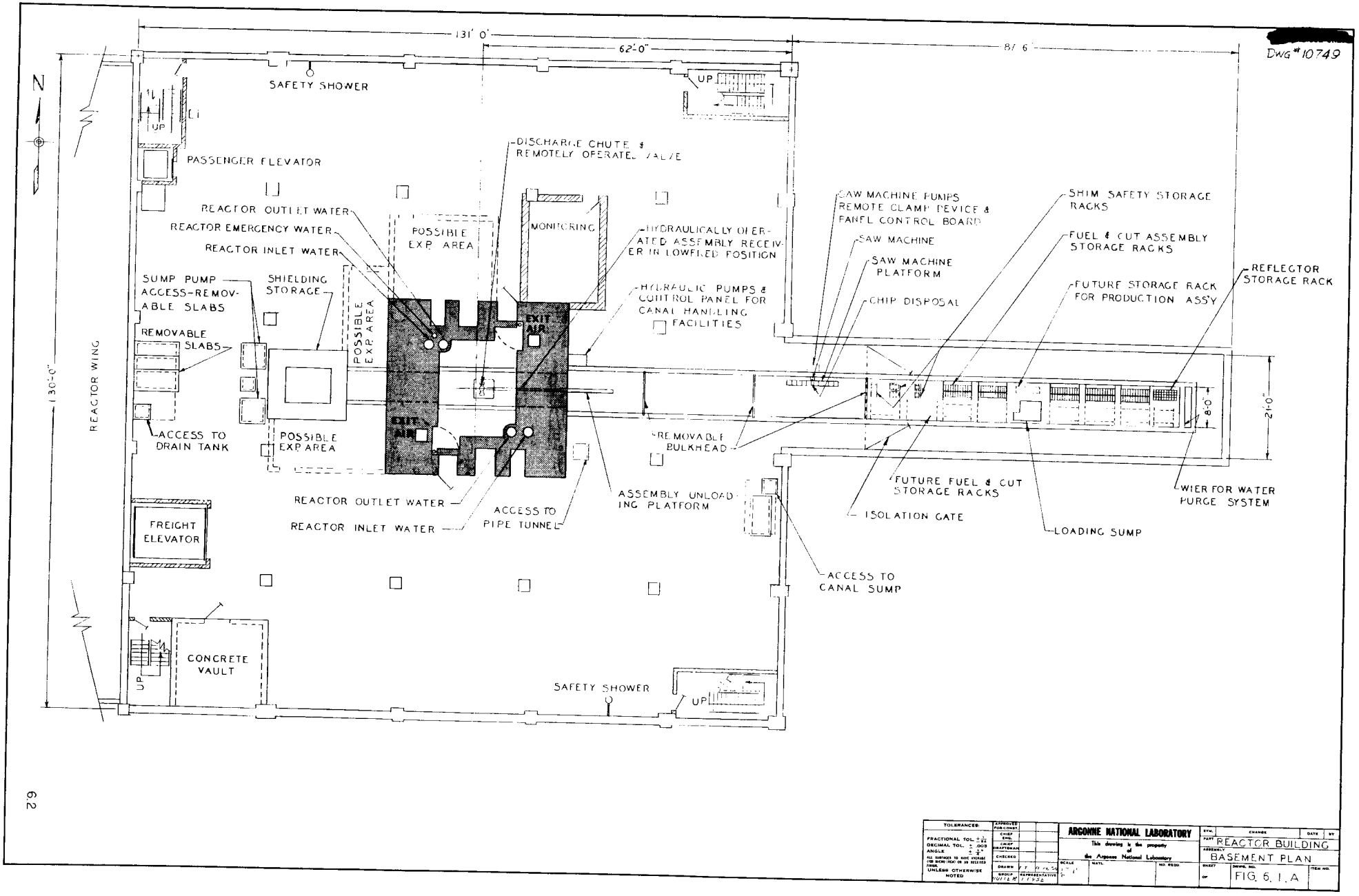
Dwg # 10749
131' 0"
62'-0"
87' 6"
130'-0"
21'-0"
8'-0"
N
REACTOR WING
SAFETY SHOWER
UP
PASSENGER ELEVATOR
DISCHARGE CHUTE & REMOTELY OPERATED VALVE
REACTOR OUTLET WATER
REACTOR EMERGENCY WATER
REACTOR INLET WATER
POSSIBLE EXP. AREA
MONITORING
HYDRAULICALLY OPERATED ASSEMBLY RECEIVER IN LOWERED POSITION
SUMP PUMP ACCESS-REMOVABLE SLABS
SHIELDING STORAGE
POSSIBLE EXP. AREA
HYDRAULIC PUMPS & CONTROL PANEL FOR CANAL HANDLING FACILITIES
EXIT AIR
REMOVABLE SLABS
ACCESS TO DRAIN TANK
POSSIBLE EXP. AREA
REMOVABLE BULKHEAD
SAW MACHINE PUMPS REMOTE CLAMP DEVICE & PANEL CONTROL BOARD
SAW MACHINE
SAW MACHINE PLATFORM
CHIP DISPOSAL
SHIM SAFETY STORAGE RACKS
FUEL & CUT ASSEMBLY STORAGE RACKS
FUTURE STORAGE RACK FOR PRODUCTION ASS'Y
REFLECTOR STORAGE RACK
FUTURE FUEL & CUT STORAGE RACKS
WIER FOR WATER PURGE SYSTEM
ISOLATION GATE
LOADING SUMP
REACTOR OUTLET WATER
REACTOR INLET WATER
ACCESS TO PIPE TUNNEL
ASSEMBLY UNLOADING PLATFORM
FREIGHT ELEVATOR
ACCESS TO CANAL SUMP
CONCRETE VAULT
SAFETY SHOWER
UP
TOLERANCES:
FRACTIONAL TOL. ± 1/32
DECIMAL TOL. ± .005
ANGLE ± 1/2°
ALL SURFACES TO HAVE AVERAGE (150 RMS) (RMS) OR 63 RMS FINISH
UNLESS OTHERWISE NOTED
APPROVED FOR CONST.
CHIEF ENG.
CHIEF DRAFTSMAN
CHECKED
DRAWN
GROUP REPRESENTATIVE
ARGONNE NATIONAL LABORATORY
This drawing is the property of the Argonne National Laboratory
SCALE
MATL.
NO. REQD.
SYM.
CHANGE
DATE
BY
PART
REACTOR BUILDING
ASSEMBLY
BASEMENT PLAN
SHEET
OF
DRWG. NO.
FIG. 6.1.A
ITEM NO.

calculations. The main canal water depth of 18 ft limits the radiation levels to 0.01 r per 8 hr at the surface of the water in the reactor basement and to 0.1 r per 8 hr in the storage area.

The attenuation calculations for the design of the canal were based on the following factors:

1. Assume there are no 3-Mev gammas after a 15-day decay period.

2. Assume that for short decay periods (less than 76 hr) 20 percent of the total fission product gamma energy is from 3-Mev gammas.

3. The self-absorption relaxation length for 3-Mev gammas is 15 cm.

4. The build-up factor is equal to $e^{0.17b}$ (b = shield thickness in relaxation lengths).

5. The absorption coefficient of concrete at 3 Mev is 0.05 cm^{-1}.

Outside the Reactor Building the canal has a 6-ft-wide working space on each side and at the end. To provide this working space there is a 13-ft-8-in.-high and 21-ft-wide tunnel over the canal. The tunnel extends 87 ft 6 in. beyond the Reactor Building east wall. The canal and tunnel are about 25 ft longer than had been planned originally. This provides additional storage space for spent assemblies in case the chemical process plants are not completed until several months after the MTR is in operation.

The ceiling of the canal tunnel is constructed of reinforced concrete and is slightly below ground level. The section of roof below the road is reinforced to accommodate heavy trucks and the motor crane used to lift the spent fuel assembly coffins. The unloading hatch is located in an offset widened portion of the road and is at a point where traffic has the least effect upon the unloading operation. The portion of canal roof designed to withstand heavy loads is separated from the remainder of the roof by curbing which extends 50 ft along each side of the road. This prevents vehicles from traveling on the lightly constructed portion of the canal roof.

The canal walls are made of reinforced concrete. The canal floor is designed to withstand a load of 1 ton per square foot; the unloading sump can withstand a load of 2 tons per square foot.

The canal walls are covered with 4-in.-thick, 8- by 16-in. white glazed structural tile while the bottom is lined with 4 in. of white concrete. This construction satisfies the requirements that there be good visibility in the canal, and that cracks from which radioactive water could leak out of the canal be kept to a minimum. Other methods of construction, which were considered as satisfying either of these requirements, are listed below with reasons for their rejection:

1. Incorporation of a waterproof membrane in the canal walls to prevent outward leakage of water was discarded since gamma radiations from the spent fuel assemblies in the storage area might cause deterioration and eliminate failure of the membrane.

2. Painting of canal walls to enhance visibility was rejected since peeling and blistering would occur.

3. Covering the canal walls with a thin layer of white cement to aid visibility was rejected because of the likelihood of spalling.

4. The use of concrete wall surfaces was discarded because of their susceptibility to the accumulation of radioactive contamination.

The canal storage area is separated from the remainder of the canal by a bulkhead and gates. The underwater section consists of several removable bulkheads extending from the canal floor to the water level. The section above the water is isolated by gates that swing from the walls and meet at the center of the canal. At the end of the canal the purge water discharges over a weir into the canal sump. Provisions are made for two additional removable bulkheads which permit division of the canal into three sections.

6.1.2 Canal Purge System. A flow of 100 gpm is maintained through the canal to avoid an excessive build-up of radioactivity and turbidity. A solenoid valve, which automatically closes in case of power failure, is installed in the well waterline at the inlet to the rabbit canal. This provision obviates the possibility of flooding the canal sump when an electrical outage causes the canal sump pumps to fail.

Water from the canal overflows a weir constructed the full width of the canal in the storage section, and flows through a discharge pipe to the canal sump. The purge water from the canal sump is pumped to the acid-treating unit for use as cooling tower make-up water, to the leaching pond, or to the retention basin, depending on the activity level. A radiation alarm is provided

in the sump, and manually operated valving for directing the flow is provided in the pump discharge header. A liquid-level controller governs the operation of the sump pumps.

6.1.3 Canal Flushing. Provisions are made for the future installation of two removable watertight bulkheads. These permit isolation of any section, except the rabbit canal, for cleaning and maintenance. Each section except the rabbit canal is provided with a drain and a waterline connection. The drains are interconnected in such a way that any section can be isolated and flushed. There are three adjustable overflow standpipes in the sub-pile room and rabbit canal sections. A continuous overflow to the reactor building process sump is maintained through these in order to prevent scum formation.

6.1.4 Heating and Ventilation of Canal Tunnel. The canal tunnel is heated and ventilated by air from a duct system that extends along one side of the tunnel ceiling. The air comes from the reactor building ventilation system. Since the air picks up negligible radioactivity in the tunnel, it is exhausted to the basement, where it mixes with the basement air before passing up to the reactor building first floor. There are six changes of air per hour in the tunnel. This number is required to prevent condensation due to variation of temperature in the canal tunnel.

6.1.5 Canal Lighting. Since the handling of assemblies in the canal is a manual operation carried on under 10 to 18 ft of water, it is necessary that good underwater lighting be provided. This lighting is supplied primarily by lights suspended from portable fixtures attached to the side walls of the canal. In addition to general overhead lighting supplied in the tunnel, special floodlights are provided in the loading platform area, canal storage area, sawing area, and loading sump.

6.1.6 Canal Crane. A manually operated crane with a 2 ton electric hoist is provided for the handling of heavy materials in the main canal. The highest hook position is 9 ft 9 in. from the floor. This provides a clearance of better than 6 ft between the hook and the top of the parapet. The hook cannot approach within 33 in. of one wall or 43 in. of the other wall of the canal tunnel. The maximum lift of the hoist is 25 ft 9 in.

6.2 UNLOADING MECHANISM

6.2.1 General Description. The function of the unloading mechanism is to receive the spent assemblies or control rods which have been lowered through the discharge chute of the reactor, rotate them from a vertical to a horizontal position, and eject them onto a receiving table at the bottom of the canal outside the sub-pile room shield. The assemblies are then removed from the receiving table and stored in racks at the far end of the canal. The complete mechanism includes the discharge tube, gate valve and safety devices, receiver, hydraulic seal, eject piston indicator, panel board, control valves, electrical interlocks, communication system, and assembly receiving table. The design is shown in Fig. 6.2.A.

The receiver is hydraulically operated and is a closed type, i.e., a seal and inward flow of water prevent any leakage of water from the reactor into the canal. It consists of a piston that operates in an assembly receiver cylinder. The piston performs the dual function of a receptacle for the several types of assemblies discharged from the reactor and of a means for ejecting the assembly onto the receiving table. The cylinder is open at the top and is supported near the closed bottom end by a trunnion shaft which is secured to the cylinder. The trunnion shaft bearings are carried in split bearing housings, the lower parts of which are cast integrally with the support base. The support base is bolted to a plate anchored in the canal concrete floor.

One end of the tipping cylinder pivots in a clevis which is cast as a part of the support base. The piston in the cylinder is fastened to a bell crank which is secured to one end of the receiver cylinder trunnion shaft. Orifices in the exhaust connections for the control valves govern the piston speed. The restriction of fluid flow by the orifices cushions the rise and fall of the receiver cylinder.

The hydraulic seal is fastened to the lower end of the discharge tube. It contains two hollow cylinders, of which one is stationary and one is movable. The stationary cylinder is the guide for the concentric movable cylinder. When the assembly receiver cylinder is in the vertical position, closing of the hydraulic seal joins the discharge tube and the receiver cylinder into a continuous passage. The closed gate valve in the discharge tube is

NOT CLASSIFIED

DWG. #10746

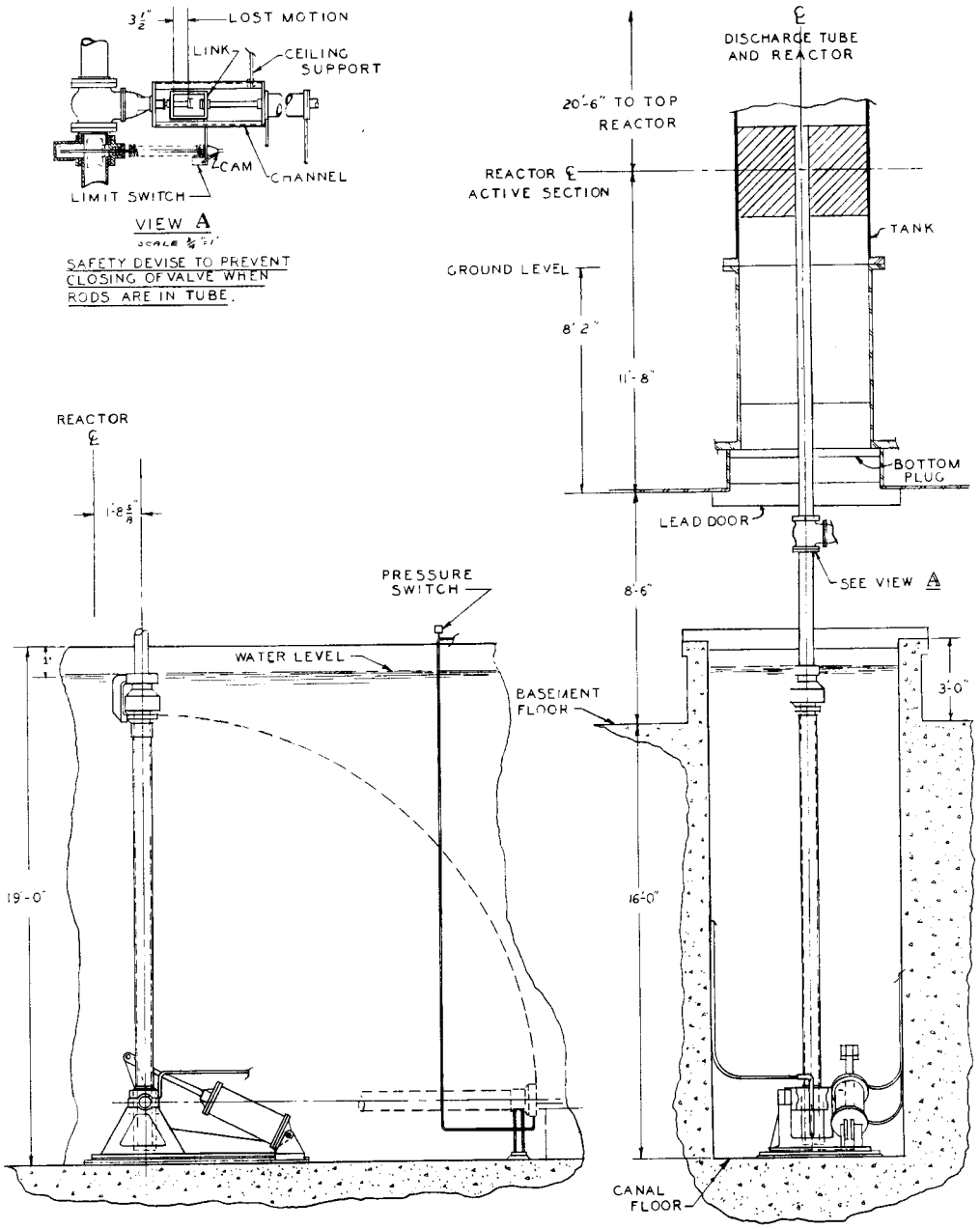

FIG. 6.2.A
UNLOADING MECHANISM

then the upper end of a sealed cylinder. This permits the eject piston to be raised or lowered by the operation of a four-way solenoid-operated valve. The valve piston closes all ports when in the neutral position and thus permits the eject piston to be locked in any position. A special Niagara water meter indicates the position of the piston in the receiver cylinder.

A purging line is attached to the upper end of the hydraulic-seal stationary cylinder. Water for this line is supplied at a pressure slightly greater than the head pressure in the reactor tank. This ensures a steady flow of water up the discharge tube once the remotely operated gate valve is open.

A mechanically operated open type receiver[1] was also considered but was discarded in favor of the hydraulically operated closed type.

6.2.2 Operation Sequence. The first step in the operation of the hydraulic unloading mechanism is to raise the receiver cylinder to its vertical position. In this position the remotely operated hydraulic seal at the lower end of the discharge tube may be closed; this joins the cylinder and the discharge tube into a single long fluid passage. Prior to opening the gate valve in the discharge tube, the piston may be raised or lowered to any desired position, depending on the type assembly to be received. This is accomplished by introducing demineralized water above or below the piston. The purge system is started before the gate valve is opened, and it is interlocked with the opening of the gate valve in order to ensure a flow of water up the discharge tube when the valve is open. After the gate valve is opened, the assembly being discharged is lowered into the receptacle in the piston, and the assembly handling rod is withdrawn. The gate valve is then closed, the purge stopped, the seal opened, the cylinder rotated to the horizontal position, and the assembly is ejected onto the receiving table. Finally, the assembly is picked up with long tongs or hooks and transferred manually to canal storage.

6.2.3 Control System. The operation of the reactor unloading mechanism is electrohydraulically controlled. The power that operates the mechanism is hydraulic. The flows in the hydraulic system are governed by solenoid-operated valves. The valve solenoids are operated by push-button switches in the various electrical control circuits. These circuits are interlocked by pressure switches, limit switches, and relays to ensure proper sequence of

operation. In order to keep electrical components out of the canal water, the various position switches are remotely mounted and are actuated by suitable hydraulic or mechanical linkages. Indicator lights and telephones are provided for the operators at the top of the reactor and at the control panel. The control panel is located at the canal, adjacent to the reactor, thus permitting observation of the ejection of assemblies onto the unloading platform. Diagrams of the control system and control board are shown in Fig. 6.2.B.

A pair of push buttons is provided at the control board for each of the following operations:

1. Elevating or lowering receiver cylinder.

2. Opening or closing of the seal at the discharge chute and receiver junction.

3. "Raising" or "lowering" of the eject piston in the receiver cylinder.

4. Purging of the discharge chute.

5. Opening or closing of the discharge chute gate valve.

The position of the eject piston in the receiver cylinder is indicated by a dial mounted on the control board. Indicator lights on the control board provide information about the other operations.

Suitable interlocks provide the following limitations on the operation of the equipment:

1. The push buttons to elevate or lower the receiver cylinder are inoperable if the seal is closed.

2. The seal can be closed only when the receiver is vertical.

3. The seal cannot be opened unless the gate valve is closed; this prevents reactor water from entering the canal.

4. "Raising" or "lowering" of the eject piston is permitted only when the receiver is vertical or horizontal; because of the characteristics of the unloading mechanism, "lowering" of the eject piston cannot be accomplished when the receiver is horizontal.

5. The purge can be turned on only when the receiver is vertical and the seal is shut.

NOT CLASSIFIED

Dwg. #10747

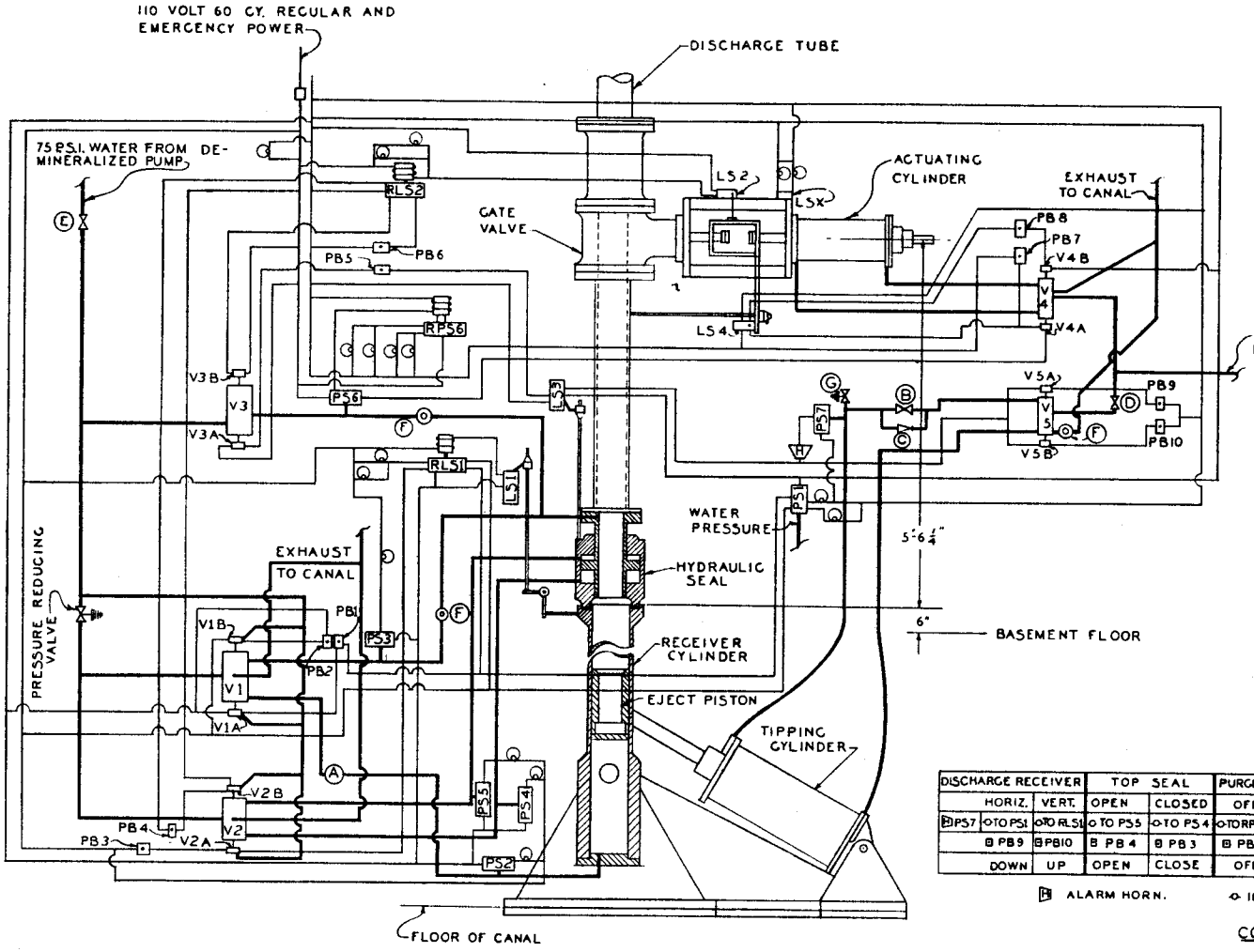

LEGEND

V = HYDRAULIC VALVE
PB = PUSH BUTTON SWITCH
PS = PRESSURE SWITCH
LS = LIMIT SWITCH
R = RELAY
Ⓐ = POSITION INDICATOR
Ⓑ = REDUCING VALVE
Ⓒ = CHECK VALVE
Ⓓ = FLOW CONTROL VALVE
Ⓔ = GLOBE VALVE
Ⓕ = ORIFICE
Ⓖ = RELIEF VALVE
Ⓗ = ALARM
═══ = HYDRAULIC CIRCUIT
——— = ELECTRICAL CIRCUIT
Ⓘ = LIGHTS

DISCHARGE RECEIVER		TOP SEAL		PURGING PRESSURE		5" VALVE Ⓓ		LOCATION OF EJECTOR PISTON	EJECTOR PISTON	
HORIZ.	VERT.	OPEN	CLOSED	OFF	ON	CLOSED	OPEN		UP	DOWN
Ⓗ PS7	○ TO PS1	○ TO RLS1	○ TO PS5	○ TO PS4	○ TO RPS6	○ TO PB8	○ TO PB7		○ TO PS2	○ TO PS3
⊟ PB9	⊟ PB10	⊟ PB4	⊟ PB3	⊟ PB6	⊟ PB5	⊟ PB8	⊟ PB7	BOTT. A TOP	⊟ PB1	⊟ PB2
DOWN	UP	OPEN	CLOSE	OFF	ON	CLOSE	OPEN		UP	DOWN

Ⓗ ALARM HORN. ○ INDICATING LIGHTS ⊟ PUSH BUTTONS

CONTROL BOARD

TOLERANCES	ARGONNE NATIONAL LABORATORY	SYM.	CHANGES	DATE BY
FRACTIONAL TOL. ± 1/32 DECIMAL TOL. ± .005 ANGLE ± 1/2° ALL DIMENSIONS IN INCHES UNLESS OTHERWISE NOTED	This drawing is the property of the Argonne National Laboratory		UNLOADING MECHANISM CONTROL SYSTEM	
DRAWN FT 11-12-54	SCALE — DATE — NO. WORK —	SHEET —	DRWG. NO. FIG. 6.2.B	SYM. NO. —

6. The gate valve can be open only when the purge is on.

7. A safety device prevents closing of the gate valve while any obstruction is within it.

6.3 CANAL STORAGE

The various types of assemblies discharged from the reactor are stored in racks bolted to the floor at the end of the canal. The racks are designed to facilitate easy insertion and removal by providing unrestricted sidewise accessibility. The short assemblies are stored vertically or inclined at a slight angle to the vertical, while the long rods are stored parallel to the canal floor or at an incline to the horizontal. The canal purge is utilized to cool the assemblies.

6.3.1 Beryllium Assemblies The storage of the beryllium reflector assemblies presents no problem except that they must remain adequately shielded. An aluminum rack provides for the storage of 36 of the assemblies.

6.3.2 Standard Fuel Assemblies The fuel assemblies are stored at a slight angle to the vertical.[4-9] An "A" frame, fabricated from stainless steel, provides for the storage of 28 fuel assemblies. The sides and back of the pocket for the assembly are lined with a 1/32 in. cadmium sheet. The front is open toward the side wall or center of the canal for easy accessibility. Four holes in the bottom of the pocket permit water to flow into the assembly to keep it cool by thermal siphoning. Five racks, providing storage for 140 fuel assemblies, are installed in one side of the canal. Expansion anchors are installed in the other side of the canal for future installation of fuel assembly racks. This additional storage may be required if the chemical process plant is not completed for several months after the MTR is in operation.

6.3.3 Shim-safety Rods The length of the shim-safety rod prohibits vertical handling unless shielding is provided in addition to that given by the canal water. To ensure thermal siphoning and adequate shielding, the rods are stored at a 15° angle to the horizontal.[2] They remain in this position until sufficient decay time has elapsed to permit the rods to be sawed into shorter lengths for transfer to decay storage or to chemical processing. The rods are stored with the bottom section at the lowest elevation. The canal purge dissipates the heat generated by the assemblies.

The racks for the storage of shim-safety rods are confined to groups of 16, four in a row and four tiers high. One rack is installed, while the future installation of racks in the other side of the canal is provided for by expansion anchors for the racks in the floor of the canal.

The rack consists of three sections, each of which is bolted to the canal floor and so located that the rod rests in all three. The end sections are *U* shaped to contain the rod and to permit easy insertion and withdrawal. The lower end section is closed at the bottom to stop the rod. The middle section supports the uranium section of the shim-safety rod. It is constructed in an angular shape and is lined with 1/32-in.-thick sheet cadmium to absorb neutrons.

6.3.4 Regulating Rods. Four regulating rods are stored parallel to the floor in *U*-shaped openings constructed at the bottom of the shim-safety storage rack. These openings are placed on the inside and outside of two adjacent shim-safety rods; this permits easy insertion and withdrawal of the rods.

6.4 ASSEMBLY DISPOSAL

6.4.1 Sawing Machine. The function of the sawing machine is to prepare the fissionable assemblies for transfer to the chemical processing plants. The conceptional design of the hydraulically operated sawing equipment is shown in Fig. 6.4.A. There is a sawing table with the necessary hydraulically operated locating devices and jigs for positioning and clamping of assemblies. The saw and its frame are clamped in a hydraulically operated reciprocating head which slides in a guide. The operating cylinder, control valves, and guide are attached to a long tube that fulcrums from a support bracket secured to the inside wall of the canal parapet. A hydraulic feed cylinder attached to the guide and a piston pushing against the canal wall and the guide provide the means to force the saw through an assembly. The saw, after sawing through an assembly, is returned to its starting position by a spring.

An electrically operated rotary sawing machine[1] was also considered but was discarded in favor of the hydraulically operated reciprocating type.

6.4.2 Chip Collector. A chip collector under the saw collects the heavy saw particles. The chips from this container will eventually be transferred out of the canal to a permanent disposal location. The diffusion of the

NOT CLASSIFIED

Dwg. #10748

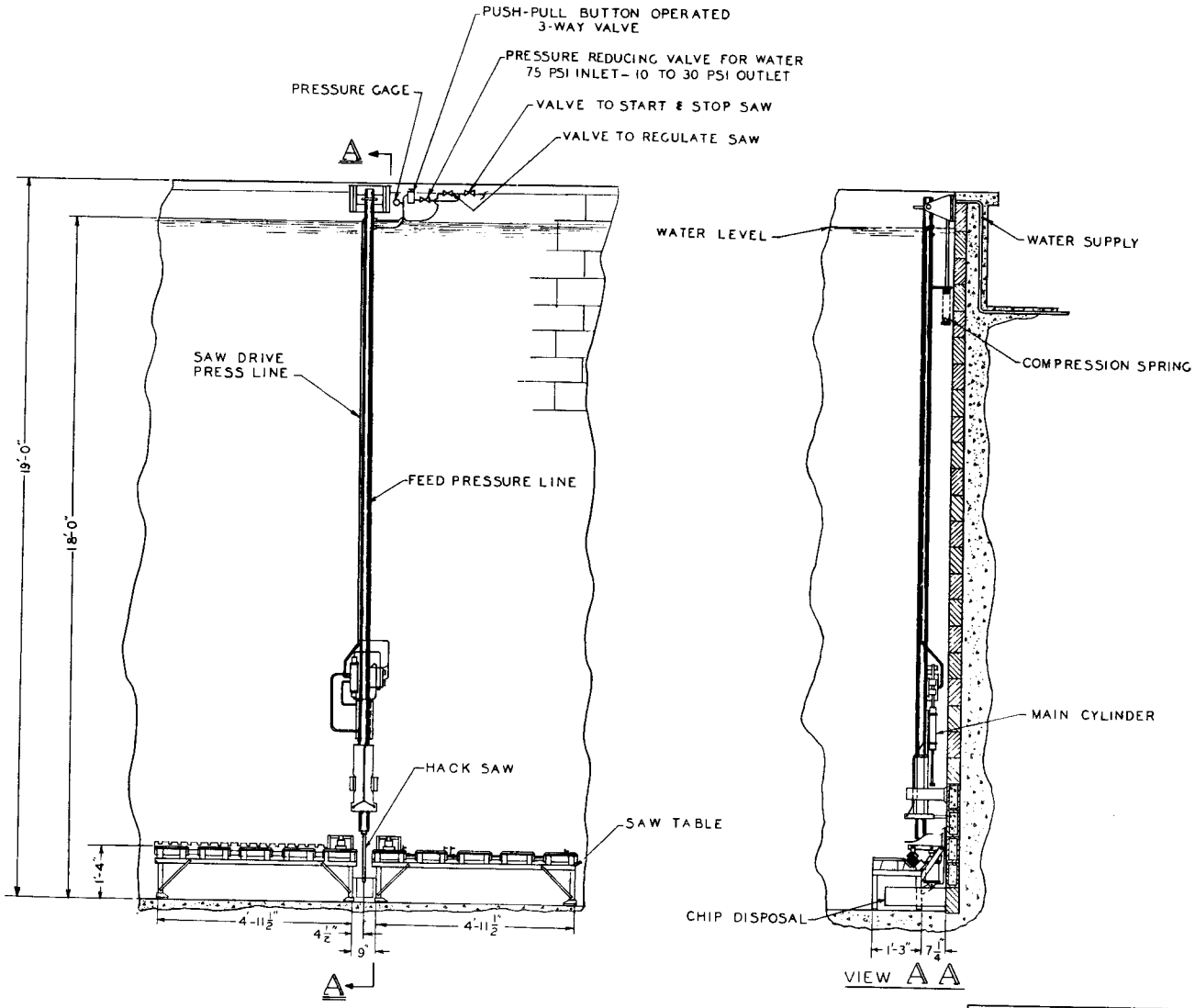

TOLERANCES: FRACTIONAL TOL. ± 1/32; DECIMAL TOL. ± .005; ANGLE ± 1/2°; ALL DIMENSIONS TO MAKE INTERIOR (OR INNER SIDE) OR AS INDICATED FIRST. UNLESS OTHERWISE NOTED	APPROVED FOR CONST. / CHIEF ENG. / ENGR. DRAFTSMAN / CHECKED / DRAWN K.T. 11-30-59 / GROUP HUTTER / REPRESENTATIVE LEVIE	ARGONNE NATIONAL LABORATORY. This drawing is the property of the Argonne National Laboratory.	SCALE 1/8" = 1' / MATL. / NO. REQD.	SYM. / CHANGE / DATE / BY / PART / ASSEMBLY SAWING MACHINE / SHEET / OF / DRWG. NO. FIG. 6.4.A / ITEM NO.	

light sawed particles in the canal water offers no problem in shielding. However, difficulties may arise in the accumulation of these light particles over a long period.

6.4.3 Transfer to Decay Storage. It is assumed that after a decay period of 21 days the fissionable material assemblies have decayed sufficiently for transfer from the canal to the chemical plants. This operation calls for the lowering of a carrier through an opening above the canal ceiling into a loading well in the canal floor. The various assemblies ready for transfer are loaded manually into the carrier in a vertical position. After four assemblies have been placed in the carrier or coffin, the cover is put in position and the carrier is lifted by a 20-ton motor crane onto a truck. No provision is made for water circulation in the carrier, since it is believed that thermal siphoning will be sufficient to cool the assemblies. A universal sized carrier for all assemblies appears practical as the sawed length of fissionable assemblies is the same.

6.4.4 Transfer Coffin. The thicknesses of lead walls required for a transfer coffin containing four irradiated fuel assemblies are computed to be 10.5 in. for the sides and 10 in. for the top and bottom.[10] The exposure from assemblies that have remained in the canal 15 days is then 0.04 r per 8 hr at the surface of the coffin.

The inside dimensions of the coffin are 12 in. square and 30 in. high. The inside is divided into four sections by steel plates covered with 0.002 in. of cadmium. The outside dimensions of the coffin, including the cover, are 32 in. square and 50 in. high. The corners of the coffin are rounded to the required shield thickness in order to reduce its weight.

6.5 REFERENCE REPORTS

(1) Nicoll, D., and Leyse, C. F., *Design Report No. 24, Canal and Canal Handling Facilities*, ANL-ABS-11.

(2) Leyse, C. F., *Cooling of Thorium Shim-Safety Rods in Canal*, ANL-ABS-10, November 16, 1949.

(3) Lennox, D. H., *Shielding of Fuel Assemblies in Canal*, ANL-EKF-4, August 12, 1949.

(4) Lennox, D. H., *Convection Cooling of Fuel Assemblies in the Canal*, ANL-EKF-5, September 20, 1949.

(5) Persiani, P. J., *Shielding of the Removable Beryllium Assemblies in Active Lattice*, ANL-EKF-10, October 14, 1949.

(6) Lennox, D. H., *Air Cooling of Fuel Assemblies*, ANL-EKF-15, November 23, 1949.

(7) Lennox, D. H., *Canal Water Heat Balance*, ANL-EKF-16, January 4, 1950.

(8) Lennox, D. H., *Decay Activity and Heat Generation Produced from Thorium Production Rods*, ANL-EKF-17, November 29, 1949.

(9) Lennox, D. H., *Danger of Fuel Assembly Cladding Failure with Natural Convection Cooling*, ANL-EKF-18, January 5, 1950.

(10) Lennox, D. H., *Fuel Assembly Coffin*, ANL-EKF-38, February 9, 1950.

6.6 REFERENCE DRAWINGS

(Blaw-Knox Construction Company Drawings)

DWG. NO.	TITLE
3150-570-1	General Arrangement of Submerged Saw for Storage Canal
3150-570-2	Main Frame and Drive Mechanism of Saw
3150-570-3	Submerged Design — Saw Guide and Frame
3150-571-1	General Arrangement of Reactor Discharge Mechanism
3150-571-2	Discharge Receiver Assembly
3150-571-3	Seal and 5-in. Valve
3150-572-1	Fuel and Cut Assembly Rack
3150-573-1	Removable Reflector Storage Rack
3150-574-1	Shim-safety Storage Rack
3150-579-1	General Arrangement of Main Canal
3150-903-44	Control Wiring for Discharge Mechanism