OAK RIDGE NATIONAL LABORATORY LIBRARY
3 4456 0022241 7

CENTRAL RESEARCH LIBRARY
DOCUMENT COLLECTION

ORNL-1492
Progress
4A

INSTRUMENT RESEARCH AND DEVELOPMENT

QUARTERLY PROGRESS REPORT

FOR PERIOD ENDING JANUARY 20, 1953

Oak Ridge National Laboratory
Research Library
4500N, MS-6191
LIBRARY LOAN COPY
DO NOT TRANSFER TO ANOTHER PERSON.
If you wish someone else to see this report, send in name with report and the library will arrange a loan.
ORNL-118(10-05)

OAK RIDGE NATIONAL LABORATORY
OPERATED BY
CARBIDE AND CARBON CHEMICALS COMPANY
A DIVISION OF UNION CARBIDE AND CARBON CORPORATION
UCC
POST OFFICE BOX P
OAK RIDGE, TENNESSEE

ORNL-1492

This document consists of 35 pages

Copy 4 of 314 copies Series A.

Contract No W-7405-eng-26

INSTRUMENT RESEARCH AND DEVELOPMENT

QUARTERLY PROGRESS REPORT

for Period Ending January 20, 1953

DATE ISSUED

MAR 11 1953

OAK RIDGE NATIONAL LABORATORY
Operated by
CARBIDE AND CARBON CHEMICALS COMPANY
A Division of Union Carbide and Carbon Corporation
Post Office Box P
Oak Ridge, Tennessee

OAK RIDGE NATIONAL LABORATORY LIBRARY

3 4456 0022241 7

INTERNAL DISTRIBUTION

1. C. E. Center
2. Biology Library
3. Health Physics Library
4-5. Central Research Library
6. Reactor Experimental Engineering Library
7-12. Central Files
13. C. E. Larson
14. S. Cromer (K-25)
15. L. B. Emlet (Y-12)
16. A. M. Weinberg
17. E. H. Taylor
18. E. J. Murphy
19. E. D. Shipley
20. C. S. Harrill
21. F. C. VonderLage
22. R. C. Briant
23. J. A. Swartout
24. S. C. Lind
25. F. L. Steahly
26. A. H. Snell
27. A. Hollaender
28. M. T. Kelley
29. K. Z. Morgan
30. J. S. Felton
31. A. S. Householder
32. C. E. Winters
33. D. W. Cardwell
34. E. M. King
35. L. M. Reynolds
36. W. J. Ladniak
37. P. R. Bell
38. C. J. Borkowski
39. W. M. Hurst
40. W. H. Jordan
41. R. S. Livingston
42. E. E. Fairstein
43. J. W. Morfitt
44. C. W. Sheppard
45. W. G. Stone
46. D. D. Cowen
47. C. P. Keim
48. C. D. Susano
49. P. M. Reyling
50. G. C. Williams
51. M. J. Skinner
52-53. J. V. Francis
54. R. F. Bacher (consultant)

EXTERNAL DISTRIBUTION

55-56. Ohio State University (Professor of Naval Science)
57. R. Hofstadter, Stanford University
58. J. C. Nance, Consolidated-Vultee Aircraft Corporation
59. J. A. Dever, Minneapolis-Honeywell Regulator Company
60-314. Given distribution as shown in TID 4500 under Instrumentation Category.

CONTENTS

Page

CHEMISTRY DIVISION 1

New Type of Multichannel Pulse Analyzer 1

Oscillograph galvanometer pulse analyzer 2

Description of circuitry 3

Simple Count-Rate Meter as a Storage Element for Multichannel Analyzers 5

Circuit Changes in Scintillation Spectrometer, Model Q-1151 6

Regulated Negative High-Voltage Supply 7

ANALYTICAL CHEMISTRY DIVISION 10

Analytical Instrumentation 10

Development of an automatically recording, internal-standard, flame photometer. III. Evaluation 10

Revision of gating circuit of ORNL model Q-945 automatic titrator 11

Revision of the ORNL model Q-983 automatic curve follower installed in a Q-1160 high-sensitivity polarograph 12

Analytical applications of high-frequency oscillators. II. ORNL Gridos 13

Microelectrode assembly for pH measurements 15

HEALTH PHYSICS DIVISION 16

Instrumentation and Techniques 16

Counting response of crystal spectrometer 16

INSTRUMENT DEPARTMENT 18

High-Voltage Accelerator Program 18

Stabilization of Mass-Analyzer Magnet Supply 18

Negative 5- to 7.5-kv, High-Voltage Supply (Q-1342) 18

Magnet Control (Q-1360) 19

Quantatron (Q-1361) 19

Remote Pipet Control 20

Pneumatic Wave Generator 20

Adaptation of Electronic $X-Y$ Recorder to Record Potentials Across a 1-Megohm Source 22

Instrumentation for Liquid-Metals Circulator 22

Universal Testing Panels for Measurement and Control of Time, Temperature, Pressure, and Electricity 24

Timing and electrical panel 24

Temperature measurement panel 26

Manometry panel 26

Pressure recording-controlling panel 26

Instrumentation for Gaseous Radiation Studies 26

A Cryostat Controller 27

Hydrogen-Oxygen Gas Detector 29

Thermal Control Valve for Low Flow Coefficient 29

INSTRUMENT RESEARCH AND DEVELOPMENT QUARTERLY PROGRESS REPORT

CHEMISTRY DIVISION

NEW TYPE OF MULTICHANNEL PULSE ANALYZER

C. J. Borkowski F. Porter
J. K. East

An ideal system for determining the voltage-pulse distributions from scintillation spectrometers, proportional-counter spectrometers, or pulse-ion-chamber spectrometers would measure the amplitude of every pulse from the detector with the required precision and sort these pulses into as many channels as may be required. In almost all applications, a multichannel analyzer with 50 to 100 stable channels would be a most useful instrument. To obtain this many channels, using conventional triggers and anticoincidence circuits to define each channel edge, imposes a rather difficult problem in keeping the channel widths constant and in keeping the equipment properly calibrated, aligned, and cooled.

In the new system described here, only one trigger is used regardless of whether there are 10 or 100 channels. Variations in the trigger sensitivity with time have a negligible effect on the channel widths. The principle of the system is as follows A cathode-ray beam is deflected vertically across a metal grid as shown in Fig. 1. The grid has 25 blank spaces and 25 webs of the same width as the spaces. Behind the grid is a Ag-Mg metal signal plate that is negative with respect to the grid and has a secondary emission ratio of about 4. A pulse is obtained from the signal plate each time the beam passes an opening in the grid.

To utilize the spaces, as well as the webs, as channels, it is necessary for the beam to return to the zero position. Thus, for full deflection, the beam would pass through 25 spaces on the rise of the pulse and 25 spaces on the fall, as a result, 50 pulses would be obtained from the signal plate, thus indicating that the pulse fell into the 50th channel. With this type of grid construction there are no gaps or overlapping of channels, and a maximum output signal is obtained. If the pulse fed to the deflection plates has a linear rise of 25 μsec and a linear fall of 25 μsec, the 50 pulses from the signal plate would each be separated by 1 μsecond. The dead time of the system would be 50 μseconds. Pulses from the signal plate pass to a trigger and a ring type of scaler that serves as the discriminator. The operation of the scaler-discriminator is described below. If a scaler pulse sorter with a dead time of 0.1 μsec were used, the over-all dead time of the 50-channel analyzer would be about 5 μseconds.

A grid and signal plate were inserted into a 5CP1 cathode-ray tube through slots as shown in Fig. 1. The signal-plate connection was made through a small hole drilled in the center of the face of the cathode-ray tube. When the vacuum was broken, the tube was filled with argon in order to prevent the deterioration of the cathode. Connection to the vacuum-pumping system was made through a $\frac{1}{4}$-in. copper tube that was threaded into the postaccelerator Kovar-metal connector. All joints were sealed with Araldite. Since the tube could not be outgassed by heating, it was permanently attached to a diffusion pump system, and a pressure below 10^{-5} mm was maintained. At a beam current of 1 μa, 20-mv pulses were obtained from the signal plate. The electron-beam spot size at this current was about 0.3 mm, which gave 6 spots per channel. A driver amplifier and pulse-shaping circuit designed by E. Fairstein allowed a 4-in. deflection to be used, thus giving 50 channels. Figure 1 shows a representation of the undifferentiated pulses from the signal plate as they appeared on an oscilloscope. The filament of the tube opened after about 100 hr of operation. Sufficient information was obtained on the stability of this type of tube to consider the manufacture of two such tubes by Dumont as soon as suitable grids are made.

The basic idea of measuring a beam deflection by means of a grid, as described, can be applied to the measurement of the energy of neutrons in a time-of-flight system. The synchronizing pulse from a neutron shutter, for example, would turn on

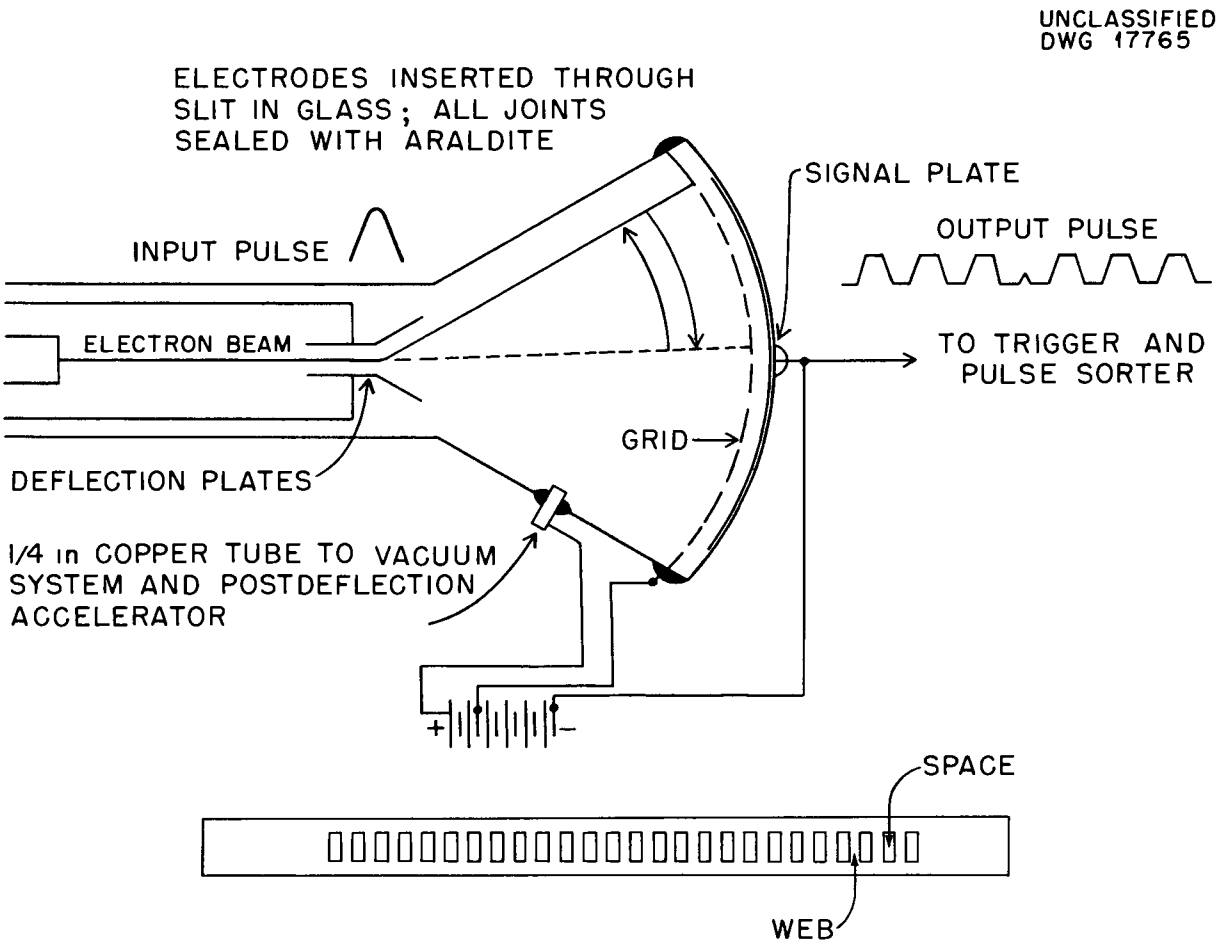

Fig. 1. Cathode-Ray Tube Multichannel Analyzer.

the cathode-ray beam that is driven by a linear-rising triangular pulse. The pulse from the neutron detector would turn off the beam. The number of pulses obtained from the signal plate would determine the time of flight of the neutron, that is, its energy. By this method, stable time channels 0.1-μsec wide could be used.

Oscillograph Galvanometer Pulse Analyzer. The same principle of measuring a deflection voltage by means of a grid structure has been applied to a Hathaway, high-speed galvanometer (Fig. 2). The undamped natural resonant frequency of this galvanometer is 10,000 cycles per second. Electromagnetic damping of such a galvanometer is small, so viscous fluid damping is employed. Thus the galvanometer is always correctly damped, regardless of the circuit in which it is used. The damped resonant frequency is 4000 cycles per second.

The galvanometer is a bifilar type with a small mirror that normally is used to reflect a beam of light onto a moving chart of photosensitive paper or film in an oscillograph. In the present application, the beam of light is allowed to sweep across a grid similar to the one shown in Fig. 1 except that it was made by photographic reproduction. Behind the grid is a photomultiplier. The number of light pulses obtained determines the channel into which the pulse will fall.

When the galvanometer is driven with a square pulse of 20-μsec duration, the galvanometer will rise in 30 μsec and fall in 50 μseconds. With this pulse duration, the galvanometer does not reach the peak d-c level of the square pulse, but its deflection is linearly proportional to the amplitude of the driving pulse. A pulse about 90-μsec wide is required for the galvanometer to reach full d-c

Front plate and moving element

Fig. 2. Hathaway Oscillograph Galvanometer.

amplitude. Under the fastest operating conditions, the galvanometer pulse analyzer may measure and sort the amplitude of 10,000 pulses during 1 second.

The resistance of the galvanometer is 0.7 ohm, and the deflection sensitivity is 1 mm/50 ma for a 20-cm optical-beam length. At this distance, the smallest effective spot diameter is 0.25 mm. With four spots per channel, more than satisfactory stability of operation is obtained. A 20% change in trigger sensitivity produces less than a 1% change in channel width. A total of fifty 1-mm channels can be obtained with a 10-deg deflection of the mirror. It is of interest to know that the saving in time amounts to only a factor of 2 when an analyzer with an infinitely short resolving time is used in place of an analyzer that has a resolving time of 100 μsec, when the integral counting rate in the main amplifier is 10,000 counts per second. Since the new system is capable of having many more channels with fewer tubes, less components, and smaller power requirements than the conventional types, a net saving in time is possible at these counting rates. At lower counting rates, the saving in time is even greater.

Since the dead time of the present galvanometer analyzer is 150 μsec, a storage system that also has this dead time can be used without the necessity of corrections for coincidence loss. The longer dead time allows other types of storage systems to be considered, for example, the single-tube thyratron rate-meter circuit that consumes a total of 1 watt of filament and plate power per storage channel and has no zero drift. Its resolving time is 80 μseconds.

An interesting application of this type of analyzer is that the average energy of a spectrum can be obtained by using two scalers. One scaler records the total number of events accumulated and the other scaler, which is connected to the photomultiplier, records the total energy in the accumulated events. Dividing one by the other gives the average energy per pulse.

Description of Circuitry. A number of analyzer systems have been constructed that use the Hathaway galvanometer as the deflection device. The system shown in Fig. 3 is the result of considerable refinement of previous systems. It is especially designed for the fast-response galvanometer. Impedance-matching devices such as the cathode follower are omitted in an attempt to simplify the system diagram. Since it is desired that the analyzer operate at 100% duty cycle without distortion of the pulse amplitude spectrum, it is necessary to use direct coupling in most cases. In order that the biased diode may charge the pulse-shaping network to the peak amplitude of the applied pulse, it is necessary to lengthen the A-1 amplifier pulse by changing the delay line in the A-1 from 1.0 to 1.2 μseconds. This change is necessary because the high-frequency response of the system is decreased by the insertion of the amplifier-gating circuit. Since the response time of the galvanometer for large pulses is approximately 50 μsec, it is necessary to lengthen the 1.2-μsec A-1 amplifier pulse. The first pulse-forming network in conjunction with the biased diode develops a pulse with a pulse rise that is the same as the A-1 pulse, and the fall is that of a parallel RC circuit with slightly less than critical inductance in series with the resistance. The pulse returns to the base line in approximately

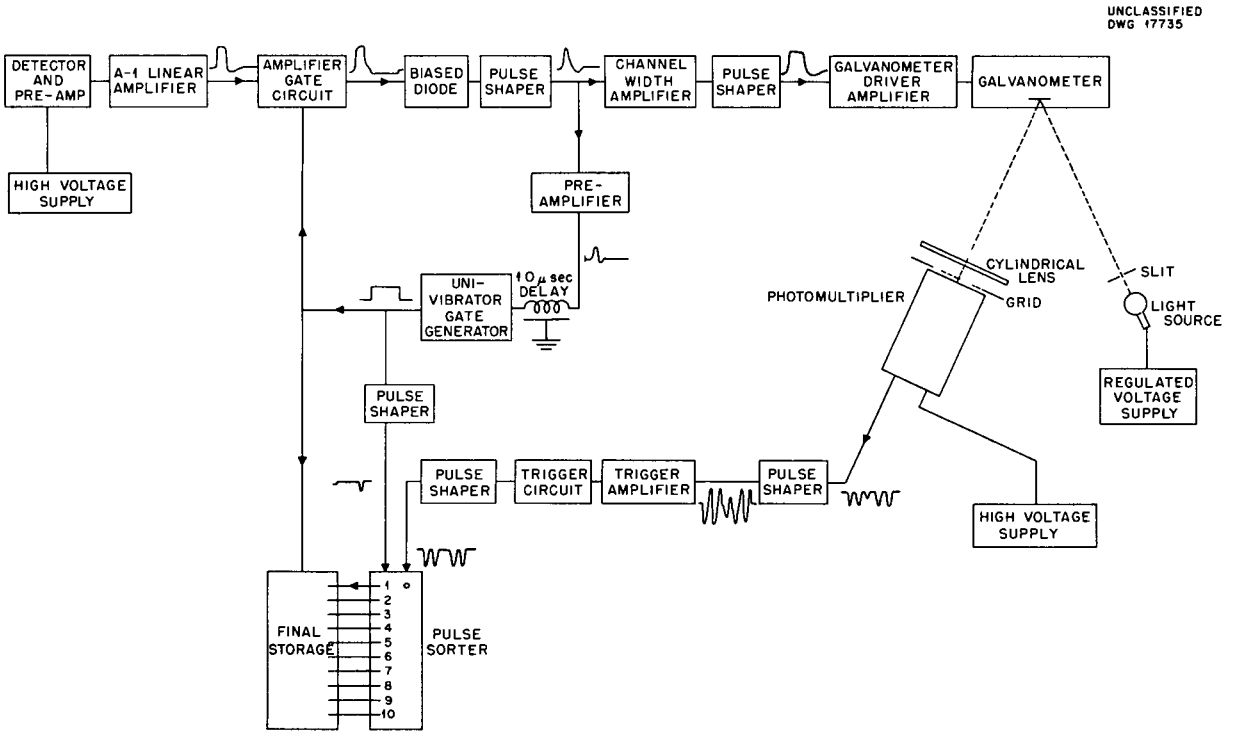

Fig. 3. Block Diagram of Galvanometer Pulse Analyzer.

50 μseconds. The amplitude of the pulse is that portion of the A-1 amplifier pulse that exceeds the bias level of the diode. The biased diode enables a choice to be made of the portion of the pulse spectrum to be analyzed.

Since it is desirable to control the fraction of the pulse spectrum that falls into each channel, a channel-width amplifier is used, following the first pulse-shaping network. A second pulse-shaping network, which clips off the top 20% of the pulse, is placed in the output of the channel-width amplifier. This results in an output pulse that approaches a square pulse, which gives the most rapid response for a given peak current and pulse width when applied to the galvanometer coil. The shaped pulse gives one channel deflection for 50 ma of peak current.

Because of the low galvanometer resistance (approximately 0.7 Ω) and high peak current requirements, considerable difficulty was experienced in finding an efficient system for driving the fast-response galvanometer. A push-pull audio transformer was used, although it did not furnish an efficient match and resulted in an impractical driver amplifier. Because of the good low-frequency response of the transformer, only a short-duty cycle could be used without distortion of the pulse-amplitude spectrum. To achieve a high duty cycle, a direct-coupled current amplifier with sufficient feedback to give approximately unity gain is used in the present system.

In order that the pulse spectrum may not be distorted, it is necessary that a second pulse be prevented from entering the analyzer within its recovery time, which is 150 μseconds. This is accomplished as follows Any pulse that exceeds the bias level of the diode by a few tenths of a volt is amplified by the preamplifier, delayed 1 sec to allow the A-1 amplifier pulse to reach its peak height, and then applied to the univibrator that generates a gating signal that closes the gate between the A-1 amplifier and the biased diode. This pulse is also usedto turn off the final storage while the A-1 amplifier pulse amplitude is being determined. The trailing edge of the gating pulse is used to reset the pulse sorter, thus transferring information from the sorter to the final storage.

In this system where the number of pulses obtained from the photomultiplier is proportional to the pulse height being measured, it is necessary

that the circuitry following the photomultiplier be capable of handling a large number of pulses spaced approximately 1 μsec apart. This spacing varies with the amplitude of the measured pulse.

Two methods were used to convert the current pulse obtained from the photomultiplier into a voltage pulse. One method was to pass the current through a resistor, a second method was to pass the current through an inductance with slightly less than critical damping. In each case, it is desired to minimize the shunt capacity in order to obtain maximum-amplitude voltage pulse. It is also desirable to present a positive pulse to the trigger circuit. Therefore a plate amplifier with a feedback gain of 4 is used to transfer the voltage pulse to the trigger circuit. The trigger circuit is a level-setting device that determines into which of two channels a pulse will fall if it is on an edge of a channel. A pulse-shaping network that is capable of driving the pulse sorter is placed in the output of the trigger circuit.

The pulse sorter used in this system is a ring scaler that is normally conducting at the zero position. When a pulse is applied to the pulse sorter, the conducting state advances one position or channel. For example, a pulse from the A-1 amplifier produces a number of pulses proportional to its amplitude, and, in turn, the sorter is advanced an equal number of channels. When the reset pulse is applied, the sorter is returned to the zero position, and a pulse is transferred from its temporary storage in the sorter to the final storage unit. Each channel of the final storage is connected to its appropriate channel in the sorter. It should be recalled that the final storage gate was opened at the instant the reset pulse was applied. At this time, the amplitude of the pulse from the A-1 amplifier has been recorded, and the system is ready to receive a second pulse. The recovery time of this system is 150 μseconds. The final storage used in this system was 10 scales of 8 with a Veeder-Root recorder.

The results of a series of measurements of the C^{137} gamma-ray distribution with this analyzer are shown in Table 1. Although the analyzer has not been in operation sufficiently long to obtain long-time stability data, the drift in 24 hr is a small fraction of 1% in the energy axis, and no drift was observed in the channel width.

SIMPLE COUNT-RATE METER AS A STORAGE ELEMENT FOR MULTICHANNEL ANALYZERS

J. Eddlemon C. J. Borkowski

The counting-rate meter described (Fig. 4) is being considered as a possible storage element for a 50-channel galvanometer pulse analyzer. Only one tube per storage channel is used, and the total power consumption is 1 watt. The resolving time of the rate meter is 80 μseconds. The information from each storage channel will be plotted on a Brown recorder. Consideration is being given to an oscilloscope display of the 50-channel spectrum by use of a telemetering commutator that will sweep the information from the 50-channel storage.

TABLE 1. EFFECT OF GATING THE AMPLIFIER ON PERFORMANCE OF GALVANOMETER MULTICHANNEL ANALYZER WITH A 661-kev GAMMA-RAY SOURCE IN A SCINTILLATION SPECTROMETER

TYPE OF ANALYZER	CONDITION OF GATE CIRCUIT	INTEGRAL COUNTS PER SECOND	FULL-WIDTH HALF-HEIGHT (%)	PEAK-TO-VALLEY RATIO
Fast single channel	None	400	8 0 ± 0.3	42
		2500	8 0 ± 0 3	42
Galvanometer multichannel	In	400	8 0 ± 0 3	44
		2500	8.0 ± 0 3	44
	Out	400	9 5 ± 0 3	24
		2500	12.0 ± 0 3	10

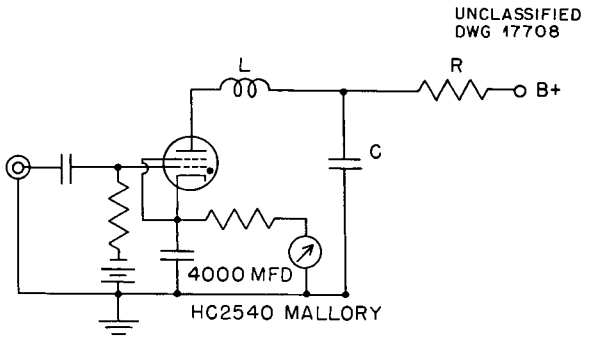

Fig. 4. Simple Count-Rate Meter.

The problem of utilizing electrical pulses to indicate counting rates resolves itself into transferring a fixed amount of energy per pulse to the indicating element. This requirement necessitates the use of pulse-shaping and pulse-limiting stages in order that a fixed charge will be transferred to the indicating circuit with each input pulse. The gas tetrode, with associated elements, meets the requirement and obviates the necessity of special stages for pulse shaping and limiting.

A 5696 miniature gas-tetrode is used in the present circuit, this tube was chosen because of its low filament drain (150 ma) and fast deionization time (approximately 25 μsec). Essentially, the basic circuit is a simple relaxation-oscillator type of circuit with the thyratron biased beyond cutoff, it is quite similar to the 2050 rate meter.[1]

The capacitance *C* in the plate circuit and the plate-supply voltage minus the tube drop determine the amount of charge to be transferred with each incoming pulse, thus the range of the count-rate meter can conveniently be changed by switching the amount of capacitance in the plate circuit. When the tube fires, the charge from plate capacitor *C* is transferred to the damping capacitor, 4000 μf, in the cathode return. This charge, in turn, flows through the meter, thus giving an indication of rate. During the time of conduction, plate resistor *R* serves to isolate the circuit from the *B* supply, and after deionization, it provides a charging path for the plate capacitor.

In order to use a long time constant in the meter circuit and still realize good linearity, it is desirable to use a high supply voltage. For the present, 300 volts is used in the supply. To quench the tube without using a plate resistor of prohibitive value when applying this potential, it is necessary to include a small inductor in the plate circuit, this also serves to limit peak plate current to a safe value. The value of inductance should be such that the time of one cycle at the resonant frequency of the inductor *L* and capacitor *C* is greater than the deionization time of the tube. Thus, the tube is allowed to conduct for no more than one-half cycle of the resonant frequency before the plate is driven negative. One disadvantage of this method is that the tube can conduct continuously if plate voltage is applied before grid bias is present.

The tube drop apparently varies with change in filament voltage, with a regulated plate supply of 300 volts, a 5% change in line voltage results in a 2% change in output. Operation from a regulated line precludes this source of error. Between shield grid and cathode, there exists a convection current of approximately 10 μa during the quiescent state, thereby making it desirable to tie this grid to the cathode rather than to ground or to some other bias point.

An obvious and highly important advantage of this type of circuit, when working at low counting rates, is that there is no zero drift in the output circuit. There is a small drift in plate-voltage drop during the first week of operation of a new tube, however, after this aging, the tube apparently stabilizes.

In testing for variation with different 5696's, the maximum change in output was 4% for eight tubes tried.

CIRCUIT CHANGES IN SCINTILLATION SPECTROMETER, MODEL Q-1151

E. Fairstein

The scintillation spectrometers used in the Chemistry Division have the ORNL model Q-1151 amplifier-discriminator as one of the components. Drifts in the discriminator that result from grid current in the 404 A tubes have proved to be a continuing source of trouble.

A circuit change in the output stage of the amplifier that greatly reduces the effects of grid current is shown in Fig. 5. This change is simple to make and should be incorporated in all instruments of this type presently in use.

As is shown in the diagram, the pulse-height selector control circuit is transferred from the 404 A input to the input of a cathode follower.

[1] C. J. Borkowski and C. R. Marsh, *"Poppy" – Pulse-Type Detector for Alphas, Betas, Gammas, and Neutrons*, CP-3316 (June 30, 1945), Sketch Q-299F.

UNCLASSIFIED
DWG 17648

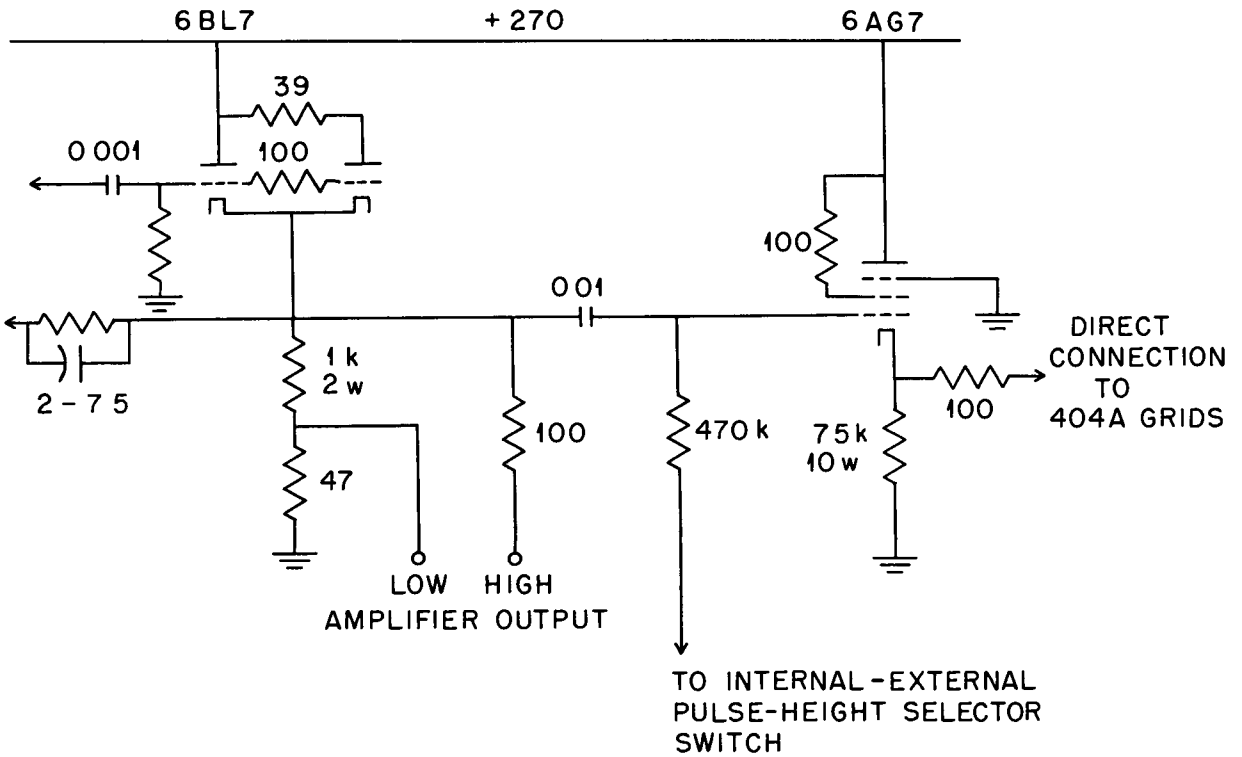

Fig. 5. A1 Amplifier-Output Circuit Modifications.

The 404 A grids are then directly connected to the cathode follower output. This change does not eliminate the grid current, but it greatly reduces its effect. The cathode follower has an impedance more than 200 times lower than that of the pulse-height selector circuit and can therefore prevent shifts in 404 A grid bias.

REGULATED NEGATIVE HIGH-VOLTAGE SUPPLY

E. Fairstein H. J. Hurst

A regulated negative high-voltage supply was designed, built, and tested. The voltage range is 0.5 to 4.5 kv at a maximum load current of 3 ma. Noise and ripple vary from 0.25 volt at 500-volts output to 1.5 volts at 4.5 kv. The regulation is such that line-voltage changes are reduced by a factor of about 100. The drift in voltage is approximately 0.1% per 24 hr, short time drifts are about 0.5%.

The circuit is shown in Fig. 6. The added complexity that results from the use of a constant current tube in place of the usual load resistor for the shunt regulator more than pays for itself in improved performance, and is an innovation that can be used to advantage in lower voltage supplies, as well.

A triple-step generator was designed, built, and tested. It will be used for determining the resolving time of amplifiers, discriminators, scalers, etc. A block diagram appears in Fig. 7.

The main signal output consists of a negative going staircase wave. Each of the steps has a rise of 0.04 μsec and a fall of 2000 μsec, which simulates the signals obtained from a radiation detector. The leading edge of two of the steps can each be continuously delayed with respect to the first step. The range is 0 to 1 msec in three decade ranges. The amplitude of each of the steps is adjustable from 0 to 1 volt. The output is designed to operate into a 100-ohm load.

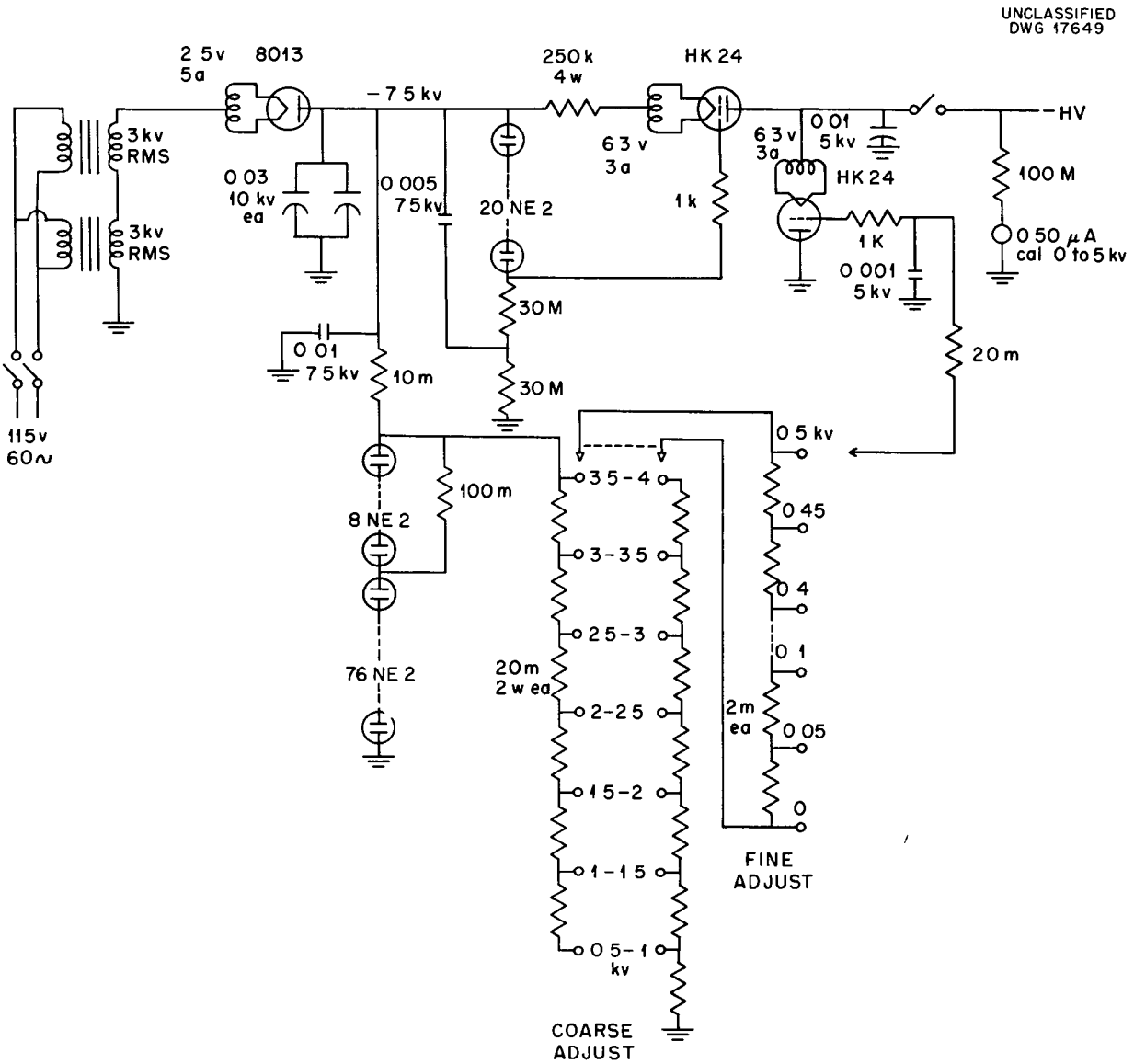

Fig. 6. Regulated Negative High-Voltage Power Supply.

The auxiliary signal outputs consist of pulses. One output is provided to trigger an oscilloscope sweep. It can be delayed or advanced with respect to the first step of the main output. The remaining outputs are from each of the three step generators and are in time coincidence with their respective steps.

The operation of the instrument is as follows A linear sweep is generated from the power line or from an external triggering source. The sweep voltage is applied to four Schmitt triggers that can be biased for different triggering levels. The adjustment of these bias levels is the means for determining the time separation between pulses. Three of the triggers are used for generating main signal steps. The individual steps are combined in a linear mixer to give the output signal. The fourth trigger is used for initiating the sweep in the oscilloscope that will usually be used in association with the generator.

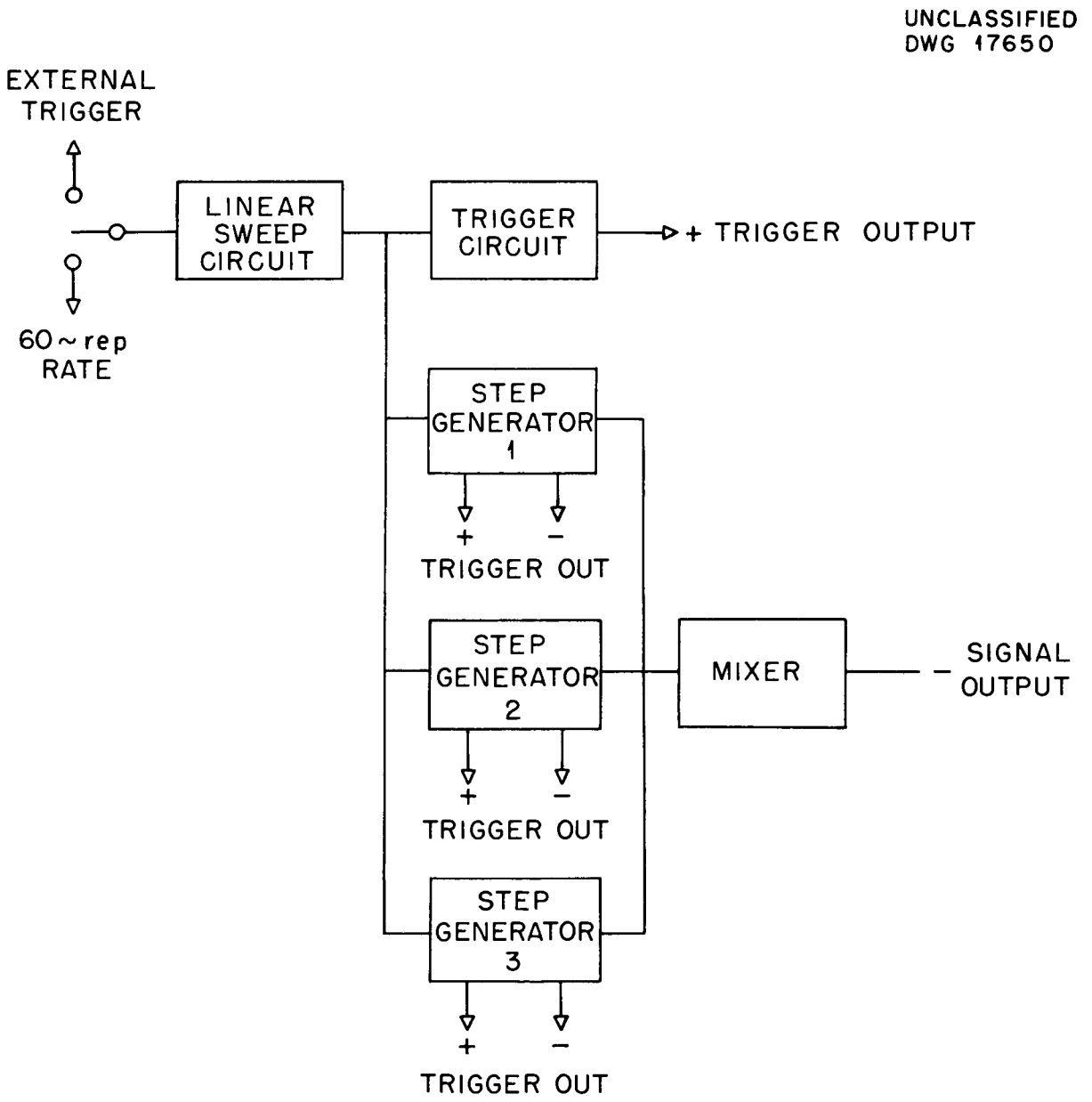

Fig. 7. Triple-Step Generator.

ANALYTICAL CHEMISTRY DIVISION

ANALYTICAL INSTRUMENTATION

D. J. Fisher H. L. Hemphill

Development of an Automatically Recording, Internal-Standard, Flame Photometer. III. Evaluation (M. T. Kelley, D. J. Fisher, H. L. Hemphill, N. D. Lee, C. Feldman, W. Pruessner). The automatically recording, internal-standard, flame photometer that is being developed has been discussed previously.[1,2] Functional diagrams that illustrate the principles of operation of the ratio-and-control circuit have been prepared. The operation of the circuit that is used for recording the single-beam, photomultiplier output for the internal standard is shown in Fig. 8, where it can be seen that the Brown recorder functions as a millivolt recorder in the usual manner. Figure 9 shows the principles of the double-beam operation of the flame photometer. In the double-beam operation, the balance slidewire of the Brown recorder is not used. In its place, a helipot slidewire that is geared to the bull gear of the recorder functions as the recorder-balance slidewire. The Brown servo balances the signal from the sample photomultiplier against the reference signal from the internal-standard photomultiplier. The Brown recorder therefore records the ratio of the output of the sample photomultiplier to the output of the internal-standard photomultiplier.

The optical system of a model B Beckman spectrophotometer is now used as a sample monochromator. At first, a composite, glass filter was used for the monochromator of the internal standard. It appeared that heating of this filter caused considerable long-term recorder drift. An interference filter was chosen to transmit the desired internal-standard emission line and has proved to be a superior filter for this application. The filter reflects rather than absorbs the light that it does not pass. A Bausch and Lomb, wedge-type, interference filter has been obtained, and a positioning device is being built so that the filter may be used as the monochromator for the internal standard. At a later time, the model B Beckman spectrophotometer may be replaced by a similar wedge-type monochromator, designed so that both photomultipliers see the flame under like conditions.

In the instrument as it was first built, no special precautions were taken in mounting the 1P21 photomultipliers. Several suggestions were offered by P. R. Bell, Jr. of the Physics Division regarding remounting of the photomultipliers in the photometer. These suggestions were followed, and increased stability of the output of the photomultipliers resulted. Several 1P21 tubes were found to be too noisy, however, they were not new tubes. Ground-glass diffusing screens were added to ensure that the light from the monochromators is spread out over the photocathodes. It was found that prior deaeration of test solutions by heating resulted in improved steadiness of the output of the internal-standard photomultiplier and in a somewhat steadier output ratio.

Although the voltage supplied to the photomultipliers has large effects on the output of a single photomultiplier, the double-beam ratio is insensitive to fairly wide variations in the voltage supply. Both r-f type and series voltage-regulator-tube type of regulated-negative-voltage supplies were tried. It was found that the latter type, such as the ORNL model Q-1210, is adequate.

Observations of the effect of instrument modifications on the stability of the output of the photomultipliers were made by means of a light bulb that was maintained at a constant voltage and mounted at the flame position. The stability was also checked by setting both monochromators to the emission line-pair of sodium and burning a solution that contained about 15 ppm of sodium. It was found that the double-beam ratio was insensitive to changes in light-bulb intensity. After a 30-min warmup period of the instrument as it was first constructed, the ratio of the photomultiplier outputs drifted as much as 6% in 10 minutes. After a 20-min warmup of the present photometer, the ratio of the photomultiplier outputs is within 1% of its final value. The amount of drift is decreased if a longer warmup period is used. For example, the present photometer drifts less than ½% after a 30-min warmup, whereas the photometer as first constructed drifted several per cent during the second hour.

(1) M. T Kelley and D. J Fisher, *Anal Chem Quar Prog Rep June 26, 1952*, ORNL-1361, p. 4.

(2) M. T. Kelley and D. J. Fisher, *Anal Chem Quar Prog Rep Sept 26, 1952*, ORNL-1423 (in press).

UNCLASSIFIED
DWG 18018

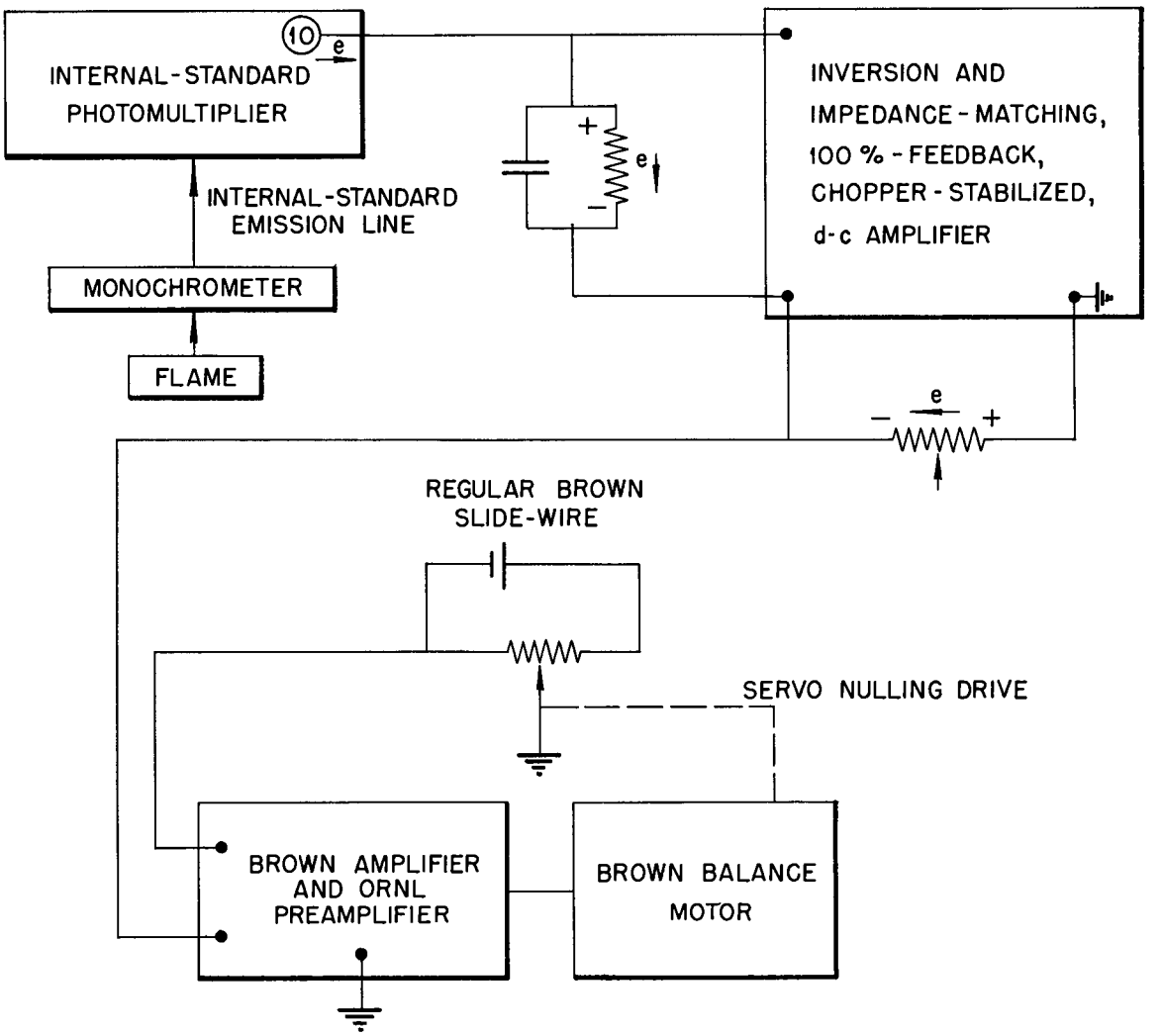

Fig. 8. Functional Diagram of Automatically Recording, Internal-Standard Flame Photometer. Circuit shown switched to record internal standard photomultiplier single-beam output.

The photometer is now being tested with a flame and with various solutions that contain sample substances and added internal standards. The results of this study will determine the further development of the photometer that is needed and will be reported in the next quarterly report. A manual describing the operation of the instrument will be prepared.

Revision of Gating Circuit of ORNL Model Q-945 Automatic Titrator (M. T. Kelley). The original circuit of the gate in the ORNL model Q-945 automatic titrator[3] made the proper setting of the diode-adjust potentiometer difficult. The revised gating circuit shown in Fig. 10 has been found to

[3]Dwg. No. Q-945-1, ORNL Instrument Department.

UNCLASSIFIED
DWG 18019

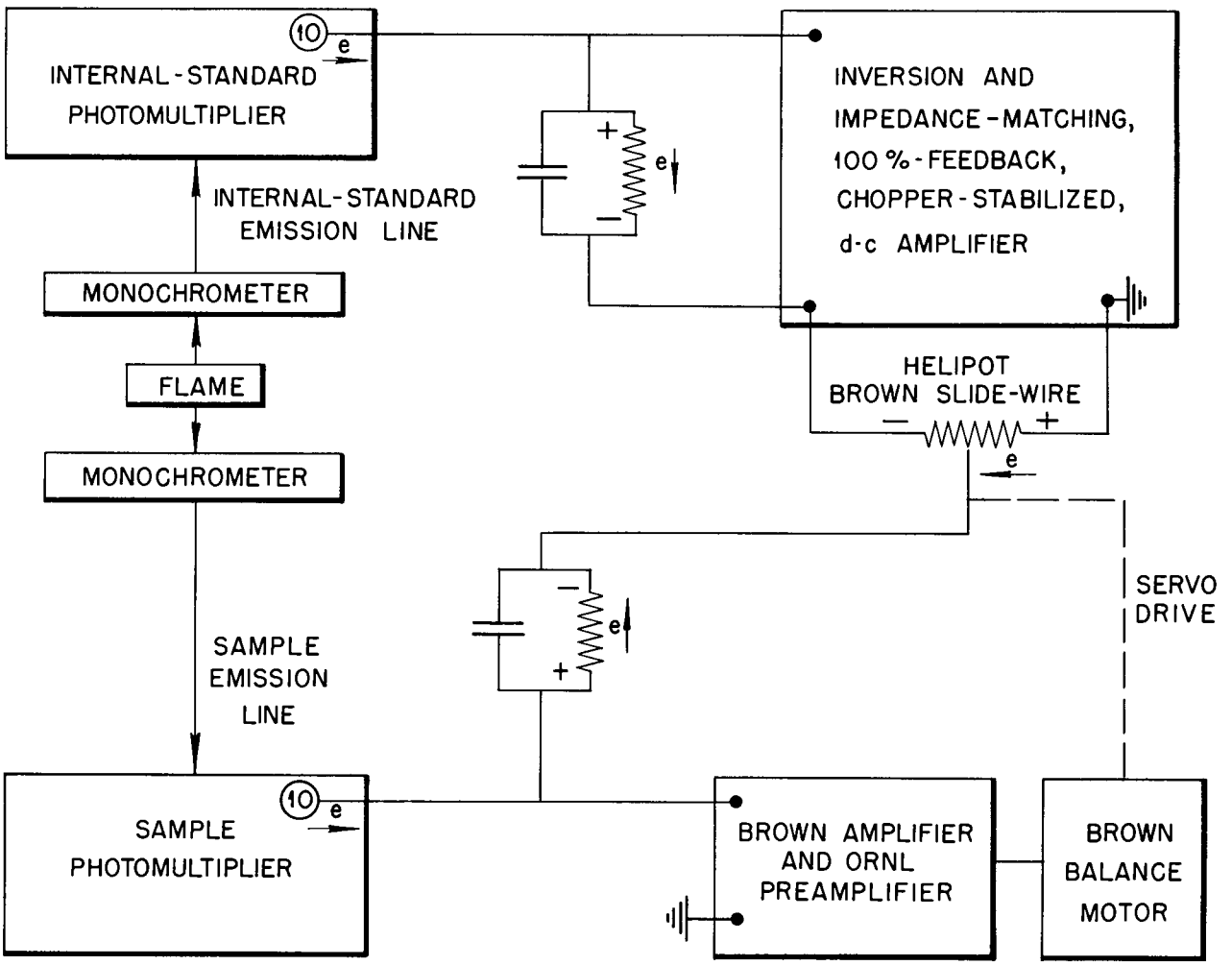

Fig. 9. Functional Diagram of Automatically Recording, Internal-Standard Flame Photometer. Circuit shown switched to record double-beam ratio.

function satisfactorily. The proper setting of the diode-adjust potentiometer can be described unambiguously in terms of the appearance of an oscillographic trace recorded while the titrator is in operation.

Revision of the ORNL Model Q-983 Automatic Curve Follower Installed in a Q-1160 High-Sensitivity Polarograph (M. T. Kelley). The ORNL model Q-983, automatic, polarographic curve-follower has been described in an Instrument Department report.[4] The curve-follower that is installed in a model Q-1160 high-sensitivity polarograph has not been completely satisfactory. The fault in the original circuit appeared to be an excessive bias that resulted from positive-ion current in the 12AU7 tube. The original circuit required a selected 12AU7 tube. Over a period of time, the

[4] M. R. Smith *Automatic Curve Follower, Q-983*, Report XIII-5, ORNL Instrument Department (Sept. 18, 1950).

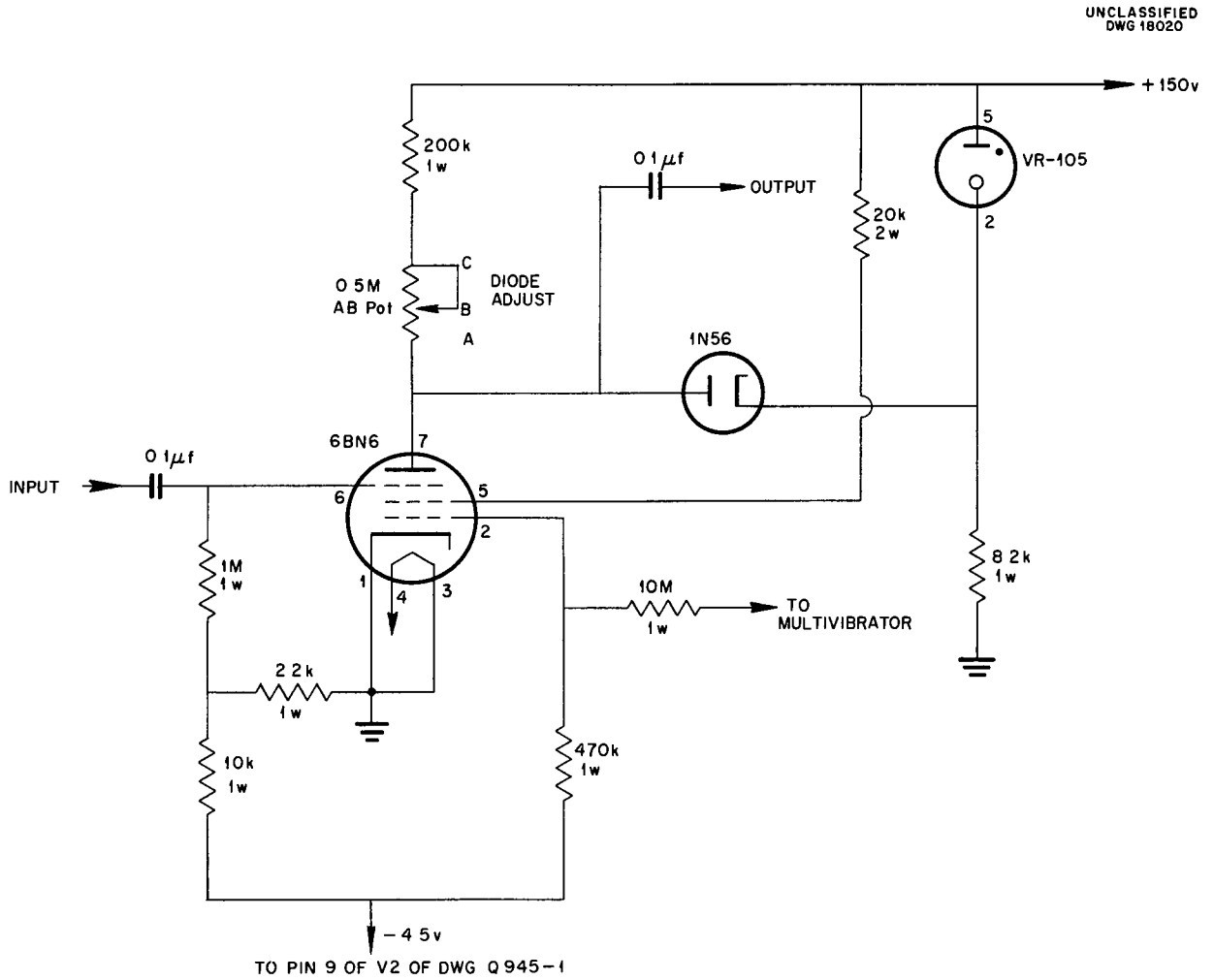

Fig. 10. Revised Gating Circuit for ORNL Model Q-945 Automatic Titrator.

positive-ion bias increased. To overcome this, the output of the phototube had to be raised by increasing the voltage applied to the two type-222 penlight bulbs above the value of 1.5 volts specified in the original design. Still later, the voltage had to be increased more. As a result, the lives of the penlight bulbs were very short and frequent replacements and readjustments were necessary, also, the functioning of the curve-follower was unreliable.

The revised circuit is shown in Fig. 11. Three changes in the original circuit have been made. The heater voltage of the 12AU7 tube was reduced to 5 volts in order to reduce positive-ion current, a 10-megohm resistor was connected in series with the second grid to match the one in the first grid circuit, and the voltage at the 0.5-M potentiometer shown in Fig. 11 was changed by the addition of a 6.8-megohm series resistor. The revised circuit operates satisfactorily with the old 12AU7 tube and only 1.3 volts applied to the two penlight bulbs.

Analytical Applications of High-Frequency Oscillators. II. ORNL Gridos (M. T. Kelley, E. B. Wagner, D. J. Fisher). In a previous quarterly report,[5] it was stated that a grid-dip oscillator, which is essentially a Colpitts type, had been built and given an initial evaluation. This type of instrument has since been applied to certain analytical problems that have necessitated further

[5] M. T. Kelley, D. J. Fisher, and E. B. Wagner, *Anal. Chem Quar. Prog Rep Sept 26, 1952*, ORNL-1423 (in press).

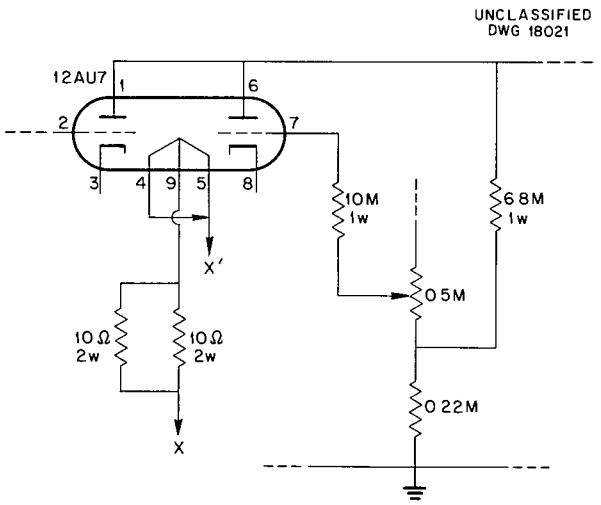

Fig. 11. Revised Section of the Circuit of the ORNL Model Q-983 Automatic Curve Follower.

study of its design.[6] Methods of obtaining linearity of response, increased sensitivity, and proper oscillator functioning in the analysis of high-conductivity solutions have been considered. These problems are very much interrelated; a circuit change that would affect sensitivity could very well also affect linearity, or even necessitate improvement in stability.

An empirical approach was taken in considering the problems associated with each test solution. Estimations of the dielectric constant and conductivity of the particular solution were used in designing the oscillator. Because the range of the oscillator loads will often be wide, the design principles of transmitters were employed. As an illustration, a concentrated aqueous solution of a strong base would have a specific resistance of a few ohms and would load an oscillator in a way entirely different from that of a 0.001 *M* solution of the same base, which would have a specific resistance of the order of a thousand ohms.

The obtaining of linearity of the Gridos response curve has been a very difficult problem. A single-valued function that is free of any maxima or inflection points usually has to be accepted in lieu of perfect linearity. The linearizing of Gridos response curves by causing the recorder to be suitably nonlinear has been considered but not yet tried. The cell design, oscillator frequency, and circuit parameters have all been found to affect the shape of the curves obtained. In order to establish optimum test conditions, the solutions are usually studied at different oscillator frequencies in a condenser and in a coil in the tank circuit of the oscillator. The most promising cell and frequency combination is then chosen for use in further work in which the circuit parameters are studied as variables. For instance, the study may lead to a curve that is satisfactory for electrolyte concentrations up to 1 *M*, but at higher concentrations the oscillator may cease to function because of the loading produced by a high-conductivity solution.

A circuit diagram of a fundamental Colpitts oscillator is shown in Fig. 12 as an aid in illustrating the method of approach to the problems. In the analysis of solutions of low concentration and high specific resistance, the oscillator would operate essentially as if it were unloaded, that is, a small amount of power would be delivered to the solution and dissipated as losses in the solution. Most of the circuit losses would be as if they were caused by the d-c resistance of the coil. Therefore the main consideration, with respect to the circuit, is to obtain a proper *LC* ratio in the tank circuit that will tune the desired frequency range with stable oscillations. In the case of the previously mentioned 1 *M* electrolyte solution with a specific resistance of a few ohms, it would be necessary to design the oscillator as a power oscillator.

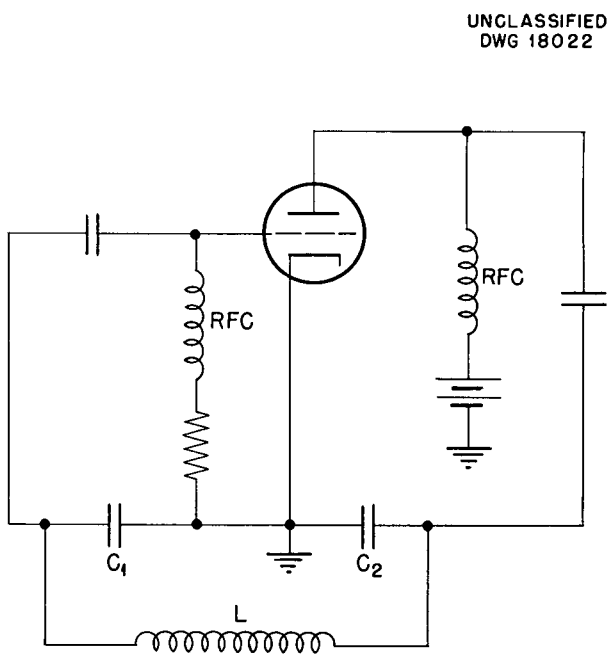

Fig. 12. Circuit Diagram of a Fundamental Colpitts Oscillator.

[6] *Analytical Chemistry Limited Access Quarterly Report for Period Ending Dec 20, 1952* (in press).

The excitation voltage and the plate impedance are two important factors in the design of a power oscillator. One of the critical circuit elements in the Colpitts power oscillator is the capacitor, C_1, that controls the grid excitation voltage. If this voltage is too high, too much power will be expended in the grid circuit. If the excitation voltage is too low, the efficiency of the oscillator is low and the desired oscillator output will not be obtained. Because the part of the radio-frequency circuit between the grid and the cathode consists only of C_1, the grid excitation voltage must equal the IX_{C_1} drop across C_1. Therefore the excitation voltage is a function of the capacity, the frequency, and the current in the circuit. Because the excitation voltage depends upon the values of the r-f circulating current, the proper grid feedback capacity is a function of the circuit losses. If the power losses caused by the solution are increased by a change of specific resistance of the solution, the capacity of C_1 should be increased in order to obtain a decrease in X_{C_1} so that the excitation voltage is proper. In a similar manner, the effect of the load on the output impedance must be considered in relation to the plate resistance (Rp) of the tube. If the plate output impedance is too small, the output of the tube will not be maximum, and, although the circuit will oscillate freely when unloaded, it may be unstable or stop oscillating when a heavy load is applied.

The same methods that were employed in the study of the problem of linearity apply to problems of stability and sensitivity. This is especially true because these factors are often interrelated. Increased sensitivity is obtained by substituting a Brown recorder for a microammeter to monitor the grid current. Extensive shielding and filtering have been used to prevent radio-frequency from entering the Brown recorder. Other studies have been made to determine the effect of temperature on the long-term drift rate of the Gridos.

These techniques have made it possible to build several prototype Gridos instruments that have been used successfully to analyze solutions of different types. It is planned to design and build a prototype Gridos for general laboratory use that will be mechanically stable, well shielded, and convenient for finding optimum circuit parameters for the various analyses requested. Also, the usefulness of the instrument for kinetic studies and nonaqueous titrations will be determined. In general, the use of the Gridos should be advantageous when it is desired to eliminate physical contact of electrodes with the test solution, surface effects, or difficulties caused by colloids or precipitates.

Microelectrode Assembly for pH Measurements (M. T. Kelley, H. L. Hemphill). A need existed for an expendable microelectrode assembly to measure the pH of small volumes of highly radioactive RaLa process solutions. Such an apparatus would also find widespread use in testing other radioactively hazardous solutions.

It has been shown that the emf of a cell, such as

$$\text{Ag|AgCl, 0.1 } N \text{ HCl|glass|test solution||KCl (sat.), } Hg_2Cl_2\text{|Hg}$$

in which a thin, glass wall separates a test solution from a 0.1 N HCl solution, varies with the hydrogen ion activity of the solution.[7] The half-cell

$$\text{KCl (sat.), } Hg_2Cl_2\text{|Hg}$$

may be replaced by the half-cell

$$\text{0.1 } M \text{ KCl, AgCl|Ag}$$

without adversely affecting this relationship. By the use of a cell such as

$$\text{Ag|AgCl, 0.1 } N \text{ HCl|glass|test solution||0.1 } M \text{ KCl, AgCl|Ag ,}$$

an apparatus for the determination of the pH of small volumes of highly radioactive solutions has been developed. The apparatus is shown diagrammatically in Fig. 13.

When the assembly is in use, the tips of the reference and indicator electrodes are brought into contact with the test solution. The capillary tube of the indicator electrode transfers the test liquid into the half-cell. The cell is connected to a pH meter, from which readings are made.

The accuracy, precision, and range of pH measurements made with this assembly compare favorably with those of measurements made by use of the conventional, commercial electrode assemblies. The advantages of this type of cell are the convenient size, low cost, and expendability. Also, it permits the use of small sample volumes, 25 μl being adequate, eliminates the need for a sample container, and can be operated entirely by remote control.

(7) I. M. Kolthoff and H. A. Laitinen, *pH and Electro-Titrations*, 2nd ed., p. 100, Wiley, New York, 1944

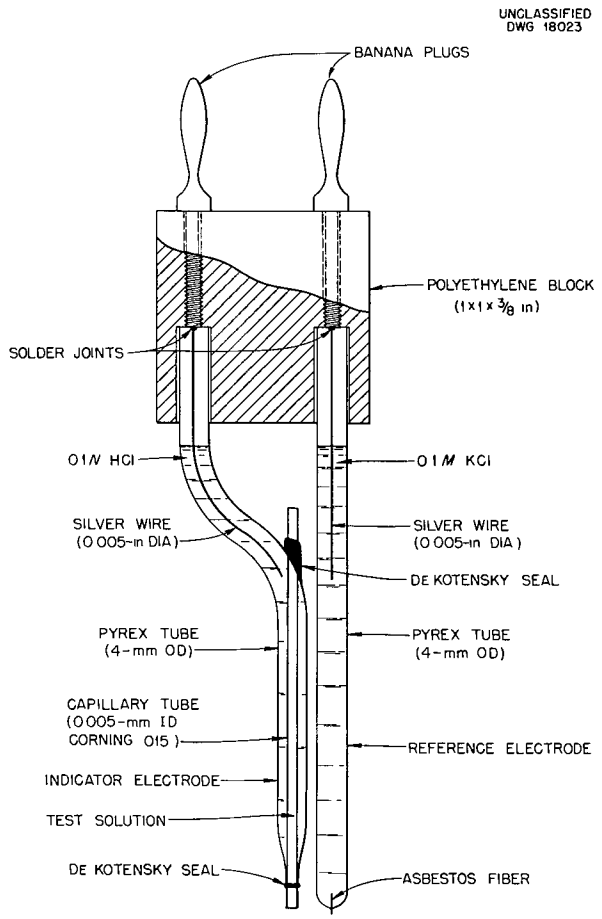

Fig. 13. Microelectrode Assembly for pH Measurements.

HEALTH PHYSICS DIVISION

INSTRUMENTATION AND TECHNIQUES

J. M. Garner W. J. Lacy
B. Kahn R. L. Nichols
F. Kalil

Counting Response of Crystal Spectrometer. The counting response of a crystal spectrometer was determined for gamma rays having energies between 280 and 2760 kev. The work is being continued to determine the response at lower energies and is being done by B. Kahn in cooperation with W. S. Lyon of the Analytical Chemistry Division, they are using a spectrometer belonging to that Division.

The spectrometer consists of a thallium-activated sodium iodide crystal, a type 5819 photomultiplier tube, a linear amplifier equipped with a differential pulse-height selector, and a scaler. It has been adjusted to detect pulses with a spectrum width of 10 kev at a pulse-height setting that has been calibrated so that 1 volt equals 1 kev of energy. A curve such as that in Fig. 14 is obtained by plotting the count rate at several pulse-height settings. The abscissa reading at the peak corresponds to the energy of the gamma or x ray emitted by the radioisotope, and the area under the peak (with background subtracted) is the counting rate caused by photoelectrons produced by these quanta in the crystal. Radioisotopes with known rates of photon emission have been used to obtain the

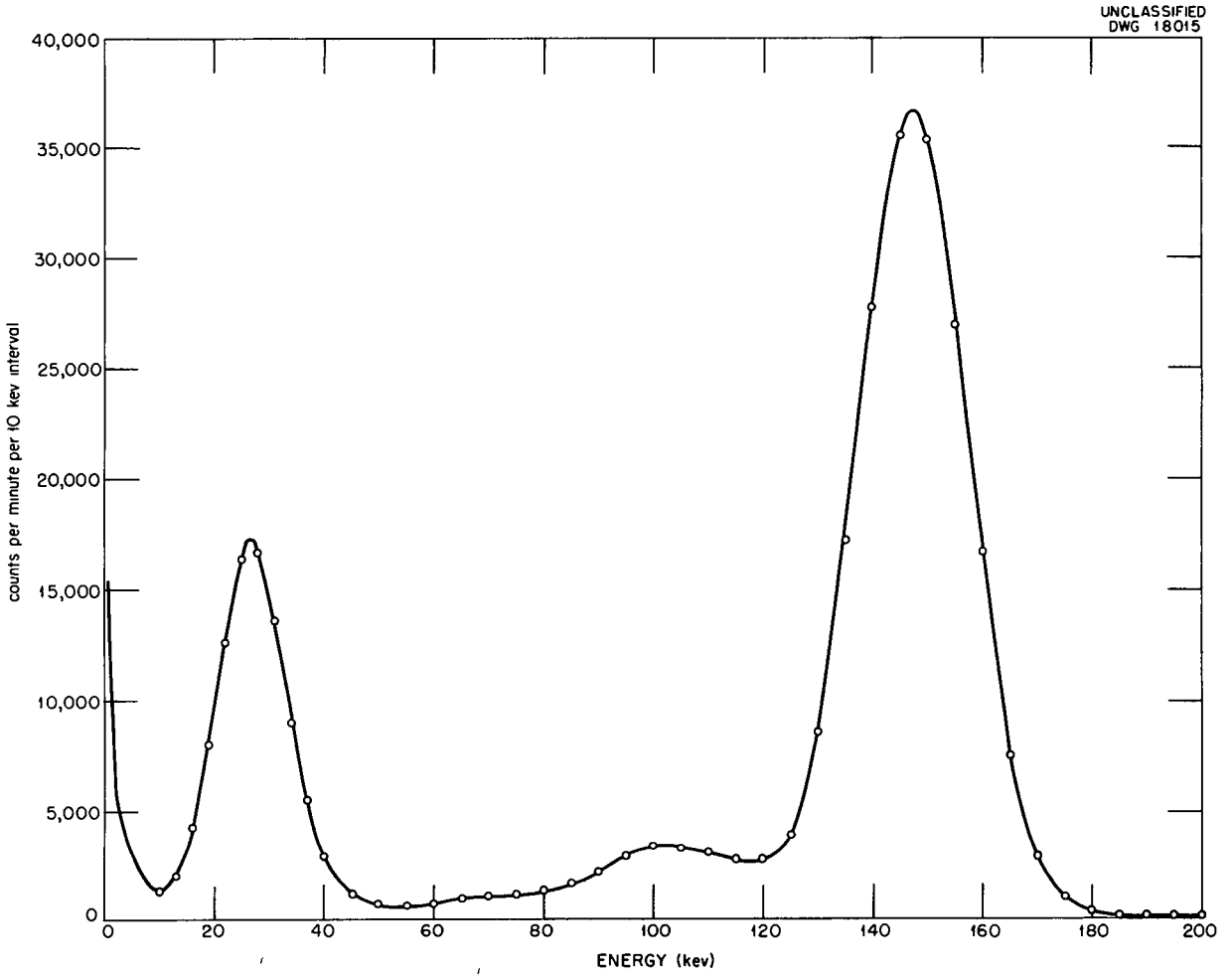

Fig. 14. Gamma-Ray Spectrum of Cerium-141.

ratio of disintegration rate to area under peak (counting rate) given in Fig. 15.

The spectrometer will be used as an analytical instrument,[1] specifically to identify the gamma-emitting radioisotopes and to determine the amount of each radioisotope in samples of the water discharged at White Oak Dam. In relation to the evaluation and control of releases from White Oak Lake to the Clinch River, these quantitative determinations will (1) allow more accurate estimates than are now available of the radioactive material that is released, and (2) provide a basis for calibration of the continuous gamma monitor installed at the dam. Calibration of the monitoring instrument and periodic determination of the gamma spectrum will facilitate interpretation of the continuous record and calculation of the total releases of radioactive material. It is planned to use similar procedures at a later time to determine the activity discharged to White Oak Creek from the ORNL liquid waste stream.

[1] W. S. Lyon and B. Kahn, *Anal. Chem. Quar. Prog. Rep. Jan. 10, 1953*, ORNL-1474 (to be published).

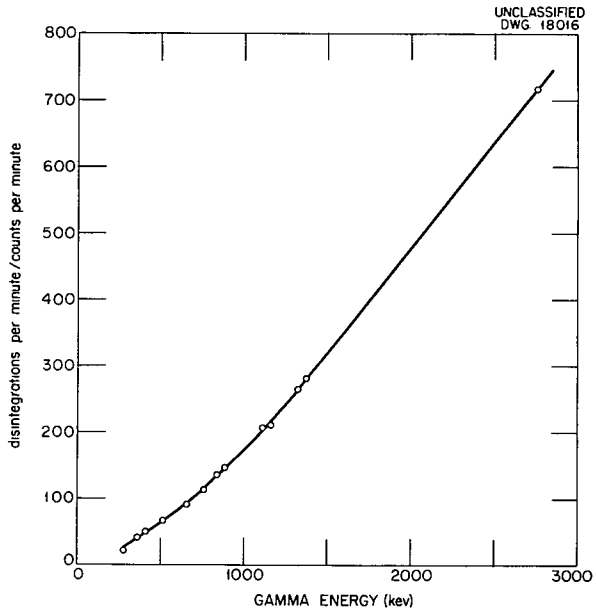

Fig. 15. Variation of Response of Thallium-Activated Sodium Iodide Spectrometer with Gamma Energy.

INSTRUMENT DEPARTMENT

HIGH-VOLTAGE ACCELERATOR PROGRAM

H. E. Banta, R. W. Bennett, R. F. King, A. W. Prichard, H. Reese

The 2.5-Mev Van de Graaff machine has been completed and is in operation. At present, it is being used in a program of investigation of (p,n) thresholds.

Installation of the 5-Mev Van de Graaff has been completed. The machine is presently awaiting a suitable gas supply to fill the tank.

STABILIZATION OF MASS-ANALYZER MAGNET SUPPLY

R. F. King

Analyzer magnets, as supplied by the High Voltage Engineering Corp. for the two Van de Graaff machines, have a 350-volt, d-c, motor-generator power supply. The magnet current is passed through a bank of 70 6L6 tubes. Current through the magnet is sampled by a standard resistor, and the resultant voltage is compared with a comparison voltage established by a voltage-regulator tube. The difference voltage (error signal) is then amplified by a d-c amplifier that controls the grid of the 6L6 tubes.

This system was found to be inadequate, it was discovered that the magnet current oscillated with a relatively high amplitude at a frequency of approximately 1 cps. This oscillation was suppressed by the substitution of a battery source for the comparison voltage, the addition of a second feed-back loop to the amplifier, and adjustment of the constants of the two feed-back loops. The magnitude of the oscillation in the magnet current under the new operating conditions is now less than one part in 10^4.

NEGATIVE 5- TO 7.5-kv, HIGH-VOLTAGE SUPPLY (Q-1342)

B. C. Behr

The Q-1342, negative, high-voltage supply was designed for the neutron-recoil counter. It is regulated to 0.05% for long-term stability with a maximum ripple of 0.02% and has a current rating of 100 μa at 7.5-kv maximum.

Regulation is accomplished by comparing a portion of the output voltage with the voltage from a standard cell. The difference voltage is then amplified by a Brown Electronik amplifier, the output of which controls a Brown balance motor. The balance motor is mechanically coupled by a slip-clutch arrangement to a 15-turn helipot connected so that it automatically adjusts the battery-developed grid bias on the 2C53 shunt-regulator tube. Precision resistors are used throughout the comparison circuit. The entire comparison circuit is enclosed in a separate compartment that maintains a relatively constant temperature within the system after sufficient warmup time.

MAGNET CONTROL (Q-1360)

W. T. Adams

The Q-1360 magnet control was designed to provide a means of maintaining a constant magnetic flux between the poles of an Arthur D. Little Co. electromagnet. This is accomplished in the Q-1360 magnet control by varying a relatively small current flow in the trimmer windings of the electromagnet so as to compensate for variations in the main field. The control signal is obtained from a germanium sampling crystal placed in the field of the magnet. A fixed reference voltage was supplied to the crystal from an external voltage source. The difference voltage obtained from this hookup is fed into the magnet-control circuit, the output of which is connected to the trimmer windings of the magnet. Known as the "Hall Effect," a voltage E is produced between the faces of the crystal parallel to the current flow, if a germanium crystal is placed in a magnetic field and a current I flows through it. This is shown as $E = KIB$, where E is the developed voltage, K is a proportionality constant, I is the applied current, and B is the magnetic-field strength. With this method, it is possible to obtain 40 mv from a magnetic field of 20,000 gauss. Therefore a signal proportional to the magnetic field strength is available and is of the order of 2 mv/g. By comparing this signal with a known and fixed reference voltage corresponding to the desired magnetic field, an error signal will appear whenever the field strength departs from the desired value.

The Arthur D. Little Co. magnet, in which this system has been installed, has two trimmer windings connected in parallel. The effect on the main field winding is about 500 gauss/amp. The control range is approximately ±250 gauss, or 1% of the total field strength. The d-c resistance of the windings, when connected in parallel, is 120 ohms. Hence, to produce a field change of 500 gauss, it is necessary to supply 1 amp at 120 volts.

The magnet control has been completed and installed and is ready for operation.

QUANTATRON (Q-1361)

F. M. Glass

The Quantatron is a compact, integrating, area-background monitor with a range of from 1 mr to 5 r with an accuracy of 2% over the entire range. The instrument is self-contained and designed for continuous operation. It consists of an air-ionization chamber, a 5803 electrometer tube, a modified Schmitt trigger pair, a plate relay, and a manual-reset mechanical register.

The ionization chamber is specially designed to contain the electrometer tube hermetically sealed inside the chamber walls. In this way, the grid of the electrometer tube couples directly to the collecting electrode of the ion chamber. Because all the insulators, including the electrometer-tube base, are in an atmosphere of dry nitrogen and the tube operates normally at cutoff, the combined leakage of both chamber and grid is less than 10^{-16} ampere.

The plate of the electrometer tube is coupled to the modified Schmitt trigger pair that drives a plate relay, contacts of which are connected to the mechanical register. Hence, when sufficient charge has built up on the collecting electrode of the ion chamber to cause 1 μa to flow in the plate circuit of the electrometer tube, the Schmitt trigger pair is tripped, thus producing a pulse from the trigger pair that actuates the plate relay. One set of contacts of the relay is connected to the mechanical register, and the other set serves to reset the instrument. In this way, each time the ion chamber collects a total charge equivalent to the ion current produced by 10 mr (gamma), a pulse is delivered to the mechanical register, and the chamber electrode is recharged simultaneously by the plate relay.

Although the instrument is designed for monitoring background ranging in intensity from 1 mr to 5 r, it can be easily modified for other ranges. Provision is made for accurate calibration. The instrument will repeat consistently to within 2%.

It is a-c operated and has a self-contained, regulated power supply.

A slightly modified version of this instrument has been built that sounds an audible alarm when a predetermined amount of radiation has been integrated. Different integration levels can be selected by means of a selector switch mounted on the panel. The ion chambers for either of these instruments can be made neutron-sensitive if desired.

REMOTE PIPET CONTROL (Q-1348)

L. A. Meeks

A control system has been built that permits remote operation of piston-type pipeters. The system consists of a pipet-piston drive unit that is mechanically coupled to a Brown balance motor and a 10-turn helipot, a suitably modified Brown amplifier, and an additional manually operated, 10-turn helipot labeled "control." The balance motor, amplifier, and the two potentiometers are connected to operate as a position servomechanism. In this manner, the pipet-piston displacement becomes a function of the control-helipot dial setting.

Another feature of the instrument is a fill indicator, which is essentially a vacuum-tube ohmmeter, to facilitate the filling operation. The circuit requires less than 1 μa for its operation and provides sufficient power gain to drive a 100-μa meter. The circuit is built into the Brown amplifier, utilizing an unused voltage-amplifier tube, thus eliminating an additional power supply or space-consuming circuits. The entire control unit is contained in an 8- by 8- by 16-in. cabinet.

PNEUMATIC WAVE GENERATOR

T. M. Gayle

The pneumatic wave generator is a device for producing continuous pressure waves of any desired shape. The instrument may be compared with a standard electrical signal generator, the difference is that it supplies a pneumatic pressure wave or pulse instead of an electrical wave. The generator has the added feature that it can produce waves of various shapes.

Reduced to its simplest form, the device consists of a small venturi tube through which compressed air is passed. The venturi tube is actually in two sections with the throat portion open to atmosphere. With air passing through the venturi, however, the velocity is high enough so that the throat pressure is considerably reduced and, consequently, air losses are held to a minimum. A disk-cam alternately cuts or slices through the venturi, thus interrupting the flow of air and pressure transfer. The cam is rotated by an electric motor through a suitable transmission, is circular in shape, and has the rotating center removed from the geometric center. As the venturi is moved close to the rotating axis, the venturi throat is interrupted during most of the cycle. Conversely, as the venturi is moved away from the axis, air-pressure transfer takes place during most of the cycle.

The practical model shown in Fig. 16 has two venturis operating from one cam. The venturis are machined from rod stock and are shown mounted in the metal block. They are inserted in holes and held in place, perpendicular to the cam, by setscrews. The block is mounted on two metal plates and may be moved toward or away from the center of the cam rotation by loosening a setscrew in the block and sliding it along the plates. In this manner, the on-time, off-time relationship of the pressure transfer or the per cent positive to negative portion of the wave may be changed. Provision has been made in later models for moving this block by a feed screw arrangement so that it may be conveniently and accurately positioned while in operation. As shown in the photograph, the venturi sections are connected to piping by high-pressure hose in order to permit the desired movement.

The model shown in the photograph was made for a fixed frequency of operation. Variable frequency may be achieved by driving the cam from a variable-speed motor or transmission.

Shaping the Wave. The wave shape may be changed in a number of ways. The obvious way to change the amplitude of the wave is to vary the supply pressure of the air, and the wave symmetry may be altered by varying the on-time to off-time ratio. As each section of the venturi is moved nearer to or away from the surface of the cam, the rise-time or fall-time of the wave is affected. The fall-time is especially sensitive to the position of the downstream venturi section in relation to the cam. By positioning the downstream venturi section very close to the cam surface, quite slow fall-time may be obtained, since the exhausting of air from

UNCLASSIFIED
PHOTO 10137

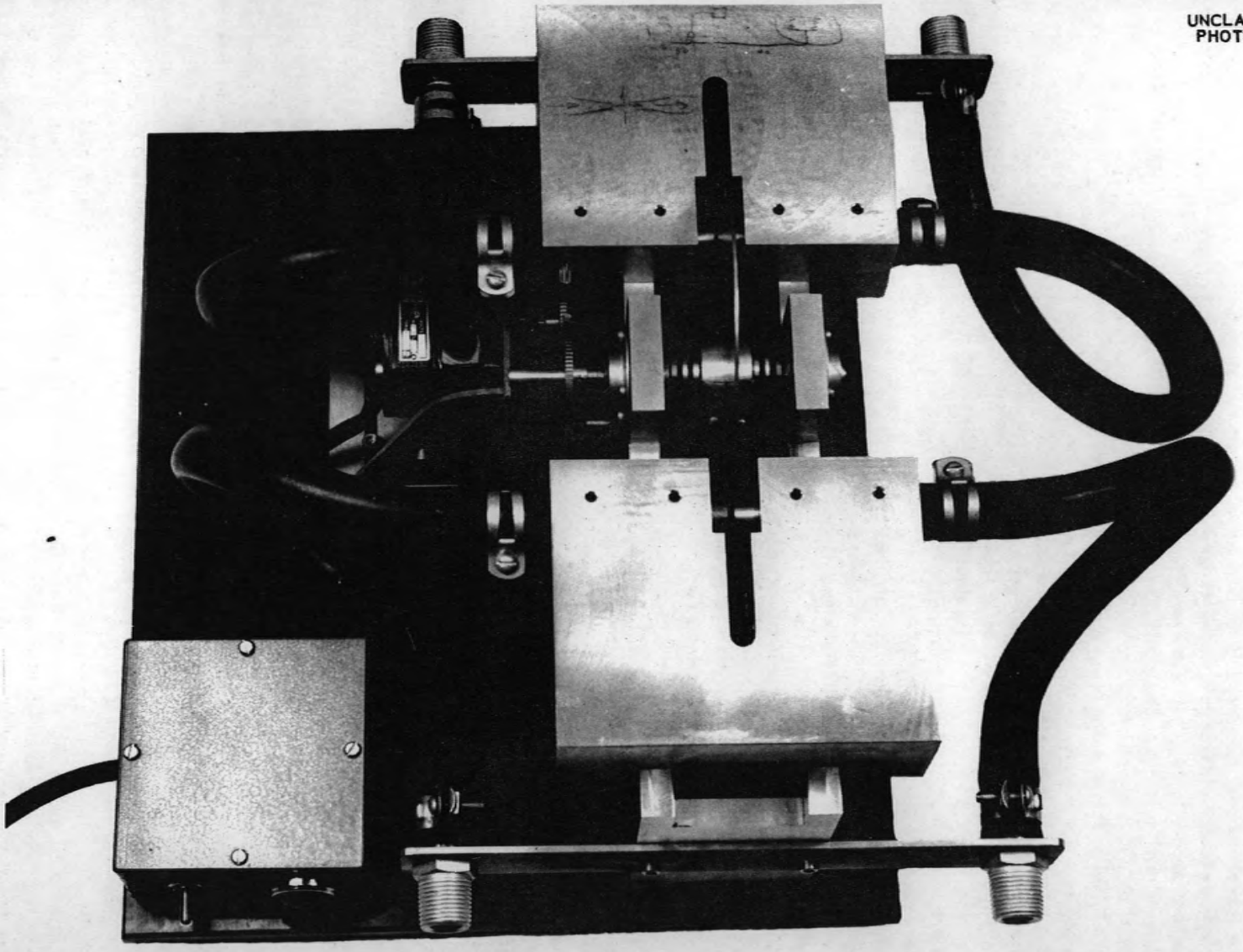

Fig. 16. Pneumatic Wave Generator.

the downstream volume is delayed. Rapid fall-time may be obtained by providing more clearance for quick exhausting of the built-up pressure. By adding adjustable restriction-capacity networks to the supply and/or exhaust circuits, a great amount of flexibility is obtained. Sample wave shapes obtainable are shown in Fig. 17. The amplitude of the waves shown varied from about 5 to 50 psig. The speed of all charts shown was 25 mm/sec.

Uses. Originally, the pneumatic wave generator was developed as a pneumatic switch to replace a timer and solenoid valve in applications requiring many millions of operations without failure. Neither timers nor solenoid valves proved to be entirely satisfactory in these applications. The electric drive motor is about the only limiting factor on the pneumatic wave generator. However, this is not a serious limitation, because the cam is balanced and makes the load extremely light. The expected life of all components, excepting the motor, is almost limitless in normal operation. The obvious use for such a device is in applications that require rapid pneumatic switching – with extreme dependability – over long periods. Its use in the life-testing of pressure gages, pressure switches, and many pneumatically actuated devices should be of interest.

The wave generator may be used advantageously in testing the frequency response of many pneumatic instruments and pneumatic-electric transducers. The ability to change the wave shape, as well as frequency and amplitude, might prove useful in certain applications.

ADAPTATION OF ELECTRONIC *X-Y* RECORDER TO RECORD POTENTIALS ACROSS A 1-MEGOHM SOURCE

G. Ritscher

Modifications were made to a standard Brown Electronik *X-Y* recorder for the Solid State Division in order to permit direct plotting of potential vs. current curves for semiconducting materials with a resistance that sometimes approaches 1 megohm. The modifications included the construction of a high-gain, low-noise amplifier to supply more power for the *Y*-axis motor, alteration of the potentiometer circuits of both axes to provide double ranges of 0 to 0.5 and 0 to 1.5 volts for each axis, and rearrangement of the circuits to reduce the effects of leakage to the case in the type of measurements to be made. In addition, rheostats were provided on an auxiliary panel for resistance-change compensation of the samples while experiments are in progress.

Tests on the recorder, after modification was completed, showed that satisfactory measurements could be made across resistances of 3 megohms.

INSTRUMENTATION FOR LIQUID-METALS CIRCULATOR

J. N. Baird, Jr.

Two package-type, pretested instrument panels were designed and installed for use with the high-temperature liquid-metals circulator operated by the Solid State Division.

Because of the potential hazards involved in circulating a liquid metal in a stainless steel loop at red heat, the panels were designed to prevent, insofar as possible, human misoperation and to prevent the control circuitry from either being exposed to chance physical damage during normal operation or being contacted with chemicals during emergencies.

Two surge tanks within the loop system were pressurized with helium, and the entire loop was operated in a chamber that was continuously purged with helium. An evacuated chamber surrounded a portion of the helium chamber.

Kerotest valves and manifolds, pressure regulators, and gages were assembled on a panel designed to provide a number of alternative applications of vacuum and helium gas.

In order to minimize misoperation, the panel was constructed as a "graphic" panel through the use of colored striping to simulate the actual piping system. This striping was standard, colored, anodized-aluminum material that is available in various widths in straight sections and bends. Green was chosen for vacuum lines and red for helium lines. This is the first graphic panel to be constructed at ORNL. The vividness of the three-dimensional striping compared with two-dimensional painted stripes was very effective and was appreciated by the operators who used the panel.

The principal control panel combined an instrument section with a power-switching section. The latter was required because the power ratings of the five loop heaters, electromagnetic pump, and all instruments totaled almost 22 kva. A separate, 220-volt, 100-amp, 3-wire circuit was installed in the building and brought directly to the panel where it was distributed as required.

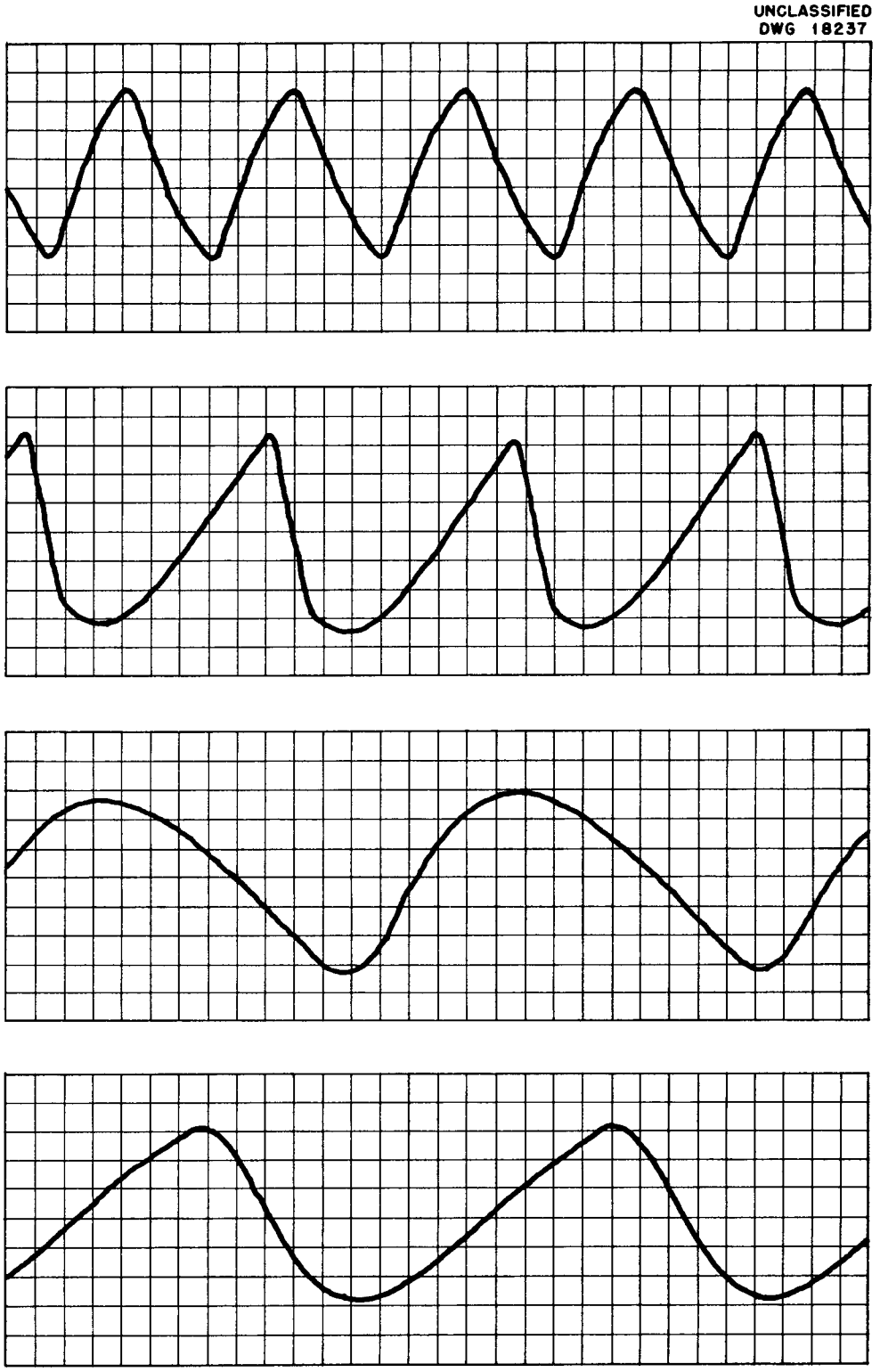

Fig. 17. Sample Wave Forms from Pneumatic Wave Generator.

The two main loop heaters were automatically controlled by instruments and were also subject to limiting devices. The other three heaters were controlled manually by Variacs and were also subject to limiting action. The electromagnetic pump was controlled manually through a 7.5-kva Powerstat.

The flow rate through the loop was measured by an electromagnetic flowmeter that actuated a Leeds and Northrup Speedomax recorder. The flow rates of cooling water were controlled manually with valves and indicated by a rotameter.

The annunciator circuit and panel was designed by J. T. DeLorenzo who also designed the electrometer and radiation-control circuit.

No extraordinary or novel instrumentation was required. Instead, the panel was characterized by the extreme care used in covering all power wiring, shielding all thermocouple leads, and in devising annunciator, limiting, and alarm circuitry to meet all probable contingencies.

The two panels are shown in Fig. 18.

UNIVERSAL TESTING PANELS FOR MEASUREMENT AND CONTROL OF TIME, TEMPERATURE, PRESSURE, AND ELECTRICITY

J. F. Potts, Jr.

A set of panels and associated instrumentation have been designed and constructed to give maximum flexibility with the minimum of basic components in an attempt to provide universal instrumentation of the type that would be needed for Chemical Technology Semi-Works experimental setups. Briefly, the facilities provided are time-interval control and measurement, operation counting, both indicating and recording, a-c voltage manual control and a-c voltage and current measurement, temperature recording and precision indication, pressure indication, recording, and controlling. These facilities are incorporated in four, separate, 61 by 19-in., standard, relay-rack cabinets equipped with casters.

Timing and Electrical Panel. The panel was divided into four, separately removable sections so that one or more sections can be used remotely. Where possible, connections on all panel sections were brought out to the front for accessibility and the components were wired so that they could be energized either internally or externally with a 115-volt 60-cps supply. The arrangement for each panel section will be described, and some of the possible applications will be pointed out.

Two repeat cycle timers of 0- to 2-min and 0- to 2-hr ranges, respectively, were incorporated in the first section to provide continuously adjustable cyclic control contacts, either make or break. The spdt contacts were brought out separately, and the motor leads were connected for either external or internal power supply.

Two elapsed-time instruments are similarly connected with either internal or external power supply. Contactor terminals were brought out to connect either instrument to removable thumb switches that were mounted on the panel side or to a remote contactor. The elapsed-time meter will run for a total of 10,000 hr to the nearest 0.1 hour. The standard timer, which could be used as a stop watch with the plug-in thumb switch and internal power supply, provided for a total of 1000 sec, to the nearest 0.1 second.

Two resettable operation counters were incorporated on this panel, complete with rectifier circuits. Terminals for contactors and power supply were brought out to the panel front.

The second panel section was built to give two variable-voltage supplies, 0 to 135 volts a c, one rated 20 amp and one rated 5 amp with outputs either to polarized, nonpolarized, or "five-way" terminals, optionally, in series with ammeters. These ammeters could be connected either in series with the respective autotransformers or to "five-way" terminals for use in external circuits. A voltmeter was provided to switch to either the 20- or 5-amp autotransformer output or an external circuit through a nonlocking lever switch.

In the third panel, a 0- to 1-ma, d-c, strip-chart recorder was provided with an adjustable voltage divider and rectifier circuit to record a-c voltage from approximately 50 volts full scale to 250 volts full scale. This did not give a voltage reading proportional to scale deflection, but the recorder could be calibrated easily for a particular application by using the indicating voltmeter on the panel above it. The recorder input could also be switched directly to terminals on the panel for recording 0- to 1-ma direct current (internal resistance 1400 ohms), with appropriate shunts, it could be used to record direct current in amperes, or with an appropriate voltage divider, it will record d-c voltage.

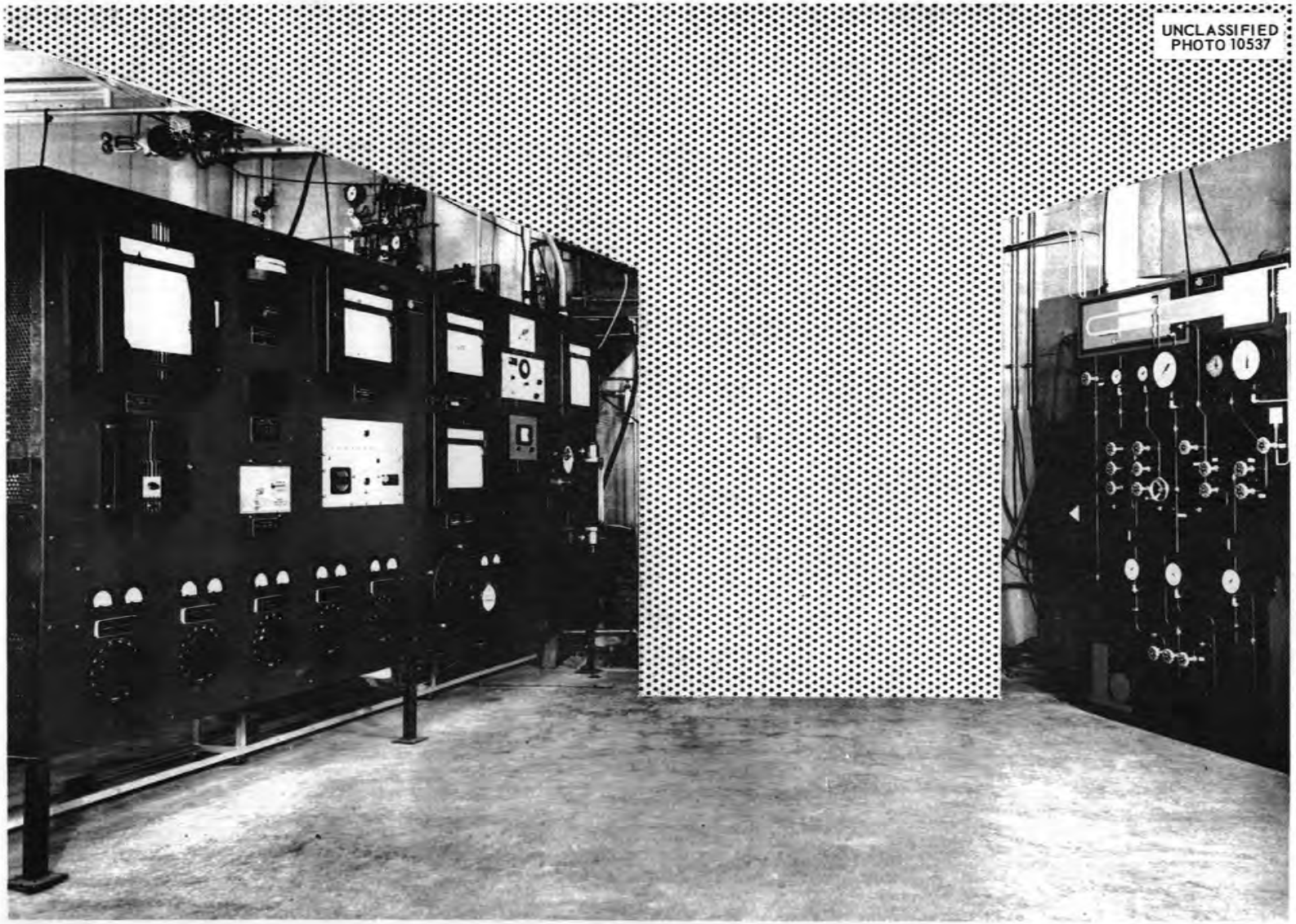

Fig. 18. Instrument Panel for Liquid-Metals Circulator.

An operational recorder was installed on the fourth panel section for obtaining permanent records of operation sequence and operation time. The recorder had five circuits with provisions for five additional circuits. The respective solenoids were brought out to the panel front in such a manner that they could be actuated by a contactor at ground potential or at ±115 volts a c with respect to ground. Also, the elements could be operated directly from a source of 24 to 34 volts d c or 90 to 135 volts, 60 cps. Five shorting plugs to facilitate these connections were provided with this arrangement. This recorder and the recorder above it, described in the preceding paragraph, had variable chart speeds, changeable with gears inside the respective cases. The power-supply switching was also on this panel section. The master switch was made to energize everything on the panel. A magnetic breaker protected everything on the panel except the 20-amp autotransformer, which was separately fused. In addition, there were two convenience outlets on the side of the panel, energized directly from the power main.

Temperature Measurement Panel. The measurement of temperature was based on the use of iron-constantan thermocouples as primary elements, with a range of 0 to 200°C. These were considered to be the most universally applicable specifications for chemical technology setups. Two null-balance potentiometers were incorporated on this panel, one was a 24-point, push-button selection, precision temperature indicator, the other was a 12-point multiple-record temperature recorder. As many as 24 thermocouple connections could be made simultaneously on the panel front to a quick-connector jack panel with polarized plugs made of thermocouple material, thereby mating the 24 jacks of thermocouple material that were connected to the 24 respective points of the precision indicator. These connections were also paralleled, respectively, with a second quick-connector plug-and-jack panel with 12 plugs connecting directly to the 12-point recorder by which any 12 of the 24 test points could be recorded in any order.

Manometry Panel. Three 40-in., well-type manometers were mounted on the manometry panel, along with six C-clamp rotameters. The manometer connections were brought out, through float-check valves, to bulkhead fittings to which were connected quick-connector tubing or hose fittings. The rotameters were supplied from an air manifold that was fed through a filter-dripwell and pressure-regulating valve from station air supply. The rotameter outputs were also connected through bulkhead fittings to quick-connector receptacles. This arrangement provided for versatility in the use of both the manometers and the purge meters.

Pressure Recording-Controlling Panel. Quick-connector receptacles were used on the pressure recording-controlling panel that incorporated a six-point, 3- to 15-psig pressure-recorder and two indicating receiver-controllers. Parallel input connections were made on the front of the panel to the controllers so that two of the recorder points could be used, giving both recording and controlling. The controller outputs that lead to pneumatically controlled devices were brought to the receptacle panel. Two differential pressure transmitters, with adjustable full-scale range of from 20 to 200 in. of water, were supplied with this system, which will be installed locally.

INSTRUMENTATION FOR GASEOUS RADIATION STUDIES

J. F. Potts, Jr.

In support of research in radiation chemistry of gases conducted by P. S. Rudolph of the Chemistry Division, instrumentation has been developed and installed for the detection and control of currents of the order of 10^{-10} to 10^{-5} amp at voltages up to 25 kilovolts. Figure 19 shows a schematic arrangement of the automatic-manual control setup used to control the ionization current.

The tandem autotransformers serve to give maximum control sensitivity for a given range of voltage and also to permit manual operation of the system, independent of the pneumatic controller. Manual control can also be realized through automatic-manual transfer in the pneumatic system.

The instrumentation is contained in two, mobile, six-deck, relay-rack cabinets. One cabinet contains the high-voltage temperature recorder, elapsed-time meter, and the remote manual controls and safety switches for the high voltage supply. The other contains the electrometer, electrometer-calibrating potentiometer, current recorder-controller, and the pneumatic motor.

Control tolerances are within ±1% of full scale for normal load and source fluctuations, the electrometer stability being the limiting factor.

Provisions are made for a precise check of the ionization current at critical points by the use of

UNCLASSIFIED
DWG 18238

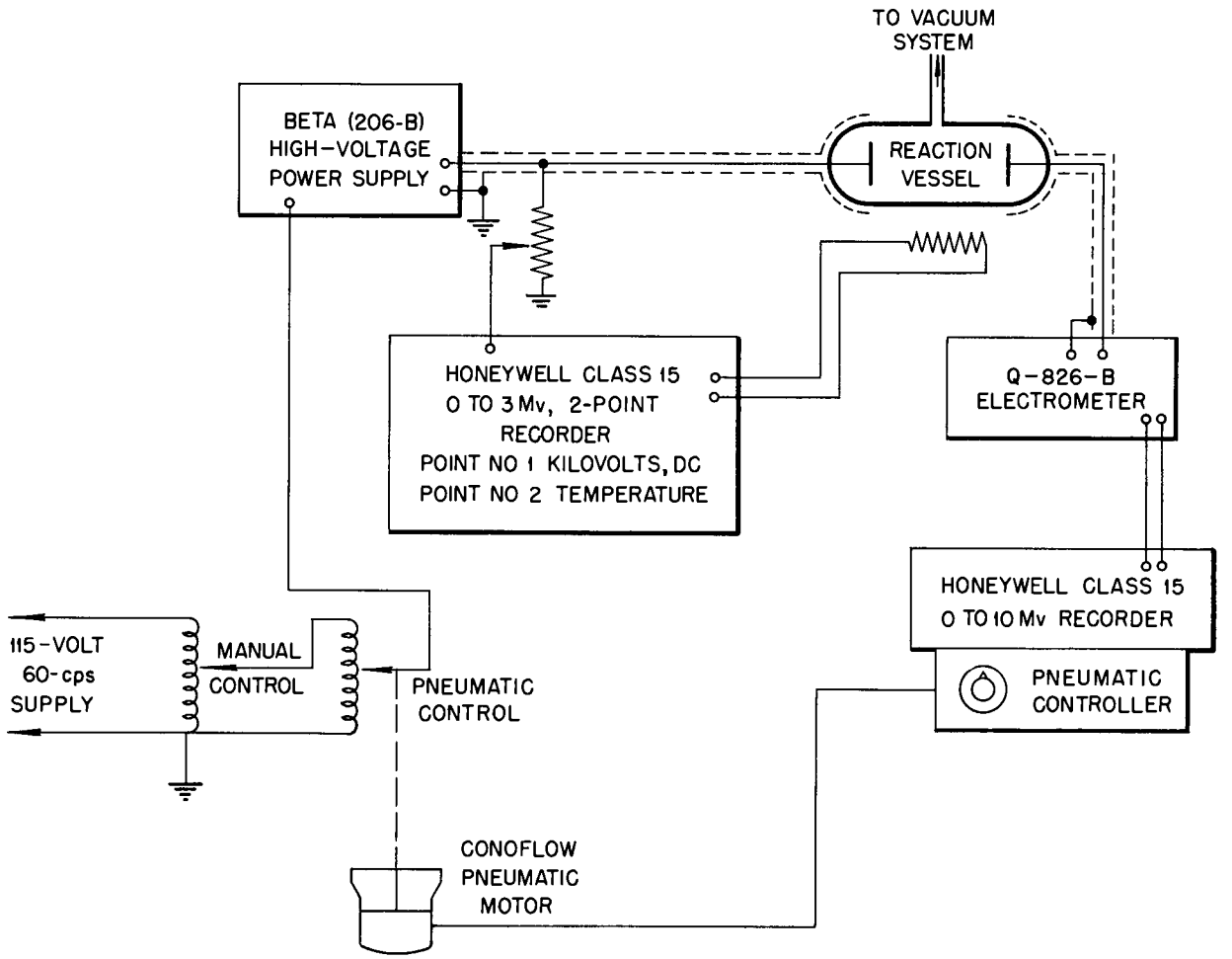

Fig. 19. Automatic Manual Control Diagram.

a reflecting galvanometer as a transfer standard between the actual current and a precision-potentiometer–standard-resistance combination. These data must be taken for a total time of 200 hr, so the automatic control should result in a considerable saving of time.

The only unique feature in this setup is the application of a two-point, null-balance potentiometer recorder to measure both voltage and temperature without additional switching. This was accomplished by adding a second reference-voltage circuit to the potentiometer circuit, to which a copper resistance was added instead of the normal reference-junction resistance. The copper resistance was brought out by means of a shielded cable to the temperature-test point, and its temperature coefficient of resistance was such that it gave a 120°F temperature span for the 3-mv span potentiometer, the range of which is adjustable. Figure 20 shows a schematic arrangement of the circuit used to accomplish this dual function.

A CRYOSTAT CONTROLLER

T. M. Gayle

Accurate temperature recording, automatic control, and automatic program control was desired for an ultralow-temperature test chamber. Accuracy requirements dictated the use of a wide-strip chart recorder. The range of measurement from +50 to

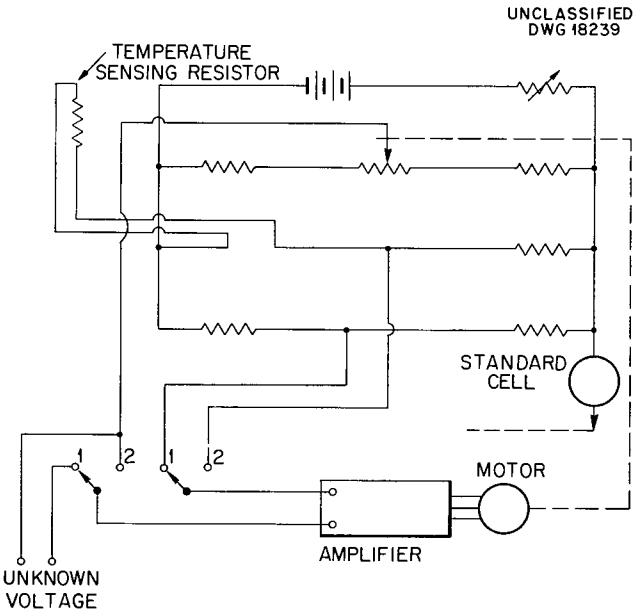

Fig. 20. Measuring Circuit Modification.

–190°C indicated that copper-constantan thermocouple materials should be used. Automatic control was desired at any temperature, as well as automatic program control for full-scale drive and control response from 5 min to several hours. It was further desired that the program control incorporate an almost stepless selection of speeds between these limits and that the drive be uniform in degrees per unit time. This presented somewhat of a problem since the voltage output of the copper-constantan thermocouple is very nonlinear.

It was initially decided that liquid nitrogen would be used as the coolant. Helium gas was cooled to about –190°C and passed through a jacket of the chamber. Results indicated that the cooling could be accomplished rather rapidly but that heating was slow because it was dependent on the thermal losses of the system. A stream of heated helium then added to the system was used to purge the cooled helium in order to reach the desired temperature. The volume ratio would be roughly proportional to temperature. Preliminary runs with small rotameters for measuring flow rates indicated that maximum flows of about 4 ft^3 would be necessary for optimum control. Two ¼-in. diaphragm-control valves were obtained for the automatic control of these flow rates. Valve positioners were used with the valves and were set so that one valve was "air-to-open" and the other was "air-to-close." The strip-chart recorder was provided with a standard proportional-reset, pneumatic controller. Stable single-point control was obtained at any point in the range by merely setting the controller index.

Program Control. The problem of driving the setpoint for program control proved rather difficult because there was no room for mounting the drive motor in the recorder case. The motor was finally mounted on the door case, and a rim-drive arrangement was fabricated to operate the setpoint-cable drum. Since the setpoint had to be driven at different rates of speed and since the rate must vary over the range in order to compensate for nonlinearity of the thermocouple, any simple drive means was precluded. Figure 21 gives a schematic diagram of the system that was finally developed. A self-balancing Wheatstone bridge arrangement in which the motor mounted on the instrument case door was used to drive the receiving end of the bridge to a balance position. In so doing, it also drove the setpoint in the instrument. By driving a remotely located transmitting section of the bridge, the receiving portion in the instrument automatically followed. A standard Brown amplifier, modified for high input impedance, was used to detect bridge unbalance and to drive the servomotor. Ten-turn, helipot-type rheostats were used as the bridge elements.

It was decided to try to compensate for the nonlinearity of the thermocouple by electrical rather than mechanical means. If the floating arm of a linear rheostat is shunted by a fixed value of resistance, the resulting resistance output of the rheostat will be nonlinear and exponential in nature. The value of the ratio of shunt resistance to main resistance determines the exponent. Thus, by gearing two rheostats together and letting one shunt the other, great flexibility is obtained. A 500-ohm and a 1000-ohm helipot was geared together in a 1 1 ratio, and when used with the 1000 ohm receiving helipot, the resulting output matched the copper-constantan thermocouple to within less than 2%. The two helipots are mounted in a small sheet-metal box as shown in the center of Fig. 22.

A drive for the transmitting helipots was provided by coupling them to a 60-rpm synchronous motor through a suitable reducing gear train. Provision was made in the gear train for rapid gear changes by the use of a small access window in the front panel of the program controller. In order to allow for almost stepless selection of speeds between

UNCLASSIFIED
DWG Q 1355-2A

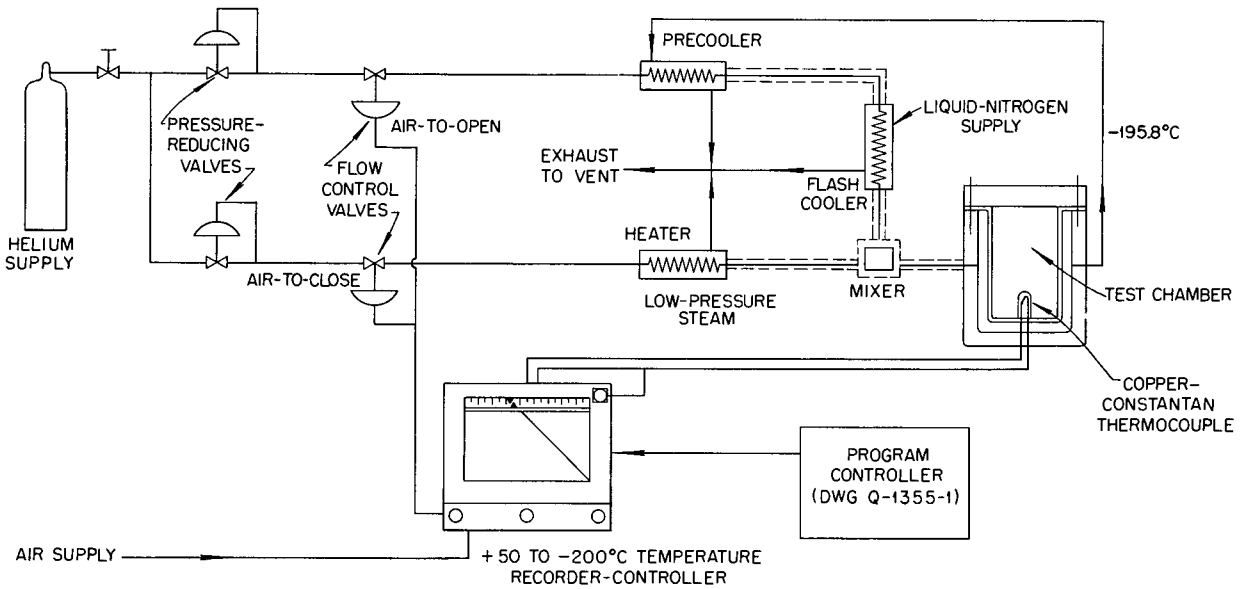

Fig. 21. Schematic Diagram of Crystal Controller.

the gear change increments, a pulsing control for the drive motor was fabricated. A small switch actuated by a motor-driven cam was used to switch the power to the drive motor off and on. The switch can be positioned to any point on the cam, thus allowing for any on-time to off-time ratio for the entire cycle from 0 to 100%. Change in the switch position was accomplished by turning a ten-revolution dial affixed to the switch through a gear train.

HYDROGEN-OXYGEN GAS DETECTOR

D. S. Toomb[1]

A detector has been developed for indicating amounts of the order of 1 vol % of a stoichiometric mixture of hydrogen and oxygen in a gas stream. The detector is an active element consisting of an electrically heated platinum wire and a similarly heated alumel-wire reference element for nullifying flow variations. Each of the elements, which are in series in the gas stream, has a thermocouple spot-welded to the center of the heated wires. Prior to operation, the alternating currents through the platinum and alumel wires are adjusted so that the thermocouples, which are connected in series opposition, are at the same temperature, hence, the net output of the thermocouple circuit is zero. During operation, when uncombined hydrogen and oxygen are present in the gas stream, the hot platinum wire will catalyze the recombination reaction and the wire temperature will increase. Since less recombination takes place on the alumel wire, the two thermocouples will be at different temperatures, and a millivoltmeter in the thermocouple circuit will indicate the difference in potential. This potential can be calibrated in percentage of hydrogen and oxygen in the gas.

The sensing cells are a modification of the Davis Instrument Co. thermal-conductivity cells.

[1] Reactor Experimental Engineering Division.

THERMAL CONTROL VALVE FOR LOW FLOW COEFFICIENT

A. M. Billings C. A. Mossman

The metering of small gas flows at high static pressures and large pressure drops often requires flow coefficients as low as 10^{-5} to 10^{-7}. Valves of conventional design have, at present, a lower

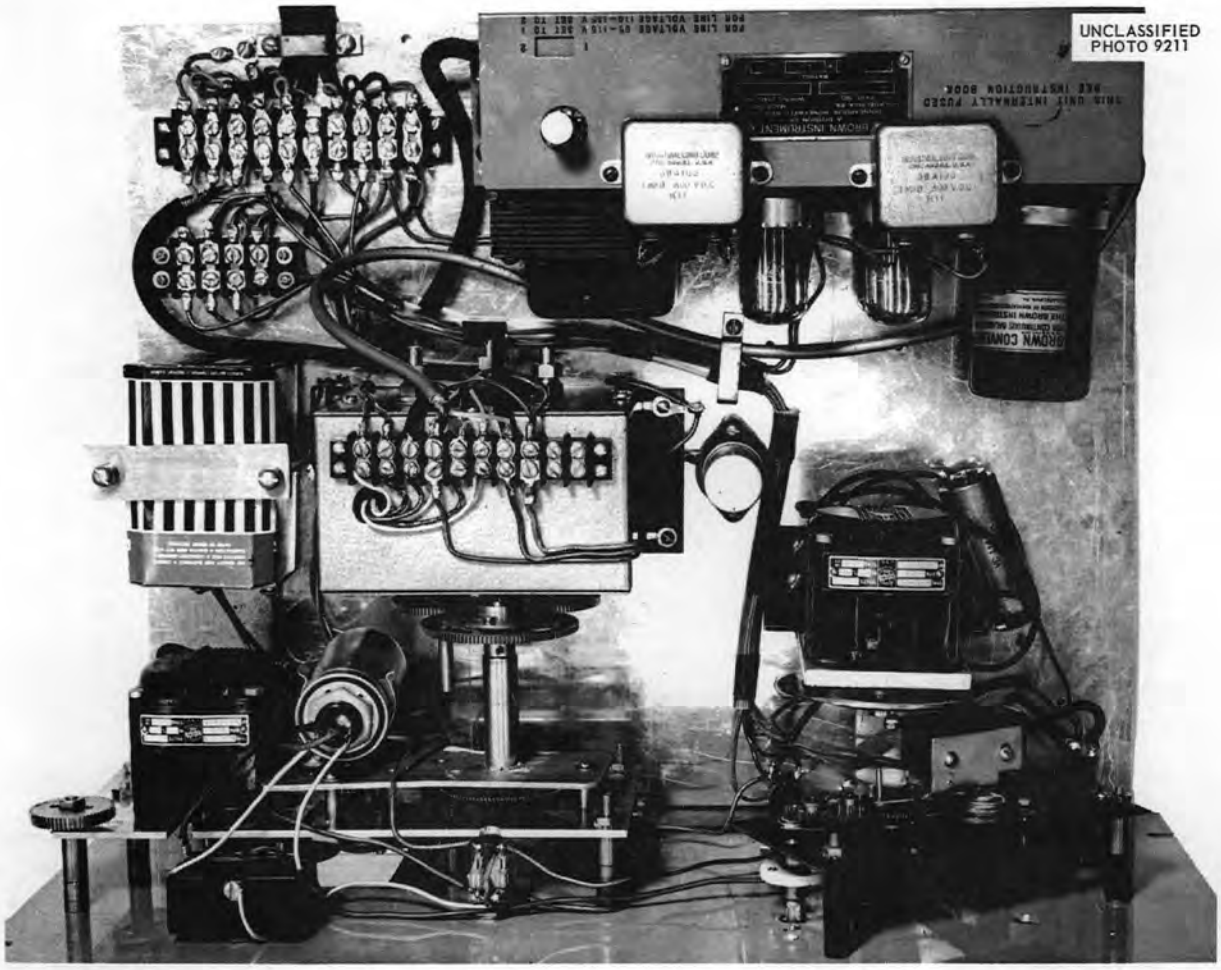

Fig. 22. Top View of Cryostat Controller.

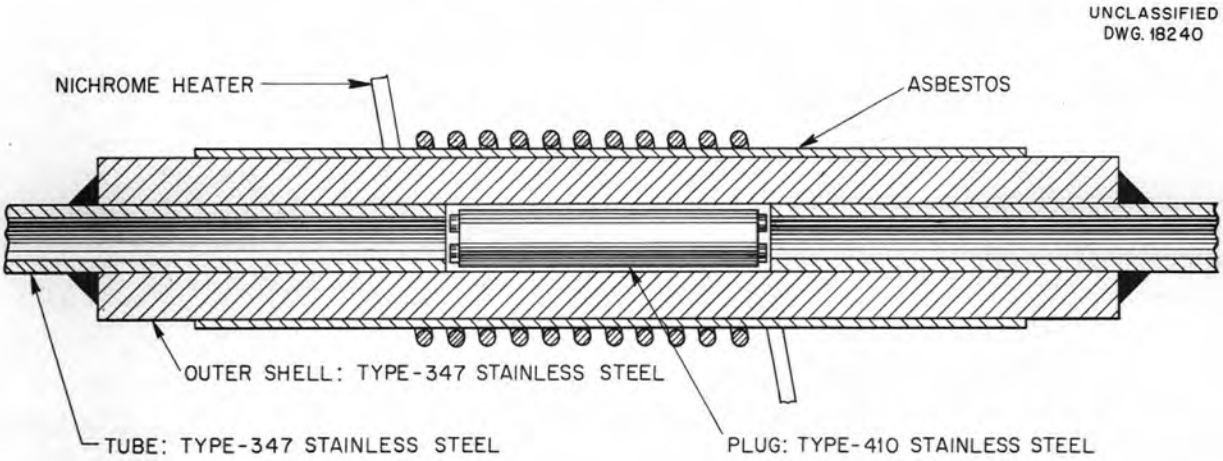

Fig. 23. Thermal-Control Valve.

limit for their flow coefficient of approximately 10^{-4}. This limit is imposed by practical machining tolerances.

As a means of circumventing the basic machining tolerance, a valve was designed that utilizes, as its actuating means, the thermal coefficient of expansion of metals. Figure 23 shows a valve of this design. The valve consists of an outside shell into which a small plug is shrunk-fit. The plug is made of a metal with a coefficient of expansion lower than that of the outside shell. As shown in the figure, the piston is held in place by the tubes. These are butted against the piston and then welded to the outside cylinder. A heating element that is used to heat the valve to the desired temperature for the desired flow is wound around, and insulated from, the outside cylinder. In the valve shown, type 347 stainless steel was used for the plug. This now forms an assembly that will withstand high static pressure, high pressure drops, and corrosive vapors, as well as being absolutely leak proof.

To operate the valve, the temperature is raised by means of the heater element. Since type 347 stainless steel has approximately twice the thermal coefficient of expansion of type 410 stainless steel, the outside shell will expand twice as fast as the plug. As the temperature is raised, the clearance between the shell and plug will change from the original negative (shrink fit) value to some positive value that gives the desired flow coefficient. By the proper selection of materials and dimensions, a valve is obtained that requires a large temperature change for a small change in flow. This means that the control of the valve temperature is not critical and may be controlled by some simple and inexpensive system. Figure 24 shows a typical curve of valve temperature vs. gas flow.

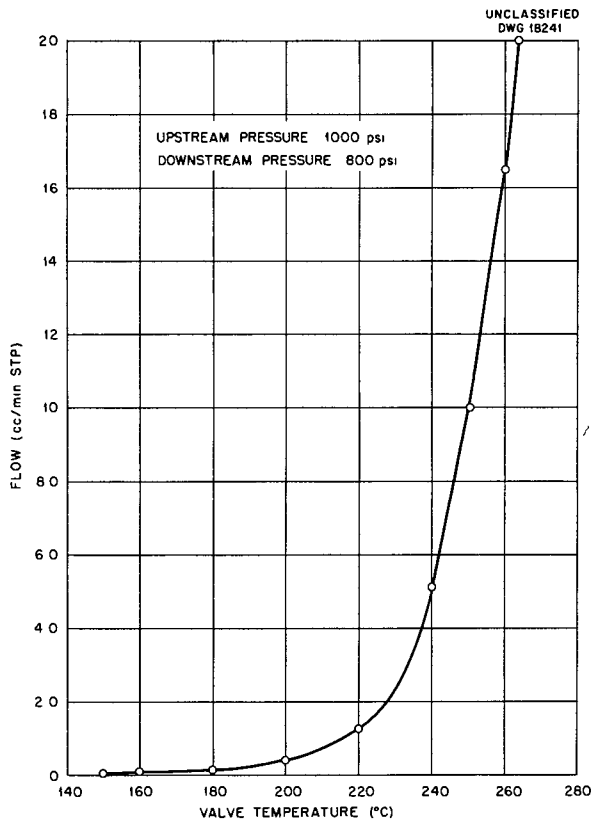

Fig. 24. Valve Temperature vs. Gas Flow.