OAK RIDGE NATIONAL LABORATORY LIBRARY
3 4456 0024815 9

CENTRAL RESEARCH LIBRARY
DOCUMENT COLLECTION

[redacted]

DECLASSIFIED

CLASSIFICATION CHANGED TO:
BY AUTHORITY OF: TID-1113
BY: N Johnstone 10-31-58

ORNL 1513
Waste Disposal

LABORATORY RECORDS

# ORNL RADIOCHEMICAL WASTE EVAPORATOR

## PERFORMANCE EVALUATION

## DECEMBER 1949 THROUGH DECEMBER 1950

E. M. Shank

A-4125AB1

CENTRAL RESEARCH LIBRARY
DOCUMENT COLLECTION
LIBRARY LOAN COPY
DO NOT TRANSFER TO ANOTHER PERSON
If you wish someone else to see this document, send in name with document and the library will arrange a loan.

OAK RIDGE NATIONAL LABORATORY
OPERATED BY
CARBIDE AND CARBON CHEMICALS COMPANY
A DIVISION OF UNION CARBIDE AND CARBON CORPORATION
UCC
POST OFFICE BOX P
OAK RIDGE, TENNESSEE

RESTRICTED DATA
This document contains restricted data as defined in the Atomic Energy Act of 1946. Its transmittal or the disclosure of its contents in any manner to an unauthorized person is prohibited.

CONFIDENTIAL
SECURITY INFORMATION

[redacted]

[redacted] ORNL 7513

[redacted] This document consists of 32 pages.
Copy 4 of 132 copies. Series A.

[redacted]

Contract No. W-7405-eng-26

[redacted] CHEMICAL TECHNOLOGY DIVISION

Pilot Plant Section

[redacted]

[redacted] NL RADIOCHEMICAL WASTE [redacted]

PERFORMANCE EVALUATIO[redacted]

DECEMBER 1949 THROUGH DECEMBER 1950

[redacted]

E. M. Shank

[redacted]

OAK RIDGE NATIONAL LABORATORY
Operated by
CARBIDE AND CARBON CHEMICALS COMPANY
A Division of Union Carbide and Carbon Corporation
Post Office Box P
Oak Ridge, Tennessee

[redacted]

OAK RIDGE NATIONAL LABORATORY LIBRARY
3 4456 0024815 9

TABLE OF CONTENTS


| | | Page Number |
|---|---|---|
| 0.0 | ABSTRACT | 5 |
| 1.0 | INTRODUCTION | 6 |
| 2.0 | SUMMARY | 6 |
| 3.0 | EVAPORATING EQUIPMENT AND OPERATION | 7 |
| | 3.1 Evaporator Facility | 7 |
| | 3.2 Operating Procedure | 9 |
| 4.0 | EFFECT OF EVAPORATOR FEED COMPOSITION | 10 |
| 5.0 | EFFECT OF ANTIFOAM AGENTS | 13 |
| 6.0 | INSTRUMENTATION FOR CONDENSATE ACTIVITY MONITORING AND LEVEL INDICATION | 13 |
| | 6.1 Condensate Activity Monitoring Systems | 13 |
| | 6.11 Conductivity Cell | 13 |
| | 6.12 Geiger Tube | 14 |
| | 6.2 Foam-Level Indicators | 14 |
| | 6.21 Multipoint Electronic Probe System | 15 |
| | 6.22 Continuous Recording Telemeter | 15 |
| 7.0 | USE OF A WATER SPRAY TO REDUCE FOAMING | 16 |
| 8.0 | EQUIPMENT FOR POSSIBLE FUTURE USE | 16 |
| | 8.1 Bubble Cap Column | 16 |
| | 8.2 Peabody Vapor Scrubber | 16 |
| | 8.3 Condensate Resin Column | 16 |
| 9.0 | COST OF EVAPORATOR OPERATION | 17 |
| 10.0 | BIBLIOGRAPHY | 18 |
| 11.0 | APPENDIX | 19 |
| | 11.1 Evaporator Performance Data for Various Types of Feed | 19 |
| | 11.2 Condensate Conductivity Cell | 20 |
| | 11.3 Multipoint Electronic Probe System | 20 |
| | 11.4 Proposed Bubble Cap Scrubber | 20 |
| | 11.5 Proposed Peabody Scrubber | 27 |
| | 11.6 Proposed Condensate Resin Column | 27 |


[redacted]

TABLES


| | | Page Number |
|---|---|---|
| 4.0-1 | Feed Composition and Results of Evaporator Operation | 11 |
| 4.0-2 | Relation between Amount of Solids, Specific Gravity, and Boiling Point of Evaporator Concentrate | 12 |
| 9.0-1 | Estimated Daily Evaporation Cost | 17 |
| 11.1-1 | Summary of Nine Evaporator Runs Made During December, 1949 and January, 1950 | 21 |


FIGURES


| | | |
|---|---|---|
| 3.1-1 | ORNL Radiochemical Waste Evaporator Equipment Flowsheet | 8 |
| 11.2-1 | Conductivity Cell Adapter for Monitor Tank | 22 |
| 11.3-1 | Multipoint Electronic System, Single-Probe Assembly Head | 23 |
| 11.3-2 | Multipoint Electronic System, Seven-Probe Assembly Head | 24 |
| 11.3-3 | Multipoint Electronic Probe Installation | 25 |
| 11.4-1 | Proposed Bubble Cap Column | 26 |
| 11.5-1 | Peabody Vapor Scrubber | 28 |
| 11.5-2 | ORNL Radiochemical Waste Evaporator, Peabody Scrubber Addition | 29 |
| 11.5-3 | Peabody Scrubber Liquid Seal Pot | 30 |
| 11.6-1 | Proposed Condensate Resin Column Layout Plan | 31 |


[redacted]

[redacted]

## 0.0 ABSTRACT

The evaluation of the Oak Ridge National Laboratory radiochemical waste evaporator performance during 1950 is summarized.

## 1.0 INTRODUCTION

The procedure for disposing of radioactive waste at Oak Ridge National Laboratory formerly consisted in allowing the waste to stand in storage tanks until the solid material had settled and/or activity had decayed to permit decanting the supernatant directly to the settling basin when additional storage space was needed. By 1948, ORNL operations and development programs had increased to the extent that an excessive amount of activity was being discharged to the settling basin owing to the lack of sufficient storage space for radioactive waste. It was thought that if a radiochemical waste evaporator could be built which would produce a less active condensate, both the activity discharged to the settling basin and the storage space needed would be considerably lessened.

The Chemical Technology Division designed and supervised construction of such an evaporator, which was turned over to the Operations Division in June, 1949. One engineer from the Chemical Technology Division was assigned on a part-time basis from December, 1949 to December, 1950 to assist the Operations Division in improving evaporator performance.

During the period covered by this report, the major operating difficulty was excessive foaming and entrainment. Because of the large amount of waste on hand which required immediate processing, little attempt was made to carry out controlled experiments on the effects of certain variables on evaporator performance. However, comparisons of the results of routine runs indicated the kind of operation that might be expected under various conditions.

The investigation was made possible by the cooperation and assistance of various persons in the Operations Division, particularly E. J. Witkowski, H. Blauer, and P. O. Orr. In addition, the aid given by the following persons is acknowledged: R. P. Milford, Chemical Technology Division, who designed the condensate resin column installation; K. H. Line, Instrument Department, who developed the liquid level telemeter; W. J. Greter, Instrument Department, who developed the multiprobe foam-level indicator, R. E. Toucey, Instrument Department, who designed the electronic probe assembly heads; I. R. Higgins, Chemical Technology Division, and F. L. McCullough, Chemical Technology Division.

## 2.0 SUMMARY

Operation of the Oak Ridge National Laboratory radiochemical waste evaporator (see Sec. 3.0 for details) has permitted the quantity of activity discharged from the settling basin to be decreased by a factor of 10 during the first year of operation by concentrating the active waste sufficiently to be retained by the existing storage facilities.

Three general types of radioactive waste solutions have been processed: metal waste supernatant, RaLa waste, and composite waste. Evaporation rates ranging from 250 to 600 gph were attained, depending on the type of solution being processed. Metal waste supernatant was the most difficult to process because of its high tendency toward foaming. RaLa waste volume could be reduced the most, but a low evaporation rate had to be used because of the presence of large amounts of volatile radioiodine. The composite wastes permitted the highest average evaporation rates and required less operation supervision than the other two.

Decontamination factors of the condensate varied inversely with evaporation rates, percentage of dissolved solids, and liquid level, and directly with feed activity and free hydroxyl ion concentration. No correlation could be established between solids concentration factors and volume reduction factors or between solids decontamination and activity decontamination.

The antifoam agent Dow Corning A was used successfully as a chemical foam breaker. A 0.1 conductivity cell connected to a Leeds and Northrup Mixromax recorder for condensate activity monitoring and a multipoint electronic probe system for foam-level indication were the most satisfactory instruments tried for these purposes.

## 3.0 EVAPORATING EQUIPMENT AND OPERATION

### 3.1 Evaporator Facility

The evaporator facility is described in detail in ORNL-393; a schematic equipment flowsheet is shown in Fig. 3.1-1.

Radiochemical wastes are batch-transferred by a steam jet from W-5, a 170,000-gal underground concrete surge tank, to a 2150-gal stainless steel feed tank and are then fed continuously through an automatic valve to a 2350-gal pot type evaporator. The feed rate to the evaporator is controlled by a liquid-level controller, as measured in a equalizing nonagitated side arm, set to maintain a volume of approximately 1000 gal in the evaporator. Heat for evaporation is supplied by six independent steam coils, each with a surface area of approximately 150 $ft^2$, and is manually controlled to give the desired evaporation rate. The evaporator overhead passes through a cyclone separator for removal of entrained particles and thence into four parallel downdraft condensers. The condensate is collected in a 350-gal stainless steel tank and is intermittently transferred by gravity to the settling basin. A recycle jet on the condensate catch tank permits recycling of radioactive condensate back to tank W-5 for reprocessing. A water-jet scrubber, actuated by the condenser cooling water, removes noncondensables from the system.

??

33 $ft^2$
(each 150 ft long)

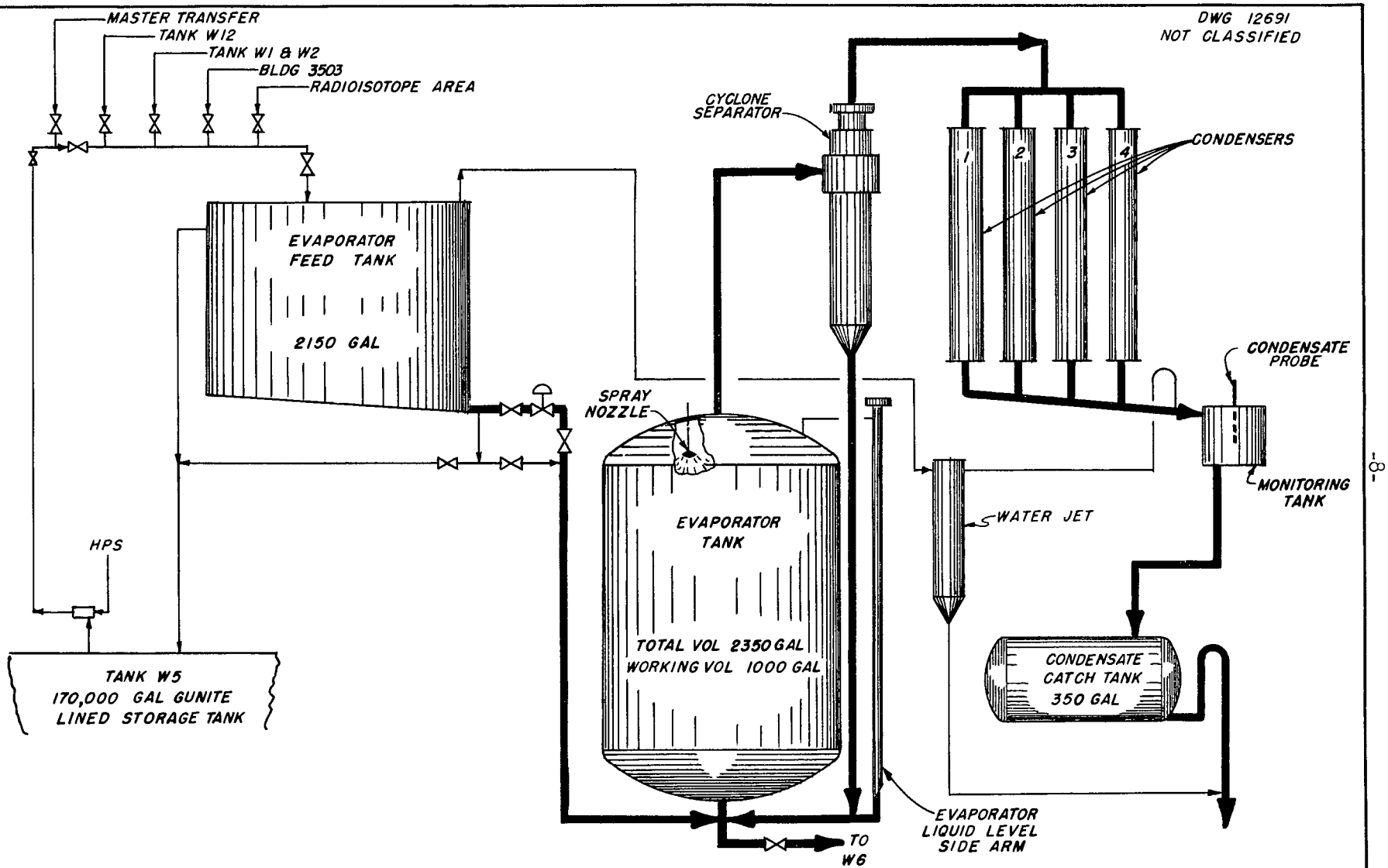


FIG. 31-1
ORNL RADIOCHEMICAL WASTE EVAPORATOR
EQUIPMENT FLOWSHEET

The evaporator, evaporator tank, and condensate catch tank are each provided with reagent-addition, jet-transfer, and service lines.

A 42-gph spray ring was installed by the Operations Division to help control foam (see Sec. 7.0). Outlets to the settling basin for the condensate and recycle lines from the evaporator and catch tank to the tank farm for process solutions were provided. Two feet of concrete shielding was provided for the feed and catch tanks and 3 ft of concrete shielding for the evaporator. The equipment was made of types 309 SCb and 347 stainless steel.

### 3.2 Operating Procedure

The evaporator is operated continuously and requires the full time of one operator. During the runs reported here, the tank-farm waste volume was reduced as rapidly as possible by keeping the downtime to a minimum and by maintaining the highest evaporation rate feasible. The general procedure, which varied slightly with each run, is as follows:

1. Approximately 2000 gal of waste is transferred from tank W-5 to the feed tank and is air-sparged and sampled.

2. Approximately 1000 gal of feed is charged to the evaporator and is air-sparged and sampled.

3. Fifty grams of Dow Corning A antifoam agent is added.

4. Water to the spray ring is turned on at 42 gph.

5. The evaporator is heated slowly until the solution is boiling, and the steam pressure is then adjusted to give the required evaporation rate. Dow Corning A antifoam agent is added continuously by a 1-rpm pump at a rate of approximately 10 grams per hour.

6. The evaporation and feed addition are carried on continuously until the evaporator concentrate reaches a specific gravity of approximately 1.15. (This value is variable and is dictated by previous experience.) When the predetermined concentration has been reached, the feed is shut off and the evaporation is continued until the concentrate reaches a specific gravity of 1.3. The steam is then shut off.

7. The concentrate is transferred to storage tank W-6 by gravity flow.

Composite samples of the feed and condensate are taken during the entire run. After step 6, the evaporator is sparged and a final sample is taken.

At the first indication of a foam-over, the steam is shut off and the condensate containing the foam-over is transferred to tank W-5. The catch tank is washed twice, and the wash is transferred to tank W-5. The evaporator is then started up again.

The evaporator was designed to operate at an evaporation rate of 300 gph. Owing to the accumulated backlog of waste, this rate was exceeded whenever possible. Notwithstanding the adverse operating conditions, the operation of the evaporator permitted the quantity of activity discharged by ORNL to be decreased by a factor of 10 during the initial 12 months of operation. Concentration of the activity-bearing solutions permitted the retention of the activity by existing storage facilities.

## 4.0 EFFECT OF EVAPORATOR FEED COMPOSITION

The waste evaporator processes three general types of radioactive waste solutions: (1) metal waste supernatant, formed in the precipitation of uranium from solution by means of caustic; (2) RaLa waste, a dilute caustic solution from the RaLa off-gas scrubber, containing large quantities of radioiodine; and (3) composite waste, a composite of many waste streams from all parts of the Laboratory. A precise separation of the three types of waste for evaporation is difficult with the existing facilities, owing to the necessity of using an intermediate tank (W-5) for evaporator feed storage. Various types of waste are transferred to this tank prior to their entry into the evaporator; this results in a gradually changing, nonspecific feed composition.

The results obtained from three runs on each type of waste (see Tables 4.0-1 and 11.1-1) are summarized as follows:

1. Metal waste supernatant: Evaporation rates averaging 140 per cent of design were possible, but constant observation was required to prevent foam-overs. Condensate gross beta activity levels higher than 100 c/m/ml were obtained, and the average decontamination factor was 570. The volume reduction factor was low, approximately 5, owing to the high solids content of the feed. The activity spectrum of the condensate was not very different from that of the feed.

2. RaLa waste: Evaporation rates had to be reduced to 75 per cent of design to prevent volatilization of radioiodine and to maintain a condensate iodine beta activity as low as 100 c/m/ml. High volume reduction factors, about 25, were obtained. About 90 per cent of the beta activity in the feed and essentially 100 per cent in the condensate were due to iodine. Foam-overs were minor and were possibly caused by contamination with other types of feed.

Table 4.0-1

Feed Composition and Results of Evaporator Operation*

| Determination | Metal Waste Supernatant | | RaLa Waste | | Composite Waste | |
|---|---|---|---|---|---|---|
| | Feed | Condensate | Feed | Condensate | Feed | Condensate |
| Specific gravity | 1.054 | | 1.015 | | 1.032 | |
| Solids, % | 10.0 | | 3.0 | | 5.6 | |
| pH | 11.0 | | 10.3 | | 11.0 | |
| Al (spectrographic) | Moderate | | Weak | | Weak | |
| Na (spectrographic) | Very Strong | | Very Strong | | Very Strong | |
| Gross β, c/m/ml | $2.5 \times 10^5$ | 100 | $5.6 \times 10^5$ | | $1.2 \times 10^5$ | 10 |
| I β activity, % of total | 25 | 36 | 90 | 100 | 10 | 20 |
| Ru β, activity, % of total | 38 | 33 | --- | --- | 30 | 70 |
| Cs β, activity, % of total | 35 | 26 | --- | --- | 60 | --- |
| β decontamination factor of waste | 570 | | 890 | | 1200 | |
| Volume reduction factor of waste | 5 | | 25 | | 10 | |
| Evaporation rate, gph | 410 | | 280 | | 400 | |

* Average values of three runs on each type of waste.

3. Composite waste: An evaporation rate 130 per cent of design was possible, and volume reduction factors of about 10 were obtained. Decontamination factors averaged $1.2 \times 10^3$, and the activity spectrum in the condensate was essentially the same as that in the feed. Fewer operational difficulties were encountered with this feed than with the others.

Because of the pressing need for maximum evaporation rates and minimum downtime, no attempt was made to operate the evaporator in such a way as to obtain absolute data on the variables. The lack of controlled data and the short period of time spent in evaluation of the evaporator do not permit firm conclusions to be drawn on the effect of feed composition on evaporator operation, but, by comparison of the results of routine runs, certain trends could be observed. In general, the decontamination factors decreased (1) as the evaporation rate increased, (2) as the dissolved solids increased (this was due in part to the increased number of foam-overs, which contaminated the process lines), and (3) as the evaporator liquid level increased (this was due in part to a higher entrainment because of less freeboard and narrower operating limits). The decontamination factors increased (1) as the feed activity increased, and (2) as the free hydroxyl ion concentration increased, particularly in the case of waste containing appreciable quantities of ruthenium and cesium.

Comparison of the solids concentration factors with the volume reduction factors during various runs indicated a ±20 per cent deviation. No correlation between deviation and type of feed was indicated.

A deviation of 100 was indicated between the solids decontamination factor and the activity decontamination factor. However, since the quantity of radioactivity discharged in the condensate is the important consideration solids decontamination is unimportant.

The increase in the boiling points and specific gravity of the concentrate as the percentage of solids increased is given in Table 4.0-2.

Table 4.0-2

**Relation Between Amount of Solids, Specific Gravity, and Boiling Point of Evaporator Concentrate**

| Solids, % | Specific Gravity | Boiling Point, °C |
|---|---|---|
| 1 | 1.01 | 104 |
| 7 | 1.05 | 106 |
| 14 | 1.10 | 107 |
| 19 | 1.15 | 108 |
| 26 | 1.20 | 110 |
| 39 | 1.30 | 112 |

## 5.0 EFFECT OF ANTIFOAM AGENTS

The antifoam agent Dow Corning A was utilized as a chemical foam breaker from the beginning of evaporator operation. A laboratory-scale investigation was carried out on a number of antifoam agents, using feed samples from two evaporator runs, in order to determine if a superior agent was available. Five agents — Nonisol-300, Alrowax-140, Span-20, Oleyl O-8, and Dow Corning 200 — seemed to have properties somewhat superior to those of Dow Corning A. Pound samples of Nonisol-300 and Alrowax-140 were obtained for testing under operating conditions, but unsatisfactory results were obtained with both. Further evaluation of other agents was not attempted. No attempt was made to evaluate the efficiency of antifoam agents in the plant-scale evaporator owing to the lack of a foam-level indicator at the time of this investigation (see Sec. 6.2).

## 6.0 INSTRUMENTATION FOR CONDENSATE ACTIVITY MONITORING AND FOAM-LEVEL INDICATOR

### 6.1 Condensate Activity Monitoring Systems

#### 6.11 Conductivity Cell

The condensate activity monitoring system found most satisfactory was a 0.1 conductivity cell connected to a Leeds and Northrup Micromax (resistance) recorder alarm. Correct positioning of this cell in the free space above the condensate in the monitoring tank (see Fig. 3.1-1) caused a set deflection of approximately 30 on an L and N No. 307 (logarithmic) chart. The conductivity probe provided a definite indication of foam-overs and permitted greater decontamination and greater activity control than did a Geiger tube system previously used.

All foam-overs that were indicated by visual observation of the catch tank sample gave a full scale deflection of the recorder pen and were usually indicated by the conductivity probe approximately 5 min before they were indicated by the sampler. Although this preindication of foam-overs was not consistent, observation of the pen movements was useful in operational control and in reducing the number of foam-overs.

Comparison between chart readings and beta analyses of the samples showed that a beta activity of $10^3$ c/m/ml (1/4 to 3/4 scale deflection) in the vapor resulting from high entrainment was indicated at chart readings below 10. Comparison of chart deflections in the 500 to 20 range with beta activity analyses of the samples showed no noticeable difference in activity of the samples over this range of chart deflections.

It is recommended that, with the 0.1 conductivity cell, the alarm point be set at a scale reading of 10 on an L and N No. 307 chart. The recording instrument should be mounted in such a way as to permit easy observation. All condensate having a conductivity greater than that at the alarm point should be recycled.

The conductivity probe was not entirely satisfactory in the evaporation of RaLa waste because of the initial low ionic concentration and high radioiodine concentration. Condensate with gross beta activity in excess of $10^3$ c/m/ml, 90 per cent of which was due to iodine, occurred without exceeding the established set point for conductivity (10 on the scale). Consequently, with RaLa waste, the evaporation rate should be kept low (approximately 75 per cent of design) to prevent excessive discharge of activity.

With the original conductivity cell installation, high average conductivity readings were observed on the Micromax recorder at evaporation rates above 300 gph. They were found to be due to incorrect positioning of the conductivity probe in the condensate monitor tank. With evaporation rates below 300 gph, the probe became uncovered and gave low conductivity readings. With evaporation rates above 300 gph, the probe was covered. This, together with the increase in entrainment that occurred, caused the high conductivity reading. When the probe was lowered in the monitor tank, satisfactory results were obtained (see Sec. 11.2).

### 6.12 Geiger Tube

The initial condensate activity monitoring system used a Geiger tube suspended over the condensate. Excessive background resulted as a result of foam-overs and of the plating-out of activity on the tube itself, and the Geiger tube system was replaced by the 0.1 conductivity cell.

## 6.2 Foam-Level Indicators

Remote indication of the evaporator foam level was considered desirable early in the evaporator operation to provide more efficient operation and control and to permit plant-scale evaluation of antifoam agents. Electronic probes were considered to offer the best possibilities for satisfactory remote operation. Visual observation of the foam level was not feasible because of the high levels of radiation involved and the consequent danger to the observer, and photoelectric cells would have become inoperable because of attack by gamma radiation.

It was recommended by the Instrument Department that for electronic instruments to be used in measuring fluid levels, the conductivity of the fluid must be equal to or greater than that of a 0.05 $\underline{M}$ $H_2SO_4$ solution. Tests on the evaporator foam showed its conductivity to be about twice that of 0.05 $\underline{M}$ $H_2SO_4$ and indicated that electronic instruments would be suitable for evaporator foam-level measurements.

### 6.21 Multipoint Electronic Probe System

A multipoint electronic probe assembly was installed (see Sec. 11.3) and was still giving satisfactory, maintenance-free service after having been in use for 24 months. It provided valuable assistance in decreasing foam-overs and was useful in maintaining the maximum evaporation rate.

A single probe was mounted at the vapor outlet and extended 18 in. down from the top. The prime purpose of this probe was to provide control of the evaporator by actuating an alarm when the foam level reached the probe. A seven-probe assembly was mounted near the center of the evaporator and provided foam-level indication at 5-in. intervals. A satisfactory mounting head (see Sec. 11.3) utilizing a Teflon insulator was designed, fabricated, and installed after the original probe assembly proved to be unsatisfactory because of inadequate insulation between the probe and mounting head. Several insulating compounds that were investigated to alleviate the situation proved to be inadequate after 12 to 15 hr operation.

Semi-automatic control of the multipoint electronic probe assembly could be obtained by installing in the steam supply line an on-off air-operated diaphragm valve that would be operated by the top and bottom probes. As the foam reached the level of the top probe, steam could be automatically shut off and would remain off until the foam level dropped below the bottom probe. Lack of maintenance personnel has prevented installation of this valve.

Field evaluation of antifoam agents would be possible with the multipoint probe assembly (see Sec. 5.0).

### 6.22 Continuous Recording Telemeter

Prior to installation of the multipoint electronic probe assembly, a telemeter that had been developed by the Instrument Department for measuing remotely the liquid level of highly radioactive solutions was tested for use as a foam level indicator for the evaporator. Results of the tests indicated that it would not be satisfactory.

The telemeter consisted essentially of a 100-megacycle oscillator, two quarter-wave stainless steel coaxial lines (a pipe and a rod) into which the oscillator output was coupled, an amplifier, a motor, and an indicating meter. It was determined that the ratio of the diameters of the pipe and rod would be determined by the physical properties of the fluid whose level was being measured. The maximum length of the probe appeared to be about 5 ft.

Studies on properties of the foam indicated that the foam level in a 6-in. pipe (estimated maximum diameter permissible) differed from that in the main tank in both magnitude and direction, and that the magnitude of the deviation was dependent upon the position of the test pipe with respect to the heating element. For this reason the telemeter was not studied further.

## 7.0 USE OF A WATER SPRAY TO REDUCE FOAMING

A solid-cone water-spray nozzle that could deliver up to 42 gph was installed by the Operations Division in the top of the evaporator as a foam breaker. The angle of spray is such as to provide a solid blanket of water above the surface area of the liquid. The spray appeared to be the most expeditious of many possible modifications owing to its simplicity. Although no direct evaluation of the efficiency of the spray as a foam breaker was made, an apparent decrease in the frequency of foam-overs and a higher evaporation rate before a foam-over occurred was realized.

## 8.0 EQUIPMENT FOR POSSIBLE FUTURE USE

### 8.1 Bubble Cap Column

As a result of work done at the other AEC sites, it was thought that an additional decontamination factor of 100 might be obtained by passing the evaporator vapor through a scrubber. A five-plate bubble cap column (see Sec. 11.4) was designed for scrubbing the evaporator vapor. At evaporation rates of 600 gph, a 5-ft-diameter column was required to maintain the desired low vapor velocity. Foaming is accelerated by bubble cap columns when foam-over solutions reach the plates. The need for a foam breaker or a foam control method was thereby indicated or a different type of de-entrainer and scrubber would be necessary. Because of the large-diameter column that was required and the lack of definite foam-over indication or foam control available at the time, no further development of the bubble cap column was attempted.

### 8.2 Peabody Vapor Scrubber

Information furnished by the Peabody Engineering Corporation indicated that a 2.5-ft-diameter three-plate Peabody scrubber (see Sec. 11.5) could be expected to serve as both a foam breaker and an efficient scrubber for removal of entrained particles. A Peabody impingement type baffle plate scrubber was ordered, but by the time it arrived, in March, 1951, a re-evaluation of the situation (11, 12) and the shortage of man power made installation of it unjustifiable.

### 8.3 Condensate Resin Column

Late in 1949, laboratory and design work was started on an evaporator condensate resin column installation, the facility to be housed in an extension of Building 3506 (see Sec. 11.6). Laboratory data indicated that sodium and

aluminum ions are more strongly bound by ion exchange resin than are the radioactive ions of ruthenium, cesium, and other fission products. The capacity of the cation exchange resin IRA-400, as established in the laboratory, is approximately 60 grams of sodium per liter of resin, and only 40 gal of foam-over solution could be processed by the designed resin column before the previously absorbed activity might be eluted by the sodium and aluminum in the foam-over. Since by this time operation of the evaporator had improved to such an extent that an average decontamination factor of $10^3$ was routine and condensate with a beta activity of less than 100 c/m/ml was being discharged from all types of feed material, further design of the resin column facility was deferred.

## 9.0 COST OF EVAPORATOR OPERATION

The cost of evaporator operation was estimated to be approximately $335 per day, or approximately $0.047 per gallon. The basis for this estimate is given in Table 9.0-1.

Table 9.0-1

Estimated* Daily Evaporation Cost

| | Cost |
|---|---|
| Steam (100,000 lb/day) | $200.00 |
| Cooling water (144,000 gal/day) | 11.50 |
| Antifoam agent (1 lb/day) | 7.00 |
| Maintenance | 8.00 |
| Reagents | 3.00 |
| One operator (24 hr) | 96.00 |
| | 335.50 |
| Cost per gallon, approximate | 0.047 |
| Cost per pound, approximate | 0.006 |

* Based on a 300-gph evaporation rate, 60% steam efficiency, $2 per 1000 lb of steam cost, evaporator on line 20 hr per day. This estimate does not include equipment depreciation or recycle cost.

E. M. Shank

E. M. Shank

EMS/mlc

## 10.0 BIBLIOGRAPHY


1. ORNL-328 "Liquid Waste Disposal at Oak Ridge National Laboratory, by F. N. Browder, March 28, 1949.

2. ORNL-224 "Pilot Model Evaporator for Concentration of Radioactive Chemical Wastes," by S. E. Beall, Feb. 7, 1949.

3. ORNL-393 "Design and Initial Operation of the Radiochemical Waste Evaporator," by E. L. Nicholson, Sept. 22, 1949.

4. ORNL-163 "Minutes of Conference on Liquid Waste Disposal, August 23-25, 1948," Nov. 2, 1948.

5. ORNL-562 "Studies of the "White Oak Creek Drainage System," by L. R. Setter and O. W. Kochtitzky, Jan. 30, 1950.

6. CF-49-6-123 "Recommendations for Liquid Waste System Alterations and Additions, Oak Ridge National Laboratory," by F. N. Browder, Aug. 2, 1949.

7. CF-50-6-52 "Resin Column for Chemical Waste Evaporator Condensate," by F. L. Culler, June 7, 1950.

8. CF-50-3-179 "Review of Resin Column Installation," by F. L. Culler, March 30, 1950.

9. ORNL-722 "Control of Foaming During Evaporation of Radiochemical Wastes," by T. C. Runion, June 27, 1950.

10. CF-50-6-17 "Condensate Conductivity Cell Installation," by E. M. Shank, June, 1950.

11. CF-51-8-205 "Status of ORNL Liquid Waste Disposal System - Minutes of Meeting Held 8-8-51," by W. K. Eister.

12. CF-51-7-53 "Status of ORNL Radiochemical Liquid Waste Processing, Storage, and Disposal Programs, Minutes of Meeting Held on July 5, 1951," by W. K. Eister.

13. CF-50-1-33 "ORNL Waste Processing and Disposal Program," by W. K. Eister, Jan. 5, 1950.

14. ORNL-873 "Health Physics Division Radioactive Waste Disposal Research and Development Section Progress Report July 1 - September 30, 1950," by R. J. Morton, Nov. 21, 1950.

15. ORNL-624, 655, 675, 702, 741, 774, 850, 885, 962 Chemical Technology Division Pilot Plant Section Reports for January, 1950 through January, 1951.

## 11.0 APPENDIX

### 11.1 Evaporator Performance Data for Various Types of Feed

The detailed results of nine evaporator runs are given in Table 11.1-1. The effect on operation of variations in the evaporator feed is shown. The general description and the method of calculation for the data given in Table 11.1-1 is as follows:

1. Metal waste supernatant effects on evaporator feed are noticed after a transfer of metal waste supernatant is made to tank W-5. The waste is analyzed for free base by adding excess hydrochloric acid and back-titrating to a potentiometric end-point.

   RaLa waste effects on evaporator feed are felt after a RaLa start-up. Automatic transfer of the RaLa dissolver scrubber water to tank W-5 is maintained. The waste is analyzed for free base by titrating with hydrochloric acid to a potentiometric endpoint.

   Composite waste is waste from other than distinct processing operations. The waste is not analyzed for free base.

2. The average evaporation rate is determined by dividing the volume of feed (in gallons) fed during the run by the length (in hours) of the run.

3. The length of a run is from initial boiling time to time the steam is shut off.

4. Beta and gamma activity is reported in c/m/ml with counting at 10.18 per cent geometry.

5. The following formulae are used in the calculations:

$$\text{Decontamination factors} = \frac{\text{Gross } \beta \text{ in feed}}{\text{Gross } \beta \text{ in condensate}} \times \frac{\text{Vol. of feed}}{\text{Vol. of condensate}}$$

$$\text{Volume reduction} = \frac{\text{Vol. of feed - vol. of concentrate}}{\text{Vol. of concentrate}}$$

$$\text{Volume of condensate} = \text{Vol. of feed - vol. of concentrate} + 42 \times \text{run time}$$

where,

Volume is in gallons
Time is in hours
42 equals the volume of water added for foam breaking

## 11.2 Condensate Conductivity Cell

The installation of the conductivity cell was accomplished by fabricating a new lid, containing an adapter fitting for the probe, for the existing monitor tank (see Fig. 11.2-1). The adapter nut permitted easy removal of the probe for maintenance while a Teflon gasket maintained a tight seal during operation (see Sec. 6.11).

## 11.3 Multipoint Electronic Probe System

The Teflon-insulated mounting head (see Sec. 6.21) for the single-probe assembly is shown in Fig. 11.3-1; that for the seven-probe assembly is shown in Fig. 11.3-2. Details of the two heads are given in IDO drawings RC-542 and in Instrument Department drawing Q-1131-1, respectively, which are not reproduced here. A schematic drawing of the installation is shown in Fig. 11.3-3.

## 11.4 Proposed Bubble Cap Scrubber

The proposed bubble cap vapor scrubber is shown in Fig. 11.4-1; details are given on Engineering drawing D-8228, which is not reproduced here.

The scrubber would consist of an all-welded cylindrical vertical vessel, 5 ft i.d. and approximately 16 ft high, with standard dished ends and would be constructed entirely of type 304 ELC stainless steel. The five plates are welded in place, on 2-ft spacing, and each contains fifty-nine 4-in-o.d. individually held caps. Each cap has a serrated edge with a total serrated area equal to the 2-3/4-in.-diameter riser area. Each plate would retain 2 in. of liquid and would provide a 7/8-in. cap edge submergence. A 6-in.-diameter downspout, a 1-in. IPS drain nozzle, and a 2-in. IPS nozzle are provided for each plate. Reflux of water is provided to plates 1 and 2, with the reflux volume controlled by conductivity probes to be installed on each plate. A 10-in.-i.d. side flange bottom vapor inlet and a 12-in.-i.d. side flange top vapor outlet are provided. A demistifier is included within the scrubber for de-entrainment of the vapor.

**Table 11.1-1**

**Summary of Nine Evaporator Runs Made During December, 1949 and January, 1950***

| | Metal Waste Supernatant | | | Composite Waste | | | RaLa Waste | | |
|---|---|---|---|---|---|---|---|---|---|
| Run | 179 | 180 | 181 | 191 | 192 | 193 | 238 | 239 | 240 |
| Feed | pH 11.0, free base 0.8 N | pH 11.0, free base 2.1 N | pH 11.0, free base 0.8 N | pH 11.0 | pH 11.0 | pH 11.0 | pH 11.0, free base 0.06 N | pH 10.0, free base 0.02 N | pH 10.0, free base 0.06 N |
| Average Evaporation Rate, gph | 420 | 410 | 410 | 390 | 380 | 420 | 240 | 340 | 260 |
| Length of Run, hr | 6.5 | 5.0 | 6.0 | 14 | 9.3 | 6.8 | 5.5 | 45 | 26 |
| Feed Constituents | | | | | | | | | |
| Gross β | $2.70\times10^5$ | $2.60\times10^5$ | $2.3\times10^5$ | $7.3\times10^4$ | $1.3\times10^5$ | $1.5\times10^5$ | $4.7\times10^5$ | $6.6\times10^5$ | $5.5\times10^5$ |
| Gross γ | 830 | 840 | 75 | 250 | 430 | 490 | $1.6\times10^3$ | $1.8\times10^3$ | $1.5\times10^3$ |
| I β | $7.1\times10^5$ | $6.3\times10^4$ | $5.8\times10^4$ | $5.6\times10^3$ | $4.3\times10^4$ | $3.6\times10^4$ | $4.2\times10^5$ | $6.2\times10^5$ | $5.5\times10^5$ |
| Ru β | $1.0\times10^4$ | $9.3\times10^4$ | $8.3\times10^4$ | $3.2\times10^4$ | $6.0\times10^4$ | $6.8\times10^4$ | $2.9\times10^3$ | $2.9\times10^3$ | $3.0\times10^3$ |
| Cs β | $9.2\times10^4$ | $9.0\times10^4$ | $7.4\times10^4$ | $3.6\times10^4$ | $6.8\times10^4$ | $8.0\times10^4$ | $1.0\times10^4$ | $1.0\times10^4$ | $1.0\times10^4$ |
| Vol., gal | 2860 | 2590 | 2580 | 5260 | 3530 | 2990 | 11,400 | 13,900 | 6000 |
| Condensate Constituents | | | | | | | | | |
| Gross β | $1.9\times10^3$ | 230 | $1.6\times10^3$ | 110 | 140 | 75 | 720 | 550 | 480 |
| Gross γ** | | | | | | | | | |
| I β | 560 | 100 | 420 | 20 | 10 | 10 | 490 | 550 | 490 |
| Ru β | 690 | 60 | 450 | 10 | 45 | 10 | 25 | 10 | 10 |
| Cs β | 460 | 40 | 490 | 90 | 80 | 40 | 100 | 20 | 30 |
| Vol., gal | 2740 | 2040 | 2470 | 5460 | 3540 | 2860 | 13,000 | 15,000 | 6740 |
| Decontamination Factors | | | | | | | | | |
| Gross β | 150 | 1400 | 150 | 640 | 930 | 2100 | 560 | 1100 | 1000 |
| Gross γ** | | | | | | | | | |
| I β | 130 | 800 | 140 | 270 | 430 | 380 | 740 | 1000 | 1000 |
| Ru β | 150 | 2000 | 190 | 3100 | 1300 | 7100 | 100 | 270 | 370 |
| Cs β | 210 | 2900 | 160 | 390 | 850 | 2100 | 90 | 450 | 300 |
| Volume Reduction Factor | 6.3 | 2.4 | 6.0 | 12.7 | 8.5 | 6.2 | 28.4 | 32.0 | 15.5 |

*For general description and methods of calculation (see Sec. 11.1).
**No gamma count made.

DWG 12698
NOT CLASSIFIED

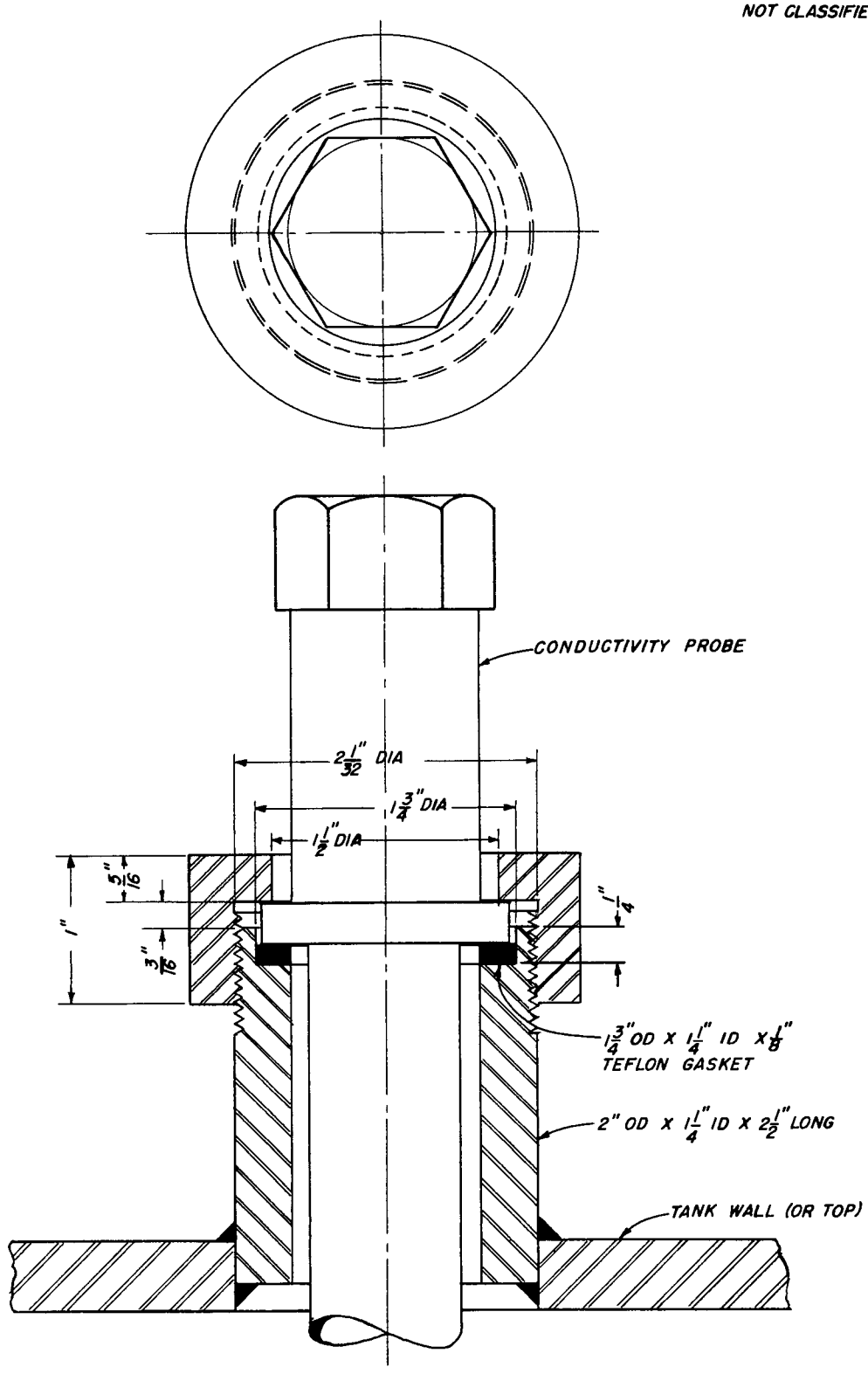


FIG. 11.2-1
CONDUCTIVITY CELL ADAPTOR FOR MONITOR TANK

DWG 12699
NOT CLASSIFIED

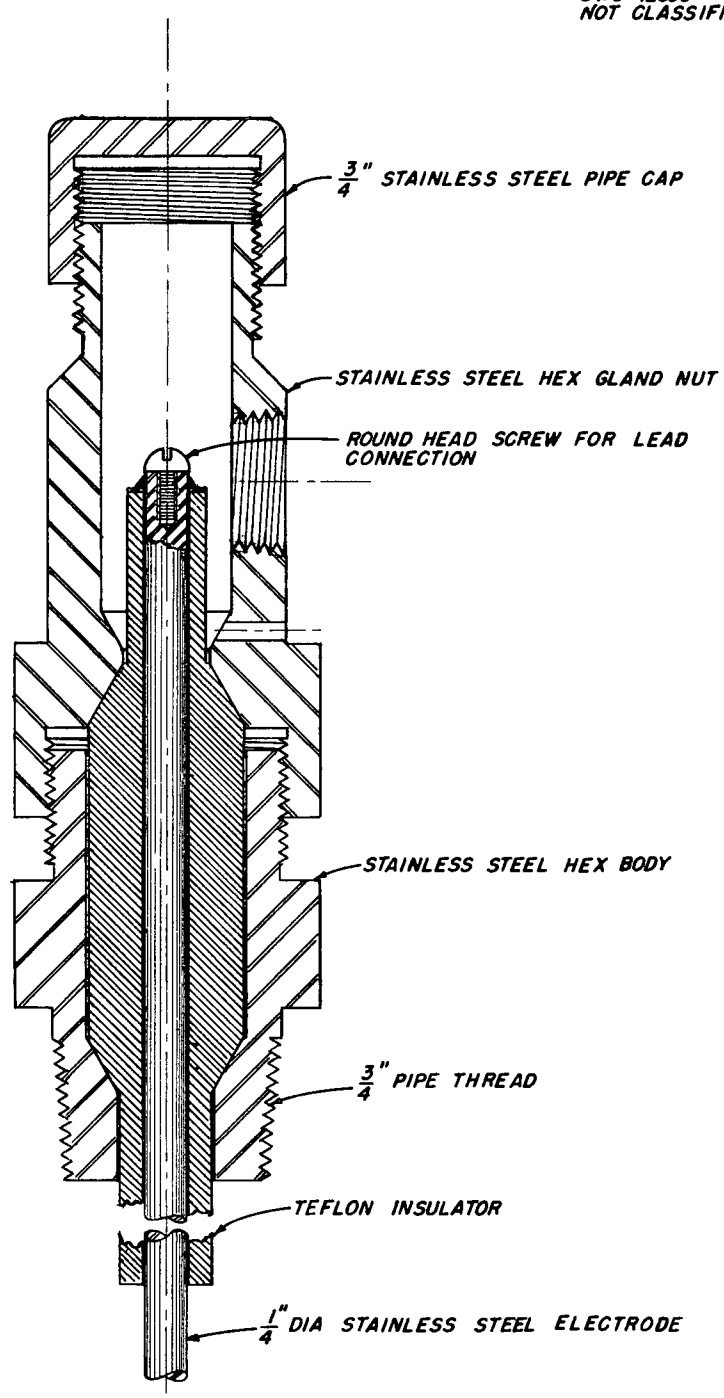


FIG. 11.3-1
MULTIPOINT ELECTRONIC SYSTEM, SINGLE-PROBE ASSEMBLY HEAD

DWG 12700 A
NOT CLASSIFIED

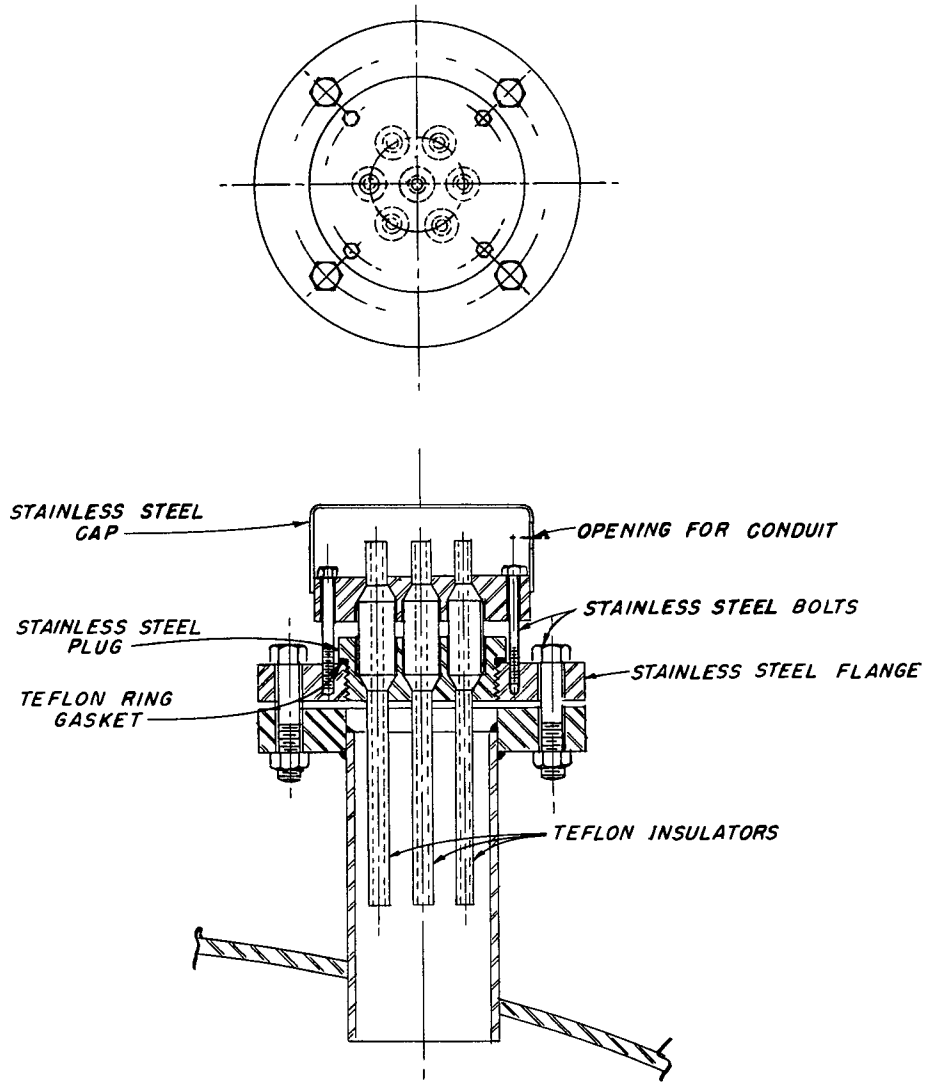


FIG. 11 3-2

MULTIPOINT ELECTRONIC SYSTEM
SEVEN-PROBE ASSEMBLY HEAD

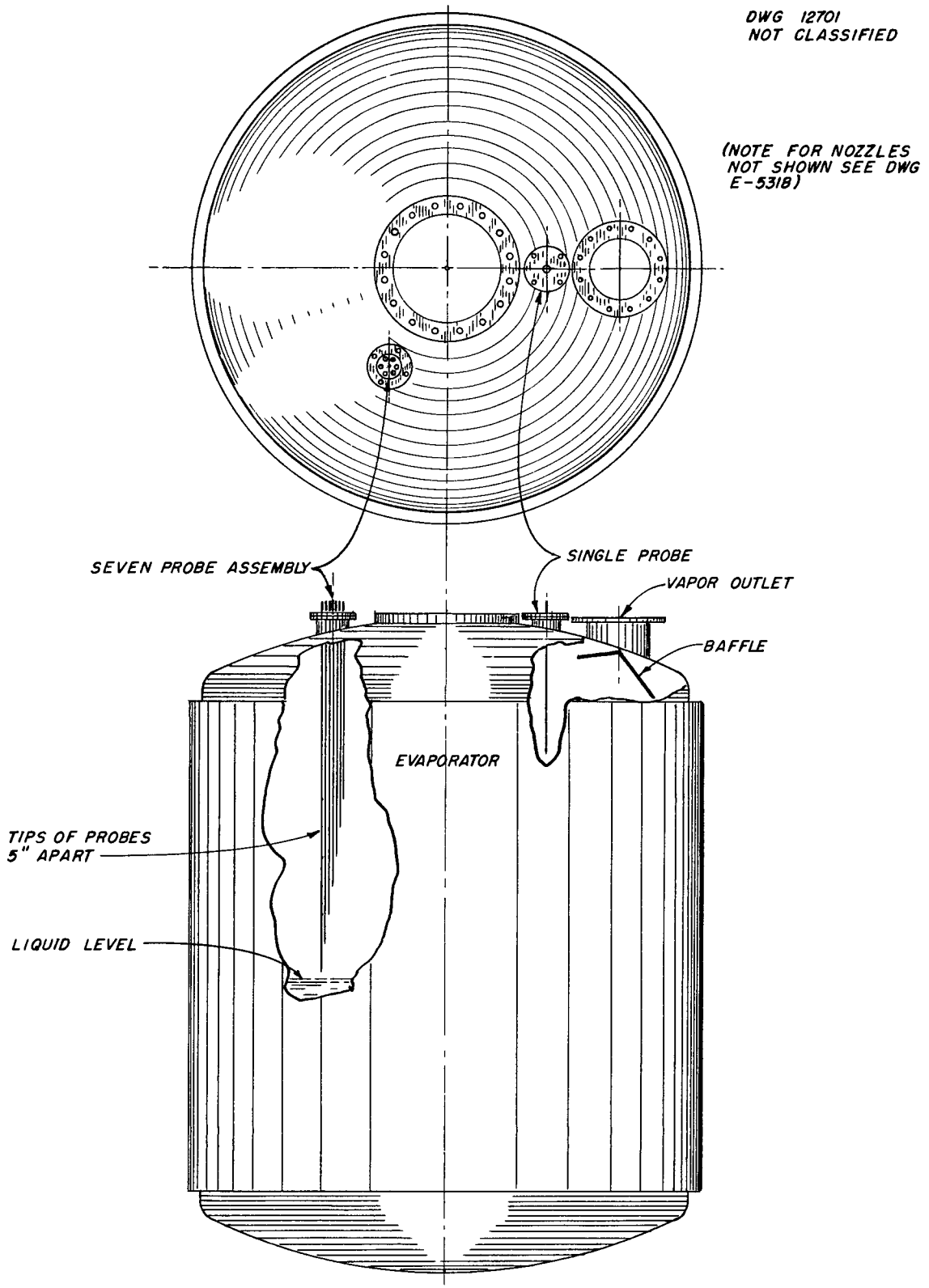


FIG. 11.3-3
SINGLE & MULTIPOINT PROBE INSTALLATION

DWG 12694
NOT CLASSIFIED

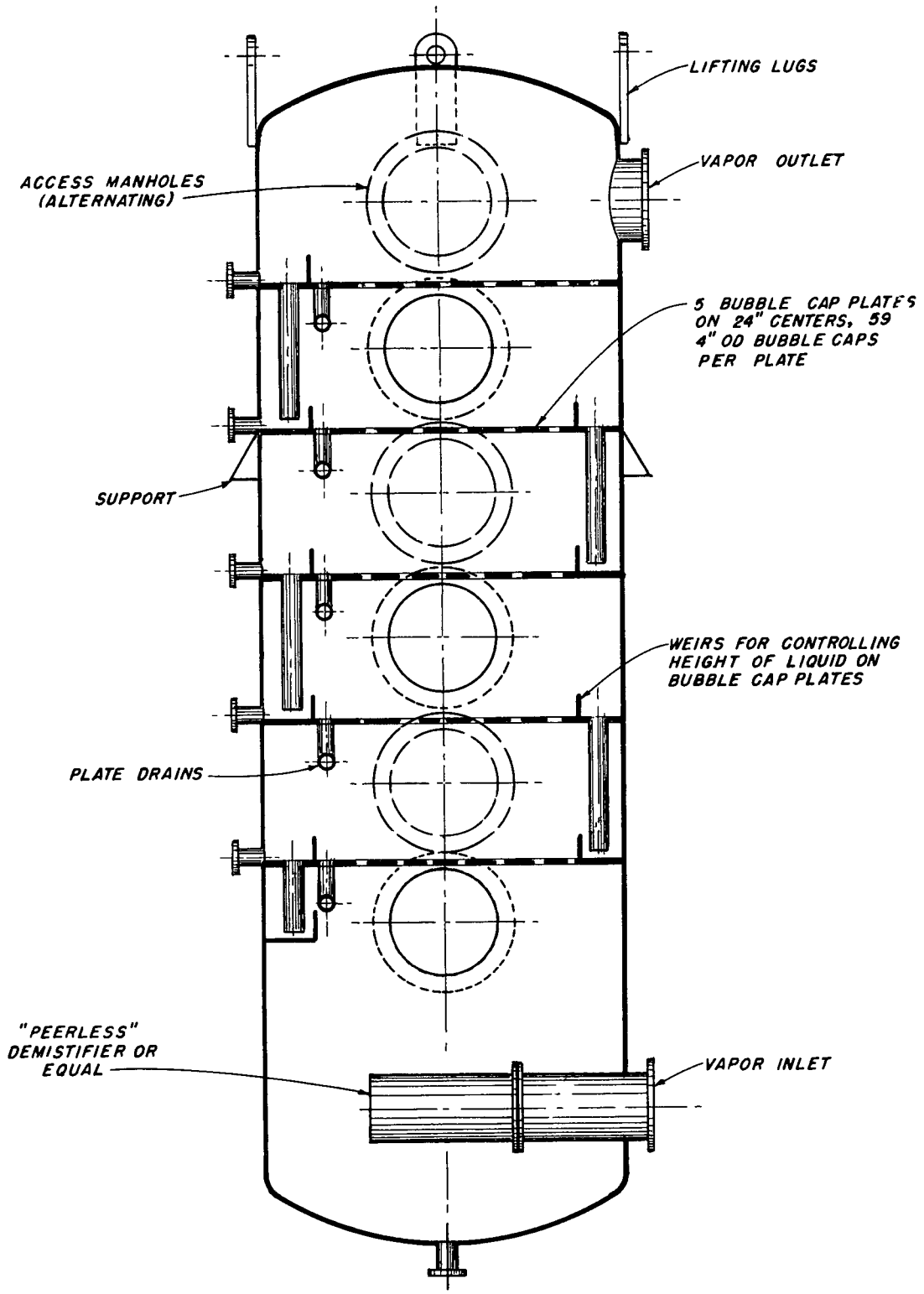


FIG 11.4-1

PROPOSED BUBBLE CAP COLUMN

## 11.5 Proposed Peabody Scrubber

The proposed Peabody vapor scrubber is shown in Fig. 11.5-1; details are given on Peabody Engineering Corporation drawing H-595-3B, which is not reproduced here. The proposed alterations to the evaporator are shown in Figs. 11.5-2 and 11.5-3; details are given on ORNL Engineering Department drawings D-10183, C-10184, B-10185, and B-10186.

The scrubber is an all-welded cylindrical vertical vessel, 2-1/2 ft i.d. and approximately 12 ft high, and is constructed entirely of type 340 ELC stainless steel. Three Peabody impingement type baffle plates are welded within the body on 18-in. centers. Specifications for the scrubber are given in detail in ORNL requisition 110298 and purchase order WCX-A-20226.

Special nozzles provided for evaluation include pressure taps between adjacent plates for pressure drop determinations; four 18-in.-diameter manholes to permit inspection of each plate; a 2-in. IPS nozzle for each plate, flush with the top of the plate, to permit installation of a conductivity probe for evaluation and control; a 1-in.-IPS drain line from each plate to permit operation of any plate or combination of plates either wet or dry as desired; a 4-in. IPS porthole opposite manhole No. 3 to permit photographic or light studies; and temperature and pressure taps at the top for overall pressure- and temperature-drop evaluation.

The proposed installation of the scrubber with the evaporator would provide operation at a slight negative pressure. The pressure drop across the scrubber, at 600 gph rate, is estimated at 10 to 12 in. of water. A vacuum of 20 to 25 in. of water, supplied by the water jet scrubber, would provide 10 to 12 in. of water vacuum on the evaporator, thus decreasing the probability of radioactive vapors being discharged to the atmosphere.

## 11.6 Proposed Condensate Resin Column

Figure 11.6-1 shows the proposed condensate ion-exchange column arrangement. The use of two parallel lines of exchangers is mandatory if continuous processing of the condensate is to be accomplished. A design capacity of 600 gph was specified for each line, as this is the estimated maximum capacity of the evaporator.

Construction of the cation exchanger and auxiliary equipment was specified to be such as to permit regeneration with nitric, sulfuric, or phosphoric acid. Laboratory results were incomplete at this time, necessitating the multi-regenerant specification. Saran-lined equipment, including lines and valves, was the only type available which could be used for both the anion and cation exchangers.

Development of the ion-exchange procedure for condensate cleanup was indefinitely deferred prior to the beginning of detailed equipment and housing design.

DWG 12695
NOT CLASSIFIED

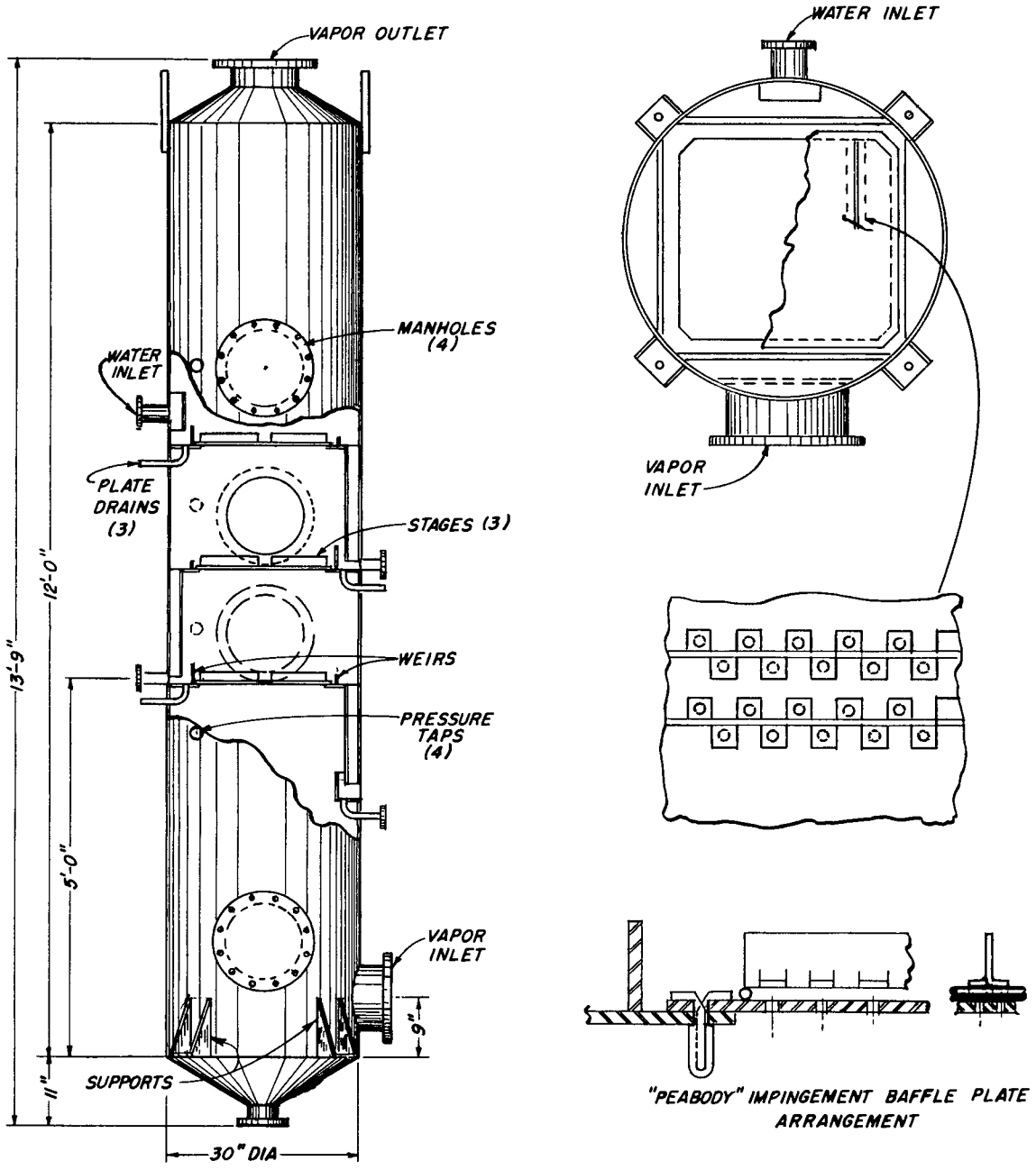


FIG. 11.5-1
"PEABODY" VAPOR SCRUBBER

DWG 12696
NOT CLASSIFIED

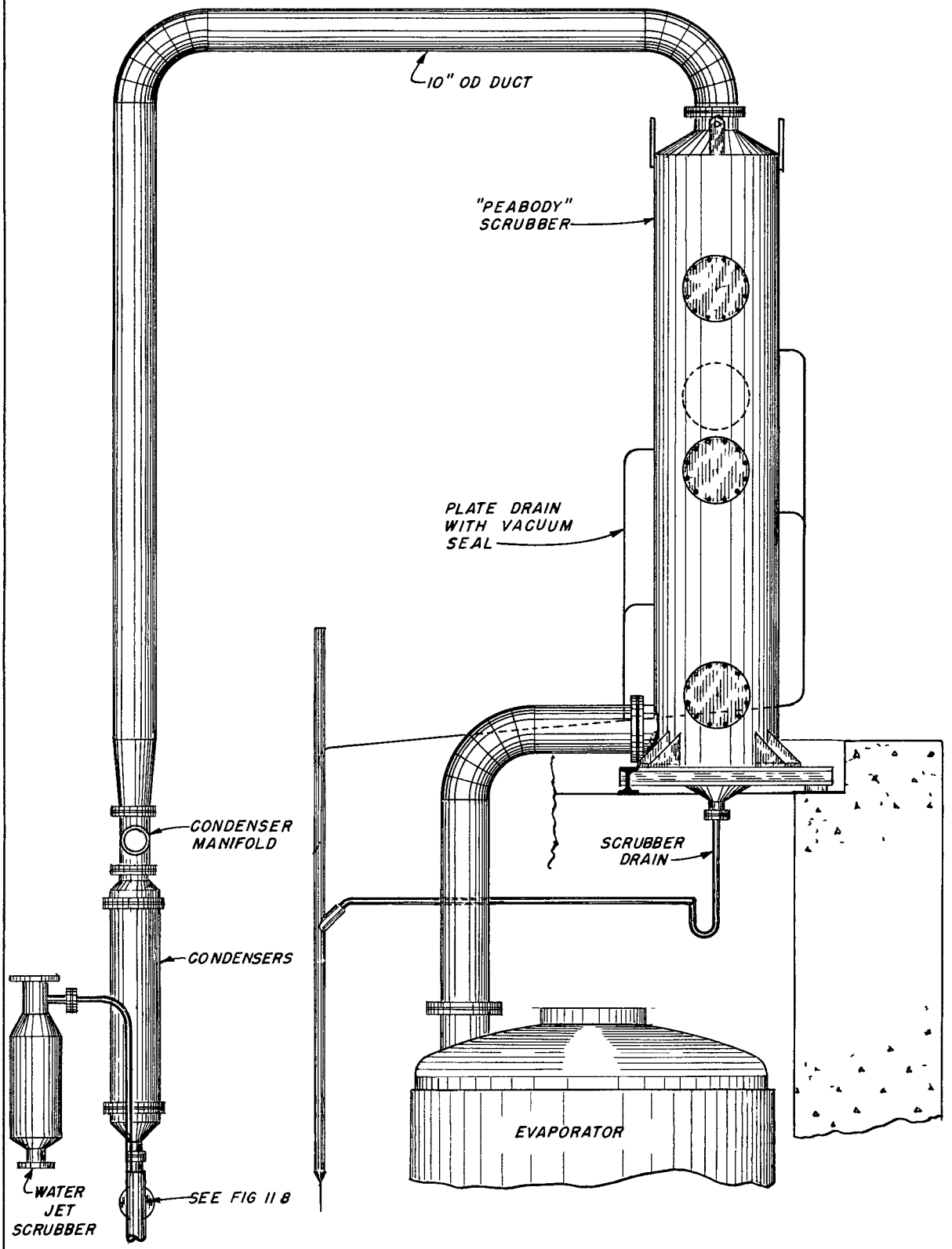


FIG. 11.5-2
ORNL RADIOCHEMICAL WASTE EVAPORATOR
"PEABODY" SCRUBBER ADITION

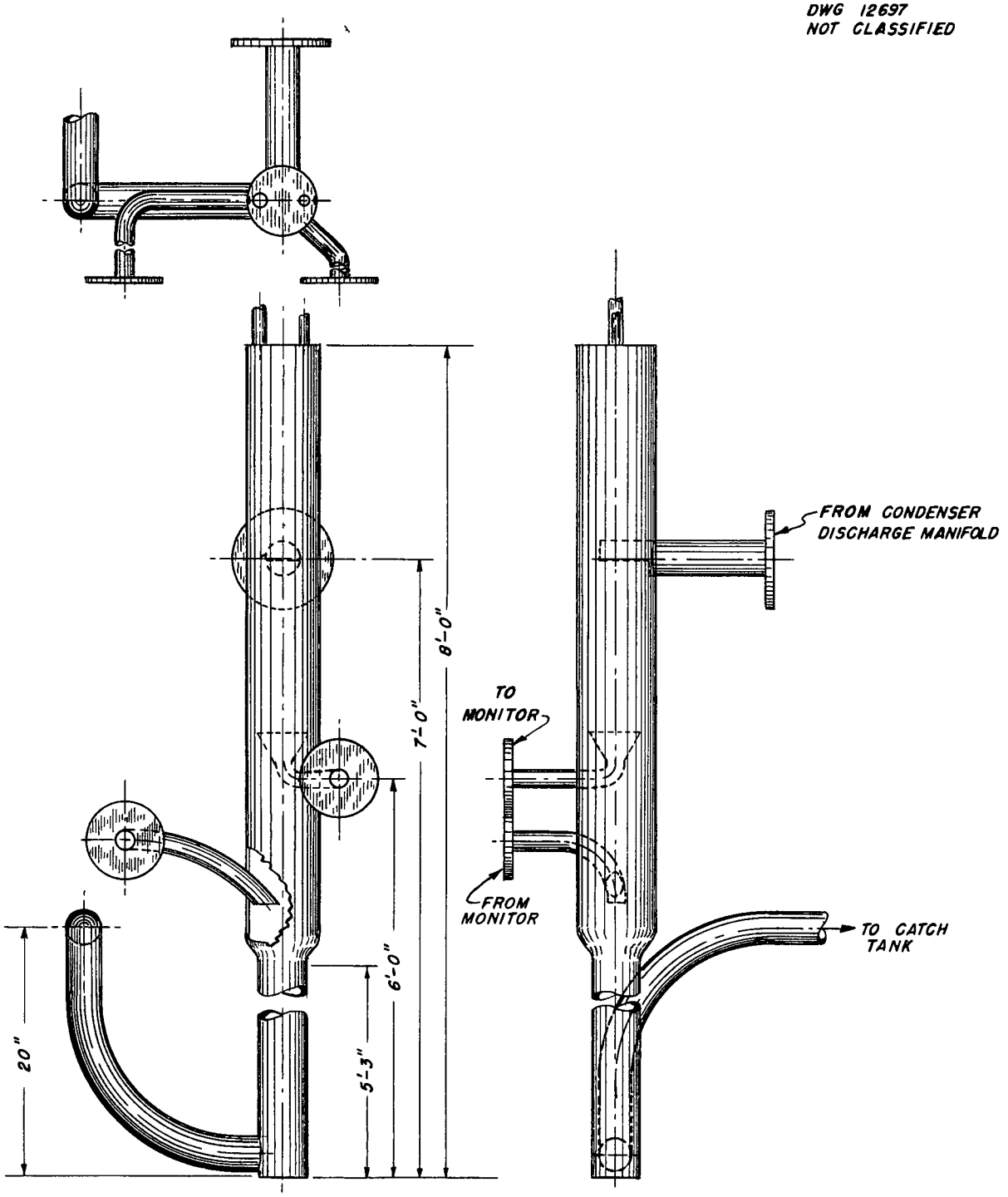


FIG. 115-3
PEABODY SCRUBBER LIQUID SEAL POT

DWG 12693
NOT CLASSIFIED

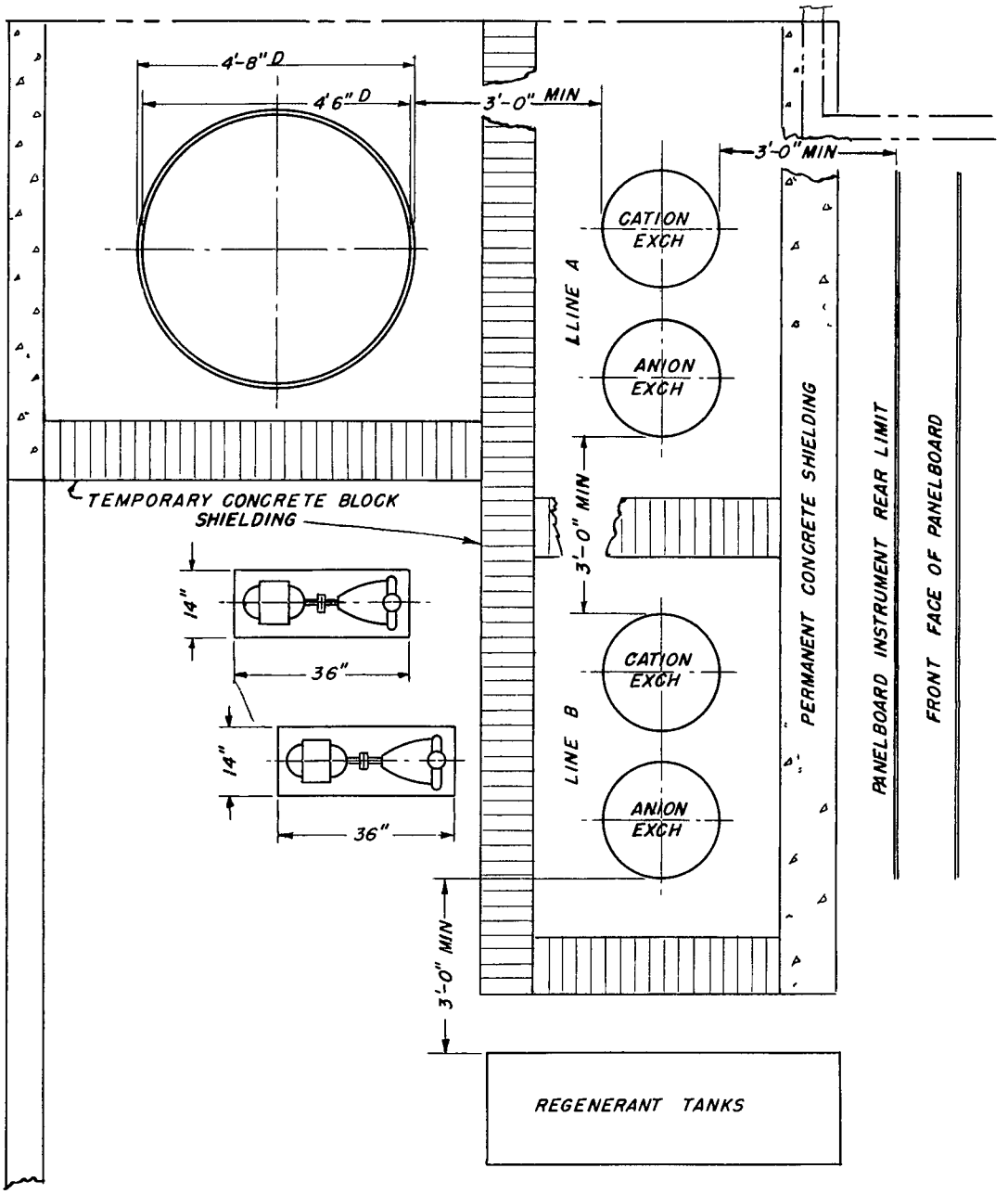


FIG 116-1

PROPOSED CONDENSATE RESIN COLUMN LAYOUT PLAN