[redacted]

CENTRAL RESEARCH LIBRARY
DOCUMENT COLLECTION

MARTIN MARIETTA ENERGY SYSTEMS LIBRARIES
3 4456 0349509 1

ORNL 1543 4A
Technology - Feed Materials

[redacted]

LABORATORY RECORDS
1954

APPLICATION OF THE PULSE COLUMN FOR URANIUM RECOVERY FROM K-25 WASTES

E. Lieberman
A. C. Jealous

CLASSIFICATION CHANGED TO: UNCLASSIFIED
BY AUTHORITY OF: TID-1228
BY: Bowman 3/14/60

CENTRAL RESEARCH LIBRARY
DOCUMENT COLLECTION

LIBRARY LOAN COPY

DO NOT TRANSFER TO ANOTHER PERSON

If you wish someone else to see this document, send in name with document and the library will arrange a loan.

OAK RIDGE NATIONAL LABORATORY
OPERATED BY
CARBIDE AND CARBON CHEMICALS COMPANY
A DIVISION OF UNION CARBIDE AND CARBON CORPORATION
UCC
POST OFFICE BOX P
OAK RIDGE, TENNESSEE

[redacted]

[redacted]

[redacted]

ORNL 1543

[redacted]

Contract No. W-7405-eng-26

4A

CHEMICAL TECHNOLOGY DIVISION

Unit Operations Section

APPLICATION OF THE PULSE COLUMN FOR URANIUM RECOVERY FROM K-25 WASTES

E. Lieberman

A. C. Jealous

DATE ISSUED

NOV 6 1953

OAK RIDGE NATIONAL LABORATORY
Operated By
CARBIDE AND CARBON CHEMICALS COMPANY
A Division of Union Carbide and Carbon Corporation
Post Office Box P
Oak Ridge, Tennessee

MARTIN MARIETTA ENERGY SYSTEMS LIBRARIES

3 4456 0349509 1

[redacted]

[redacted]

INTERNAL DISTRIBUTION

1. C. E. Center
2. Biology Library
3. Health Physics Library
4-5. Central Research Library
6. Reactor Experimental Engineering Library
7-11. Laboratory Records Department
12. Laboratory Records, ORNL R.C.
13. C. E. Larson
14. W. H. Humes (K-25)
15. L. B. Emlet (Y-12)
16. A. M. Weinberg
17. E. H. Taylor
18. E. D. Shipley
19-20. F. L. Culler
21. F. C. Vondy Lage
22. R. C. Briant
23. J. A. Swartout
24. C. P. Keim
25. J. H. Frye, Jr.
26. S. C. Lind
27. A. H. Snell
28. A. Hollaender
29. M. T. Kelley
30. K. Z. Morgan
31. T. A. Lincoln
32. R. S. Livingston
33. A. S. Householder
34. C. S. Harrill
35. C. E. Winters
36. D. W. Cardwell
37. E. A. King
38. W. K. Eister
39. F. R. Bruce
40. W. B. Lanham
41. H. K. Jackson
42. H. L. Goeller
43. J. A. Lane
44. D. D. Cowen
45. E. Lieberman
46. A. C. Jealous
47. T. Shapiro (K-25)
48. D. E. Hatch (K-25)

EXTERNAL DISTRIBUTION

49. American Cyanamid Company
50-51. Argonne National Laboratory
52. Armed Forces Special Weapons Project, Washington
53-54. Atomic Energy Commission, Washington
55. Battelle Memorial Institute
56. Bureau of Mines, Salt Lake City
57-58. Carbide and Carbon Chemicals Company (C-31 Plant)
59-61. Carbide and Carbon Chemicals Company (K-25 Plant)
62-64. Carbide and Carbon Chemicals Company (Y-12 Plant)
65. Chicago Patent Group
66. Cleveland Area Office
67-69. Division of Raw Materials, Washington
70. Dow Chemical Company, Pittsburgh
71. Dow Chemical Company (Rocky Flats)
72-75. duPont Company, Augusta
76-77. General Electric Company, Richland
78-79. Goodyear Atomic Corporation
80. Iowa State College
81-82. Mallinckrodt Chemical Works
83-85. National Lead Company of Ohio
86. New Brunswick Laboratory
87-90. New York Operations Office
91. Patent Branch, Washington
92. Rohm and Haas Company
93-107. Technical Information Service, Oak Ridge

[redacted]

[redacted]

CONTENTS

		Page
0.0	ABSTRACT	1
1.0	INTRODUCTION	2
2.0	SUMMARY	3
3.0	EXTRACTION COLUMN STUDIES	4
	3.1 Flooding Studies	4
	3.2 Uranium Extraction Studies	7
4.0	STRIPPING COLUMN STUDIES	9
	4.1 Flooding Studies	9
	4.2 Uranium Stripping Studies	9
5.0	BIBLIOGRAPHY	11
6.0	APPENDIX	13
	6.1 Equipment	13
	6.11 Pulse Generators	13
	6.12 Process Solution Feed Mechanisms	16
	6.2 Chemical Process Flowsheet	16
	6.3 Process Solution Specific Gravities	16
	6.4 Solvent Recovery	16
	6.41 Carbonate System	19
	6.42 Calcium Hydroxide Slurry Contactor	19
	6.5 Tabulated Data	19

[redacted] [redacted]

Page

TABLES

3.1 Extraction Column Flooding Studies. 5

3.2 Extraction Column Studies 8

4.1 Stripping Column Flooding Studies 10

4.2 Stripping Column Studies. 12

6.1 Specific Gravities of Process Solutions 18

6.2 Extraction Column Flooding Data 21

6.3 Stripping Column Flooding Data. 22

FIGURES

3.1 Extraction Column Flooding Rate vs. Frequency 6

6.1 Experimental Pulse Column Installation for Cascade Operation Including a Concatenated Pulse Column 14

6.2 Bellows Pulse Generator 15

6.3 Flowsheet for Recovery of Uranium from K-25 Wastes. . . 17

6.4 $Ca(OH)_2$ Solvent Clean-Up Contactor. 20

[redacted]

0.0 ABSTRACT

The flow capacity and column height requirements for pulse column solvent extraction contactors were determined for recovering uranium from various K-25 waste solutions at a solution processing rate of approximately 30 gal/hr.

[redacted]

1.0 INTRODUCTION

An experimental study was carried out to define the flow capacity and column height requirements for pulse column solvent extraction contactors for the recovery of uranium from certain K-25 waste solutions. These solutions contain uranium of varying isotopic enrichment and it was desired to return this uranium to the K-25 cascade to reduce the inventory holdup outside the cascade. The solution processing rate specified by K-25 was approximately 30 gal/hr, with a loss of less than 1 ppm of uranium to each of the aqueous waste streams from the solvent extraction operation. For flexibility of operation and to maintain identity of feed solutions, K-25 later proposed to install parallel trains of columns, thus making the capacity requirement for each train approximately 15 gal/hr.

The scope of this study was to determine: (1) the maximum flow capacity as a function of pulse frequency from 40 to 70 cycles/min and pulse amplitudes of 0.7 and 1.0 in. in an extraction-scrub column of two different total lengths, 24 and 28 ft; and (2) the uranium recovery as a function of pulse frequencies of 50 and 60 cycles/min, extraction heights of 16 and 18 ft, scrub heights of 8 and 10 ft, strip height of 18 ft, and flow rates equivalent to 60% of the flooding point.*

The solvent extraction work was done in 1.920 in. i.d. pulse columns (see Figure 6.1) incorporating 23% free area stainless steel plates which (a) were 0.031 in. thick, (b) had 0.125 in. holes, and (c) were spaced 2 in. apart in the column. The extraction-scrub column tests were carried out in a vertical glass-pipe column. The column was arranged for compound operation with the uranium solution feed point in the central part of the column so that the lower part of the column was the extraction section and the upper part the scrub section for removing impurities which tended to go with the uranium in the organic phase. In order to minimize the effects of solvent degradation, stripping must be done immediately following extraction; hence, a concatenated pulse column consisting of three 6-ft sections linked in series to provide 18 ft of contacting length was utilized for the stripping tests because of lack of a second vertical pulse column in which to carry out cascade-flow operations. The three sections are joined by pairs of transfer lines in each of which is a 0.5 in. floating-disc check valve. The check valves open and close with the pulse cycle and limit the flow to one direction for each tube, the organic stream (light phase) flowing in one transfer line with each pressure stroke and the aqueous stream in the other with each suction stroke. Enlarged chambers are incorporated at the end of each section to provide ample settling time for disengagement of organic and aqueous phases.

*HTU determinations were not made because equilibrium data were not available.

Allowing nitric acid, which comes along with the uranium from the extraction column, to remain in the solvent increased the rate of solvent degradation, and resulted in the formation of uranium complexes with the degradation products, monobutyl phosphate (MBP), which tends to form a complex insoluble in both phases, and dibutyl phosphate (DBP), which forms a solvent-soluble complex that is hard to strip[1]. The solvent degradation products can interfere with normal pulse column operation by causing: (1) emulsification which lowers the flow capacity, and (2) high uranium losses.

The study was carried out using one standard flowsheet specifying a feed and product concentration of 25 grams of uranium per liter. The flowsheet, which was supplied by the Chemical Development Section, incorporated: (1) a solvent mixture of 15% tributyl phosphate and 85% Amsco 125-90W hydrocarbon diluent, and (2) feed/solvent/scrub flow ratios of 8/5/2 in the extraction column, and solvent/strip flow ratios of 5/8 in the strip column. To facilitate the use of one single extractant (15% TBP) and one set of flow ratios, the standard flowsheet specified a uranium concentration of 25 g/liter, an HNO_3 concentration of 3.0 N, and an aluminum concentration of 0.2 M. Each feed batch was prepared and adjusted at K-25 to satisfy the flowsheet feed specifications. Each batch was handled separately according to its source, namely: (1) equipment decontamination solution, (2) laboratory waste solution, and (3) lime cake leach solution, which originates from miscellaneous clean-up operations.

Before adjustment at K-25 for the solvent extraction step, the solutions vary in concentration of uranium, acid, and impurities such as iron, fluoride, nickel, aluminum, calcium, sulfates, phosphate, and copper. Specific, detailed analyses of the feed solutions are unavailable, since the concentration of impurities is dependent on the origin of the material.

2.0 SUMMARY

A 3 in. D extraction pulse column with 18 ft of extraction section, topped with a 7 ft scrub section and a 3 in. D strip pulse column of 18 ft are recommended for greater than 99.99% uranium recovery from K-25 equipment decontamination, lime cake leach, and laboratory waste solutions. These lengths plus two 1.5-ft end pieces per column will fit into the 28 ft of useable head room indicated by K-25 to be available for the installation. Columns of these dimensions will result in less than 1 ppm of uranium in each of the process waste streams, and will provide the specified capacity of approximately 15 gal of feed per hour per train at 60% of flooding.

The data on which the above recommendations are based were obtained in an experimental pulse column system incorporating a vertical pulse column and a concatenated pulse column in series. The extraction column, incorporating an 18 ft long by 1.920 in. D extraction section topped with a 10 ft scrub section, accommodated a feed rate of approximately 8 gal/hr, leaving less than 1 ppm of uranium in the aqueous raffinate. These values were for operation at 60% of flooding, with pulse amplitude of 1.0 in. and pulse frequency of 60 cycles/min.

Batch countercurrent studies carried out by the Chemical Development Section showed that four scrub stages were desirable for adequate decontamination of the uranium from impurities[2]. Previous experience[3] indicated that a scrub stage height of 2.5 ft was reasonable, and thus 10 ft of scrub was provided in the 2-in. column tests. Factors such as the need for containing the aqueous raffinate in critically safe vessels, to be located below the columns, and the need of an 18 ft extraction height made it necessary to limit the scrub height in the K-25 installation to 7 ft. K-25 has indicated that additional decontamination of product will be accomplished in subsequent steps following solvent extraction; therefore a 7-ft scrub section will be satisfactory[4].

In the test program the solvent product from the extraction-scrub column was cascaded directly to the stripping column. Aqueous stripping of the uranium from the solvent in an 18 ft long by 1.920 in. D concatenated column left less than 1 ppm of uranium in the solvent stream going to recycle. Pulse conditions for the strip column were 1.0 in. amplitude and 60 cycles/min.

3.0 EXTRACTION COLUMN STUDIES

3.1 Flooding Studies

The flooding rate of the extraction column for pulse conditions of 1.0 in. amplitude and 50 cycles/min was 1,550 gal/ft^2-hr (see Table 3.1) (corresponding to 16 gal of feed per hour in the 1.920 in. i.d. column) for the equipment decontamination solution feed. This flooding rate was confirmed by dropping to 90% of this rate and continuing operation for two to three hours (minimum of five to seven column changes), during which no tendency to flood was observed. Actually, flooding is intermittent at 1,550 gal/ft^2-hr, and two to three hours is required to flood the column completely at this rate. Increasing the frequency to 60 cycles/min reduced the flooding point to 1,160 gal/ft^2-hr which corresponds to 12 gal/hr in a 1.920 in. i.d. column (see Figure 3.1 for flooding rate vs. frequency). The latter point was confirmed for the other two types of feed solutions.

The initial flooding test in the series was made at 0.7 in. amplitude and frequencies of 40, 50, 60, and 70 cycles/min. At

TABLE 3.1

Extraction Column Flooding Studies
(see Figure 3.1)

Column: Tru-bore Pyrex glass, 1.920 in. i.d.
Plates: Stainless steel, 1/8 in.D perforations, 23% free area, 2 in. spacing
Pulse Generator: Air-driven bellows ("semi-square" wave)
Pulse Amplitude: 1.0 in.[a]
Feed (AF): U, 22 g/liter; 0.2 M $Al(NO_3)_3$; 3.0 N HNO_3
Solvent (AX): 15 vol. % tributyl phosphate--85 vol. % Amsco 125-90W hydrocarbon diluent
Scrub (AS): 3.0 N HNO_3
Flow Ratio: Feed/Solvent/Scrub = 8/5/2

Extraction Height (ft)	Scrub Height (ft)	Pulse Frequency (cycles/min)	Flooding Rate: Total Flow (gal/ft^2-hr)	Flooding Rate: Feed (gal/hr)
Equipment Decontamination Solution				
16	8	50	1,550	16
18	10	60	1,160	12
Laboratory Waste				
18	10	60	1,160	12
Lime Cake Waste				
18	10	60	1,160	12
18[b]	10	50	1,240	12.8

[a] A pulse amplitude of 0.7 in., tried initially, for frequencies of 40, 50, and 60 cycles/min and 860 gal/ft^2-hr throughput provided poor dispersion (i.e., large droplets), but caused flooding at 70 cycles/min; hence, most of the testing incorporated the 1.0 in. amplitude.

[b] Third batch of feed material emulsified to the point that column operation was unstable at 60 cycles/min and flow rates previously demonstrated as operable; hence, the frequency was lowered to 50 cycles/min.

[redacted]

DWG 21317

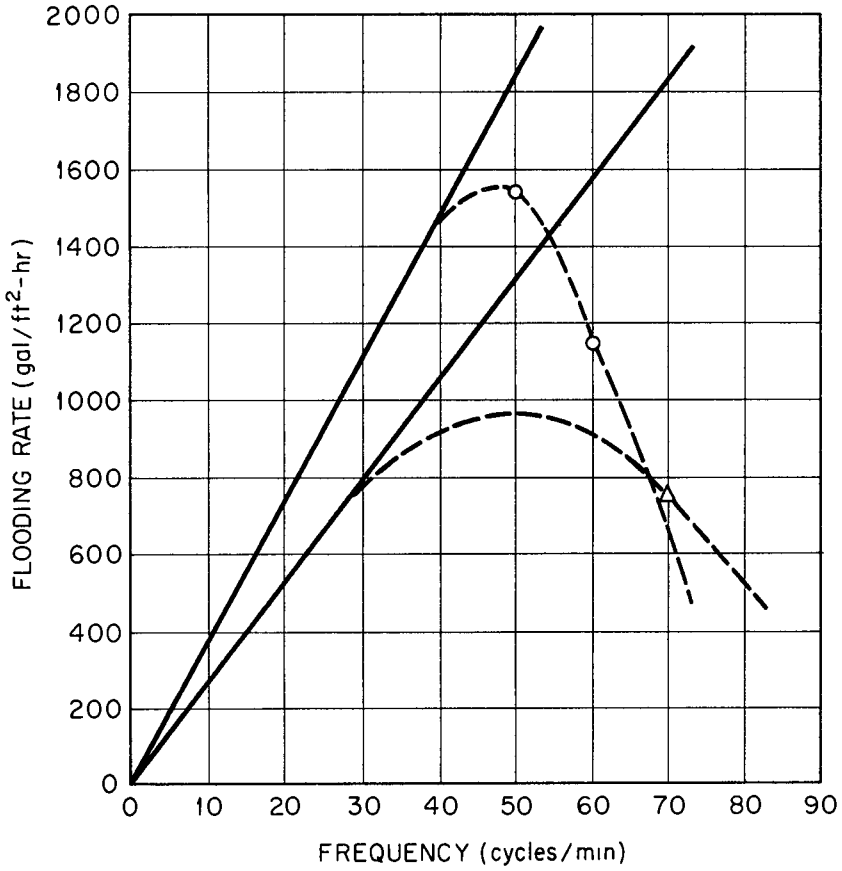

△ 0 7-in AMPLITUDE
○ 1 0-in AMPLITUDE

COLUMN 1 920 in D
EXTRACTION HEIGHT 16 ft FOR △
18 ft FOR ○
SCRUB HEIGHT 8 ft FOR △
10 ft FOR ○

PLATES 2 in APART, 23% FREE SPACE, 1/8-in PERFORATIONS
PULSE GENERATOR AIR-DRIVEN BELLOWS
FLOW RATIO AQ FEED / SCRUB / EXTRACTANT, 8/2/5
CONTINUOUS PHASE AQUEOUS
ROOM TEMPERATURE

Fig 3 1 Extraction Column Flooding Rate vs Frequency

860 gal/ft^2-hr and frequencies of 40 and 50 cycles/min; the dispersion of the organic phase in the aqueous was visibly poor (i.e., large droplets). Increasing the frequency to 60 cycles/min resulted in fair dispersion. However, when the frequency was increased to 70 cycles/min, flooding occurred in a matter of minutes. The amplitude was changed to 1.0 in. and the 50 and 60 cycles/min frequencies were reinvestigated. The dispersion was immediately improved, and the remainder of the study was made with a 1.0 in. amplitude.

However, for one batch (the third of three) of feed originating from lime cake leach solution, emulsification occurred at 60 cycles/min and caused the column to flood; hence, the frequency was dropped to 50 cycles/min for this particular test batch and a flooding point of 1,240 gal/ft^2-hr (12.8 gal feed per hour) was established. A check of settling times for this material indicated a 50 to 100% increase in settling time over that for the other two test batches of feed from lime cake leach solution, thus indicating the presence of some nonrepresentative, surface-active contaminant in this third batch.

3.2 Uranium Extraction Studies

Uranium losses were less than 1 ppm for the equipment decontamination and laboratory waste solutions, and 3.0 to 6.0 ppm for the lime cake leach solution for pulse column tests in which the extraction and scrub heights were 18 ft and 10 ft, respectively (see Figure 6.1 for Pulse Column Flowsheet). The throughput was 8.0 gal of feed/hr (representing 60% of flooding) at a frequency of 60 cycles/min and an amplitude of 1.0 in. (see Table 3.2).

Batch countercurrent tests made by the Chemical Development Section in establishing a standard flowsheet for all three types of feed material had indicated that six stages were required to reduce the uranium concentration in the waste stream to less than 1 ppm. Assuming a 2.5 ft stage height, based on past experience with various uranium systems[5,6], the 24-ft test column was initially arranged to provide a 16 ft extraction section and an 8 ft scrub section for the program.

The operating conditions used in the tests of uranium recovery were selected from the flooding data such that the discontinuous phase was dispersed into a mass of fine droplets and the throughput was about 60% of flooding rate. The initial test with the column assembled as above, and using feed prepared by K-25 from equipment decontamination solution, was made with a pulse frequency of 50 cycles/min, and a feed rate of 9.5 gal/hr. The uranium loss in this test was about 2 ppm. The extraction height was then increased to 18 ft and a second test showed uranium losses of 13 ppm. This high loss was attributed to an off-specification feed, the acidity of which

TABLE 3.2

Extraction Column Studies
(See Figure 6.1 for Experimental Pulse Column System)

Column: Tru-bore Pyrex glass, 1.920 in. i.d.
Plates: Stainless steel, 1/8 in. D perforations, 23% free area, 2 in. spacing
Pulse Generator: Air-driven bellows ("semi-square" wave)
Pulse Amplitude: 1.0 in.
Throughput: At 60% of flooding rate
Feed (AF): U, 22 g/liter; 0.2 M $Al(NO_3)_3$; 3.0 N HNO_3
Solvent (AX): 15 vol. % tributyl phosphate--85 vol. % Amsco 125-90W hydrocarbon diluent
Scrub (AS): 3.0 N HNO_3
Flow Ratio: Feed/Solvent/Scrub = 8/5/2

Extraction Height (ft)	Scrub Height (ft)	Pulse Frequency (cycles/min)	Feed Throughput (gal/hr)	U Conc. in Waste (ppm)
Equipment Decontamination Solution				
16	8	50	9.5	1.95
18	10	50	9.5	13.0(a)
18	10	60	8.0	0.4
Laboratory Waste				
18	10	60	8.0	0.1(b)
18	10	60	8.0	0.2
Lime Cake Waste				
18	10	60	8.0	3.0
18	10	60	8.0	2000-3000(c)
18	10	50	8.0	6.0

(a) Acidity of feed 2.35 N instead of 3.0 N.

(b) The uranium concentration of the waste was 0.1 ppm for the first 4 hr of the test, but it increased to 1000 ppm after 8 hr.

(c) No satisfactory explanation for this high value can be given.

was 2.35 N instead of 3.0 N as called for in the flowsheet. Nevertheless, for the next test, the pulse frequency was increased to 60 cycles/min and the feed rate was lowered from 9.5 to 8.0 gal/hr in order to maintain the testing at 60% of flooding.

In the first test using laboratory waste solution as feed, the uranium concentration of the extraction waste was 0.1 ppm for the first 4 hrs of an 8-hr test, but it showed an increase in the 5-hr sample and rose to 1 g/liter in the 8-hr sample. Column operation was normal, and detailed investigation failed to disclose the reason for the high uranium concentrations of the waste.

In the second test, employing lime cake leach solution, there were excessive uranium losses, the uranium concentration in the extraction column waste continuously increasing until it was approximately 5 g/liter for the sixth hour. Batch countercurrent studies did not explain the reason for the high uranium losses. One subsequent column test yielded losses of 6 ppm. Incidentally, the impurities in the lime cake leach solution color the solution so that it is impossible to judge the column extraction performance visually.

4.0 STRIPPING COLUMN STUDIES

4.1 Flooding Studies

In an initial test the flooding rate in the 1.920 in. i.d., 18-ft concatenated pulse column (see Figure 6.1) was 1,350 gal/ft^2-hr (combined flow) for a frequency of 50 cycles/min and an amplitude of 1.0 in. Increasing the frequency to 60 cycles/min reduced the flooding rate to 1,140 gal/ft^2-hr. These flooding rates proved to be independent of the source of the extract (see Table 4.1).

4.2 Uranium Stripping Studies

Two initial tests in an 18-ft concatenated column at a feed rate of 6 gal/hr (60% of flooding), with a pulse of 50 cycles/min frequency and 1.0 in. amplitude, gave uranium losses of 3 to 4 ppm in the waste organic stream. For all subsequent tests the frequency was increased to 60 cycles/min and the feed rate was lowered to 5 gal/hr (60% of flooding); such conditions gave uranium losses of less than 0.5 ppm for all solutions fed to the strip column regardless of the origin of the feed to the extraction columns. In a third stripping test of the extract from lime cake leach material, the uranium loss was 8 ppm, but this high loss was due to a portion of the feed material being held approximately two days from a previous extraction test, during which time the

TABLE 4.1

Stripping Column Flooding Studies

(see Figure 6.1)

Column: Concatenated pulse column, Tru-bore Pyrex glass pipe 1.920 in. i.d., three 6-ft sections providing 18 ft of stripping height

Plates: Stainless steel, 1/8 in. D perforations, 23% free area, 2 in. spacing, 0.031 in. thick

Pulse Generator: Milton Roy piston pulser (sine wave)

Pulse Amplitude: 1.0 in.

Feed Composition (AP, or BF): U, 35 g/liter; 0.15 N HNO_3

Stripping Solution (BX): Demineralized water

Flow Ratio: Feed/Strip = 5/8

Pulse Frequency (cycles/min)	Flooding Rate	
	Total Flow (gal/ft^2-hr)	Feed (gal/hr)
Equipment Decontamination Solution		
50	1,350	10
60	1,140	8.5
Laboratory Waste and Lime Cake Solutions		
60	1,140	8.5

uranium formed complexes with MBP and DBP. In the second stripping test on the extract from lime cake leach material, samples were taken at the top of the second section of the concatenated column (equivalent to a 12-ft stripping height); the uranium loss in the strip column solvent raffinate at this point was 0.5 ppm as compared with 0.15 ppm in the raffinate after 18 ft of stripping (see Table 4.2).

5.0 BIBLIOGRAPHY

(1) HW-19959, "The Hydrolysis Products of TBP and their Effect on the TBP Process for Uranium Recovery", R. M. Wagner, April 15, 1951.

(2) Personal communication, R. H. Rainey, January, 1953.

(3) ORNL-1045, "Purex Pilot Plant Quarterly Report for February, March, and April, 1951", H. K. Jackson, July 24, 1951.

(4) Personal communication, T. Shapiro, February, 1953.

(5) ORNL-663, "Chemical Technology Division Progress Report for Quarter Ending February 28, 1950".

(6) ORNL-1207, "Purex Pilot Plant Quarterly Report for August, September, and October, 1951", D. O. Darby, March 17, 1952.

(7) HW-28616, "Progress Report, Chemical Development Unit, Separations Technology Sub Section", F. W. Woodfield, June 30, 1953.

(8) ORNL-1519, "ORNL Purex Pilot Plant Terminal Report", D. O. Darby (to be issued).

(9) ORNL-1560, "Thorex Solvent Recovery Contactor Development", A. C. Jealous, P. A. Haas (to be issued).

(10) ORNL, CF #53-10-47, "Application of the Pulse Column for Uranium Recovery from K-25 Wastes", E. Lieberman, A. C. Jealous, October 7, 1953.

TABLE 4.2

Stripping Column Studies
(see Figure 6.1)

Column: Concatenated pulse column, Tru-bore Pyrex glass pipe, 1.920 in.i.d., three 6-ft sections providing 18 ft of stripping height
Plates: Stainless steel, 1/8 in. D perforations, 23% free area, 2 in. spacing, 0.031 in. thick
Pulse Generator: Milton Roy piston pulser (sine wave)
Pulse Amplitude: 1.0 in.
Throughput: At 60% of flooding rate
Feed Composition (AP, or BF): U, 35 g/liter; 0.15 N HNO_3
Stripping Solution (BX): Demineralized water
Flow Ratio: Feed/strip = 5/8

Pulse Frequency (cycles/min)	Total Flow Rate (gal/ft^2-hr)	Feed Rate (gal/hr)	U Conc. in Waste (ppm)
Equipment Decontamination Solution			
50	800	6	4.
50	800	6	3.
60	670	5	0.05
Laboratory Waste			
60	670	5	0.1
60	670	5	0.03
Lime Cake Waste			
60	670	5	0.2
60	670	5	0.1[a]
60	670	5	8.[b]

[a] Organic samples at the 12 ft point (top of the middle section) showed 0.5 ppm U.

[b] Organic feed (AP) contained 38% 2-day old organic feed (AP), probably containing a relatively high concentration of TBP degradation products.

6.0 APPENDIX

6.1 Equipment (see Figure 6.1 for Pulse Column Flowsheet)

6.11 Pulse Generators

The pulse generator for the extraction-scrub column was an air-driven bellows, and that for the strip column was a Milton Roy piston pump.

Air-Driven Bellows: The pulse-generating mechanism for the A Column was a stainless steel 5 in. D Fulton Sylphon bellows actuated by air pressure (see Figure 6.2). This pressure is exerted against the outer surface of the bellows, compressing it, and thus producing an up-pulse in the column. When air is released from the bellows housing, the hydrostatic head of the liquid in the column causes the down-pulse action. The air inlet and exhaust from the bellows housing was controlled by a solenoid valve. Timing of this solenoid valve is accomplished with a Flexopulser timer. The pressure differential, or driving potential, which causes the organic phase to pass through the pulse plates is the difference between the air pressure on the bellows and the hydrostatic pressure. In these tests a difference of 5 to 6 psi was used in order that optimum dispersion of the discontinuous phase might be obtained. Pressure differences outside this range gave too weak a pulse. Besides the pressure differential, the physical characteristics of the system, such as the interfacial tension and the differences in the specific gravity, also affect the dispersion.

The results of development work carried out at Hanford[7] indicate that a Teflon bellows will provide a long life and is suitable for use in a pulser assembly. Use of the pneumatic bellows pulser permits varying the wave shape from a sine to a "semi-square", i.e., a pulse cycle that embraces a fast or sharp up-pulse and a slow down-pulse. The latter enhances the coalescence of the dispersed phase under each plate between strokes, and thus new droplet formation on the succeeding up-pulse. This increases the column efficiency because new interfaces are continually being formed.

Piston Pump: A Milton Roy piston pump (Model #TMD-1-51-148 SML), minus the step valve head, was used as the pulser for the B Column. This unit, provided with a variable speed motor (frequency 33 to 140 cycles/min) and variable stroke length (0 to 4 in.) for modifying the pulse frequency and amplitude, produces a sine wave.

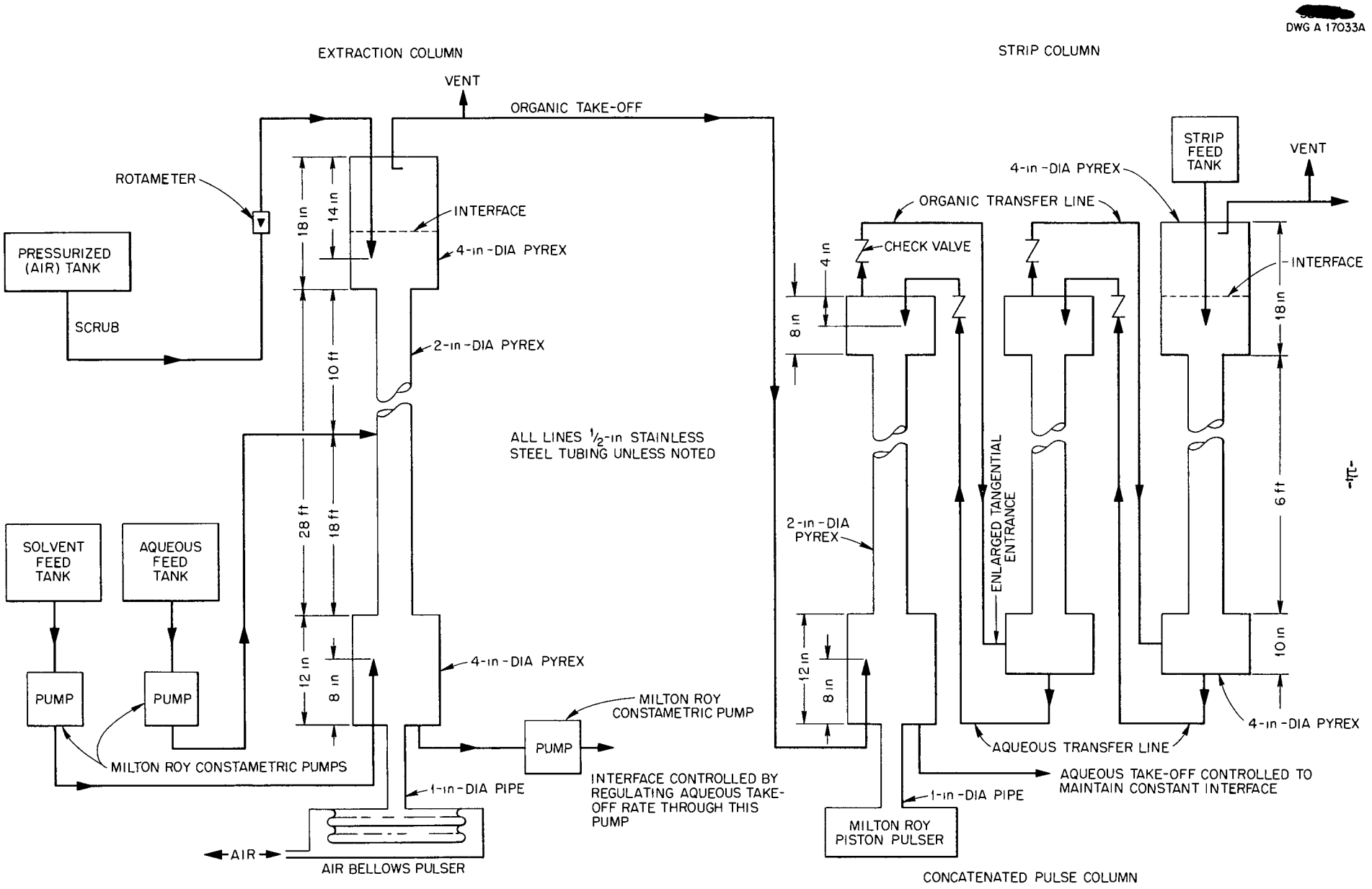

Fig 6 1 Experimental Pulse Column Installation for Cascade Operation Including a Concatenated Pulse Column

[redacted]
DWG 21318

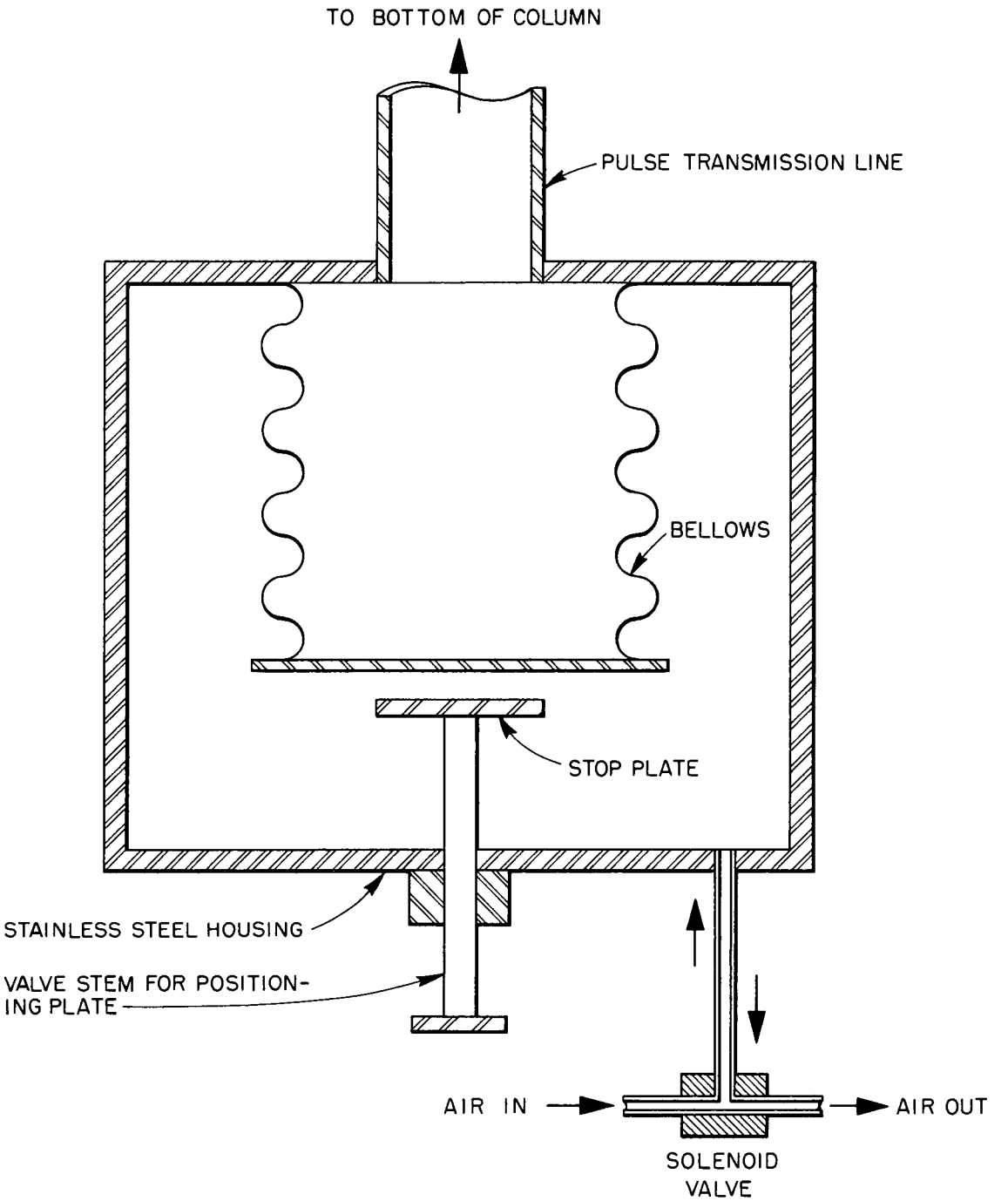

Fig. 6 2 Bellows Pulse Generator

6.12 Process Solution Feed Mechanisms

Milton Roy Constametric pumps (Model #Tcp-45-77-SM) were used to deliver solvent and aqueous feed, and a pressurized tank was used to deliver scrub solution to the A Column. All process solutions were delivered to the B Column by gravity flow; Rotameters were used to indicate the flow rates.

6.2 Chemical Process Flowsheet

A solvent extraction flowsheet (see Figure 6.3) was devised by the Chemical Development Section which is identical for the three waste solutions studied. The prepared aqueous feed solution in all cases had a concentration of approximately 25 g/liter, an aluminum concentration of 0.2 M, and an acid concentration of 3.0 N. The solvent (extractant) was 15% tributyl phosphate (TBP) in Amsco 125-90W, a refined kerosene diluent. The scrub was an aqueous nitric acid solution, with an acidity of 3.0 N. The feed/solvent/scrub ratios in the extraction-scrub column (the A Column) were 8/5/2. The A Column product/strip ratio in the stripping (the B Column) was 5/8.

Batch countercurrent studies of the extraction operation indicated that at least six extraction stages are required to give a waste stream (AW) uranium concentration below 1.0 ppm, which represents a uranium recovery of greater than 99.99%. A minimum of two scrub stages was needed to remove contaminating substances, e.g., sodium, from the organic product stream. In batch countercurrent studies of the strip operation, five batch countercurrent stages reduced the uranium concentration of the organic waste stream (BW) to 6.0 ppm.

6.3 Process Solution Specific Gravities

The specific gravities of samples of all of the flowing streams are recorded in Table 6.1.

6.4 Solvent Recovery

The tributyl phosphate in the solvent slowly undergoes hydrolysis, forming monobutyl phosphate and dibutyl phosphate, and the presence of uranium in the solvent increases the rate of hydrolysis. The mono- and dibutyl phosphates are detrimental because: (1) they form uranium complexes that are difficult to strip or extract, and (2) being surface active they will, if present in sufficient quantities, cause emulsification and subsequent flooding. These products can be removed from the used solvent before it is recycled. There are two systems for recovery of TBP solvent mixtures.

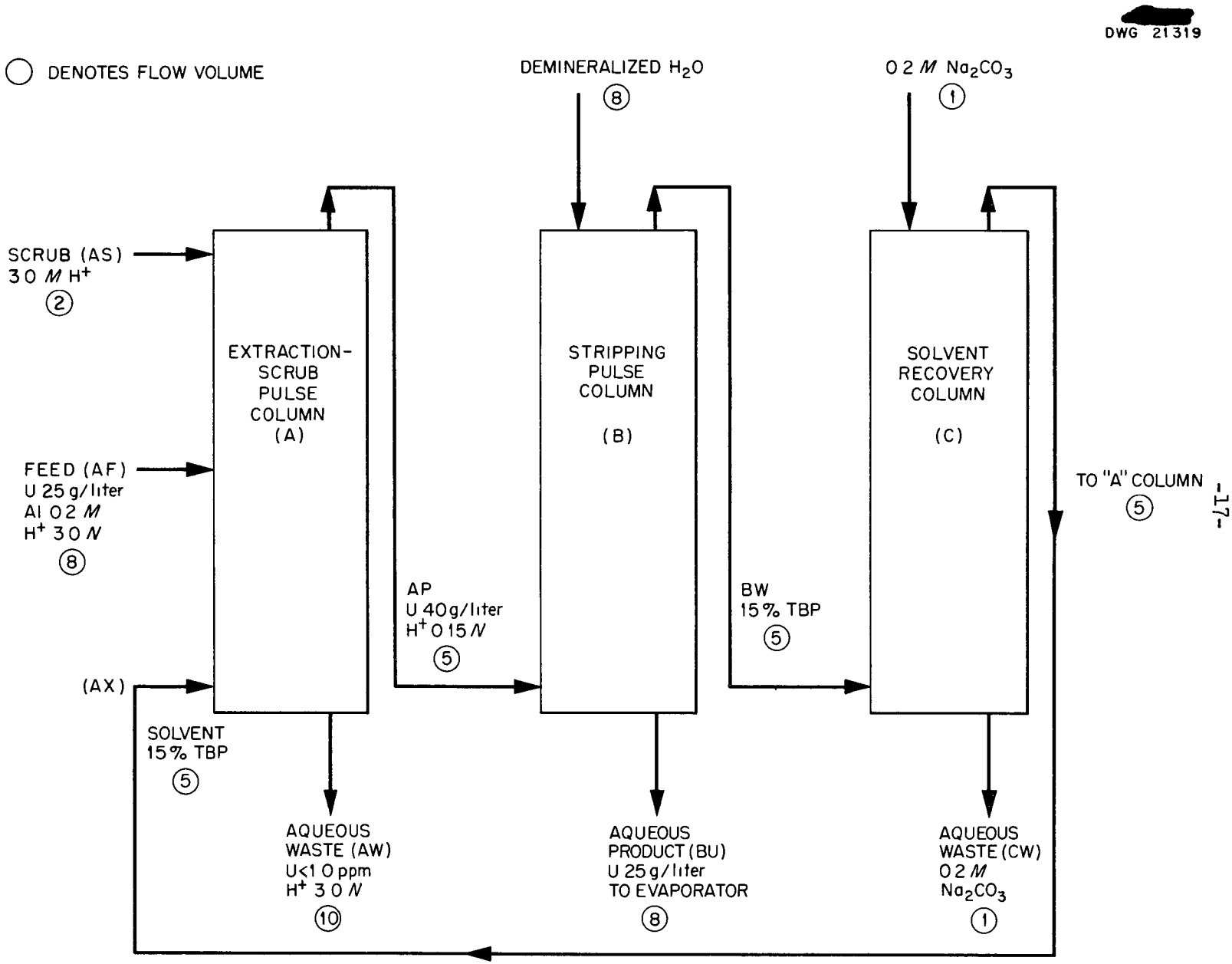

Fig 6 3 Flowsheet for Recovery of Uranium from K-25 Wastes

TABLE 6.1

Specific Gravities of Process Solutions

Solution	Equipment Decontamination	Laboratory Waste	Lime Cake Waste
Feed (AP)	1.207	1.180	1.351
A Column Product (AP)	0.840	0.844	0.839
A Column Waste (AW)	1.161	1.130	1.288
Organic (extractant)	0.782	0.782	0.782
Scrub	1.100	1.100	1.100
B Column Product (BP)	1.035	1.035	1.034
Strip	1.00	1.00	1.00
B Column Waste (BW)	0.782	0.782	0.782

6.41 Carbonate System

A carbonate recovery system has proved satisfactory in the Oak Ridge National Laboratory Purex pilot plant program[8]. It is reliable and is continuous in operation, and it may be entirely suitable for a K-25 uranium recovery plant. The organic waste stream is passed countercurrent to 0.2 M Na_2CO_3 in a pulse column 18 ft high and containing 23% free area plates on a 2 in. spacing. The organic/aqueous flow ratio used can be varied but is generally 5/1. The sodium salts of mono- and dibutyl phosphate are formed, and since these salts favor the aqueous phase they leave in the wash column aqueous waste stream. The uranium forms aqueous-soluble complexes with the carbonate ion and also leaves in the waste stream. If the uranium concentration of the B Column waste is high, as a result of solvent being recycled without treatment, the concentration in the solvent recovery column aqueous stream will be high (approximately five times as great). However, this can be combined with the equipment decontamination solution and so recovered.

6.42 Calcium Hydroxide Slurry Contactor

This process was developed by the Chemical Development Section, Chemical Technology Division, for the Thorex Process and was used by the Unit Operations Section[9] to clean up the TBP solvent mixtures in both the Thorex and the K-25 studies. The process was devised to reduce the volume of solvent recovery wastes and to effect better radioactive decontamination of the solvent. The solvent recovery contactor used by Unit Operations (see Figure 6.4) was designed to handle 18 liters of solvent per hour. The solvent is contacted with calcium hydroxide slurry [1.8 kg of $Ca(OH)_2$ in 5 liters of water] for 1 hr and then is passed through a stainless steel star filter or centrifuge to remove any entrained particles of calcium hydroxide. The monobutyl phosphate, dibutyl phosphate, and "crud" either are adsorbed or they react chemically with the calcium hydroxide. The charge is good for at least 45 hrs of operation, which is equivalent to about 800 liters of solvent in other processes.

6.5 Tabulated Data

The flooding data obtained in the various runs are given in Tables 6.2 and 6.3. Complete chemical data are given in ORNL, CF #53-10-47[10].

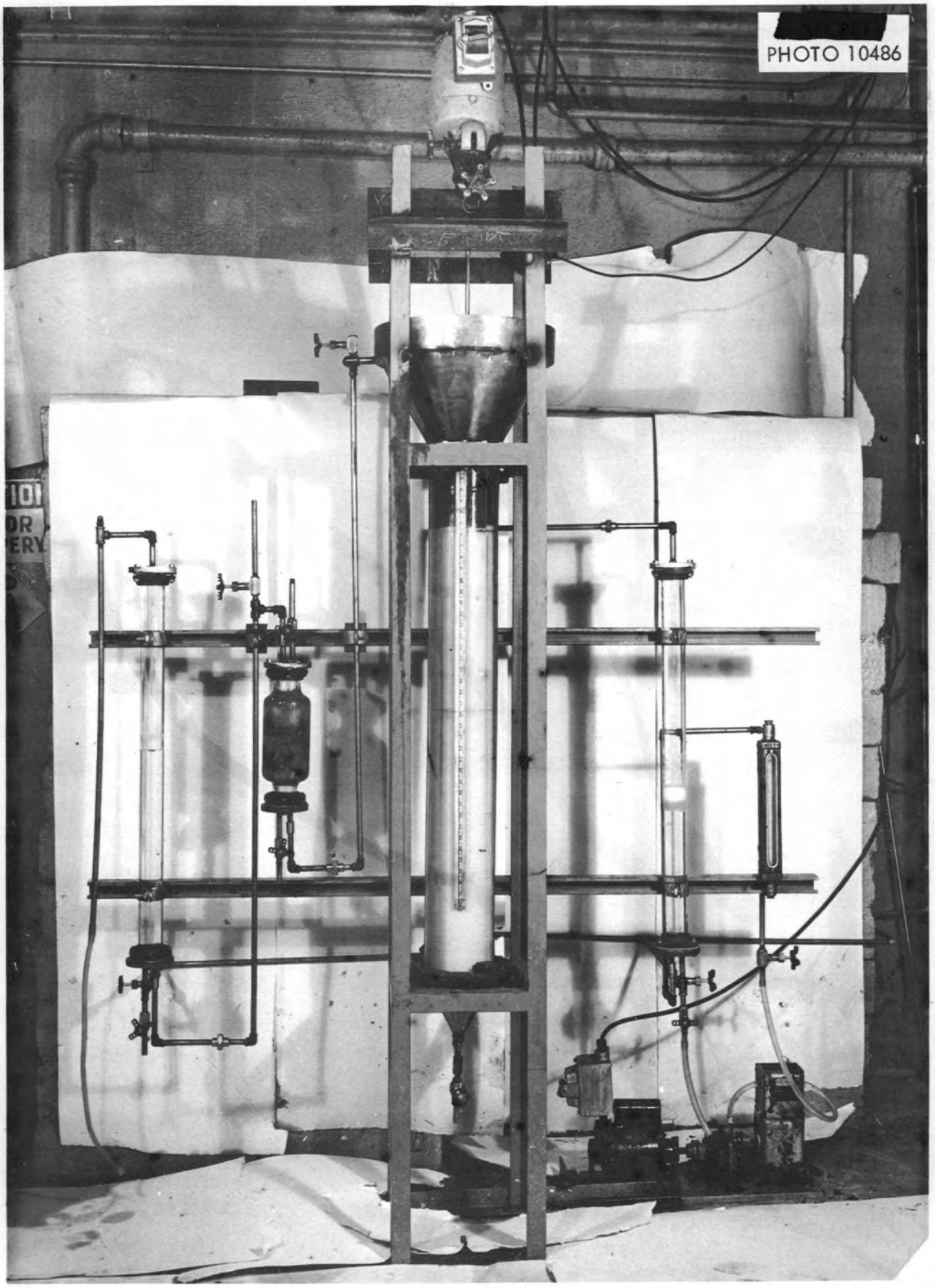

Fig. 6.4. $Ca(OH)_2$ Solvent Clean-up Contactor.

TABLE 6.2

Extraction Column Flooding Data

Column: Tru-bore Pyrex glass, 1.920 in. i.d.
Plates: Stainless steel, 1/8 in. D perforations, 23% free area, 2 in. spacing, 0.031 in. thick
Pulse Generator: Air-driven bellows ("semi-square" wave)
Pulse Amplitude: 1.0 in.[a]
Feed (AF): U, 22 g/liter; 0.2 M $Al(NO_3)_3$; 3.0 N HNO_3
Solvent (AX): 15 vol. % tributyl phosphate--85 vol. % Amsco 125-90W hydrocarbon diluent
Scrub (AS): 3.0 N HNO_3
Flow Ratio: Feed/Solvent/Scrub = 8/5/2

Extraction Height (ft)	Scrub Height (ft)	Frequency (cycles/min)	Amplitude (in.)	Total Flow Rate (gal/ft^2-hr)	Time (min)	Comments
16	8	40	0.7	495	30	Operable; poor dispersion; large organic droplets.
16	8	40	0.7	1,000	30	Same
16	8	40	0.7	1,490	30	Same
16	8	40	0.7	1,695	25	Same; limit of pumps.
16	8	50	0.7	1,695	--	Flooded in 20 min.
16	8	60	0.7	860	30	Operable; fair dispersion.
16	8	70	0.7	860	--	Flooded in 10 min.
18	10	40	1.375	1,240	--	Flooded in 10 min.
18	10	50	1.0	1,240	120	Operable; good dispersion.
18	10	50	1.0	1,550	--	Intermittent flooding.
18	10	60	1.0	775	120	Satisfactory operation.
18	10	60	1.0	1,070	30	Borderline of flooding.
18	10	60	1.0	1,150	--	Flooded in 15 min.
18	10	60	1.0	1,005	120	Operation satisfactory.

[a] A pulse amplitude of 0.7 in., tried initially, for frequencies of 40, 50, and 60 cycles/min and 860 gal/ft^2-hr throughput provided poor dispersion (i.e., large droplets), but caused flooding at 70 cycles/min; hence, most of the testing incorporated the 1.0 in. amplitude.

TABLE 6.3

Stripping Column Flooding Data

Column: Concatenated pulse column, Tru-bore Pyrex glass pipe 1.920 in. i.d., three 6-ft sections providing 18 ft of stripping height
Plates: Stainless steel, 1/8 in. D perforations, 23% free area, 2 in. spacing, 0.031 in. thick
Pulse Generator: Milton Roy piston pulser (sine wave)
Pulse Amplitude: 1.0 in.
Feed Composition (AP, or BF): U, 35 g/liter; 0.15 N HNO_3
Stripping Solution (BX): Demineralized water
Feed Ratio: Feed/Strip = 5/8

Frequency (cycles/min)	Total Flow Rate (gal/ft^2-hr)	Time (min)	Comments
50	800	30	Excellent dispersion; satisfactory operation.
50	1,350	--	Flooding in 25 min.
50	1,120	70	Satisfactory operation.
60	670	240	Satisfactory operation.
60	800	30	Satisfactory operation.
60	1,065	20	Satisfactory operation.
60	1,140	--	Flooded in 15 min.
60	915	90	Satisfactory operation.