SECRET
SECURITY INFORMATION

CENTRAL RESEARCH LIBRARY
DOCUMENT COLLECTION

MARTIN MARIETTA ENERGY SYSTEMS LIBRARIES
3 4456 0349556 3

ORNL 1530
Special

1154

UNCLASSIFIED
CLASSIFICATION CHANGED TO:
BY AUTHORITY OF: AEC 12-2-60
BY: R. O. Williams 6-13-61

AEC RESEARCH AND DEVELOPMENT REPORT

LABORATORY RECORDS
1954

THE STABILITY OF SEVERAL INCONEL-UF_4 FUSED SALT FUEL SYSTEMS UNDER PROTON BOMBARDMENT

W. J. Sturm
R. J. Jones
M. J. Feldman

CENTRAL RESEARCH LIBRARY
DOCUMENT COLLECTION
LIBRARY LOAN COPY
DO NOT TRANSFER TO ANOTHER PERSON
If you wish someone else to see this document, send in name with document and the library will arrange a loan.

OAK RIDGE NATIONAL LABORATORY
OPERATED BY
CARBIDE AND CARBON CHEMICALS COMPANY
A DIVISION OF UNION CARBIDE AND CARBON CORPORATION
UCC
POST OFFICE BOX P
OAK RIDGE, TENNESSEE

RESTRICTED DATA
This document contains Restricted Data as defined in the Atomic Energy Act of 1946. Its transmittal or the disclosure of its contents in any manner to an unauthorized person is prohibited.
SECRET
SECURITY INFORMATION

[redacted]

ORNL-1530

This document consists of 32 pages.
Copy 115 of 271 copies. Series A.

Contract No. W-7405-eng-26

SOLID STATE DIVISION

THE STABILITY OF SEVERAL INCONEL-UF_4 FUSED SALT FUEL SYSTEMS UNDER PROTON BOMBARDMENT

W. J. Sturm
R. J. Jones
M. J. Feldman

DATE ISSUED

4 19 1953

OAK RIDGE NATIONAL LABORATORY
Operated by
CARBIDE AND CARBON CHEMICALS COMPANY
A Division of Union Carbide and Carbon Corporation
Post Office Box P
Oak Ridge, Tennessee

[redacted]

MARTIN MARIETTA ENERGY SYSTEMS LIBRARIES
3 4456 0349556 3

[redacted]

ORNL-1530
Special

INTERNAL DISTRIBUTION

1. G. M. Adamson
2. R. G. Affel
3. C. R. Baldock
4. C. J. Barton
5. E. S. Bettis
6. D. S. Billington
7. D. Binder
8. F. F. Blankenship
9. T. H. Blewitt
10. E. P. Blizard
11. E. J. Boyle
12. M. A. Bredig
13. R. C. Briant
14. R. B. Briggs
15. F. R. Bruce
16. A. D. Callihan
17. D. W. Cardwell
18. J. V. Cathcart
19. C. E. Center
20. J. M. Cisar
21. G. H. Clewett
22. C. E. Clifford
23. Anne Cohen
24. W. B. Cottrell
25. D. D. Cowen
26. J. H. Crawford, Jr.
27. F. L. Culler
28. S. E. Dismuke
29. W. K. Eister
30. L. B. Emlet (Y-12)
31. W. K. Ergen
32. M. J. Feldman
33. A. P. Fraas
34. W. R. Gall
35. C. B. Graham
36. R. J. Gray
37. W. W. Grigorieff (consultant)
38. W. R. Grimes
39. A. Hollaender
40. D. K. Holmes
41. A. S. Householder
42. J. T. Howe
43. W. B. Humes (K-25)
44. L. K. Jetter
45. R. J. Jones
46. G. W. Keilholtz
47. C. P. Keim
48. M. T. Kelley
49. F. Kertesz
50. E. M. King
51. C. E. Larson
52. R. S. Livingston
53. R. N. Lyon
54. W. D. Manly
55. L. A. Mann
56. W. B. McDonald
57. J. L. Meem
58. A. J. Miller
59. J. G. Morgan
60. K. Z. Morgan
61. E. J. Murphy
62. C. M. Nelson
63. W. W. Parkinson, Jr.
64. H. F. Poppendiek
65. P. M. Reyling
66. M. T. Robinson
67. H. W. Savage
68. E. D. Shipley
69. O. Sisman
70. L. P. Smith (consultant)
71. A. H. Snell
72. R. W. Stoughton
73. W. J. Sturm
74. C. D. Susano
75. J. A. Swartout
76. E. H. Taylor
77. J. B. Trice
78. F. C. Uffelman
79. E. R. VanArtsdalen
80. F. C. VonderLage
81. J. M. Warde
82. A. M. Weinberg

[redacted]

[redacted]

83. J. C. White
84. E. P. Wigner (consultant)
85. H. B. Willard
86. G. C. Williams
87. J. C. Wilson
88. C. E. Winters
89. M. C. Wittels
90-99. ANP Library
100. Biology Library
101-106. Central Files
107. Health Physics Library
108. Metallurgy Library
109. Reactor Experimental Engineering Library
110-114. Technical Information Department (Y-12)
115-116. Central Research Library

EXTERNAL DISTRIBUTION

117-119. Air Force Engineering Office, Oak Ridge
120-130. Argonne National Laboratory (1 copy to Kermit Anderson)
131. Armed Forces Special Weapons Project (Sandia)
132-139. Atomic Energy Commission, Washington
140. Battelle Memorial Institute
141-145. Brookhaven National Laboratory
146. Bureau of Aeronautics (Grant)
147. Bureau of Ships
148-149. California Research and Development Company
150. Chicago Patent Group
151. Chief of Naval Research
152-156. duPont Company
157-178. General Electric Company, ANPP
179-182. General Electric Company, Richland
183. Hanford Operations Office
184. USAF-Headquarters, Office of Assistant for Atomic Energy
185-192. Idaho Operations Office (1 copy to Phillips Petroleum Co.)
193. Iowa State College
194-201. Knolls Atomic Power Laboratory
202-203. Lockland Area Office
204-207. Los Alamos Scientific Laboratory
208. Massachusetts Institute of Technology (Kaufmann for Benedict)
209. Massachusetts Institute of Technology (Kaufmann)
210-212. Mound Laboratory
213-216. National Advisory Committee for Aeronautics, Cleveland (3 copies to A. Silverstein)
217. National Advisory Committee for Aeronautics, Washington
218-219. New York Operations Office
220-226. North American Aviation, Inc. (1 copy each: H. Pearlman, A. Epp, W. Goeddell, A. Andrew, F. Filmore)
227. Nuclear Development Associates (NDA)
228. Patent Branch, Washington

[redacted]

[redacted]

229-230. Rand Corporation (1 copy to V. G. Henning)
231. Savannah River Operations Office, Augusta
232. Savannah River Operations Office, Wilmington
233-234. University of California Radiation Laboratory
235. Vitro Corporation of America
236-239. Westinghouse Electric Corporation
240-256. Wright Air Development Center
2 copies to B. Beaman
1 copy to Col. P. L. Hill
1 copy to Lt. Col. M. J. Nielsen
2 copies to Consolidated Vultee Aircraft Corporation
1 copy to Pratt and Whitney Aircraft Division
1 copy to Boeing Airplane Company
1 copy to K. Campbell, Wright Aeronautical Corporation
257-271. Technical Information Service, Oak Ridge, Tennessee

[redacted]

ABSTRACT

A series of four, uranium-fluoride-bearing, fused-salt mixtures proposed as fluid fuel for an aircraft reactor has been bombarded with 20- to 22-Mev protons. Inconel, usually specified as structural metal in these systems, was used to contain the mixtures during irradiation. Proton bombardment was employed to augment existing pile experiments because of the high specific energy dissipation attainable by this means. All bombardments were made at 815°C, and varied in integrated energy input from 50 to 165,000 watt-hours. Specific power dissipation, limited by the thermal conductivity of the fuels, varied from 50 to 4700 watts/cm^3. In all fuels, there was evidence of radiation-induced corrosion at power densities greater than 3000 watts/cm^3. Some indication of possible radiation decomposition of the fuels at high dissipation rates was also found.

I. INTRODUCTION

The object of this program has been to bombard a simulated reactor fuel element with a current of 20- to 22-Mev protons in the 86-in. ORNL cyclotron at a specified temperature and with a known proton flux, so as to duplicate, as nearly as possible, the temperature and specific energy dissipation of a proposed aircraft reactor. The stability of the system was determined by metallurgical investigation of the Inconel metal and by chemical analysis of the uranium-containing fuel mixture. Corrosion and grain studies comprised the major part of the metallographic analysis; quantitative determination of dissolved Inconel metal components and a fluoride stability test, which was an assay of uranium to fluorine ratio, made up the chemical analysis.

Four mixtures of metal fluorides under study as fuel substances for the aircraft reactor were bombarded in Inconel containers. Various proportions of the fluorides of sodium, potassium, lithium, and zirconium, in combination with uranium fluoride, formed the low-melting mixtures. The melting points of the mixtures varied from 450 to 540°C; the thermal conductivity varied from 0.53 to about 2.0 Btu/hr·ft^2(°F/ft). The nominal power production requirements in the fuels were taken to be 140 watts/cm^3 for a low-power experimental reactor and 4000 watts/cm^3 for an aircraft reactor. The operating temperature was taken to be 815°C.

Power densities of the above magnitude were well in excess of those attainable by a pile irradiation in any chain reactor available for this experiment early in 1951, when the study began. Because the high flux of short-range energetic particles available in a cyclotron was able to produce a considerably increased energy-dissipation density, this method was chosen for the initial experiments. A concurrent program in the Berkeley 60-in. cyclotron[1] employed deuterons for the same purpose.

With the startup of the MTR, a high-flux reactor became available for this type of experiment and a similar program[2] was more recently initiated to carry on this work. Power

---

(1) W. V. Goeddel, Cyclotron Irradiation of Fused Fluorides in Inconel at Elevated Temperatures, NAA-SR-208 (Jan. 26, 1953).

(2) G. W. Kielholtz et al., Solid State Quar. Prog. Rep. May 10, 1952, ORNL-1301 p. 23; J. G. Morgan et al., Solid State Quar. Prog. Rep. Nov. 10, 1952, ORNL-1429, p. 15.

densities as high as 4000 watts/cm^3 have been attained in fuels having relatively high uranium concentration by using this test reactor and enriched fuels. Since this energy dissipation approaches that attainable in cyclotron experiments, and will probably later exceed it, and since the radiation field is exactly that of interest – fission fragments, neutrons and gamma rays, rather than elementary charged particles – emphasis has now shifted to these experiments.

The cyclotron measurements to be discussed were carried out during the past two years and have involved proton bombardments exclusively. Although the manner in which radiation effects were produced here differed somewhat from that in the proposed reactors, it was not expected that a consequent significant qualitative difference would be encountered. Inside the bombarded fused salt, ionization densities, whether produced by protons or fission fragments, were approximately equal, and fuel stability therefore should be similarly affected. Variation in the number and distribution of knock-on atoms should produce no significant difference in the salt itself, and probably only second-order effects at the Inconel-fuel interface.

II. APPARATUS

All bombardments were carried out in the 86-in. proton cyclotron[3] located in the Y-12 area. This instrument is a fixed-frequency accelerator which provides a high current of protons of energy up to 22 Mev. Since the cyclotron is not equipped to deliver an external beam, it was necessary to accomplish all cooling, shielding, and temperature and beam measurements on the bombarded target while it was between the magnetic pole faces and the dees of the cyclotron.

A specially designed dolly (Fig. 1) was constructed for these bombardments. The dolly was provided with a vacuum-sealed cooling-water circuit and five sealed electrical leads, of which four were used for two independent thermocouple channels and the fifth was used to measure the proton-beam current. The target, mounted on the movable dolly stem, was raised and lowered by means of an external mechanical system through the vacuum lock of the cyclotron to a position between the dees. An external scale on the dolly measured the target position and assured reproducible target placement.

---

[3] R. S. Livingston and A. L. Boch, Oak Ridge 86-Inch Cyclotron, ORNL-1196 (June 12, 1952).

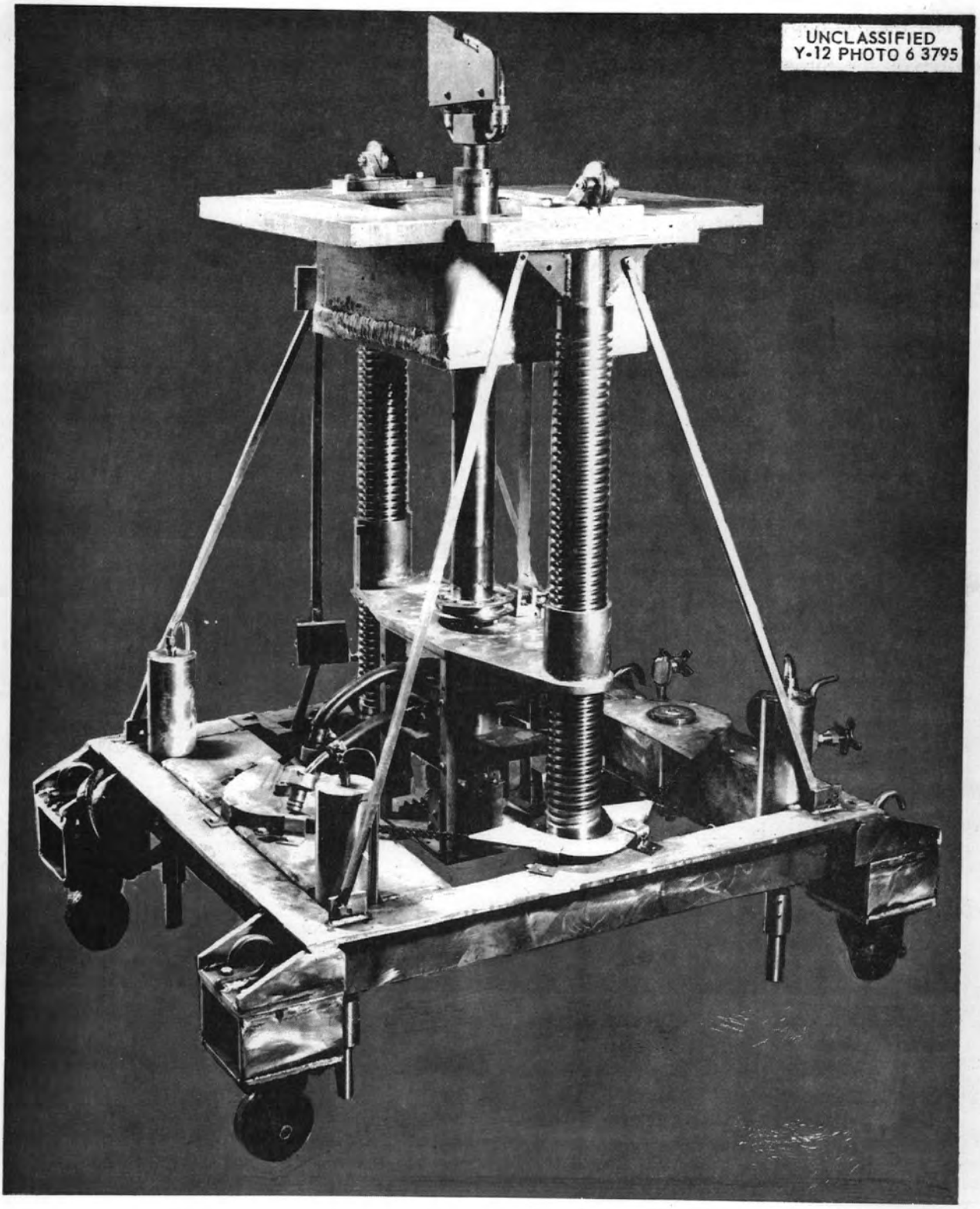

Fig. 1. Cyclotron Target Dolly.

The thermocouple circuits provided for continuous recording of the temperature at two positions on the target during the bombardment; continuous recording was made on two Brown Electronik strip-chart recorders located about 200 ft from the target at the cyclotron control console.

The fuel-container targets (Fig. 2) were mounted on the dolly stem by brazing them onto the copper tubing used for the cooling-water channel (Fig. 3). Double graphite plates, mounted in front of the target as shown in Fig. 4, served to define the portion of the target to be bombarded.

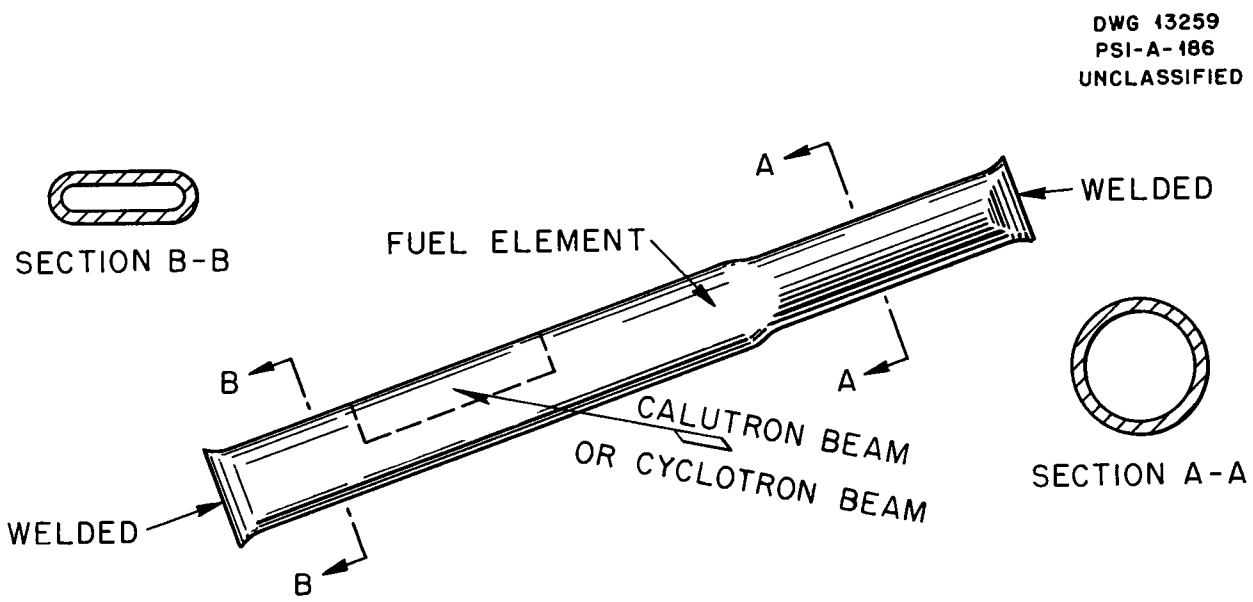

Fig. 2. Diagram of the Eutectic-Filled Inconel Target.

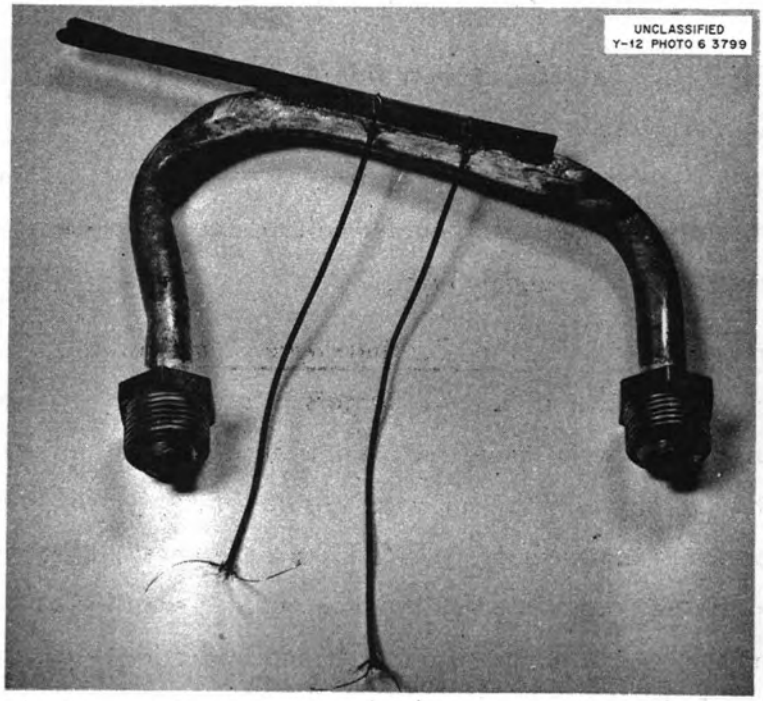

Fig. 3. The Target Brazed on Copper Cooling Line.

Fig. 4. The Target with an Early Form of Carbon Shielding in Place.

III. CALIBRATION OF APPARATUS

A. DETERMINATION OF PROTON BEAM ENERGY INPUT

Two techniques were used to measure the total amount of power which was delivered to the target by the proton beam. The specific energy dissipation was determined by combining the results of the measurement of the bombarded volume of uranium-bearing fuel in the target with the measurement of proton-beam current.

Proton-Beam Current as Determined by Cooling-Water Temperature

Because bombardment of the fuel-pin targets raised the temperature of the target to values which would otherwise be excessive, it was necessary to cool the targets by brazing them to a copper tube through which cool water was continuously circulated. At the temperatures of this experiment (approximately 815°C), all the energy of the proton beam – with the negligible exception of that used to produce nuclear reaction and chemical or solid-state changes, and that which is dissipated by thermal radiation – appeared in the cooling-water stream. Therefore a simple measure of entrance- and exit-water temperatures, combined with the water-flow rate, was used to yield the desired information directly. However, because the apparatus used for cooling the cyclotron target is extensive and not particularly isolated thermally, a calibration of the actual system was thought to be desirable. For this calibration, measured quantities of heat were introduced by means of electric heating elements into the thermally insulated, water-cooled target mount. From the known power input, measured water-flow rates, and temperature change, a constant of correlation between the factors was evaluated. This correlation was used for the determination of most of the energy-input measurements reported in this series.

Microammeter Beam-Current Measurement

A second beam-current measurement, more commonly used, involved the insertion of a microammeter between the target and ground potentials, and consequent direct determination of the proton-beam current. For routine low-flux bombardments, this method was not useful because the target was customarily connected to ground through a thermocouple circuit and because secondary and thermal electron emission from the target tended to obscure the electrical effects of the proton current. Additionally, the effect of "walking electrons," the electrons produced at the source or accelerating slit and conscribed by the electric and magnetic field to follow a rather intricate stepwise path from the source region to the target,

further reduced the proton signal. As a consequence, no current was detectable on the target microammeter for low values of proton beam.

However, in order to compare the power as measured by water temperature methods with that measured by the more direct electrical method, a special target housing was devised. This housing (Fig. 5) consisted of an outer graphite box which was at ground potential. A diagonal slot, at front and rear, parallel to the target, permitted passage of the proton beam to the target. The two inner graphite sheets were mounted at right angles to the axis of the target and were connected electrically to the target and insulated from ground.

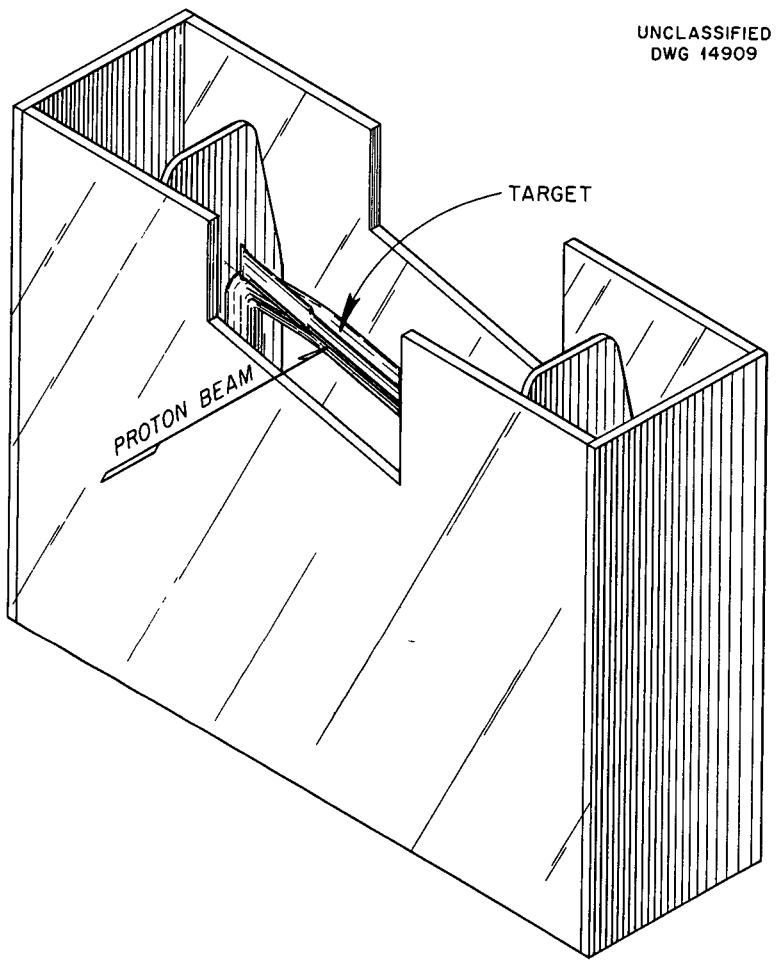

Fig. 5. Special Graphite Housing for Beam-Current Measurement.

During proton bombardment, the outer housing acted to shield the components at target potential from the effects of the "walking electrons," of which the major component of the oscillations was in the direction of the magnetic field, or the axis of the target. The inner graphite members served to collect the secondary and thermal electrons emitted at the target, which also followed the magnetic field direction. Thus the net electrical effect of the proton bombardment was read on the target microammeter.

A stainless steel plate mounted in this housing and on the water-cooled backing was then bombarded with 22-Mev protons. Energy inputs to the target were calculated from measurements of water flow rate and temperature change and compared with those read on the target microammeter. Agreement between the two methods over a wide range of proton-beam currents was always within 6% and was considered adequate for these experiments.

B. MEASUREMENT OF TARGET TEMPERATURE

Since, in the fuel-element bombardments, it was necessary to duplicate the thermal conditions of the proposed reactor, measurement of target temperature was an essential part of the experiment. Thermocouples suggest themselves as the obvious solution for instantaneous determinations and recording in the remote application required here. Because of the unusual application of the thermocouple, in this case, in a 9000 gauss magnetic field with a superimposed oscillating (13.4 megacycle) 340,000-volt electric field, it was felt that a test of the validity of the readings was required. A method was devised[4] to test the accuracy under the conditions of this experiment, that is, under proton bombardment and in the electric and magnetic fields. From 300 to 900°C, it was found that readings were accurate within the limits of the 30-gage wire as specified by the manufacturer. This precision was considered adequate for the measurements.

Two thermocouples were mounted by welding them on the bombarded Inconel face of the target and in such a manner as to divide the irradiated region into three equal parts. By this technique, it was possible to note minor variations in the axial proton distribution and, by changing the cyclotron parameters, to render the distribution uniform for the actual bombardment.

Each thermocouple circuit was interlocked with the cyclotron dee voltage supply in such a manner that the proton beam was automatically shut off when the target temperature

---

[4] W. J. Sturm and R. J. Jones, Behavior of a Chromel Alumel Thermocouple in the Internal Proton Beam of a Cyclotron, ORNL-1540 (to be published).

exceeded 840°C. With this element in the circuit, it was possible to irradiate a single target continuously for as long as four days without it being destroyed by overheating.

C. PROTON-BEAM UNIFORMITY

The target fuel element (Fig. 2), the flattened portion of a salt-filled 1/4-in.-OD Inconel tube with 0.010-in. walls, was made to dimensions which would just stop all protons in the fuel mixture. This bombarded portion of the tube, about 0.075-in. thick, was to be provided with proton energy at the rate of about 4000 to 5000 watts/cm^3 in order to duplicate the energy dissipation of the proposed reactor. Although in actual practice it was not possible to attain this energy density in all targets, it was necessary in all cases to use the most uniform proton beam possible to get maximum power input without exceeding 815°C at any part of the tube. In order to determine the spatial beam distribution, several techniques of measurement were employed.

Geiger Counting of a Segmented Target

A foil of metallic copper, placed in the position of the reactor element target, was bombarded with protons until the induced activity was up to levels adequate for counting. The copper foil, cut into small measured sections, was thus measured and provided a plot of beam intensity as a function of position at the target. Although otherwise satisfactory, this method was slow and, consequently, used infrequently.

Radioautographs of Target Foils

Aluminum metal foils, bombarded and placed in contact with a photographic emulsion, provided a simpler and faster technique for obtaining the same information than the copper provided. The negatives were examined visually as a rough measure of beam intensity and were scanned by a recording densitometer when more precise results were required.

Multiple Target Thermocouples

Because the cyclotron equipment used for these experiments provided a method for mounting two thermocouples on the fuel-pin targets, it was possible to use these thermocouples to give a rough indication of spatial beam homogeneity. By mounting the couples at various separations and adjusting the cyclotron parameters to yield the same temperature reading at both thermocouples, a fair approximation of optimum conditions could be obtained.

With the use of these beam-measuring techniques, it was possible to study the nature of the cyclotron beam as a function of dee-to-dee voltage and of magnetic field strength,

and to measure quantitatively the deflection of the beam as a function of the strength of the magnetic field. By experiments of this type, it was possible to determine the variation of power input with beam shape and to evaulate an optimum set of cyclotron field and source parameters for the bombardment of these targets.

D. CAPACITY OF THE COOLING SYSTEM

A preliminary study of radiation and water target cooling was made by using a proton calutron to simulate the conditions of the actual cyclotron bombardment.

Radiation-Cooled Targets

In order to estimate the energy which can be dissipated from the target by thermal radiation alone, a typical fuel-element target was mounted in the proton calutron. Thermocouples were welded to the leading edge of the bombarded face, and a beam of 12.5-kev protons was allowed to impinge on this edge. By varying the beam current, the power was made to range from zero to about 40 watts. The equilibrium temperature of the target as measured in the bombarded area is plotted in Fig. 6 as a function of proton-beam power. From this, it was estimated that about 20 watts of beam current would maintain the front

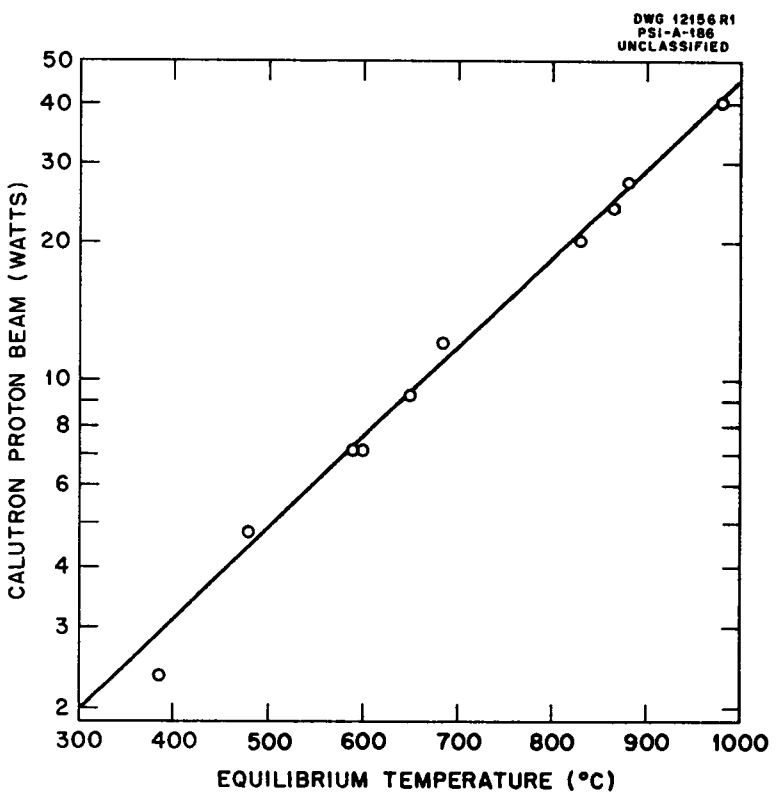

Fig. 6. Equilibrium Target Temperature as a Function of Calutron Beam Current.

face of the target at 815°C. This corresponded to about 1 μa of 20-Mev protons and a power density in the fuel of little more than 100 watts/cm^3. Although several early bombardments were radiation cooled, this power density was too far from the desired 4000 watts/cm^3 to be useful.

Water-Cooled Targets

It was obviously necessary to use a more effective cooling system in order to increase the energy which could be dissipated in the target without a temperature of 815°C being exceeded. Identical calutron experiments were run in which a stainless steel plate was substituted for the fuel-element target and was irradiated with various proton fluxes; the equilibrium temperature of the steel plate was recorded as a function of beam power input. Several independent determinations showed that under the existing conditions about 1200 watts of proton energy could be dissipated in the water stream and that the equilibrium target temperature could be held at 815°C; this would correspond to about 11,000 watts/cm^3 in a typical fuel target. However, as will be discussed below, this was not the limiting factor in the energy input capacity. The maximum energy dissipated did not depend critically upon the thickness of the stainless steel targets; 3/16- to 1/8-in. blocks yielded the same value of power input within the limits of error of the measurements.

Limitations of Power Input

Although the techniques described permitted power dissipation densities which reach the required 4000 to 5000 watts/cm^3, the effective limitation on the power input was the thermal conductivity of the fuel mixture itself. This low conductivity, the value of which is given as 0.53 Btu/ft^2·hr(°F/ft) for one salt mixture, indicates that the fuel is about as effective a thermal insulator as rock wool. Calculations based on this value showed that, under the conditions of the measurement, little more than 350 watts could be conducted through the fuel. Within the accuracy of the calculation and the measurement, the results of this series of bombardments seemed to be consistent with this conclusion; the maximum power dissipated in any target of this type was about 415 watts.

E. THE TARGET AND SPECIFIC POWER INPUT

One of the major problems was the prevention of accidental local overheating and consequent melting of the Inconel tube container used as the target. Two of the provisions made for minimizing this difficulty were the application of multiple thermocouple monitors to the target and the interlocking circuitry discussed earlier. Aside from personal error on the part of the cyclotron operator, all danger of target destruction arose from the possibility

of proton-beam inhomogeneity. Variations of a factor of 50 or more in 1 in. of the beam have been observed, and several steps have been taken to minimize this source of trouble.

In addition to the preliminary survey of beam pattern as a function of magnetic field strength, dee-to-dee voltage, and radius, it was considered judicious to bombard only a small (5/8 in.) face of the fuel pin and to monitor this small region by means of two thermocouples. Although these steps provided fair assurance that the beam pattern across this small region was uniform, they did not eliminate the possibility that a "hot spot" lay just outside. Since the limitation on the irradiated region was effected by placing a graphite slab with this aperture in front of the target, a proton "hot spot" on the graphite plate could develop an incandescent region on the plate. Experience has shown that the incandescent region could radiate sufficient heat to locally melt the Inconel tube. Consequently, all except the very early targets were irradiated behind two well-separated graphite shields.

As a result of such strict limitation of beam area and the small penetration of the proton beam, a very small volume of the target, from 0.1 to 0.2 cm^3, was irradiated. The total volume of fuel in the target was about 0.7 cm^3. Since the fuel is liquid during irradiation, there is a dilution factor of, very roughly, 5 for all effects determined by chemical analysis.

From the standpoint of the metallographically determined depth of corrosion, however, the more appropriate volume term is based upon the volume actually irradiated. Since the increase of corrosion by radiation is, in the first approximation, a dynamic phenomenon occurring only when and where the radiation appears, the effective volume is that in which the radiation dissipates its energy. This approximation neglects second-order effects such as the effect that altering the chemical composition of the eutectic by radiation will have upon the corrosion rate. Since little quantitative interpretation of the results of chemical analysis is attempted in this paper, the values of specific power dissipation given will be based upon the dynamic volume of the fuel.

F. EFFECT OF THERMAL GRADIENT ACROSS BOMBARDED FUEL ELEMENT

During the actual proton bombardment, the temperature of the bombarded side of the fuel element target was controlled and was held at 815°C. However, to dissipate the beam energy, it was necessary to mount the target on a water-cooled copper tube. As a consequence, the thermal gradient across the tube was quite steep, the boundary temperatures being 815 and 10°C. Since the uniformly heated, furnace-control samples have no such gradient, it was necessary to eliminate the possibility that any enhancement of the corrosion

rate observed in the bombarded targets arose from a mass transfer, which depends primarily on the thermal gradient.

Several Inconel fuel elements were prepared and mounted on water-cooled copper tubing. In each instance, the whole assembly was inserted in the control furnace, the water stream turned on, and the temperature of the front face of the target raised to 815°C. Under these conditions, the boundary temperatures were 815 and 40°C. Samples treated in this way for up to 8 hr showed no effect of the gradient on corrosion or chemical composition.

IV. EXPERIMENTAL PROCEDURE

Fuel pins were fabricated from circular 0.250-in.-OD Inconel tubing with 0.010-in. walls. After tubes were cut to approximately the proper length, a 1/2-in. section of one end was flattened, and a heliarc bead was welded to render this end vacuum tight. At this point, the tubes were furnace-annealed; then the circular cross section, for about half the length of the tube at the welded end, was partially compressed to form a region of elliptical cross section. The eutectic mixture was next introduced and fused in the compressed end while the container was evacuated. After the circular end was flattened and welded, the specimen was ready for bombardment or heat treatment.

The pin was brazed to the water-cooled mount for irradiation. This mount (Fig. 3) was held at an angle of about 30 deg to the horizontal in order that the melted salt would remain in the lower, flattened region. Double graphite plates shielded the ends and unfilled parts of the tube from the proton beam during the bombardment.

The cyclotron bombardment was manually controlled by the cyclotron operator using the recording thermocouple circuits as an instantaneous monitor of target temperature and varying the beam current to maintain uniform target temperature during the course of the run. Control samples were not irradiated but were given a thermal treatment that duplicated the duration and temperature of the bombarded specimens.

Irradiated and control samples were analyzed identically. The ends of the tubes were cut off, and the eutectic was melted out for chemical analysis. The Inconel tube was cut into 1/4-in. sections, mounted, polished, and etched, and the tube sections were subjected to metallurgical analysis.

V. COMPILATION OF RESULTS

Sixty-five fuel pins were studied in four groups; 36 were bombarded with 20- to 22-Mev protons, and the others were heated in a furnace for varying times and served as control specimens. Results of all the studies made on the samples are tabulated in Tables 1 through 4.

Except for the first several bombardments shown in Table 1, all targets were water-cooled; several early targets were cooled by thermal radiation. The thickness of all targets was such as to just stop the protons, and all eutectic mixtures were bombarded in Inconel tubing with a 10-mil wall thickness. Within each table, samples are grouped in such a manner as to show the data of the bombarded sample put in juxtaposition with that of the appropriate control specimen. Control samples were individually furnace-treated to duplicate the thermal history of the bombarded specimen.

In the tables the power density given, that determined from change in cooling water temperature, refers to the dynamic volume discussed above, and is probably accurate within ± 25%. Trace-element chemical analysis is reported in parts per million, with an accuracy of 20%; the results of the uranium and fluorine assays are given in per cent, and are accurate within 2% for large capsules and within 5% for microcapsules. The only metallurgical datum recorded in the tables is the depth of corrosion observed.

TABLE 1. RESULTS OF CHEMICAL AND METALLURGICAL ANALYSES OF IRRADIATED AND UNIRRADIATED EUTECTIC NO. 2 IN INCONEL AT 815°C.

Composition: NaF 16.1 wt%
KF 12.5 wt%
UF_4 71.4 wt%

Melting point: 530°C

Thermal conductivity: 0.53 Btu/hr·ft^2(°F/ft)

Sample No.	Duration of Irradiation (hr)	Power Density (watts/cm^3)	Fe (ppm)	Ni (ppm)	Cr (ppm)	U (%)	F (%)	Corrosion (in.)
66	1	60	130	20	1510	54.1	28.3	*
67	1	control	110	20	1120	53.4	28.4	*
305	1	400	115	68	1900	53.5	28.3	*
103	1	control	100	15	1240	54.4	28.4	*
306	1	480	240	20	934	51.4	28.2	*
308	1	340	86	80	1900	53.7	28.2	*
484	1	control	110	130	1800	54.2	**	*
311	1	?	115	340	1500	53.5	28.4	0.001
485	1	control	110	130	1800	54.2	28.2	0.001
481	1	440	465	194	540	53.5	**	*
509	1	control	150	120	1550	54.1	28.7	*
865	1	?	240	950	2630	53.5	27.4	0.0005
858	1	?	320	900	2410	53.3	27.2	*
864	1	control	250	340	2600	53.3	28.4	*
483	1	830	165	165	2690	53.4	28.4	0.001
510	1	control	100	15	1460	53.9	28.6	*
862	2	?	350	1000	2200	54.2	27.9	*
863	2	control	260	450	2900	54.7	28.2	*
64	4	60	90	120	1640	54.0	28.3	0.001
63	4	control	125	25	1310	55.0	28.6	0.001
101	4	50	70	50	1440	53.8	28.4	0.001
100	4	control	100	20	1070	54.1	28.5	0.001
868	4	?	160	590	2460	53.1	27.2	*
860	4	850	190	760	2760	53.4	27.0	*
861	4	control	220	580	2500	54.0	28.0	*
859	8	730	150	500	2410	53.6	27.2	*
867	8	control	230	600	2800	53.1	27.9	*

* Less than 0.0005-in. corrosion.
** Insufficient sample for analysis.

TABLE 2. RESULTS OF CHEMICAL AND METALLURGICAL ANALYSES OF IRRADIATED AND UNIRRADIATED EUTECTIC NO. 14 IN INCONEL AT 815°C.

Composition: KF 56.2 wt%
NaF 10.1 wt%
LiF 25.9 wt%
UF_4 7.8 wt%

Melting point: 450°C

Thermal conductivity: 2.0 Btu/hr·ft^2(°F/ft) (preliminary value)

Sample No.	Duration of Irradiation (hr)	Power Density (watts/cm^3)	Fe (ppm)	Ni (ppm)	Cr (ppm)	U (%)	F (%)	Corrosion (in.)
			Macrocapsule					
62	1	200	2800	22400	6300	12***	**	0.0005
55	1	320	170	170	1100	6.35	**	*
60	1	470	230	900	1800	5.97	**	*
56	1	260	1500	4350	3440	10***	**	0.0005
63	1	control	250	260	1800	5.69	42.6	*
59	2	260	230	180	1400	5.69	42.3	*
58	2	control	130	500	2100	6.16	**	*
57	4	200	220	170	1300	5.70	43.0	*
61	4	control	130	140	1800	5.24	41.4	*
			Microcapsule					
104 C	1	1400	660	3300	3600	5.49	**	0.0005
103 C	1	control	220	660	2600	5.70	**	*
100 F	2	1700	280	420	2900	5.33	**	*
101 F	2	control	240	360	2800	5.45	**	*
101 C	3	?	1240	6800	4000	**	**	0.0005
102 C	3	control	550	1500	3400	5.7	**	*
103 F	6	850	330	820	2600	**	**	*
102 F	6	4700	470	580	3200	5.73	**	0.0025
104 F	6	control	150	290	3800	5.18	**	*

* Less than 0.0005-in. corrosion.
** Insufficient sample for analysis.
*** Colorimetric analysis, not comparable with the other analytic results of this series.

TABLE 3. RESULTS OF CHEMICAL AND METALLURGICAL ANALYSES OF IRRADIATED AND UNIRRADIATED EUTECTIC NO. 21 IN INCONEL AT 815°C.

Composition:

NaF	1.8 wt%
KF	25.9 wt%
ZrF_4	61.6 wt%
UF_4	10.7 wt%

Melting point: 540°C

Thermal conductivity: 1.6 Btu/hr·ft^2(°F/ft) (estimated)

Sample No.	Duration of Irradiation (hr)	Power Density (watts/cm^3)	Fe (ppm)	Ni (ppm)	Cr (ppm)	U (%)	F (%)	Corrosion (in.)
910	3	2400	440	410	520	6.45	39.0	*
907	3	control	270	300	1010	6.96	38.4	*
1107	4.5	2300	450	90	590	6.7	37.8	*
1101	4.5	control	110	75	1100	6.5	35.2	*
911	7	4100	510	185	670	5.5	38.1	0.0015
905	7	control	140	29	1100	6.87	38.9	*
1109	8	1150	610	105	670	7.7	36.7	*
1102	8	control	110	25	1090	7.4	34.6	*

* Less than 0.0005-in. corrosion.

TABLE 4. RESULTS OF CHEMICAL AND METALLURGICAL ANALYSES OF IRRADIATED AND UNIRRADIATED EUTECTIC NO. 27 IN INCONEL AT 815°C.

Composition: NaF 16.7 wt%
ZrF_4 72.4 wt%
UF_4 10.9 wt%

Melting point: 510°C

Thermal conductivity: 1.6 Btu/hr·ft^2(°F/ft) (estimated)

Sample No.	Duration of Irradiation (hr)	Power Density (watts/cm^3)	Fe (ppm)	Ni (ppm)	Cr (ppm)	U (%)	F (%)	Corrosion (in.)
1220	5.6	2800	1695	280	1730	7.85	41.7	*
1205	5.6	control	980	40	3000	**	**	*
1214	10.6	2200	1780	55	1730	7.94	40.8	*
1203	10.6	control	**	**	**	**	**	*
1217	14.3	2000	2100	30	1310	7.34	**	*
1204	14.3	control	**	**	**	**	**	*
1215	15.4	2900	1530	65	1640	7.53	41.3	*
1206	15.4	control	460	75	3400	**	**	*
1221	46.4	3300	3500	230	2100	7.28	40.2	0.002
1201	46.4	control	1250	180	2700	**	**	*
1219	92	1700	1950	50	1660	7.70	40.6	*
1202	92	control	**	**	**	**	**	*

* Less than 0.0005-in. corrosion.
** Insufficient sample for analysis.

VI. INTERPRETATION OF RESULTS

In order to be able to report chemical and metallurgical conclusions with some degree of assurance, it was felt that a statistical approach was best suited to eliminate a few of the many variables associated with this problem, and to partially compensate for the necessarily broad tolerance in some experimental aspects of the problem. Consequently, results were taken partly from an analysis of the entire group of samples, with no particular emphasis placed upon the possibly unique behavior of any individual specimen, and partly from a study of the general trend of the results as a function of power density, time, and duration of irradiation. A wide range of specific power inputs (500 to 4700 watt/cm^3), bombardment times (1 to 92 hr), and integrated energy irradiations (50 to 165,000 watts-hr) is represented in the data. Among the individual bombardments are found several which, in integrated power, are closely equivalent to running the aircraft reactor experiment (140 watts/cm^3) for 0.3 to 1200 hours. Other runs approximate the energy dissipation of the aircraft reactor (4000 watts/cm^3) for about 0.01 to 40 hours. Intermediate times and powers are represented, as well, and the combined results yield some indication of radiation-enhanced corrosion rates as a function of proton-power input and time.

It may be well to note that, in general, an energetic charged particle such as a proton, in its traverse of matter, loses energy in the first part of its range by ionization and excitation of the atoms surrounding its path. At a lower energy, near the end of its range, the energy exchange is via the knock-on process in which the atoms of the absorber may be displaced from equilibrium position or lattice sites by the primary particle and by the recoil atoms themselves. Generally, too, the number of secondaries produced by an energetic, light, primary particle is very large. That component of radiation damage determined by displaced atoms and induced lattice irregularities occurs primarily at the end of the proton range; chemical effects are usually brought about primarily by the ionization. However, displacement effects are not expected to be nearly so effective in producing damage in molten salts as they are in solids. No effort has been made here to determine the cause of the effects observed in terms of these variables.

A. METALLURGICAL RESULTS

General intergranular corrosion of the Inconel containers as a function of irradiation and heat treatment is the only metallurgical property that was studied throughout the series.

An evaluation of the amount of corrosion induced by the proton irradiation in the Inconel container was made differentially. A second, otherwise identical, fuel element was subjected to furnace heat treatment which duplicated the thermal history of the cyclotron sample. Since the unirradiated control specimen would thus show all the effects resulting from the thermal component of the irradiation, the net effect evaluated from a study of the irradiated specimen is that of the ionization and knock-ons induced by the bombardment. A set of photomicrographs showing the Inconel wall at the fuel interface in an irradiated and furnace control sample is shown in Fig. 7. In this case, a net effect of about 1.5 mils of radiation-induced corrosion is found. Similar pairs of fuel elements were studied in each reported bombardment.

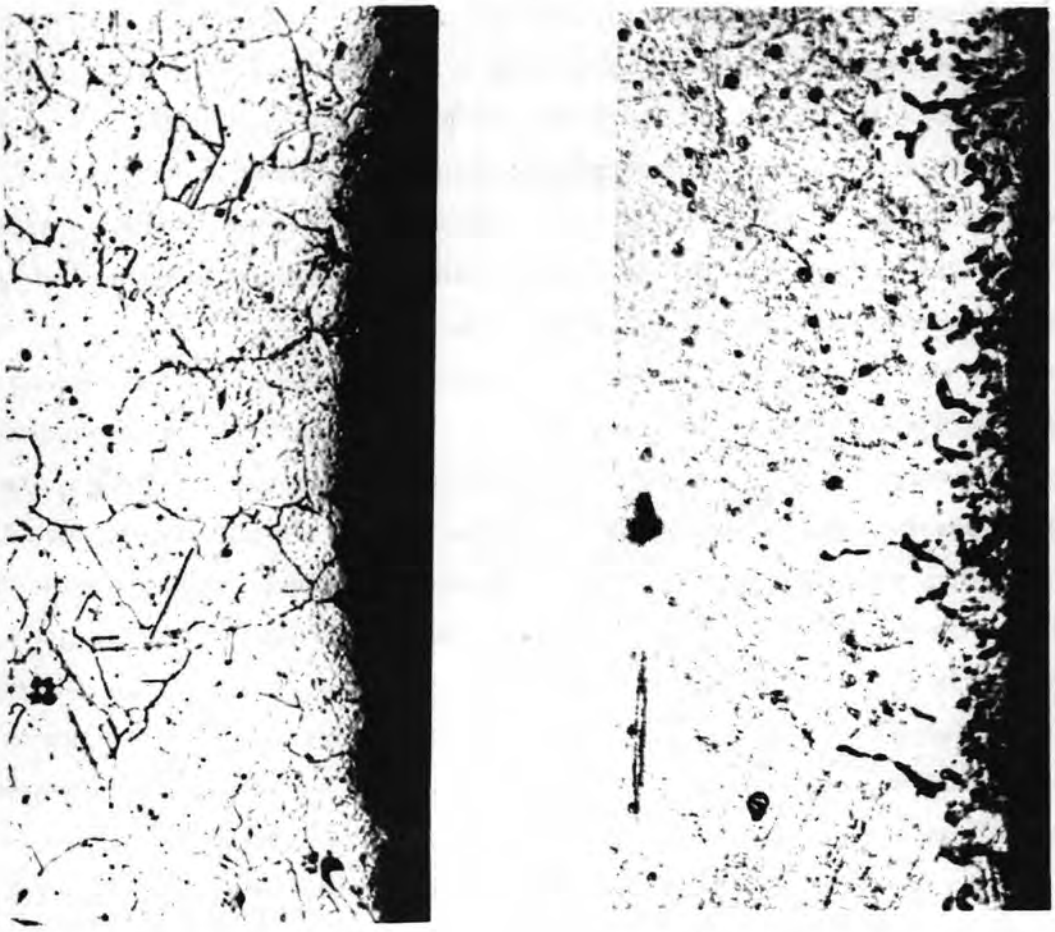

UNIRRADIATED IRRADIATED

Fig. 7. An Example of Radiation Enhanced Corrosion.

The general nature of the grain picture was examined cursorily for evidence of local heating or other strikingly obvious radiation effects, but, except for a few initial samples that were overheated, nothing other than corrosion was found. Thus only the corrosion data are tabulated and are found in the last column in each table. Where corrosion is reported, it represents a significant area so affected, rather than widely scattered, isolated spots. In the case of the irradiated fuel elements, this corrosion was found only in the region actually in the proton beam; in the case of the furnace treated control specimens, to be strictly comparable, the corrosion was sought only in the eutectic filled portion of the tube; other regions were, in general, not attacked. In all cases, the depth, given in thousandths of an inch, represents the penetration of about 80% of the corrosion pits. The remaining pits exceeded this depth, but by only about 10% of the reported penetration.

A brief summary of the conclusions available from these data follows:

Eutectic No. 2 showed generally a fairly large amount of corrosion. However, closer study indicates two other significant features: all corrosion occurred in samples which contained the unstabilized eutectic fuel mixture, and, in a significant fraction of these cases, the furnace-control sample also showed an equivalent amount of corrosion. Thus the conclusion is that the unstabilized eutectic No. 2 is itself fairly corrosive at 815°C and that the additional effect of proton bombardment was such as to increase the corrosion rate by a maximum of about 30% in the unstabilized eutectic. About half the measurements were made on samples of the No. 2 salt mixture which were stabilized, that is, were loaded with small quantities of iron, chromium, and nickel, in an effort to lessen corrosive attack on the Inconel. There is no evidence of radiation-induced corrosion in the stabilized eutectic; however, as will be noted, power densities were never high.

Eutectic No. 14 also showed fairly frequent evidences of radiation corrosion; however, the occurrence, though frequent, was not usually severe at low power densities. At 4700 watts/cm^3 for 6 hr, a significant, 2.5-mil penetration was observed. This was the most severe radiation attack observed on any bombarded fuel element discussed in this report, and combined with the relative high frequency with which incipient radiation corrosion was observed at low power densities, seemed to indicate a tendency to corrosion which was very little smaller than that of unstabilized eutectic No. 2.

Eutectic No. 21, the first of the zirconium fluoride containing fuels, was studied only in the smaller version, the microcapsule. As a consequence, power densities obtained were uniformly higher, and chemical dilution factors were lower. Although but four bombardments

were made, the range and distribution of power densities is sufficient to indicate that this eutectic is significantly less corrosive at low power densities than either fuel discussed above. The only evidence of radiation-induced corrosion appeared in a 7-hr irradiation at 4100 watts/cm^3.

Eutectic No. 27, the second zirconium containing eutectic, was bombarded in a range of power densities which was again higher than that of the first two eutectics, and about the same as that used for eutectic No. 21. The most notable difference was an increase in bombardment time from an average of 5.5 hr in the case of eutectic No. 21 to an average of 31 hr in this fuel. Again, only that target bombarded at the highest rate showed evidence of radiation-induced corrosion. It is interesting to note that, despite its long irradiation at a rather high power level, the target subjected to the 92-hr bombardment showed no evidence of corrosion.

A summary of the results of the bombardments indicates:

1. The eutectic No. 2, unstabilized, is fairly corrosive without bombardment.
2. Radiation somewhat enhances the corrosion rate in the unstabilized eutectic at low (< 1000 watts/cm^3) power densities.
3. The stabilized eutectic No. 2 shows no evidence of radiation corrosion under exposures of up to 8 hr at 700 to 800 watts/cm^3.
4. Like the unstabilized eutectic No. 2, eutectic No. 14 is quite corrosive without bombardment.
5. Enhancement of the corrosion rate in eutectic No. 14 by radiation is observed only at high (4700 watts/cm^3) power levels.
6. From a study of the unirradiated control samples, eutectics Nos. 21 and 27 are notably less corrosive than unstabilized No. 2, and No. 14.
7. Radiation corrosion in both eutectic No. 21 and eutectic No. 27 was not observed at power densities of less than about 3000 watts/cm^3.
8. There is some indication that, in eutectics Nos. 21 and 27, radiation corrosion depends more critically on the power density than upon the duration of bombardment; in fact, it may be that this is true for all four eutectics.

B. CHEMICAL RESULTS

The nature of the chemical analysis of the eutectic fuel was such as to yield two types of information: (1) An assay of the uranium and fluoride content of the fuel mixture was

performed on each specimen in an effort to measure the extent of radiation-induced chemical alteration of the fuel fluorides. A decrease in the fluorine content in the eutectic, for example, might serve to indicate the extent to which such decomposition was followed by recombination with the Inconel wall. (2) The purpose of the second analysis performed on the fuel mixture was to obtain quantitative information about the nature of the attack on the metal tube wall. Thus, a trace quantity analysis for the elemental Inconel components was made to determine the rate of solubility of each of the elements independently under irradiation.

a. Inconel Assay

The Inconel metal tubing used to contain the eutectics was assayed to compare it with the metal specified for the ARE. Except for a somewhat higher carbon content, the metal used for these measurements was not considered significantly at variance with the ARE specifications. The ARE specifications and the results of this analysis are shown below:

Element	ARE Specification (%)	Inconel Analysis (%)
Ni	78.17	76.63
Cr	14.77	14.58
Fe	6.41	6.27
Mn	0.23	0.35
Si	0.23	0.27
Cu	0.14	0.12
C	0.05	0.182
S	0.007	0.007
Ti		0.18

b. Trace-Element Analysis

In the case of each of the four eutectics bombarded, the average irradiated eutectic shows a definite increase in iron content, an increase in nickel content, and a decrease in chromium content after bombardment. However, in only a very few, probably accidental, cases is any correlation outside experimental error found between the change in iron, nickel, or chromium content and the length of bombardment, the rate of bombardment, the product of these two, or the amount of corrosion observed.

The definite trend in the trace-element results (that is, increase in Fe and Ni, decrease in Cr) for each irradiated eutectic studied cannot be related unequivocally to the proton bombardment. The lack of a definite relationship is the case because it was possible to bombard only a small fraction of the molten eutectic with protons, whereas the control tubes

which were furnace heated were uniformly heated throughout their volume. Thus any corrosion in the control samples would occur uniformly over the whole Inconel-eutectic interface, while the bombarded sample would show such effects only in the small area of the interface which was heated by the proton beam.

The net effect is that the trace element results are completely inconclusive with regard to the effects of radiation on the system.

c. Uranium-Fluorine Analyses

Only a few rather poorly substantiated indications can be derived from a study of the results of the uranium-fluorine analyses. These conclusions, just as those in the last section, are further masked by the dilution factor and the smaller effective interface area of the bombarded samples. However, a few statements may be made.

The No. 2 salt mixture shows a decrease in the fluorine content after bombardment, and no change in the uranium content. Additionally, the fluorine decrease is proportional to the integrated value of flux density times time. In the absence of multiple radiation effects on eutectic composition, the uniform uranium assay indicates the validity of sampling, and the decrease in fluoride, though small, may possibly be interpreted as an indication of some decomposition and loss of fluorine in the bombarded samples.

By a similarly circuitous argument, the same effect may be indicated in the No. 14 fuel, where an increase beyond the estimated error in the amount of uranium after bombardment is found in three samples. Since the amount of uranium is small and the analysis is based on the total sample, this increase, too, may be interpreted as a decrease in fluoride.

In eutectic No. 21, only one anomalous result was found. In this case, the fraction of uranium was found to decrease outside the errors of the experiment in that sample which also gave evidence of radiation corrosion. Since it is difficult to interpret this as an increase in any other component of the eutectic system, a different mechanism must be used to explain this result.

Data on fuel No. 27 must be regarded as less certain because the amount of material in the control samples did not permit uranium-fluorine determinations. However, the relative fraction of uranium in the single radiation-corroded sample again shows a decrease outside experimental error, and the situation is analogous to that of fuel No. 21.

Of several possible explanations for the uranium decrease, faulty sampling methods seems to be the most reasonable one. According to this viewpoint, radiation produces a

change in the composition of the salt mixture, and a high-melting, uranium-rich constituent results. In melting the sample of fuel out of the tube, this component, unmelted, remains behind, resulting in a reduced uranium assay. Such an effect might be produced if the UF_4 were reduced by metallic chromium or zirconium in the system to UF_3. In any event, the interpretation of the change in analysis which indicates a radiation effect would remain unaltered.