CENTRAL RESEARCH LIBRARY
DOCUMENT COLLECTION

MARTIN MARIETTA ENERGY SYSTEMS LIBRARIES
3 4456 0349565 2

ORNL 1526
Physics
4a

A NEUTRON TIME-OF-FLIGHT SPECTROMETER

G. S. Pawlicki

CENTRAL RESEARCH LIBRARY
DOCUMENT COLLECTION
LIBRARY LOAN COPY
DO NOT TRANSFER TO ANOTHER PERSON
If you wish someone else to see this document, send in name with document and the library will arrange a loan.

OAK RIDGE NATIONAL LABORATORY
OPERATED BY
CARBIDE AND CARBON CHEMICALS COMPANY
A DIVISION OF UNION CARBIDE AND CARBON CORPORATION
UCC
POST OFFICE BOX P
OAK RIDGE, TENNESSEE

UNCLASSIFIED

ORNL- 1526

This document consists of
52 pages.
Copy 4 of 299. Series A.

Contract No. W-7405, eng. 26

Physics Division

A NEUTRON TIME-OF-FLIGHT SPECTROMETER*

by

Gerard S. Pawlicki

Date Issued:

APR 9 1960

MARTIN MARIETTA ENERGY SYSTEMS LIBRARIES

3 4456 0349565 2

OAK RIDGE NATIONAL LABORATORY
operated by
CARBIDE AND CARBON CHEMICALS DIVISION
Union Carbide and Carbon Corporation
Post Office Box P
Oak Ridge, Tennessee

*A dissertation submitted to the Faculty of the Graduate School of Arts and Sciences of the Catholic University of America in partial fulfillment of the requirements for the degree of Doctor of Philosophy.

UNCLASSIFIED

INTERNAL DISTRIBUTION

1. C. E. Center
2. Biology Library
3. Health Physics Library
4-5. Central Research Library
6. Reactor Experimental Engineering Library
7-11. Central Files
12. C. E. Larson
13. W. B. Humes (K-25)
14. L. B. Emlet (Y-12)
15. A. M. Weinberg
16. E. H. Taylor
17. E. D. Shipley
18. A. H. Snell
19. F. C. VonderLage
20. R. C. Briant
21. J. A. Swartout
22. S. C. Lind
23. F. L. Steahly
24. A. Hollaender
25. W. M. Good
26. M. T. Kelley
27. G. H. Clewett
28. K. Z. Morgan
29. J. S. Felton
30. A. S. Householder
31. C. S. Harrill
32. C. E. Winters
33. D. S. Billington
34. D. W. Cardwell
35. E. M. King
36. E. O. Wollan
37. A. J. Miller
38. R. B. Briggs
39. L. D. Roberts
40. R. N. Lyon
41. W. C. Koehler
42. W. K. Ergen
43. E. P. Blizard
44. M. E. Rose
45. D. D. Cowen
46. W. M. Breazeale (consultant)
47. E. C. Smith
48. P. E. F. Thurlow
49. R. C. Zedler
50. W. Ragan
51. C. J. Borkowski
52. W. Sturm
53. M. J. Skinner

EXTERNAL DISTRIBUTION

54. W. Clary, Georgia Institute of Technology
55. F. R. Shonka, Argonne National Laboratory
56. H. Newson, Duke University
57. W. W. Havens, Columbia University
58. I. Groves, Underwater Sound Laboratory, Orlando, Florida
59. D. B. Beard, University of Connecticut
60. R. F. Bacher, California Institute of Technology
61. Idaho Operations Office
62. Atomic Energy Research Establishment, Harwell, Didcot, Berks, England

63-299. Given distribution as shown in TID-4500 under Physics Category

DISTRIBUTION PAGE TO BE REMOVED IF REPORT IS GIVEN PUBLIC DISTRIBUTION

A NEUTRON TIME-OF-FLIGHT SPECTROMETER

PREFACE

This research problem consists in the construction of an apparatus for measuring neutron total cross sections and in making some measurements which would serve to prove its performance and detect hitherto unobserved neutron resonances in separated isotope samples.

The result of the work has been the completion of a mechanical shutter neutron time-of-flight spectrometer. The resolution and energy calibration of the instrument have been established by absolute time and length measurements as well as by comparison with previous work. Moreover new data were gained on indium and copper.

The problem was suggested by Drs. A. H. Snell and E. O. Wollan who served together with Dr. S. Bernstein as laboratory advisors.

The electronic design was engineered by Mr. William Clary and Mr. I. Groves of the Instrument Department. The detector was assembled by Mr. R. E. Zedler who prepared the apparatus for gas purification and drift velocity measurements. Mr. Lewis of the Engineering Department prepared the detailed drawings for the mechanical apparatus. The machine shop work was done by the research machine shop under the direction of Mr. Paul Kofmehl.

Special acknowledgement is given to Dr. E. C. Smith who became associated with the work before the design was completed. His suggestions and labors on this project for two years have contributed much to its successful completion.

TABLE OF CONTENTS

Page

PREFACE iii

LIST OF ILLUSTRATIONS v

Chapter

I. INTRODUCTION TO NEUTRON SPECTROMETRY 1

II. DESIGN OF THE APPARATUS 4

Geometrical Properties of a Moving Slot Shutter
Anticipated Background and Counting Rates
Sample Cell and Holder
Mechanical Properties of a Rotating Shutter
Shaft and Bearing Design Considerations
Power Requirements of the Drive Motor
Support and Orientation of Rotor and Collimator
Time Base Synchronizing Equipment
Safety Enclosure Surrounding the Rotor
Boron Trifluoride Ionization Chamber
Neutron Source Monitor Counter
Flight Path and Detector Housing
Requirements and Design of Electronic Equipment
Installation of the Apparatus

III. OPERATION OF THE APPARATUS 29

Initial Testing Operations
Burst and Synchronization Checks
Method of Background Determination
Measurements of Total Cross Section
Future Use of the Apparatus

APPENDIX I 45

References to Engineering Drawings

APPENDIX II 46

References to Equipment Photographs

LIST OF ILLUSTRATIONS

Figure		Page
1.	Drift Velocity in BF_3	22
2.	Block Diagram of Counting Equipment	24
3.	Total Cross Section of Silver	39
4.	Total Cross Section of Indium	41
5.	Total Cross Section of Copper	43

CHAPTER I

INTRODUCTION TO NEUTRON SPECTROMETRY

The gap in information on neutron total cross sections in the interval from 10 ev to 100 kev has been the object of considerable investigation in recent years. Van de Graaff studies with resolution of 2 kev[1] have reduced the upper bound of this gap, while improved crystal spectrometers[2] have increased the lower bound. Recently the development of time-of-flight spectrometers[3,4,5] has made it possible to bridge the remaining gap. At the present time neither the Van de Graaff method nor time-of-flight spectrometers have sufficient resolution in the region through which they overlap. Obtaining the necessary increase of resolution appears most promising using time-of-flight spectrometers.

A neutron time-of-flight spectrometer requires short duration bursts of neutrons with a continuous energy distribution. These neutrons are then detected after having traversed a reasonably long distance. Since the neutrons have different velocities, their transit times are different. This dispersion in transit times permits energy analysis of the neutrons.

---

[1] C. T. Hibdon, A. Langsdorf, Jr. and R. E. Holland, Phys. Rev. 85, 596 (1952).

[2] V. L. Sailor, Phys. Rev. 87, 222 (1952).

[3] Walter Selove, A Rotating Shutter Time-of-Flight Neutron Spectrometer for the Resonance Region, ANL-4392, p. 5, November, 1949.

[4] A. W. Merrison and E. R. Wiblin, Nature 167, 346 (1951).

[5] James Rainwater and W. W. Havens, Jr., Phys. Rev. 70, 138 (1946).

The short duration neutron burst can be obtained by means of a mechanical shutter which periodically opens a beam from a continuous neutron source like a chain reactor, or by moderating high energy neutrons produced by a nuclear reaction induced by a pulse of charged particles from an intermittently operated accelerator. Both of these methods of obtaining the neutron burst have been proven practical from the standpoint of resolution and intensity. With a mechanical shutter it is inherent in the apparatus that the area of the interrupted beam is very small. Thus for transmission studies, only a small sample is required. A mechanical shutter also permits an analysis of the neutron spectrum of the reactor, which in itself is a problem of interest. For the study of separated isotope samples, which are generally small, the mechanical chopper is ideal. Accordingly it was decided to construct this type of spectrometer.

The number of neutrons having transit times between t_1 and t_2 must somehow be totaled by a counting system. It is desirable to make $t_2 - t_1$ comparable to the duration of the neutron burst, since the resolution error is the sum of the burst time and transit time interval divided by the flight path length. There is, however, no restriction to simultaneously counting many transit time intervals, and since this speeds up the collection of data over a wide energy range it is desirable to have a multi-channel counting system, each channel counting a different transit time interval.

Having decided upon the mechanical shutter type of time-of-flight spectrometer the specific design of the equipment was planned so as to have the highest possible counting rates at a resolution of approximately 1 μs/meter. This plan was adopted to provide a dependable instrument the resolution of which could be improved by increased flight path as soon as available neutron flux and an improved detector permitted.

Since the instrument was planned for separated isotope studies, the counting rate had to be maximized without increasing the sample area.

CHAPTER II

DESIGN OF THE APPARATUS

Geometrical Properties of a Moving Slot Shutter

Consider the shutter to be a slot moving with constant linear velocity V across a well collimated beam. The apparatus then takes the form indicated schematically below.

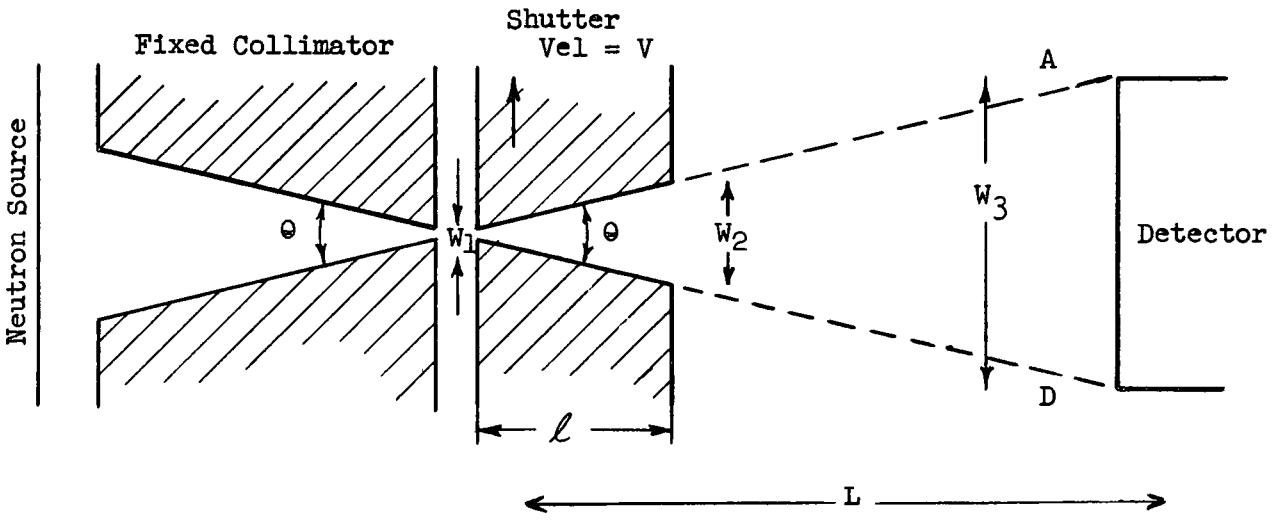

The burst of neutrons transmitted has a triangular variation in intensity with time with a total width $\Delta t = \frac{2\,w_1}{V}$.

Consider w_1 to be very small so that the slot divergence θ can be specified from the incident face of the shutter and with no uncertainty of the starting time of the neutrons through the shutter. Slow neutrons whose transit time through the shutter is greater than $\frac{w_2}{V}$ are not transmitted at all. Neutrons with higher velocity are transmitted, but require a component of velocity in the direction of motion of the shutter slot, hence are directed toward the detector edge marked A and excluded from the edge

marked D. Very high energy neutrons whose transit time is small compared to $\frac{w_2}{V}$ can strike any portion of the detector from edge A to edge D.

Thus it is seen that the shutter is a high energy pass neutron filter whose characteristic is a linear decreasing function with neutron time-of-flight and having a cutoff at a shutter transit time of $\frac{w_2}{V}$. To guarantee that the slowest neutrons from a given burst arrive at the detector before another burst occurs, the second burst must be delayed by a time $\left[\frac{w_2}{V} \times \frac{L}{\ell}\right]$, corresponding to a spacing $w_2 \frac{L}{\ell}$ from the preceding slot. Since

$$\Theta = \frac{w_2}{\ell} = \frac{w_3}{L}$$

slot spacing $$= \frac{w_2 L}{\ell} = \frac{w_3 \ell}{\ell} = w_3 .$$

Consider moving the detector of width w_3 to a distance $L' > L$ along the line O D. In order to reach the detector, a neutron must have a shutter transit time $\frac{L}{L'}$ less than when the detector is at the distance L.

Thus it can be seen that for the detector width w_3 equal to the spacing between slots in the shutter, there is no problem of overlapping either with variation of rotor speed or with flight path variation, provided only that the detector is properly positioned.

For the geometry described, the cutoff function $C(\tau)$ expresses the solid angle variation for various neutron energies,

$$C(\tau) = \left(1 - \frac{\tau}{T}\right)$$

where τ is the time-of-flight of the neutron and T is the time between bursts of the shutter. Rather than measure τ and T for a specific flight path it is convenient henceforth to specify all times per meter of flight path, expressing the time in microseconds.

Expressing τ in microseconds per meter of flight path, the relation of neutron energy in electron volts becomes

$$E = \left(\frac{72.29}{\tau}\right)^2 .$$

Anticipated Background and Counting Rates

The chopper is intended for epi-thermal neutrons and requires timing them with high precision. The detector must be as short as possible. Using a short boron trifluoride counter the detector efficiency is not constant but varies as $\frac{1}{V}$.

The counting rate for a time of flight interval $\Delta\tau = \tau_2 - \tau_1$ using a $\frac{dE}{E}$ spectrum and a $\frac{1}{V}$ detector can be written

$$N = \frac{\Delta t}{2T} \int_{\tau_1}^{\tau_2} K \frac{1}{V} \; C(\tau) \frac{dE}{E}$$

$$N = \frac{\Delta t}{2T} \int_{\tau_1}^{\tau_2} K' \tau \left(1 - \frac{\tau}{T}\right) \frac{d\tau}{\tau}$$

$$N = \frac{\Delta t}{2T} \; K' \left[\left(\tau_2 - \tau_1\right) - \frac{\left(\tau_2^2 - \tau_1^2\right)}{2T}\right]$$

$$N = \frac{\Delta t \; K'}{2T} \left(\tau_2 - \tau_1\right) \left[1 - \left(\frac{\tau_2 + \tau_1}{2T}\right)\right] .$$

For short time of flight intervals

$$\frac{\tau_2 + \tau_1}{2T} \ll 1$$

$$\therefore N \cong \frac{\Delta t \; K'}{2T} \; \Delta\tau .$$

For a rotating shutter, where the burst duration and burst repetition rate ratio $\left(\frac{\Delta t}{T}\right)$ are inherently fixed by the fraction of the time the shutter is open, the counting rate in each channel is independent of rotor speed.

The background count is, the sum of all counts not produced by neutrons which should have arrived in a time interval $\Delta\tau$ specified by counting rate integral. The background can thus be caused by stray slow and fast neutrons leaking out from the reactor, cosmic radiation, spurious noise pulses in the detector and amplifier, neutrons which leak through the shutter when it is closed and also possible pile-up of gamma radiation in the detector. It is initially assumed that the background is primarily due to the leakage of the shutter.

The leakage neutrons are being counted in a given channel for a time $\Delta\tau$. With a repetition time of counting T, the background in each channel is counted for a fraction of time $\frac{\Delta\tau}{T}$. If β is the background measured with a stationary shutter using the specific detector and geometry of the apparatus, the background per channel can be expressed as B.

$$B \doteq \frac{\Delta\tau}{T}\ \beta.$$

The average epi-cadmium transmission of the shutter can be measured under the same conditions

$$\overline{Tr} = \frac{\beta}{\int_{\infty}^{.4} K \frac{1}{V} \frac{dE}{E}}$$

$$\therefore\ B = \frac{\Delta\tau}{T}\ \overline{Tr} \int_{\infty}^{.4} K \frac{1}{V} \frac{dE}{E}$$

The fractional background in the early channels thus becomes

$$F = \frac{B}{N} = \frac{\frac{\Delta\tau}{T}\,\overline{Tr}\int_{\infty}^{.4} K\,\frac{1}{V}\,\frac{dE}{E}}{\frac{\Delta t}{2T}\int_{\tau_1}^{\tau_2} K\,\frac{1}{V}\,\frac{dE}{E}}$$

$$F \cong \overline{Tr}\;\frac{300}{\Delta t}\,.$$

Hence for a 1% background with $\Delta t = 0.5\ \mu s/m$

$$\overline{Tr} = 1.6 \times 10^{-5}.$$

Since the chopper cutoff function reduces the signal counts linearly, this background figure applies only to the first time-of-flight interval. Later the background fraction increases. For this reason the counting is continued only up to $\tau \cong 0.8\ T$.

One further consideration should be noted. As the resolution is increased by increasing the flight path, the detector must remain of constant height w_2, but can be increased in width. The solid angle decreases linearly as $\frac{L}{L'}$, and for a constant channel width the $\Delta\tau$ also decreases by the factor $\frac{L}{L'}$ so the counting rate drops by a factor $\left(\frac{L}{L'}\right)^2$. Worse than this, however, is the fact that the background to signal ratio becomes poorer since $\Delta t = \frac{(\text{time of a burst})L}{L'}$.

Sample Cell and Holder

The transmission of a well collimated neutron beam through a sample can be expressed as

$$T = \frac{\sum_i I_i \, (\Delta A_i) \, e^{-\sigma n_i}}{\sum_i I_i \, (\Delta A_i)}$$

where I_i is the incident flux on the element of sample area ΔA_i which has n_i nuclei per/cm^2. If n_i is a constant then

$$T = e^{-\sigma n}$$

where $n_i = n = \overline{n_i}$.

Thus it is essential to have a constant areal density of the sample in order to determine absolute cross sections. The proper design of a sample cell requires serious consideration when powdered samples are used, since it is inevitable that a powder being compressed into a cell in several stages is bound to have stratification in density. If the strata are normal to the beam, the condition that $\overline{n_i} = n_i$ can still be satisfied. It is therefore required that the cell dimensions be accurately known; that the weight of the cell be small to permit an accurate determination of the sample weight by the difference of weight of the empty and loaded cell; and that the compression of the sample be done in a direction parallel to the neutron beam. Moreover windows of the sample cell must be highly transparent to neutrons.

The sample cells were made of two pieces of aluminum screwed together to define a slot 0.050 inches by 0.900 inches. A group of these cells were made in lengths varying from 0.200 inches to 1.000 inches. Pure aluminum windows 0.033 inches thick were fastened with small screws to close the cell. The outside dimensions of this cell were held to close tolerance in relation to the sample slot.

A sample cell holder which accommodated various lengths of sample cells was made to orient the sample cell in the collimator. The reference dimensions between the collimator, sample holder and sample cell are necessarily very accurate, because the sample area is only very slightly greater than the area of the neutron beam through the collimator.

Mechanical Properties of a Rotating Shutter

The maximum stress in a solid cylindrical rotor[6] occurs at its axis and is tangential tension. This stress increases as the square of the peripheral velocity and is proportional to the density of the material. If the periphery is not able to sustain a tangential stress because it is slotted radially, the material between the slots produces radial forces which increase the tangential stress at the center of the rotor. Since this radial force is proportional to $\frac{\rho v^2}{r}$, it is obvious that in designing a shutter with a slotted periphery it is advantageous to make r as large as possible, since it is desirable to have V as large as possible for producing short duration bursts of neutrons.

For a solid rotor the maximum peripheral velocity is

$$V^2 \propto \frac{\sigma_T}{\rho}$$

where σ_T is the tensile strength of the material. If the ratio σ_T/ρ is investigated for various structural materials, it will be seen that heat treated aluminum, heat treated steel, precipitation hardened monel, and certain plastic laminates have comparable values of σ_T/ρ. Since the hub stress produced by dead loads is independent of the hub density, it is

---

[6] S. Timoshenko, Strength of Materials, Second Edition, Part II (D. Van Nostrand Co., Inc., 1941) p. 236.

desirable to have the highest σ_T for the hub material. For materials producing the dead load it is, of course, obviously desirable to have as low a value of ρ as possible.

The disadvantage in the use of heat treated steels is that they cannot be machined after hardening and the hardness throughout a large body is not uniform, being smallest at the center, where the stresses in a rotor are largest.

When there is a hole down the axis of the rotor, the maximum stress occurs in tangential tension on the surface of the hole. For an infinitesimal hole, the stress is doubled over that occurring in a solid rotor. It is thus apparent that holes near the center of the rotor must be avoided.

Two types of shutter designs were considered. The first, illustrated below, has the shutter slot perpendicular to the axis of rotation.[7]

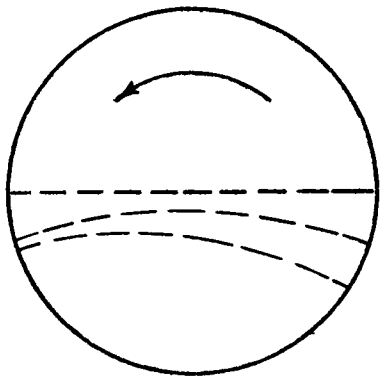

This slot is curved and divergent and is displaced from the diameter so that the beam is opened only to neutrons entering at its narrow end. This design

---

[7] T. Brill and H. V. Lichtenberger, Neutron Cross Section Studies with the Rotating Shutter Mechanism, MDDC-968, p. 2, January 27, 1947.

is essentially an extension of the design used by Dr. Fermi in his earlier thermal neutron chopper. This design has the one virtue that it utilizes the full peripheral velocity of the rotor. Three important disadvantages are to be noted; 1) it has holes near the axis of the rotor, 2) it has a variable shutter leakage and 3) it has a very complex slot shape which would be exceptionally difficult to fabricate. It was decided that this design would not be pursued further.

A second type of design, illustrated below, has slots which are parallel to the axis of rotation.

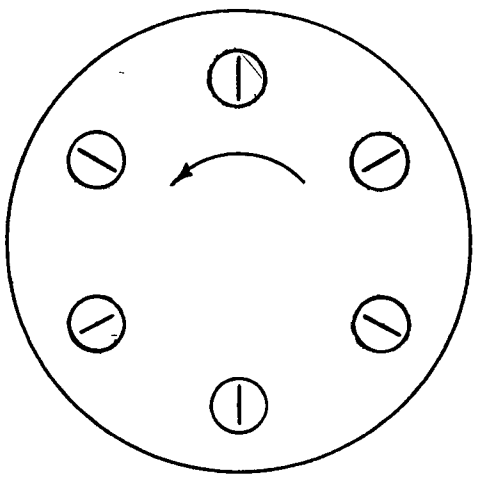

This type was used by Selove[8] in the Argonne National Laboratory fast-chopper. In an endeavor to improve the maximum permissible slot velocity the design illustrated below was evaluated.

---

[8] Selove, op. cit., p. 24.

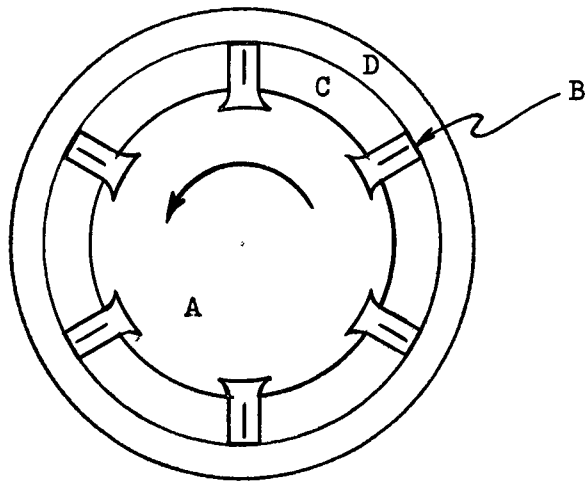

The hub, A, was made of SAE 1030 steel, fourteen inches in diameter and four inches thick, having σ_T = 90 KPSI. The slot assemblies, B, were each fabricated from two pieces of KR monel, dovetailed and brazed into the hub. The region C was fitted by blocks of XXX dilecto phenolic bonded paper base plastic, moulded to the contour of the hub and machined to fit precisely between the slot assemblies. The ring, D, was precision ground from Latrobe select B air hardened tool steel hardened to σ_T = 200,000 PSI. This ring was shrunk on the plastic with an interference of 0.050 inches on the plastic and with a 0.025 inch interference on the monel slot assemblies.

The shutter thus has an opaque zone produced by plastic and monel. The difference of $\overline{Tr}$ for these two materials was checked experimentally and found to be negligibly small.

The stresses in the tool steel ring are due to its own rotation, plus the dead load of the plastic. The hub stresses are due to its own rotation plus the dead load of the monel slot assemblies. The stress computations indicated that this rotor could be spun at a peripheral velocity of 940 ft/sec without exceeding the yield point of any stressed element.

Several features of this design are worth mentioning. While the

shutter is stationary the plastic is subject to a tremendous compressive stress which is relieved by rotation. In the stationary shutter the ring is stressed by the shrink fit to about one-half the stress it ultimately receives in full speed rotation, so without testing, it is obvious that the ring can certainly withstand the rotational stress of 670 ft/sec peripheral velocity. Furthermore, the design has no holes in the hub near its axis and has a dead load on only a fraction of its periphery due to the monel slot assemblies.

The rotor and its shaft assemblies were balanced at K - 25 on a Gishold dynamic balancing machine which was sensitive to 0.1 grams on the periphery of the rotor. The balancing material was removed from the hub at the seven inch radius.

Shaft and Bearing Design Considerations

This design necessarily requires a horizontal axis of rotation, since the beam out of the reactor is directed horizontally. Though not very conveniently applicable to this design, a flexible shaft design was considered. With a flexible shaft the rotor would be self-centering[9] above the first critical speed and would not be disturbed by shifts in balance. This technique, so frequently employed in turbine and ultra-centrifuge design, is unfortunately undesirable in a chopper. The primary objection is that the alignment of the collimated beam in relation to the shutter must be guaranteed, which cannot be done if the center of rotation is not some reference center from which the collimator has been statically oriented. A rigid shaft design was chosen with the first critical speed of approximately

---

[9] A. Stodola, Steam and Gas Turbines, Vol. I (Peter Smith-- New York, 1945) p. 424.

3,000 ft/sec, which is well above the intended operating speed.

The design operating speed of 940 ft/sec corresponds to an angular speed of 12,000 rpm. The weight of the rotor amounts to approximately 250 pounds and the shafts had a diameter of 35 mm at the journal locations. At this speed and load a low friction ball or roller bearing will perform very satisfactorily.[10] Because of the simplicity of lubrication of these low friction bearings and also because of their low power loss they were chosen. The rotor was supported by two pairs of preloaded ball bearings. Roller bearings were abandoned despite their superior load support properties because rollers have a tendency to become skewed to the axis of rotation and wear excessively at high speeds.

The greatest caution was observed in sealing the bearings against dirt. At these high speeds contact slide seals could not be used, so seals with 0.002 inch radial shaft clearance were employed. To further minimize dirt in the bearings, an oil mist lubrication system was chosen. The mist was provided by a small compressor and atomizer which delivered 10 PSI pressure air with controllable mist concentration. The intake air to the compressor was filtered and the exit mist had a mist size selector. This high air pressure guaranteed that the seals would leak and thereby exclude the admission of foreign particles into the bearings. While liquid oil lubrication causes erosion of the outer bearing races at high speeds, necessitating the use of oil mist, in this application it was not entirely necessary, but was chosen because it safeguarded bearing cleanliness and provided excellent cooling with a very simple oiling system. No oil recovery system was necessary since the oil is consumed at a rate of approximately 0.3 ml/hr. The oil selected for the design speed-temperature range was Texaco Capella saybolt 160 refrigerant oil.

---

[10] Thomas E. Rounds, Machine Design 21, No. 1, January, 1949.

The exit cooling oil mist and the bearing mounting cap temperatures of both bearings were monitored continuously by a multi-point Brown recorder. It was tentatively assumed that a 90°C temperature of the bearings could not be exceeded, since above this temperature there is already a danger of drawing the temper of the bearing steel.

Power Requirements of the Drive Motor

Because of the low friction bearings, the primary power loss at high speeds is due to air friction of the rotor. The computed air friction based on smooth cylinder approximation at 12,000 rpm for the rotor was 13 hp in free air.[11] Since the power requirements are reduced linearly with the gas density, provisions were made to operate the rotor in a helium atmosphere at full speed. At lower speeds the close fitting enclosure also serves to reduce the drag, though by only a small factor. A 5 hp drive was chosen which would permit operation to approximately 9,000 rpm in free air and provide satisfactory acceleration rates.

Since background counting rates are a function of rotor speed it is necessary to have some sort of drive speed control. After an investigation of possible electrical drive systems, two possibilities appeared, first, a 1,700 rpm DC motor with thyratron speed control, second, a 3,600 rpm induction motor with an electronically controlled eddy current clutch.[12] Both drives require some speed increase, and since the latter required less and was furthermore considerably cheaper, it was selected. The drive unit selected

---

[11] Theodore Theodorsen and Arthur Regier, Experiments on Drag of Revolving Disks, Cylinders and Streamlined Rods at High Speeds, National Advisory Committee for Aeronautics, Report No. 793, Appendix B, p. 15 (1945).

[12] Adjustable Speed Clutch, Bulletin 611C, Louis Allis Co., Milwaukee, Wisconsin.

was guaranteed for 1% speed control from full to one-sixth the speed at full output torque.

To couple this drive to the rotor and also provide the necessary speed increase, a steel reinforced neoprene toothed timing belt was chosen.[13] This belt can be operated at high speeds and can provide silent synchronized drive without any lubrication. The demand for synchronized drive is essential since the speed control is on the drive motor, not on the rotor.

The drive motor circuit breaker was equipped with 110 v holding coils so that if the 110 v supply to the oil mist lubricator failed the drive power would be immediately removed. The mist lubricator was connected so that it is turned on together with the drive motor and cannot be turned off unless the drive power is also off.

Support and Orientation of Rotor and Collimator

A 600 pound casting was designed to provide good bearing mounts and a support for the collimator. The collimator was positioned by measurement to ensure that the fixed slot of the collimator would be on a radial plane of the rotor. When its proper location was established it was pinned to the casting with tapered steel pins. By the use of these alignment pins it is possible to remove the collimator from the casting without losing its proper orientation. This feature was extremely useful during installation of the equipment at the reactor.

Time Base Synchronizing Equipment

To operate the time gated counting channels, an electrical impulse is necessary which indicates the time at which the shutter is open. This

---

[13] Design of a Gilmer Timing Belt Drive, Form 448D, L. H. Gilmer Co., April, 1949.

synchronizing pulse was obtained by a light beam reflected from a twelve faced mirror on the shutter shaft. The mirror was precisely ground and polished and keyed to the rotor shaft.

The optical system consisted of a lamp house and condenser followed by an f 4.5 enlarging lens which directed a convergent light beam at the mirror. When the shutter is in its open position, the light beam is reflected from one of the faces of the mirror. The reflection occurs from the face near a vertex of the mirror so that only half of the beam area is utilized. The reflected beam is then directed up a twelve inch tube and focused on a slit behind which is a photomultiplier. The size of slit and image size focused on it provide a 2 μs triangular light pulse at design speed.

Another arm and photomultiplier are used to provide a signal 0.8 T after the shutter is open. This signal is used to shut off the timing circuits in preparation for resynchronizing with the next burst. This is a very convenient feature since it automatically controls the timing circuit duty cycle independent of the rotor speed employed.

The design of the synchronizer equipment adjustments was very carefully planned and its convenience and dependability have justified this effort.

The use of a regular polygon mirror for synchronizing presupposes accurately equal slot spacings in the shutter. Prior to assembly this was checked and it was found that the error was negligibly small. If it had been appreciable it would have been necessary to change the face angles of the mirror in relation to its keyway, so that it would produce synchronizer pulses even though the shutter slots were unequally spaced. The possibility of synchronising with a light beam through the shutter slots was not considered practical because of low light intensity.

Safety Enclosure Surrounding the Rotor

When installed at the reactor, the shutter was surrounded by an enclosure which was designed to withstand the impact of a rotor explosion. The enclosure consists of an eight inch liner of plywood surrounded by 1 foot of reinforced concrete. The individual blocks of concrete are bolted together with long 1 inch diameter bolts. The front block is readily removable and can be rolled open to gain access to the shutter to make minor adjustments. The sample holders are removable through a small opening in the side of the blast shield.

This enclosure serves another necessary purpose as a radiation shield. The radiation arises from the final collimation of the beam outside of the reactor shield. With the reactor in operation the intensities in the vicinity of the collimator are well above tolerance.

Boron Trifluoride Ionization Chamber

Two types of detectors were considered; the first, a neutron counter using BF_3, the second, a gamma ray counter which was to count capture gamma rays which would be radiated by a solid block of neutron absorber. The use of the gamma ray detection was rejected because the geometrical efficiency of the gamma ray detector resulted in a lower overall efficiency than was expected from a BF_3 chamber.

The detector required a frontal area 4 x 6 inches and, to minimize timing error, could not be longer than twelve inches. It was planned to make this a single detector and to operate it at about one atmosphere of BF_3 pressure.

A parallel plate geometry was chosen for the chamber because the uniform field design causes the pulse height to increase linearly with time,

with no time delay after the initial ionizing event.[14] Secondly, the uniform field within the chamber ensures better collection of the ionization. The objection to the parallel plate design is its lack of a pulse height plateau, but the necessity for timing the detected event practically forces this choice.

Based on reported work with BF_3 detectors, this detector was to have operated at a voltage of 4 KV with a rise time of the pulse of about 0.1 μ-sec.

Before completion of the chamber it was discovered that impurities in the gas were causing serious recombination loss, and that possibly the rise time was slower than expected.

The gas which had been used was generated from enriched BF_3 complex and had been repeatedly distilled in a glass system. It was observed that repeated distillations failed to bring the pulse height up to expectation. It was further noted that after each distillation a solid residue remained in the flask which was used for distillation. It was concluded that a silicon fluoride was being formed which might be responsible for the poor behavior of the gas. After constructing a silicon free metallic pumping system and still, the gas performed much better as indicated by the voltage plateau. The distillations were performed at a constant pressure of 10 cm of mercury and were cut off when the temperature began to rise.

Despite the acceptable pulse height with narrow bandwidth amplification, the pulse height dropped appreciably with wider bandwidth, indicating that the pulse rise was slower than expected. By installing a uranium 235 fission plate in the detector and measuring the current pulse duration, it was found that BF_3 drift velocity is lower than previously reported.[15] The

---

[14] D. H. Wilkinson, Ionization Chambers and Counters (Cambridge University Press, 1950), p. 124.

[15] Bruno B. Rossi and Hans H. Staub, Ionization Chambers and Counters (McGraw-Hill Book Co., Inc., 1945) p. 13.

drift velocity curve was determined over a practical range of pressures and field strengths and the results are plotted in Fig. 1. The results showed that previous velocities were reported high by a factor of ten.

When completed the chamber could be operated on a 0.5 mc bandwidth amplifier with an 8 KV collection voltage when filled to 16 PSI of BF_3. The maximum pulse height to noise ratio was about five to one.

In shielding the detector of a time-of-flight spectrometer, a rather unusual shielding problem is encountered. It is necessary to prevent back scattering into the detector because of the diffusion time of the scattered neutrons. The chamber is therefore surrounded by a borated paraffin shield leaving an exit for the beam which passes through the chamber. This shield was lined with boron carbide according to the usual practice. In addition, the chamber was completely surrounded by cadmium, which provides slow neutron shielding for the two open ends of the chamber.

Neutron Source Monitor Counter

Since the measurement of a transmission hinges on two determinations, one of the open beam, the other of the sample in measurement, it is necessary to monitor the incident beam to be sure that the flux incident on the shutter is the same in both cases. The final choice of a monitor counter was a one inch diameter proportional counter, five inches long, filled to 13 cm of enriched BF_3. This counter is located outside of the reactor shield in the vicinity of the final beam collimation. Since the neutrons scattered out of the beam by the nickel block are proportional to the number of neutrons incident, this position of the monitor counter is a measurement of the flux emerging from the reactor. The counter is cadmium covered to guarantee that the epi-cadmium flux is being monitored.

DRIFT VELOCITY IN BF_3

UNCLASSIFIED
DWG 14758

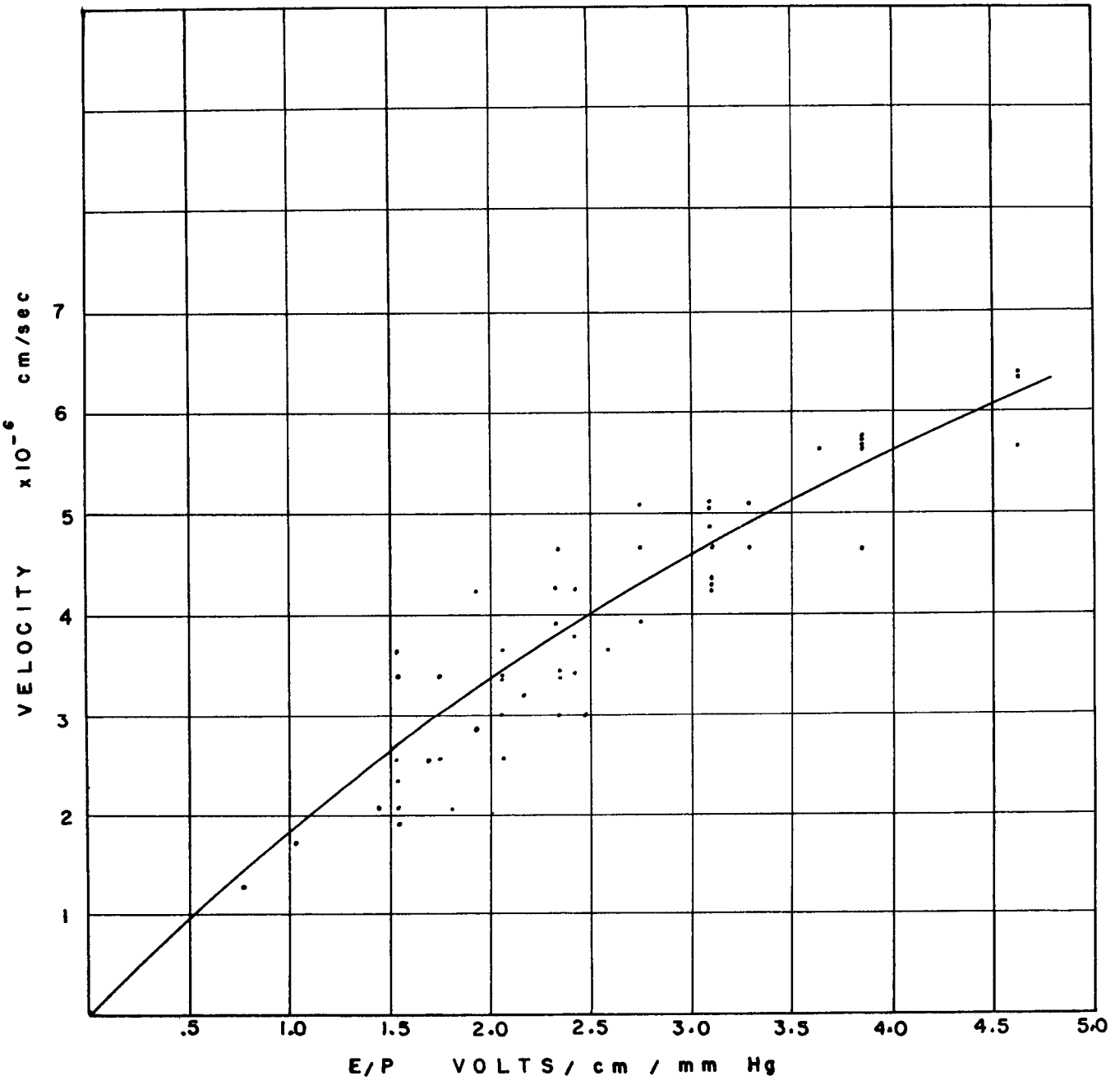

Fig 1

Flight Path and Detector Housing

The flight path to the detector was set at 11.4 meters because of limitations by the terrain. The beam was confined to an evacuated pipe which greatly reduced the hazard to people walking through a rather intense beam.

The flight path was terminated outside the main building and the detector housed in a small metal shack. This shack was provided with an electrical forced air heater thermostatically controlled. For summertime humidity control, a mechanical refrigeration dehumidifier unit was provided. Thus the humidity can be maintained below 40% the year round, greatly reducing the probability of spurious high voltage breakdown pulses at the detector.

Requirements and Design of Electronic Equipment

The primary function of the electronic counting circuits is to count the number of detector pulses occurring in a time between τ_1 and τ_2 after the opening of the shutter.

The most direct and reliable method of accomplishing this is to use counting channels which are sensitized only for a restricted time interval. By contrast to photographic recording from an oscillograph, the data are available, without any further complication, on the dials of mechanical registers.

The block diagram (Fig. 2) illustrates the essential details of a three channel counting system of the type employed in the time-of-flight spectrometer. The "on" photocell pulse initiates an oscillator whose output is shaped into negative switching pulses. The "on" photocell pulse is also fed into the first gate generator circuit. The negative switching pulses are fed into all the gate generator circuits simultaneously.

UNCLASSIFIED
DWG 16050

BLOCK DIAGRAM OF COUNTING EQUIPMENT

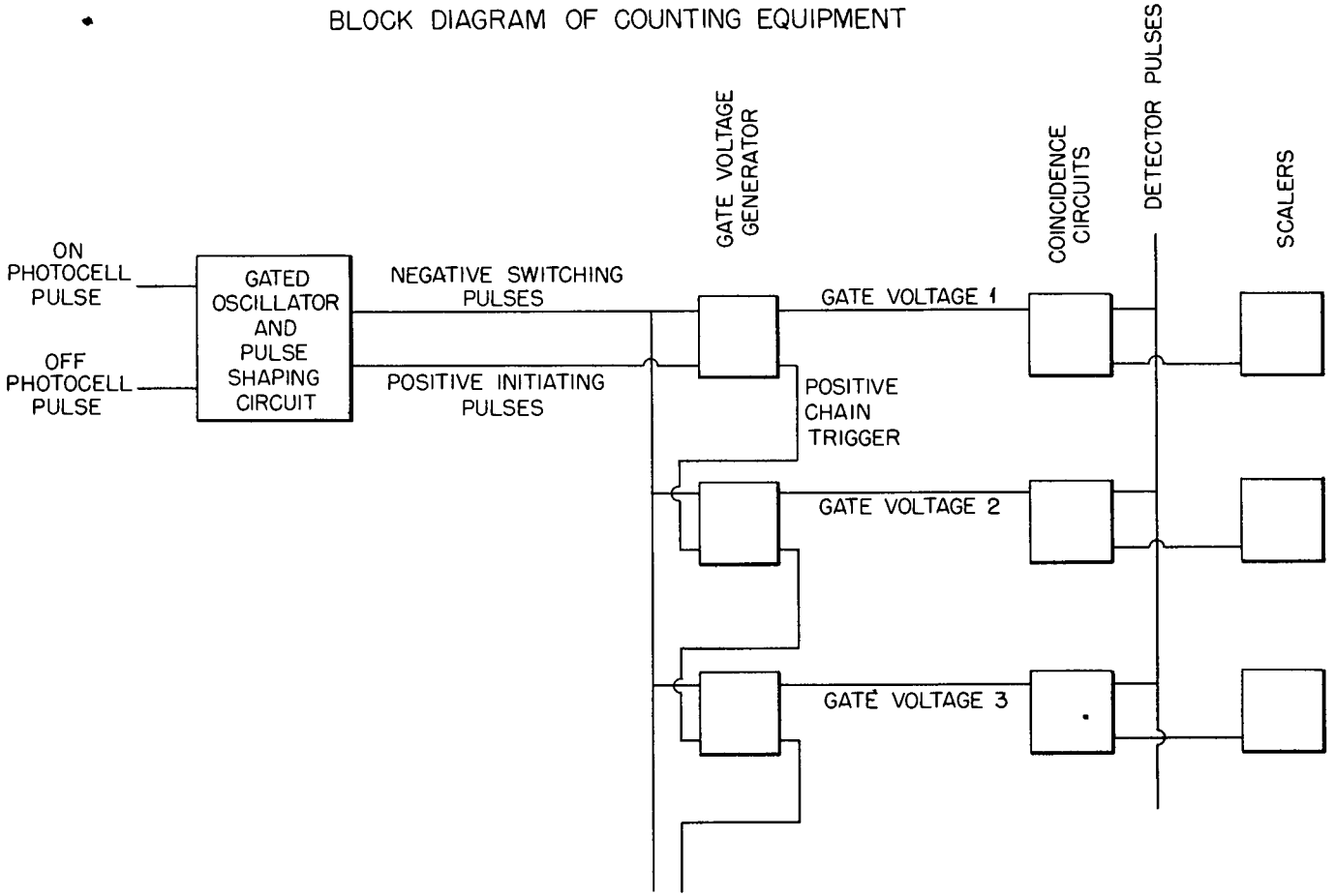

Fig 2

The gate generator is a bi-stable circuit which is initially in the state which can only be triggered by a positive pulse, and is restored to the initial state by the very first negative switching pulse which comes along. The following sequence of changes thus occurs. The positive initiating pulse turns on the first gate circuit, after one cycle of the oscillator a negative switching pulse occurs, which can only affect channel 1 restoring it to the "off" position. As channel 1 is turned off, it produces a positive pulse which is used to switch on the gate generator of the second channel. The gate voltage is then propagated to following channels in the same way. The timing of a gate is determined by the negative switching pulse period, but is dependent upon the correct functioning of all gate generator circuits located ahead of it.

The gate voltages are pulses which are as wide as the negative switching pulse period. The gate voltage of a given channel is fed into a coincidence stage which also receives an input of detector pulses. The coincidence output is fed into a scaler followed by a mechanical register.

With this type of gate generator it is possible to alter the "on" time of channels simultaneously by changing only the frequency of the negative switching pulses. Its primary disadvantage is that malfunction in one channel can result in a time shift of all stages following. By careful design of the chain gate circuit, the most common malfunction results in stopping the chain gating at the defective stage, rendering all stages beyond it inoperative.

For lower resolution scanning, it is convenient to have wider channel widths. Rather than secure these by frequency dividers, individual oscillators are used for each channel width. The channel widths chosen were 4, 8, 12, 16, 20 and 24 μs.

Since the detector signal and the negative switching pulses are

distributed to all channels they have considerable lead capacity in addition to the input capacities of the grids to which they are connected. Very low impedance cascode driver circuits were provided in the timer panel to feed the pulses into these high capacity lines.

Two test facilities were incorporated in the timing panel. The first provided a synthetic photocell "on" and "off" pulse at 60 ~ repetition rate and a synchronized pulse generator. Using this test method the gating is repeated sixty times a second and each channel receives a single synthetic detector pulse within its gated interval. The second test facility has a synthetic repetition rate on the gates, but without a pulse generator. With this procedure it is possible to use the detector background pulses to put pulses into the channels randomly. This test procedure repetition rate was set by an external oscillator and could be used as a static method of counting background prorated to the channel width used in a given run.

Since the apparatus is intended for transmission ratios, no special effort was expended in guaranteeing absolutely equal channel widths. The variation in channel width is not a cumulative effect because of the mode of gate generation, however, there are many factors which can affect the individual channel widths. The primary difficulty occurs due to the width of detector pulse. The output of the A-1 amplifier pulse height selector is a triangular pulse of 0.6 μs duration. If a detector pulse occurs near the end of a channel it can affect the one channel at its end and the following channel at its beginning. In addition to this primary effect, which in itself does not cause variation in channel width but rather channel overlap, the variable sensitivity of the coincidence circuit and the rounding of the gating voltage produces a variation of channel width. By measurements in the second test position counting random pulses, it was observed that there is no channel

width variation greater than 0.4 μs. Since this is only a second order effect of the instrument's resolution, it is regarded as totally unimportant even at the highest resolution.

The timing panel was provided with a delay circuit of 0 - 1500 μ-sec. This delay is used to study low energy neutrons at low rotor speeds when the counting channels do not span the entire time-of-flight interval of the transmitted neutrons.

The components chosen for the circuits were all selected because of their established reliability. Miniature tubes were used, whenever they were equivalent to a standard type. The mechanical registers used were the type known as "Wizards" which, in addition to reliability, permit convenient re-setting.

The counting channels were designed in three channel units per chassis with two chassis per panel. These chassis were arranged in a vertical plane so that when an open relay rack is filled with panels, the chassis define a chimney to induce natural convection cooling of the units.

Since the power drain of the counting channels is quite high, particularly due to the mechanical register power, a 1-1/2 KW D.C. motor generator was used. The generator not only eliminates the need of a battery of rectifiers but in addition provides reasonable voltage regulation. The generator is also a very low impedance supply with a rather low ripple.

Preliminary checking of the electronics showed that by gradually applying the filament voltages, fewer tube failures occurred. After several months of testing, it was found that the frequency of tube failure was about one for each cycling of the filaments. The tube failure was generally limited to the chain gating circuit, though a number of register drive tubes developed internal shorts between the grids due to vibration caused by the mechanical registers.

The D.C. generator drive power was interlocked with the filament 110 volt supply line so that in case of momentary 110 volt failure, which removes heater filament voltage, the B supply is also removed and it is not restored even if the 110 volt supply is reestablished.

Installation of the Apparatus

The installation of the equipment was carried out by a large group of craft workers who performed their individual tasks according to their specialized techniques, guided by installation drawings which were provided.

The electronic equipment was securely mounted to the floor and interconnection between the shutter enclosure, the motor generator, the electronics racks and the power sources were enclosed in rigid conduit. The resulting electrical wiring is thus safe and dependable, in addition to having a neat and finished appearance.

The plate on which the shutter and drive was to be mounted was set in a horizontal plane accurately determined by spirit levels to a precision of 0.001 inch/foot. The mounting plate, which had been tapped for the mounting of the casting, was oriented so that when the shutter casting was installed the axis of the collimator and the hole in the reactor would coincide. The axis of the hole in the reactor shield was determined by a surveying crew prior to the installation. After the mounting plate was positioned it was grouted in to prevent sagging and vibration.

Thus with the alignment of the plate established, the orientation of the beam out of the shutter was known by measurement to survey marks with certainty. The beam pipe and ion chamber were similarly positioned by measurements from the surveyed line.

CHAPTER III

OPERATION OF THE APPARATUS

Initial Testing Operations

The first runs with the complete equipment were measurements of the spectrum and the background. This was done at rather low rotor speeds, and low resolution. The synchronizer was set definitely in advance of the burst of neutrons.

The sole difficulty experienced with the electronic equipment was a ground loop in the leads between the synchronizer photocell circuits and the main timer panel causing serious pulse pickup from the relays in the reactor control system and also from the shutter drive motor. This was readily eliminated by insulating the photocell circuits so that the safety ground to the drive motor was isolated from the circuit shield of the photocell circuit.

A far more serious difficulty was encountered. This was an excessively high background. Measurement of the static epi-cadmium transmission of the shutter indicated a $\overline{Tr} = 3 \times 10^{-3}$, a wholly intolerable situation. By setting the pulse height selector to accept only pulses due to alphas of 3.5 Mev and higher, thus counting neutrons of 1 Mev and higher, it could readily be seen that the background was primarily due to unmoderated fission neutrons.

To temporarily relieve the situation, a six inch aluminum filter was placed in the beam. The aluminum filter resulted in a 25% reduction in counting rate in the epi-thermal region and a fourfold decrease in background. This effect clearly indicates the high energy component of the background since the aluminum cross section is at 1.5 barns up to its first resonance at 50 kev, whereas its average cross section to 0.9 Mev is in the vicinity of

4 barns.

The permanent modification of the incident spectrum was accomplished by inserting more moderator near to the reactor. The resulting background was then acceptably low.

In addition to the background difficulty, an anomalous open beam count was observed. The open beam measurements showed the general cut off characteristic expected and a peak corresponding to the thermal flux also as expected. In addition, a peak was observed at zero time-of-flight and another between it and the thermal peak. The zero time-of-flight peak is readily understood as an enrichment of the spectrum above a $\frac{1}{E}$ flux distribution due to unmoderated fission neutrons. The truly anomalous peak was shown to be a function of rotor speed and not really a peak on the neutron spectrum.

By making a measurement of its position with rotor speed, it was shown to correspond to an opening in the shutter at the monel-plastic interface. Since the monel surface in contact with the plastic is concave specifically to avoid such a calamity, an explanation or cure was not immediately forthcoming. It was finally concluded that the difficulty occurred during the assembly of the shutter when the heated ring had been slipped over the hub and plastic blocks which had been chilled to liquid nitrogen temperature. The plastic blocks having a greater coefficient of expansion than the balance of the hub became loose fitting between the monel slot assemblies. When the ring was fitted over the hub assembly, nothing guaranteed that the undersize plastic blocks were centered so that when they expanded to room temperature they would simultaneously contact the monel at all points. For example, consider a block to have been in contact with the monel on one of its surfaces while at liquid nitrogen temperature. After the ring and hub reach

room temperature the radial force of the shrink fit imposes a terrific force on the plastic so that the friction restrains the block from sliding and positioning itself between the monel slot assemblies. This explanation must have been correct because upon increasing the rotor speed so as to partially relieve the radial shrink-fit force, the anomalous peak disappeared. The amount of shift involved was only of the order of thousandths of an inch so it was presumed that the balance of the rotor had not been affected.

Up to the present time the rotor has been operated for extended periods at speeds of 6,000 rpm. The performance has been entirely satisfactory. The speed control appears to be adequate and the bearing temperatures moderate. As a result of air friction the rotor enclosure reaches a temperature of 45°C. The bearings on the mirror shaft end reach about 47°C while the pulley bearings rise to approximately 62°C. The most probable explanation of the difference of temperatures between the two bearings is an unbalance of the drive pulley.

When the drive power is removed to slow down the rotor, the pulley bearing rises in temperature for several minutes and then begins to fall. The rise is due to a larger belt power transfer. When the rotor is being driven, the power transfer is that due to the rotor friction, however, when the drive is removed, the rotor energy is now being dissipated by the inferior bearings of the drive motor and so the belt transmits a greater power under these conditions.

In accelerating the rotor, a procedure of stepwise speed increase has been used. To bring the rotor up to a speed of 6,000 rpm it is brought up in five steps corresponding to rotor speeds of 1,400, 2,800, 3,500, 4,200 and finally 6,000 rpm. A pause is allowed at each of these speeds till the bearing temperatures show a tendency toward leveling off. If the rotor were

to be immediately accelerated to full speed, the temperature of the casting surrounding the bearing would not rise with the bearing temperature and a large bearing load would result. This load corresponds to a dimensional interference in the bearing of 0.0012 inch -- considerably larger than the normal preload interference of about 0.0004 inch used in these bearings.

While operating at high speeds, the quantity of oil in the mist was varied. Starting with a mist which was heavy enough to see, the amount of oil was reduced to the point where the bearing temperatures hit a minimum. This amount is remarkably small. While operating, the only evidence that oil is being atomized is a very infrequent drop of oil which returns to the reservoir from the mist size selector in the atomizer unit. Some liquid oil residue is observed around the rotor casting after many hours of operation.

Exclusive of the waiting time for temperature readjustment, the rotor can be accelerated to 6,000 rpm in about four minutes. Approximately one hour is required for the rotor to come to a standstill from this speed.

Since the drive motor is equipped with a centrifugal fan for cooling the eddy current clutch, a duct was connected to its exit which ventilates and cools the entire apparatus within the safety shield.

Burst and Synchronization Checks

With the synchronizer set definitely early, an accurate dynamic check was made of the burst shape which gave the cumulative effect of all twelve slots and the twelve mirror faces.

The shutter was rotated at approximately a 600 rpm corresponding to a computed burst width of 80 μs. The counting channels were operated at a width of 4 μs. A paraffin filter about one inch thick was located in the beam to remove all low energy neutrons whose time-of-flight was less than 0.4 μs/meter. Under these conditions, rather than measure the spectrum, the counts

per channel plot in a triangular distribution corresponding to the opening and closing of the shutter. The time corresponding to the base width of the triangle indicates the true neutron burst width including all the errors of slot spacing and mirror face error. The results of this trial showed that the average burst had a width very nearly equal to the computed burst width.

The foregoing run also affords an excellent absolute determination of the synchronization correction. The following sketch shows the shape of the light pulse of the synchronizer and the neutron pulse out of the shutter at some rotor speed ω .

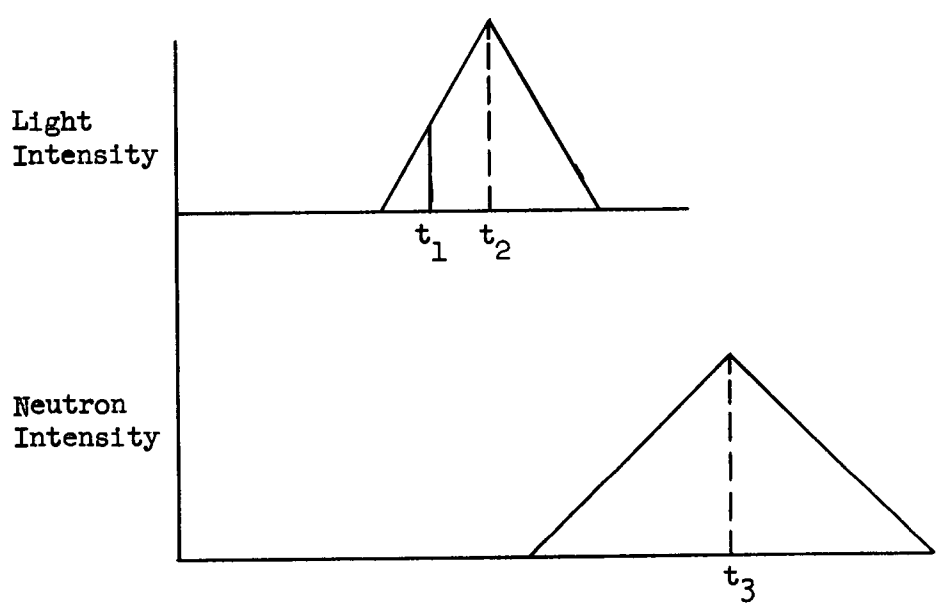

On this absolute time scale, the light pulse reaches its maximum at t_2 and the neutron pulse reaches its maximum at t_3. $t_3 > t_2$ because the synchronization is advanced. Actually the electronic circuits begin operating at $t_1 < t_2$ at which time the light output overrides various bias voltages in the "on" photocell pulse system. True zero time is the point t_3 when the shutter is fully open. It is therefore necessary either to have $t_1 = t_3$

independent of ω, or establish $t_3 - t_1$ as a function of ω.

$$t_3 - t_2 = \frac{K_1}{\omega}$$

where K_1 is the angular separation between the correct and actual mirror setting. Let T_ℓ be the width of the light pulse

$$t_1 = t_2 - K_2 T_\ell$$

then

$$T_\ell = \frac{K_3}{\omega}$$

$$\therefore t_3 - t_2 = \frac{K_1}{\omega} = t_3 - t_1 - \frac{K_2 K_3}{\omega}$$

$$\therefore t_3 - t_1 = \frac{K_4}{\omega} .$$

So it is obvious that if the $t_3 - t_1$ is set to be zero at one value of ω, the synchronization does not change with speed.

For convenience $t_3 - t_1$ is chosen to be about equal to a half burst width and a synchronization correction is always computed for various values of ω. It must be noted that if $t_3 - t_1$ is determined at $\frac{1}{n}$ of the top operating speed, it can be measured to about only one channel width, however, at full speed the synchronization correction is then known to $\frac{1}{n}^{th}$ of a channel width.

Method of Background Determination

As previously stated the background count per channel

$$B = \frac{\Delta \tau}{T} K_1 \text{ x (total counting time)}$$

or

$$B = K_2 (\Delta \tau) \omega (\Delta t).$$

Thus if the background counting rate with a given channel width is known, the background can be computed for another rotor speed.

Background was determined at first by rotating the shutter at 2,400 rpm and delaying the counting channels 162 μs/meter. Under these conditions a cadmium sheet removes the signal neutrons and the counts which are observed in the channels are due to epi-cadmium leakage of the shutter plus other extraneous pulses. The background thus determined is correct for each channel despite small channel width variations.

The big disadvantage of this method is the long time required to gain sufficient statistical accuracy of the background count. Let ω_b and t_b be the conditions under which the background is determined and ω_s, t_s be the conditions for which the background is to be computed using the same channel width $\Delta\tau$. Then

$$B_s = B_b \frac{\omega_s t_s}{\omega_b t_b}$$

$$\Delta B_s = \frac{\omega_s t_s}{\omega_b t_b} \sqrt{B_b} .$$

Since $\frac{\omega_s}{\omega_b} = 2.5$, to get $\Delta \beta_s = \sqrt{B_b}$ requires $t_b = 2.5\ t_s$.

In the usual method of measuring transmissions as discussed by Rose and Shapiro, three counts are determined, the open beam, N_o, the sample in N, and the background B, for times t_o, t_1 and t_2, respectively. In the statistical computation, the accuracy of the determination is governed by the rates r_o, r_1 and r_2 each weighted with its corresponding time factor, i.e. t_o, t_1 and t_2. Thus it is obvious that for the background determination method just described, the rate r_2 must have the angular velocity factors in addition to the time factor as its weight.

Thus if the optimum time apportionment specified by Rose and Shapiro is $t_o : t_1 : t_2 = x : y : z$, then for the previously described method of determining background it is necessary to take

$$t_o : t_1 : t_2 = x : y : \frac{\omega_s}{\omega_b} \quad z.$$

Since it is obviously desirable to make $\frac{\omega_s}{\omega_b}$ as small as possible, another method of background determination was devised. With the shutter in its closed position the electronic circuit repetition rate was triggered by an external oscillator with a period of about 400 μ-sec corresponding to a shutter speed of 12,000 rpm. Thus the weighting factor $\frac{\omega_s}{\omega_b}$ is reduced.

When a thick sample is used, the background with the sample in is reduced by a factor $\overline{Tr}$ = the average epi-cadmium transmission of the sample. Thus another weighting factor is applied to the background count. Since this weighting factor applies only to the sample in background, the time ratio $t_o : t_1 : t_2$ cannot be deduced readily from the work of Rose and Shapiro. However, it must be noted that $\overline{Tr} < 1$, therefore the choice $t_o : t_1 : t_2$ determined for $\overline{Tr} = 1$, while not optimum, does not spoil the statistical accuracy.

It must be noted that $\overline{Tr}$ is not truly a transmission, but a ratio of counting rates with sample in and sample out for the closed shutter. The statistical accuracy of $\overline{Tr}$ can be made perfectly adequate in a relatively short time, since the counting rates involved are 200 times greater than the counting rates per channel with the shutter rotating at 6,000 rpm.

This method of background determination is perfectly sound if the background counts are due to any source whatsoever, with one notable exception. It has been observed that the A-1 amplifier multiple pulses when a high voltage

breakdown occurs.[16] In the case of the counting channels this results in a large number of channels each accepting the multiple pulses. With the static determination using a single scaler, the resolving time is not as fast, so the same multiplicity of counts is not observed. Thus to use a static determination of $\overline{Tr}$ for the sample it is necessary that a negligible number of background counts be due to high voltage breakdown. Since this is actually the case with humidities less than 50%, the method is entirely reliable.

Thus considering the effects of the statistical weights it is possible to derive the statistical accuracy of the transmission.

If ω_s = rotor speed at which the sample in and sample out counts are accumulated.

ω_b = rotor speed at which background determinations are made, or equivalent speed if an oscillator is used.

t_o = time during which open beam count is made.

t_1 = time during which sample in is counted.

t_2 = time background is counted.

$\overline{Tr}$ = average epi-cadmium transmission of the sample.

N = total number of counts measured with sample out (including any background counts).

N_o = total number of counts measured with sample in.

B = total number of background counts collected at the speed ω_b.

$$\text{Transmission } T = \frac{\dfrac{N}{t_1} - \dfrac{\omega_s}{\omega_b}\,\dfrac{\overline{Tr}\,B}{t_2}}{\dfrac{N_o}{t_o}\,\dfrac{\omega_s}{\omega_b}\,\dfrac{B}{t_2}} .$$

---

[16] W. H. Jordan and P. R. Bell, Instructions for Use of Al Amplifier and Preamplifier, MonP-323, p. 9, February 15, 1949.

$$\therefore \left(\frac{\Delta T}{T}\right)^2 = \frac{\dfrac{N}{t_1^2} + \left(\dfrac{\omega_s \overline{Tr}}{\omega_b t_2}\right)^2 B}{\left(\dfrac{N}{t_1} - \dfrac{\omega_s \overline{Tr}}{\omega_b t_2}\right) B} + \frac{\dfrac{N_o}{t_o^2} + \left(\dfrac{\omega_s}{\omega_b t_2}\right)^2 B}{\left(\dfrac{N_o}{t_o} - \dfrac{\omega_s}{\omega_b t_2} B\right)^2}$$

The optimum sample transmission specified by Rose and Shapiro[17] is determined for the best determination of a cross section. When it is desirable to know a transmission to the best accuracy, the whole problem must be recomputed.

Measurements of Total Cross Section

After the completion of the absolute calibrations of the apparatus, the first transmission study made was of the 1.4 volt indium resonance to compare the energy values previously quoted.[18] The results showed excellent agreement.

Having established the accuracy of the energy determinations, attention was then focused on a comparison of resolution with previous work. For this determination, the transmission of a one-fourth inch thickness of silver was measured and compared with the work of Selove[19] quoted at ~ 1.0 μs/meter. The data for silver and the comparison with Selove's work are shown in Fig. 3. It will be noted that the data show higher peaks and valleys than the work of Selove and further show some narrowing of the resonances indicating that the resolution was slightly better. The sum of the burst width and channel width

---

[17] M. E. Rose and M. M. Shapiro, Phys. Rev. 74, 1853 (1948).

[18] Robert K. Adair, Rev. Mod. Phys. 22, 32 (1950).

[19] Selove, op. cit., p. 33.

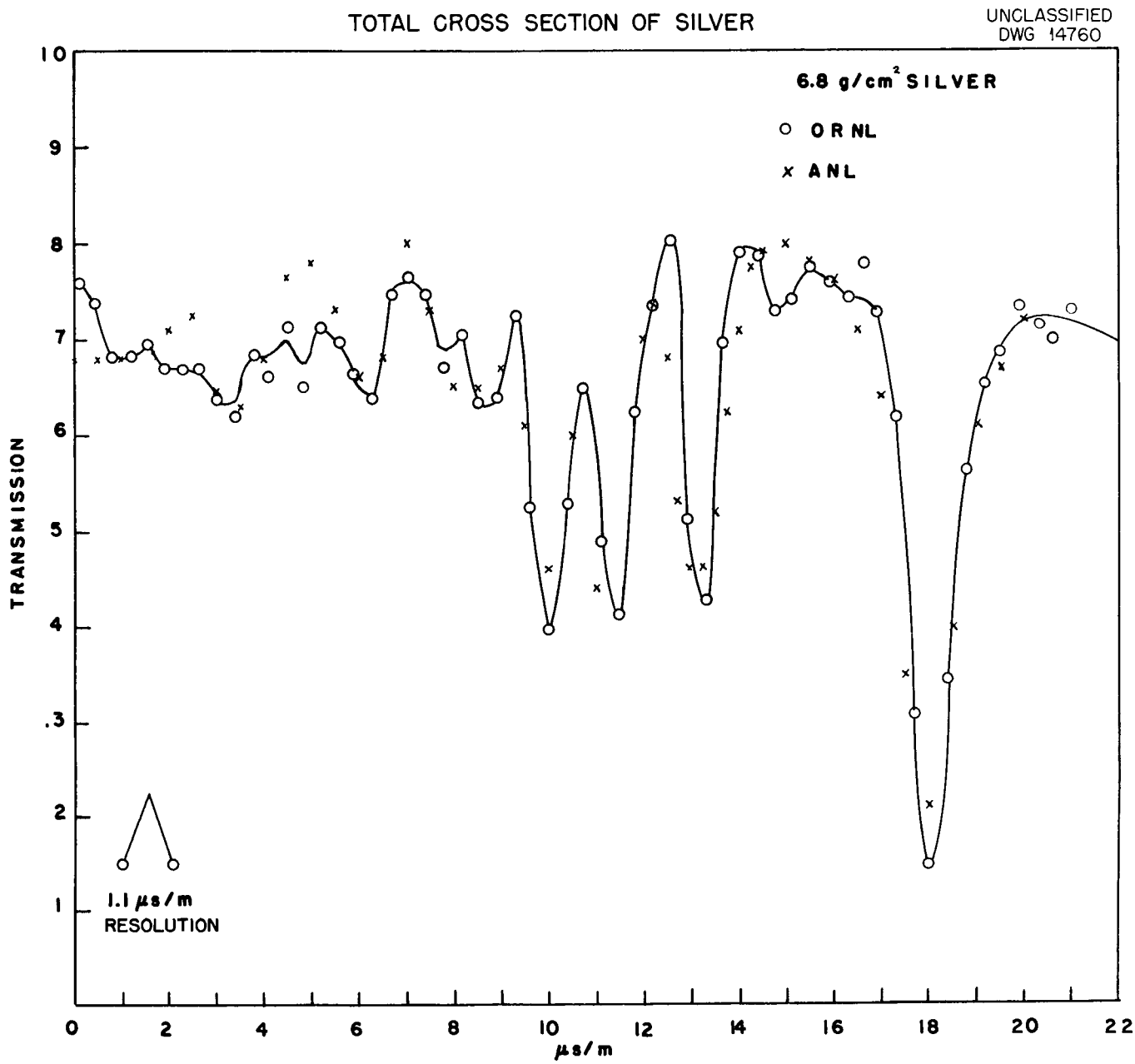
TOTAL CROSS SECTION OF SILVER
UNCLASSIFIED
DWG 14760
6.8 g/cm² SILVER
O ORNL
x ANL
TRANSMISSION
10
9
8
7
6
5
4
.3
2
1
1.1 μs/m
RESOLUTION
0
2
4
6
8
10
12
14
16
18
20
22
μs/m

Fig 3

for this comparison run was 1.1 μs/meter. The result of the resolution comparison was thus quite favorable.

Being confident of the calibration and resolution of the apparatus both on an absolute and comparative basis, some original investigations were conducted. The high energy transmission of indium down to 5.8 volts was measured. A large number of previously unreported peaks were observed.

Knowing the behavior of the metallic indium sample, three samples of indium oxide were prepared. The first sample was made of oxide having the natural isotopic abundance. The second sample was depleted in indium 113 to a concentration of 0.2% and was of a thickness which gave an indium 115 concentration equal to that in the first sample. The third sample was made from oxide depleted in indium 115 to a concentration of 30%. This sample was prepared to have a concentration of indium 113 equal to that in the first sample.

The results of the three transmission measurements are plotted in Fig. 4. By comparison of the three curves the following isotopic assignments can be made conclusively:

Indium 113	Indium 115
14.3 ± 0.5 ev	8.86 ± 0.22 ev
21 ev	11.9 ev
25 ev	22.4 ev
31 ev	40 ev
2200 ev	

The peaks at 93 and 40 volts consist of a multiplicity of resonances of both isotopes and the resolution is insufficient to study them.

These results reported at the Washington Meeting of the American Physical Society[20] were corroborated by the work of Sailor[21] of Brookhaven

[20] G. S. Pawlicki and E. C. Smith, Phys. Rev. 87, 221 (1952).

[21] Sailor, op. cit., p. 222.

UNCLASSIFIED
DWG 14728

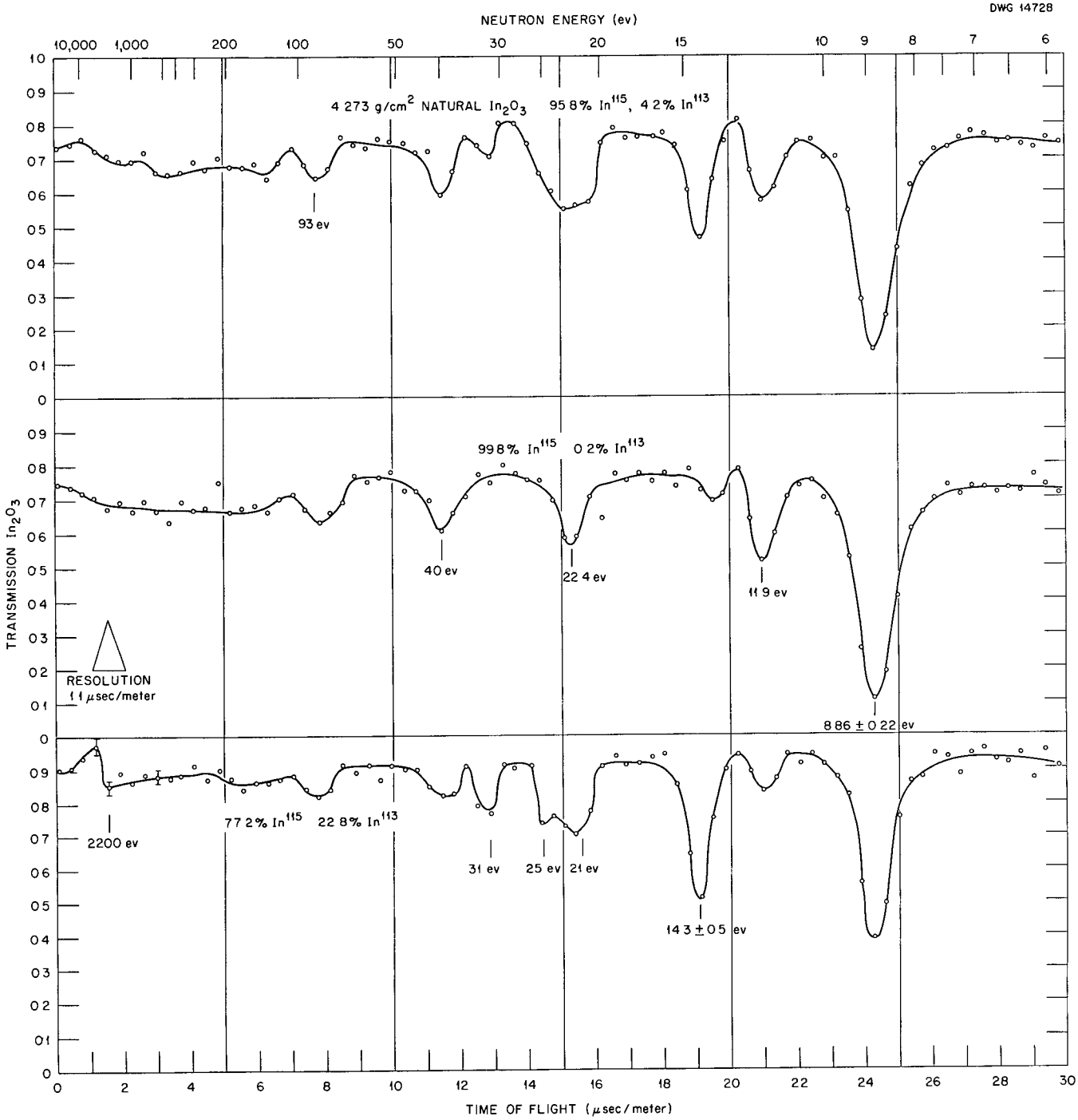

FIG 4

National Laboratory for the energy interval 9 to 25 volts.

The transmission of metallic copper was studied and the results are shown in Fig. 5. Separated isotope studies have not been performed.

The data up to this time have been of a survey nature and have been analyzed only for the location and isotopic identification of the resonances. The complete analysis requires the evaluation of the resonance widths[22,23] and peak cross sections. Since the resolution error in the high energy data is greater than the resonance width, the problem of evaluation of the resonance parameters is not a simple fitting of parameters to the observed data. It is absolutely necessary to include the effect of the resolution in this determination.

The previous work of Selove at Argonne National Laboratory, and Rainwater and Havens at Columbia, have their individual merits depending upon one's preference in devoting large amounts of time to counting or to computing. In the case of a single isolated resonance there seems to be little choice between them. The actual problem in the case of analysis of indium or any weak resonance adjacent to a strong resonance makes the applications of either method quite formidable. The use of Selove's method seems to be impossible for the weak resonances. The method of Rainwater and Havens seems most promising. The diminsionless representation of the resonance parameters can be tabulated and this saves much recomputation; however, the application of the resolution smearing must be made by numerical integration for each resonance.

---

[22] W. W. Havens, Jr. and James Rainwater, Slow Neutron Cross Sections Measured with a Neutron Beam Spectrometer, MDDC-3, p. 14, May, 1946.

[23] Selove, op. cit., p. 19

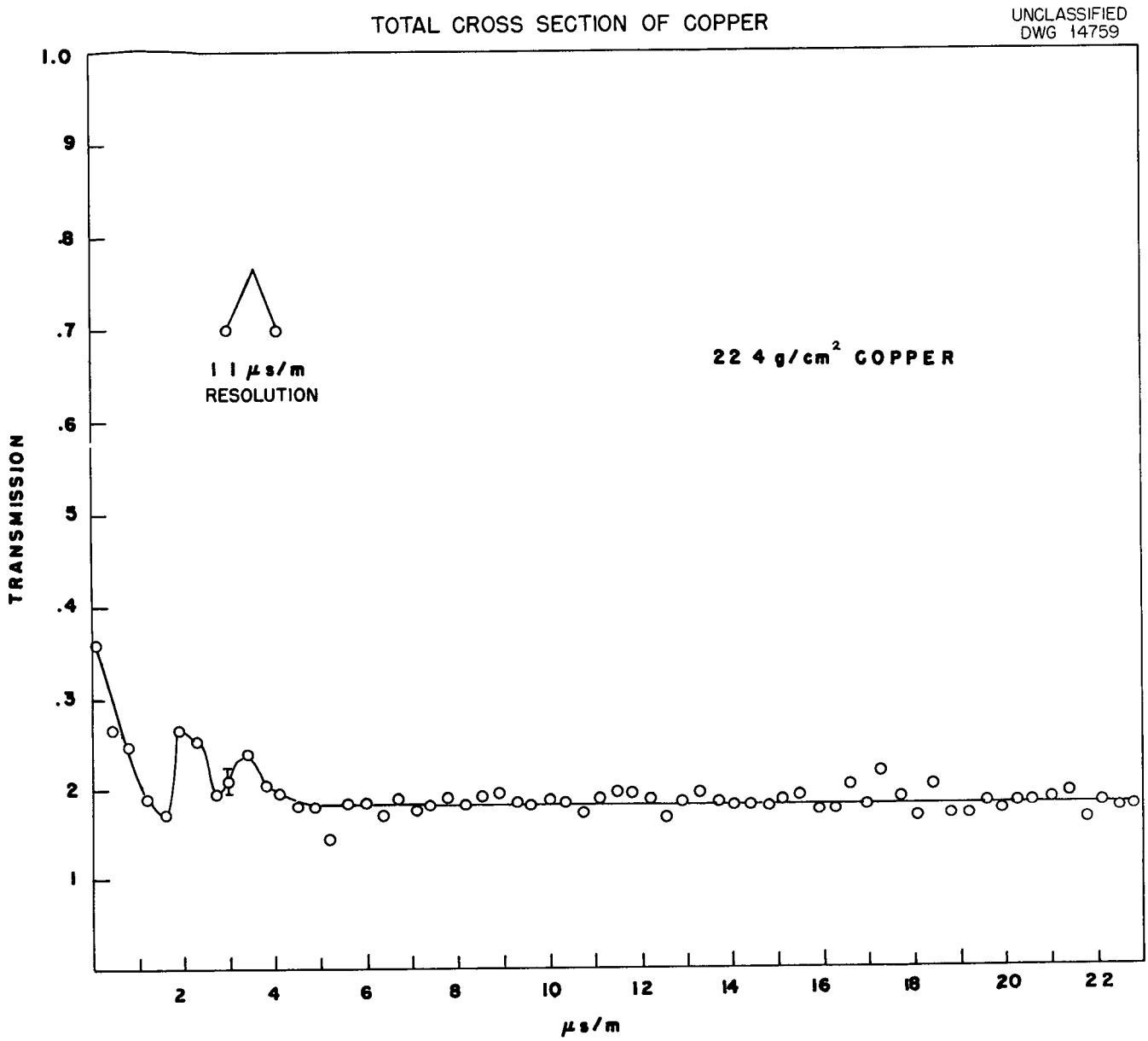
TOTAL CROSS SECTION OF COPPER
UNCLASSIFIED
DWG 14759
1.0
.9
.8
.7
.6
.5
.4
.3
.2
.1
TRANSMISSION
1 1 μs/m
RESOLUTION
22 4 g/cm² COPPER
2
4
6
8
10
12
14
16
18
20
22
μs/m

Fig 5

Future Use of the Apparatus

Much of the future work will probably be confined to measurement of separated isotopes of interest in reactor design, among these fissionable isotopes and also fission products. The range of energy of interest for this work is not too high and the present resolution is quite adequate.

For studies of lighter elements, some improvements must be made in the resolution. As previously mentioned, the flight path should be increased. The most serious problem is producing a larger detector. While the liquid scintillation detector is a possibility,[24] its present performance seems to be unacceptable. Very likely a collection of ion chambers would be superior. In order to increase the detector efficiency, the possibility of a reflector placed behind the chamber appears promising. The reflector should be made of a thick sample of high Z material so that it does not moderate the neutrons and cause time delays. A 30% improvement of detector efficiency seems possible without altering the chamber. This reflector does effectively increase the detector length, but for large flight paths this is not serious.

Preparations are in progress for the measurement of capture gamma rays[25] and scattered neutrons.[26] These two problems require a large amount of sample placed in the beam at the end of the flight path. Hence they are more suitable with short path lengths where a moderate size of sample is usable. Here the use of separated isotope samples is, of course, out of the question.

---

[24] F. B. Harrison, Nucleonics 10, 40, June, 1952.

[25] E. B. Meservey, Neutron Capture Cross Sections by (n,γ) Reactions, CU-97 -- DR-1704, Columbia University, November 26, 1951.

[26] Jay Tittman and Charles Sheer, Phys. Rev. 83, 747 (1951).

APPENDIX I

Detailed drawings of the equipment are on file with the Engineering Department of Oak Ridge National Laboratory. The following assembly drawings give references to detail sheets.

Mechanical Assembly - - - - - - - - - - - Dwg. E-7645

Electronic Equipment- - - - - - - - - - - Dwg. Q-1064

Ionization Chamber- - - - - - - - - - - - Dwg. Q-1046

APPENDIX II

Photographs of component parts and views of the assembly are on file with Central Files of Oak Ridge National Laboratory. The following photographs have been taken:

Rotor and Collimator Sub-assembly - - - - - - No.	9482 9483
Shutter and Drive Assembly- - - - - - - - - -	9665
Blast Shield Shutter Installation - - - - - -	9666
Assembled Electronic Equipment- - - - - - - -	7959
Completed Installation- - - - - - - - - - - -	9664 9667 9668
Detector Shack with Ion Chamber Installed - -	9663
Close-ups of a Counting Channel - - - - - - -	7958 7960 7963
Close-ups of the Timer Panel- - - - - - - - -	7958 7961 7962