1-22

[redacted]

CENTRAL RESEARCH LIBRARY
DOCUMENT COLLECTION

Inv 57

Inv 58

ORNL-1639
Progress
5a

MARTIN MARIETTA ENERGY SYSTEMS LIBRARIES
3 4456 0349603 6

DECLASSIFIED
CLASSIFICATION CHANGED TO:
BY AUTHORITY OF: E. G. Murphy 10/30/57
BY: J. Peterka 12/14/65

LABORATORY RECORDS

ANALYTICAL CHEMISTRY DIVISION

SEMIANNUAL PROGRESS REPORT

FOR PERIOD ENDING OCTOBER 20, 1953

AEC RESEARCH AND DEVELOPMENT REPORT

CENTRAL RESEARCH LIBRARY
DOCUMENT COLLECTION

LIBRARY LOAN COPY

DO NOT TRANSFER TO ANOTHER PERSON

If you wish someone else to see this document, send in name with document and the library will arrange a loan.

Inv 56

Inv 55

OAK RIDGE NATIONAL LABORATORY
OPERATED BY
CARBIDE AND CARBON CHEMICALS COMPANY
A DIVISION OF UNION CARBIDE AND CARBON CORPORATION

UCC

POST OFFICE BOX P
OAK RIDGE, TENNESSEE

[redacted]

[redacted]

[redacted]

ORNL-1639

This document consists of 44 pages.

Copy 5 of 148 copies. Series A.

Contract No. W-7405-eng-26

ANALYTICAL CHEMISTRY DIVISION

SEMIANNUAL PROGRESS REPORT

for Period Ending October 20, 1953

M. T. Kelley, Director
C. D. Susano, Associate Director

DATE ISSUED

DEC 16 1953

OAK RIDGE NATIONAL LABORATORY
Operated by
CARBIDE AND CARBON CHEMICALS COMPANY
A Division of Union Carbide and Carbon Corporation
Post Office Box P
Oak Ridge, Tennessee

[redacted]

MARTIN MARIETTA ENERGY SYSTEMS LIBRARIES

3 4456 0349603 6

[redacted]

ORNL-1639
Progress

INTERNAL DISTRIBUTION

1. C. E. Center
2. Biology Library
3. Health Physics Library
4. Reactor Experimental Engineering Library
5-6. Central Research Library
7-11. Laboratory Records Department
12. Laboratory Records, ORNL R.C.
13. C. E. Larson
14. W. B. Humes (K-25)
15. L. B. Emlet (Y-12)
16. A. M. Weinberg
17. J. A. Swartout
18. E. D. Shipley
19. E. J. Murphy
20. F. C. VonderLage
21. M. T. Kelley
22. E. H. Taylor
23. A. H. Snell
24. F. L. Culler
25. S. C. Lind
26. R. C. Briant
27. T. A. Lincoln
28. C. E. Winters
29. A. Hollaender
30. K. Z. Morgan
31. C. P. Keim
32. G. H. Clewett
33. A. S. Householder
34. D. W. Cardwell
35. E. M. King
36. C. D. Susano
37. G. E. Boyd
38. J. B. Briggs
39. G. W. Parker
40. L. J. Brady
41. H. P. House
42. O. Menis
43. C. H. Secoy
44. L. E. Burkhart
45. R. N. Lyon
46. S. I. Reynolds
47. R. F. Thomason
48. R. Rowan, Jr.
49. D. E. LaValle
50. A. R. Brosi
51. A. F. Roemer, Jr.
52. E. I. Wyatt
53. G. W. Leddicotte
54. C. Feldman
55. T. E. Willmarth
56. C. L. Burros
57. J. H. Edgerton
58. L. T. Corbin
59. D. D. Cowen
60. P. M. Reyling
61. S. D. Schiffman (K-25)
62. H. P. Raaen
63. J. C. White
64. W. K. Miller
65. U. Koskela
66. D. J. Fisher
67. G. C. Williams
68. J. H. Frye, Jr.
69. R. L. Livingston
70. A. S. Meyer, Jr.
71. S. A. Reed
72. P. M. Upton
73. E. P. Wigner (Consultant)
74. H. L. Hemphill
75. J. A. Lane
76. R. W. Johnson

[redacted]

[redacted]

EXTERNAL DISTRIBUTION

84. Argonne National Laboratory
85. Atomic Energy Commission, Washington
90-9. Brookhaven National Laboratory
94-97. Knolls Atomic Power Laboratory
98-104. General Electric Company, Richland (1 copy to A. H. Bushey)
105-108. Los Alamos Scientific Laboratory
109. Mound Laboratory
110-112. New York Operations Office
113. Patent Branch, Washington
114-128. Technical Information Service, Oak Ridge
129-132. University of California Radiation Laboratory, Berkeley
133-136. Carbide and Carbon Chemicals Company (Y-12 Plant)
137-140. E. I. Du Pont Company, Wilmington
141-142. New Brunswick Laboratory
143-14. Westinghouse Electric Corporation
145-47. Phillips Petroleum Company
148. North American Aviation, Inc.

[redacted]

[redacted]

Reports previously issued in this series are as follows:

ORNL-686	Period Ending March 31, 1950
ORNL-788	Period Ending June 30, 1950
ORNL-867	Period Ending October 10, 1950
ORNL-955	Period Ending January 10, 1951
ORNL-1088	Period Ending March 26, 1951
ORNL-1113	Period Ending June 26, 1951
ORNL-1129	Period Ending September 10, 1951
ORNL-1233	Period Ending December 26, 1951
ORNL-1276	Period Ending March 26, 1952
ORNL-1361	Period Ending June 26, 1952
ORNL-1423	Period Ending September 26, 1952
ORNL-1474	Period Ending January 10, 1953
ORNL-1547	Period Ending April 20, 1953

[redacted]

[redacted]

CONTENTS

ABSTRACT ix

PUBLICATIONS xii

ANALYTICAL CHEMISTRY DIVISION – X-10 SITE

RESEARCH AND DEVELOPMENT 1
Ionic Analyses 1
Simultaneous Determination of Nickel and Manganese in HRE Solutions 1
Simultaneous Colorimetric Determination of Copper, Cobalt, and Nickel as Diethyldithiocarbamates 1
Polarographic Determination of Europium in Lithium Iodide 1
Evaluation of the Model 1338, Series 1, Derivative Polarograph 1
Development of Analytical Methods Relative to the Chlorine Trifluoride Process 2
Analysis of 50-mg Samples of Stainless Steel 2
Vacuum-Fusion Analysis of Metals 2
Analytical Instrumentation 3
Analytical Applications of High-Frequency Oscillators. III. Laboratory-Model Oscillator 3
Development of an Automatically Recording, Internal-Standard, Flame Photometer 3
Compensating, Coulometric Power Supply for Karl Fischer Water Titrator 4
Diaphragm-Type Pipet Manipulator 4
Radio-Frequency Fusion Apparatus for Preparation of Sodium Fluoride–Uranium Phosphors . . 5
Electronically Timed Falling-Drop Instrument for the Determination of Densities of Aqueous Solutions 5
Automatic Titrator With Velocity-Servo Control of Titrant Addition 6
Rectifier-Filter for Brown Recorder 6
Dual Dropping-Mercury-Electrode Polarograph 6
Radiochemical Analyses 6
Nuclear Properties 6
Silicon-31 6
Cross sections of iron 6
Instrumental Methods 7
Scintillation spectrometer 7
Analyses of Thorex solutions by gamma spectrometry 7
Analysis of Radioisotopes 7
Determination of radiotin in radioantimony products 7
Impurities in radioisotope products 7
New and unusual radioisotopes 7
Assay of phosphorus-32 7
Cyclotron Research 8
Identification of Radioelements 9

[redacted]

[redacted]

Distribution of radioelements in a qualitative analysis scheme 9
Ion Exchange and Chromatography 9
Ion-exchange separations; organic and inorganic complexing agents 9
Separations by electromigration on paper 10
Miscellaneous Activities 10
Recovery and purification of uranium from graphite 10
Determination of uranium by absorption of x rays from *K*-capturers 10
Activation Analyses 11
Determination of Chloride in Rat Fat 11
Determination of Iodine in Biological Materials 11
Determination of Traces of Elements in Aluminum 12
Determination of Uranium in Lignite Ores 12
Determination of Traces of Elements in Grass and Grain 12
Determination of the Alkali Metals 12
Use of Fast-Neutron Reactions in Activation Analyses 12
Use of Radioactivation Analysis as a Qualitative or Semiquantitative Analytical Method 13
Use of Autoradiography in Activation Analysis 13
New Applications of Activation Analysis 13
Spectrochemical Analyses 13
Inorganic Preparations 14
Special Preparations 14
Phosphors 15
Optical and Electron Microscopy 16
Corrosion Studies 16
Qualitative Analysis by Electron Diffraction and Microscopy 16
Particle-Size Studies 16
Metallographic, Photomicrographic, and Surface Studies 16
Autoradiography 16
Modifications to Electron Microscopes 17
ORNL Master Analytical Manual 17

SERVICE ANALYSES 18
Ionic Analyses 18
Radiochemical Analyses 18
Activation Analyses 18
General Analysis Laboratory 18
Ion-Exchange Separation and Determination of Sulfate 18
Analysis of Organic Liquids 20
Determination of Microgram Amounts of Cobalt in the Presence of Gram Amounts of Nickel 20
Determination of Microgram Amounts of Tungsten and Platinum in the Presence of 30 to 300 mg of Uranium 20
Determination of Dibutyl Phosphate in the Presence of Tributyl Phosphate 20

[redacted]

[redacted]

Radioisotope Production Analysis 21
Barium-140 21
Scintillation Counter 21
Carbon-14 21
Paper Chromatography 21
Chromium-Versene Complex 21
Sulfur-35–Phosphorus-32 Separation on Resin 21
General Radiochemical Analyes 21
Laboratory and Semi-Works Control Group 22
Hot Pilot Plant Control Laboratory 22
Isolation Analyses 22
HRE Analyses 22
Nickel in HRE fuel 22
Nitrogen compounds in HRE fuel 23

ANALYTICAL CHEMISTRY DIVISION – Y-12 SITE

RESEARCH AND DEVELOPMENT 25
ANP Analytical Laboratory 25
Raw Materials Analytical Laboratory 25
Determination of Carbon in Organo-Phosphorus Compounds 25
Determination of Active Hydrogen in Secondary Amines 25
Effect of Impurities in Diethyl Ether on Its Extraction of Uranium 25
Amperometric Determination of Phosphate in Acidic Solutions of Uranium Phosphate 26
Homogeneous Reactor Program 26
Analysis of Materials Used in Preparation of Thorium Oxide Slurries 26
Thorium nitrate 26
Thoriumoxide 26
Analysis of Slurries 26
Slurries of uranium compounds 27
Slurries of thoriumoxide 28
Analysis of Uranyl Sulfate Solutions 28
Analysis of Corrosion Products from Stainless Steel 29
Analysis of aluminumnitrate solutions 29
Quality Control 29

SERVICE ANALYSES 30
ANP Analytical Laboratory 30
Raw Materials Analytical Laboratory 30
HRP Analytical Laboratory 31
Miscellaneous Analysis Laboratory 31

[redacted]

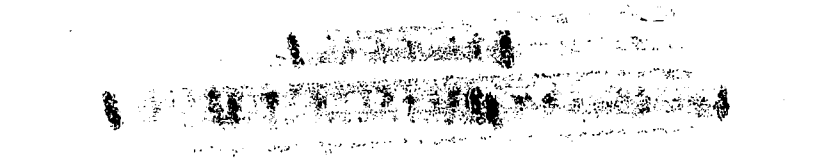

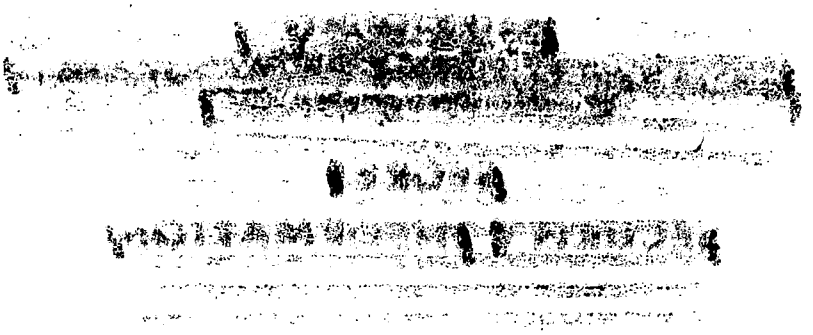

[redacted]

ABSTRACT

ANALYTICAL CHEMISTRY DIVISION – X-10 SITE

Research in the field of ionic analyses has resulted in the development of polarographic methods for the determination of europium in lithium iodide crystals and for the simultaneous determination of nickel and manganese in HRE fuel solution. Preliminary results of methods for the analysis of samples from the distillation and dissolution steps of the Chlorine Trifluoride process are given. A procedure is described for the determination of iron, chromium, and nickel in 50-mg samples of stainless steel. A few revisions to the method for the simultaneous colorimetric determination of copper, cobalt, and nickel are noted. Modifications to the apparatus for vacuum-fusion analysis were made; new uses of the technique are mentioned.

New developments and applications of analytical instrumentations are reported. The laboratory-model oscillator (LMO) has been used to obtain fundamental information which is being applied to certain radio-frequency analysis problems. Four electronic units have been built for the automatically recording, internal-standard, flame photometer. They are stable and the ratio-circuit output is linear. Work on the monochromators is reported. An infrared, image-converter tube is being evaluated relative to type 6217 and selected type 1P22 photomultipliers for flame photometry at a wavelength of 768 mμ. A special regulated-current power supply for a coulometric, Karl Fischer, water titrator has been built. This power supply electronically maintains the titration medium, which drifts chemically, at the end-point condition. A diaphragm-type pipet manipulator, designed to minimize the amount of entrapped air, has been put into service. Remotely controlled use of this manipulator permits delivery of liquids from 1- to 10-ml pipets with precision as good as that obtained by hand control. A radio-frequency fusion apparatus for the preparation of sodium fluoride–uranium phosphors has been built and has been used to find improved methods of preparing the phosphors. A new electronically timed falling-drop instrument for the determination of densities of aqueous solutions has been built and is being evaluated; satisfactory precision has been attained. An automatic titrator that will have velocity-servo control is being built. The rate of delivery of the titrant will automatically adjust to the requirements of the titration in that titrant will be delivered automatically up to the end point, and the addition rate is controlled by the chemical titration reaction. A rectifier-filter has been built for a Brown recorder that is in use on a microphotometer. The performance of the microphotometer is more satisfactory than it was with the original unit. A new dual dropping-mercury-electrode polarograph has been built that can be used for regular, differential (curve-follower), and derivative polarography.

Neutron cross sections of silicon and iron and some radioactive properties of Si^{31} are reported. Progress has been made in calibration and application of the scintillation spectrometer. In the field of radioisotope analysis, methods of assay of products and of determination of impurities are discussed. Research in which the Y-12 cyclotron was used has yielded information on several hitherto unknown rare-earth radionuclides. The distribution of radioelements in a qualitative analysis scheme has been investigated. Separations of rare earths by ion exchange and of radioisotope impurities by electromigration have been further studied. The separation and decontamination of uranium from a neutron-bombarded uranium-graphite mixture is reported. Progress has been made in determining uranium by absorption of x rays from *K*-capture in Cd^{109}.

The application of neutron-activation analysis to the determination of trace quantities of elements in

[redacted]

[redacted]

biological materials, aluminum, lignite, grass, and grain is reported. In addition, the special techniques of using fast-neutron reactions, ion exchange, and autoradiography in conjunction with activation analysis are discussed briefly.

Spectrochemical work on the determination of boron in carbon and graphite has been directed toward improved precision. The Harvey semiquantitative procedure has been put into use for some determinations. The Spectrographic Laboratory has taken part in a cooperative standardization of three experimental batches of Eastman Kodak Company spectrographic emulsions. A Boltzmann distribution of rotational velocities has been shown to exist in the R_2 branch of the (0,0) emission band of the OH molecule in porous-cup discharges under certain power-source conditions. The temperatures of discharges in typical solutions have been measured. It has been found that alkali metal samples can be prepared for spectrographic analysis, without gain or loss of trace impurities, by heating the sample in a mixture of air and CO_2; the sample is thus converted to Na_2CO_3. New analytical curves for six metals have been established.

Preparations of new inorganic compounds included V_3Si, Mo_3Si, Cr_3Si, and LiN_3. Also, $FeCl_3$ and Cs_2O were prepared. These were made relative to the work of the Physics and Chemistry Divisions. Six new phosphors, all compounds of lithium, were made for the Physics Division.

Optical and electron microscopy studies included examination of oxide films and corrosion products of interest to the HR and ANP projects and to the Reactor Experimental Engineering, Reactor Technology, and Chemistry Divisions; particle-size determinations on a wide variety of powdered samples; metallographic and surface studies of target-metal materials, metals exposed in HRP test loops, and steels that contained coarse and nodular pearlite; autoradiography of zirconium-coated tungsten exposed to tritium; and irradiated ceramic sections of spark plugs. Mention is made of changes and additions to the RCA and Philips electron microscopes.

A status summary is given of the work on the *ORNL Master Analytical Manual*, the initial copies of which were issued on July 29.

Analytical service analyses are summarized in tabular form; special problems are discussed briefly. Also, a summary is included that indicates the extent of interest in and use of activation-analysis services.

ANALYTICAL CHEMISTRY DIVISION – Y-12 SITE

Analytical work pertaining to the ANP program was confined to four major studies: (1) the application of differential spectrophotometry to the determination of zirconium in ARE fuels; (2) the separation and determination of chromium metal and chromium trifluoride in the ARE fuel solvent; (3) the separation and determination of UF_3 and UF_4 in $NaZrF_5$; and (4) the determination of oxygen in metallic oxides by use of bromine trifluoride.

Problems relative to the Raw Materials program included a study of the effect of impurities in diethyl ether on its extraction characteristics for uranium. A modified wet-combustion method for the determination of carbon in organo-phosphorus compounds was studied. Initial tests were made of a method for the determination of the concentration of secondary amines in the presence of tertiary amines. The reactions of lithium aluminum hydride and methyl magnesium bromide to liberate the active hydrogen from the secondary amines are being investigated for this purpose.

In analytical studies for the HRP, a sampling device for obtaining uniform and convenient analytical samples of slurries was tested, and an improved separation of slurry phases was attained by high-speed centrifugation. Suitable volumetric and colorimetric methods have been adapted for determining magnesium, sulfate, and sulfite in both phases of uranium oxide slurries. A sensitive spectrophotometric titration of uranium(IV) in the

[redacted]

[redacted]

presence of high concentrations of uranium(VI) was developed. A study of the colorimetric determination of thorium in which chloranilic acid was used has been completed.

Methods were developed for the determination of microgram amounts of compounds of zirconium, cerium, ruthenium, and iodine in uranyl salt solution.

Work was initiated to study the precision and accuracy of modified colorimetric methods for the analysis of milligram quantities of stainless steel films and corrosion scales.

A review and tabulated summary of the quality control data for the period is presented.

A tabulation of analytical service, indicating the distribution among divisions, is included. More than 85% of the analytical service was carried out for the REED and Materials Chemistry Division. A total of 65,913 determinations was reported.

[redacted]

[redacted]

PUBLICATIONS

1. W. A. Brooksbank and E. J. Fuller, *Radioactivity of Dissolver Gas*, ORNL-1064 (Aug. 7, 1953).
2. J. M. Chilton, "Simultaneous Colorimetric Determination of Copper, Cobalt, and Nickel as Diethyldithiocarbamates," *Anal. Chem.* **25**, 1274 (1953).
3. B. L. Cohen, E. Newman, T. H. Handley, and A. Timnick, "Angular Distribution of Deuterons from $Be^9(p,d)Be^8$," *Phys. Rev.* **90**, 323 (1953).
4. W. J. Frierson, P. F. Thomason, and H. P. Raaen, *Elution Chromatography with Thick Filter Paper*, ORNL-1549 (May 27, 1953).
5. T. H. Handley and E. L. Olson, "Dysprosium-157," *Phys. Rev.* **90**, 500 (1953).
6. A. D. Horton, "Spectrophotometric Determination of Zirconium," *Anal. Chem.* **25**, 1331 (1953).
7. B. Kahn and W. S. Lyon, "Decay of K^{42}," *Phys. Rev.* **91**, 1212 (1953).
8. G. W. Leddicotte and S. A. Reynolds, *Neutron Activation Analysis: A Useful Analytical Method for Determination of Trace Elements*, ORNL-1443 (February 7, 1953) (not previously reported).
9. G. W. Leddicotte and S. A. Reynolds, *Determination of The Alkali Metals by Neutron Activation Analysis*, ORNL-1623 (in press).
10. W. S. Lyon, "Neutron Capture Cross Sections for Production of Sc^{46} and Sr^{85}," *Phys. Rev.* **89**, 1307 (1953).
11. H. A. Mahlman and G. W. Leddicotte, *The Determination of Trace Amounts of Uranium by Neutron Activation Analysis*, ORNL-1590 (August 24, 1953).
12. D. L. Manning and J. C. White, *An Indirect Colorimetric Method for the Determination of Uranium*, ORNL-1476 (Jan. 13, 1953).
13. D. L. Manning and J. C. White, *The Determination of Traces of Hydrogen Fluoride in Inert Gases*, ORNL-1538 (April 10, 1953).
14. S. A. Reynolds, *Studies on the Electrolytic Separation and Determination of Tin, Antimony, and Bismuth with Controlled Cathode Potential*, ORNL-1557 (June 19, 1953).
15. S. A. Reynolds, G. W. Leddicotte, and H. A. Mahlman, "Gamma-Radiation from Arsenic-77," *Phys. Rev.* **91**, 333 (1953).
16. W. J. Ross and J. C. White, *A Method for the Determination of Water in Fluoride Salts*, ORNL-1618 (Sept. 8, 1953).
17. J. C. White, C. K. Talbott, and L. J. Brady, *Dissolution of NaK*, ORNL-1453 (Dec. 2, 1952).
18. *ORNL Master Analytical Manual*, first copies issued July 29, 1953.

[redacted]

ANALYTICAL CHEMISTRY DIVISION - X-10 SITE

RESEARCH AND DEVELOPMENT

IONIC ANALYSES

P. F. Thomason

Simultaneous Determination of Nickel and Manganese in HRE Solutions

M. T. Kelley P. F. Thomason
A. D. Horton

The polarographic method for nickel[1] has been extended to include the determination of manganese. Nickel and manganese have been separated from uranium in HRE fuel solution by ion exchange in a column of chloride-form Dowex-A1 resin, and they have been determined simultaneously by polarography in NH_4Cl-NH_4OH electrolyte. The relative standard deviation of this method is 5.7% at a concentration of 10 μg of nickel per milliliter and 7.8% at a concentration of 2.0 μg of manganese per milliliter.

Nickel and manganese have also been separated from uranium in HRE fuel solution by ion exchange in a column of sulfate-form Dowex-A1 resin, and they have been determined simultaneously by polarography in $(NH_4)_2SO_4$-NH_4OH electrolyte. The relative standard deviation for this method is 5.5% at a concentration of 2.0 μg of nickel per milliliter and 4.0% at a concentration of 2.0 μg of manganese per milliliter. These methods will be described in a forthcoming topical report.

Simultaneous Colorimetric Determination of Copper, Cobalt, and Nickel as Diethyldithiocarbamates

J. M. Chilton

Several modifications of the published method for the simultaneous colorimetric determination of copper, cobalt, and nickel[2,3] were devised in order to make the method more applicable to the analysis of radioactive uranyl sulfate solutions by decreasing the volume of sample and the number of extractions required. It was found that the pH of the aqueous layer could be made as low as 4.0 without the efficiency of the extraction being affected, and that one extraction with 5.0 ml of CCl_4 gave approximately twice the sensitivity of the original method. In the modified method, brom cresol green is used instead of phenol red as a pH-indicator, 15% Na_2CO_3 solution instead of NH_4OH, 5.0 ml (pipeted) of CCl_4 instead of four 2-ml portions, and one 3-min extraction instead of four 2-min extractions.

Polarographic Determination of Europium in Lithium Iodide

H. H. Miller

Europium as $EuCl_3$ is of current interest as an activator for lithium iodide crystals used in the scintillation counter. Because it is necessary to know the concentration of europium in the lithium iodide crystals, a polarographic method has been developed for the determination of microgram quantities of europium. An aqueous solution of the crystals is made up to volume in 0.1 *M* NH_4Cl, which is the supporting electrolyte. In this electrolyte, the reaction europium(III) $\longrightarrow$ europium(II) gives a fairly well-defined polarographic wave at an $E_{1/2}$ of approximately –0.67 volt vs. the S.C.E. A concentration of 14 μg of europium(III) per milliliter gives a diffusion current of about 0.5 μa, which is relatively moderate sensitivity. The precision of the method has not been established.

Evaluation of the Model 1338, Series 1, Derivative Polarograph

H. H. Miller

The model 1338, series 1, derivative polarograph designed by Kelley *et al.*[4] has been evaluated. To illustrate the usefulness of the instrument, polarograms of thorium(I), lead(II), cadmium(II), and uranium(VI) were obtained under various conditions. Among the conditions varied were rate and direction of polarization, concentrations of

[1] M. T. Kelley, P. F. Thomason, and A. D. Horton, "Polarographic Determination of Nickel in HRE Solution," *Anal. Chem. Semiann. Prog. Rep. April 20, 1953*, ORNL-1547, p. 1.

[2] J. M. Chilton, "Simultaneous Determination of Copper, Cobalt, and Nickel," *Anal. Chem. Semiann. Prog. Rep. April 20, 1953*, ORNL-1547, p. 1.

[3] J. M. Chilton, "Simultaneous Colorimetric Determination of Copper, Cobalt, and Nickel as Diethyldithiocarbamates," *Anal. Chem.* 25, 1274 (1953).

[4] M. T. Kelley, D. J. Fisher, L. A. Meeks, and J. P. Palmer, "Derivative Polarography: New RC Method," *Anal. Chem. Quar. Prog. Rep. Sept. 26, 1952*, ORNL-1423, p. 1.

ions, and the number of types of ions present. The results will be issued in a topical report.

Development of Analytical Methods Relative to the Chlorine Trifluoride Process

A. D. Horton P. F. Thomason

An investigation has been made to develop suitable methods for analyzing samples from the distillation and dissolution step of the Chlorine Trifluoride process for the conversion of uranium metal to UF_6 by use of ClF_3.

It has been proposed to hydrolyze the gaseous samples, which will contain ClF_3, UF_6, and HF, and to determine total fluoride, chloride, and uranium(VI). The estimated composition of the sample of minimum UF_6 content is 1 wt % UF_6 and a 1:5 mole ratio of HF to ClF_3; the estimated composition of the sample of maximum UF_6 content is 10 mole % UF_6 and a 5:1 mole ratio of HF to ClF_3. On the basis of these estimates, synthetic samples were prepared from NaF, NaCl, and $UO_2(NO_3)_2 \cdot 6H_2O$. The total gas sample weight to be taken for analysis was arbitrarily set at approximately 1 g, and the sample volume of the solution of the hydrolyzed sample was set at 100 milliliters.

Fluoride was determined by a method described by Chilton,[5] in which fluoride is titrated potentiometrically with $KAl(SO_4)_2$ solution. The relative standard deviation of the method for 4.5 to 5.0 mg of fluoride per milliliter is 1.4%.

Uranium(VI) was determined by reduction with chromous potassium sulfate and potentiometric titration with $K_2Cr_2O_7$ solution. The relative standard deviation of the method is 0.9% for 4.5 to 5.0 mg of uranium(VI) per milliliter, and is 2.4% for 60 to 100 μg of uranium(VI) per milliliter.

Chloride was determined by potentiometric titration with $AgNO_3$ solution by use of a method developed by Thomason.[6] The relative standard deviation of this method for 0.55 to 0.60 mg of chloride per milliliter is 0.3%.

The foregoing methods are satisfactory for the determination of total fluoride, uranium(VI), and chloride in samples from the Chlorine Trifluoride process.

[5] J. M. Chilton, "Fluoride, Automatic Potentiometric Titration," *Anal. Chem. Semiann. Prog. Rep. April 20, 1953*, ORNL-1547, p. 1.

[6] P. F. Thomason and M. T. Kelley, *Determination of Chloride in Zirconium Metal*, ORNL-747 (Aug. 3, 1950).

Analysis of 50-mg Samples of Stainless Steel

P. F. Thomason J. M. Chilton

A number of samples of stainless steel, each weighing approximately 50 mg, were received from the Metallurgy Division to be analyzed with maximum accuracy for iron, chromium, and nickel. A procedure for the determination of all three metals in each individual sample was devised; the iron was extracted as ferric chloride with isopropyl ether, the chromium was oxidized to chromium(VI) and titrated with iron(II) solution, and the nickel was precipitated with dimethylglyoxime and the precipitate weighed.

Vacuum-Fusion Analysis of Metals

W. J. Wolkowitz

Several changes were made in the techniques and apparatus used in vacuum-fusion analysis. A glass bulb that contains gold foil has been inserted in the system between the roughing pump and the mercury-diffusion pump in order to entrap mercury vapor. Toxic beryllia has been replaced with a 99% CuO–1% Fe_2O_3 mixture. Because neither graphite powder nor a mixture of graphite powder with $\frac{1}{16}$-in.-dia graphite particles proved satisfactory as an insulator in the high-vacuum system of the vacuum-fusion furnace, a new material was sought that would have the high heat-insulation qualities of graphite. It was found that 10- to 70-mesh ZrO particles were converted to ZrC by heat at 1900°C in the presence of graphite. The ZrC so prepared is now being used experimentally. The original crucible assembly of the vacuum-fusion furnace was such that excessive penetration of molten metal through the graphite necessitated the replacement of the entire crucible assembly after an analysis. A third graphite crucible has been added as the innermost reaction crucible, and this permits the two innermost crucibles to be withdrawn while the third graphite crucible that is adjacent to the insulating layer is left undisturbed.

Continued research evaluation of the vacuum-fusion technique will include the analysis of crystal-bar zirconium by use of baths of 100% iron and of 80% iron–20% tin in order to determine which technique has better reproducibility. In an experiment designed to simulate corrosion loop tests, the recovery of oxygen from reagent-grade PbO will be attempted in the presence of a large

excess of metallic lead. Pure lead will be used as the bath metal, and a weighed amount of PbO that is contained in a nickel crucible will be dropped into it. As part of an interlaboratory check on the method of determining oxygen in molybdenum by vacuum-fusion analysis, oxygen will be determined in a molybdenum sample submitted by the Battelle Memorial Institute.

ANALYTICAL INSTRUMENTATION

D. J. Fisher H. L. Hemphill

Analytical Applications of High-Frequency Oscillators. III. Laboratory-Model Oscillator

T. S. Burkhalter[7]

A study was made of the laboratory-model oscillator (LMO)[8] in terms of its sensitivity- and stability-response to three binary chemical systems as a function of the manner in which the various circuit components are switched and of the type of sensing element used. From this information, certain trends in instrument response were found. In addition, preliminary work with a General Radio type 821-A Twin-T bridge was carried out to study the LMO response obtained with different chemical systems of equal r-f conductivity. The bridge was also used to measure the components of the impedance of a number of coils of different design, with and without solutions in the core, as a function of frequency. An attempt was made to establish, for a band-condenser-type sensing element, a quantitative relation between the conductivity of a solution and instrument response. These results are being applied to several r-f analysis problems.

Development of an Automatically Recording, Internal-Standard, Flame Photometer

M. T. Kelley D. J. Fisher
N. D. Lee

Previous developmental work on the automatically recording, internal-standard, flame photometer has been described.[9] Four electronic units, assigned the model number Q-1457, have been built. The component layout is shown in ORNL photographs Nos. 11343, 11416, 11417, 11418, 11420, and 11425. It is planned to use three of these units in flame photometers. The fourth will be used with an internal-standard, photomultiplier, pickup assembly for the Jarrell-Ash, 21-ft, Wadsworth-mount, spectrograph. It is planned to build a double-beam, spark spectrometer in which this fourth electronic unit will also be used.

It has been found that the long-term (8-hr) electronic stability of the model Q-1457 electronic units with time is limited only by the stability of the photomultipliers. Selected photomultipliers have very little drift over a period of several hours. If the separate members of the photomultiplier pair have similar long-term drift characteristics, the stability of the ratio of the single-beam signals is greater than that of either component single-beam signal.

The ratio-circuit has been tested with two signals from millivolt potentiometers. It has been found to give true ratios of the two input signals.

An internal-standard photomultiplier housing, in which a transmission-type, interference filter is used, has been built and is being evaluated relative to the unit that uses a wedge-type, interference filter. The optical system used in the Perkin-Elmer flame photometer will not be adapted to the internal-standard flame photometer as previously indicated.[9] Two Bausch and Lomb grating monochromators have been ordered, and these monochromators will be evaluated for applications that require a monochromator having greater dispersion than that obtainable with the Beckman model B spectrophotometer. Also, a considerable gain in numerical aperture will be realized.

Three type 6217 photomultipliers have been tested. The first dynode resistor has been adjusted to obtain optimum focusing action, and a Mumetal shield is incorporated in the housing to minimize disturbances caused by external magnetic fields. The type 6217 photomultiplier has been found to have a larger signal-to-noise ratio at a wavelength of 768 mμ than do selected type 1P21 or type 1P22 photomultipliers.

A type CV-148 infrared image-converter tube has been obtained, and a mount that contains the CV-

[7] Research participant from Agricultural and Mechanical College of Texas.

[8] M. T. Kelley, E. B. Wagner, and D. J. Fisher, "Analytical Applications of High-Frequency Oscillators. III. Laboratory Model Oscillator," *Anal. Chem. Semiann. Prog. Rep. April 20, 1953*, ORNL-1547, p. 3.

[9] M. T. Kelley, D. J. Fisher, H. L. Hemphill, N. D. Lee, and C. Feldman, "Development of an Automatically Recording, Internal-Standard, Flame Photometer," *Anal. Chem. Semiann. Prog. Rep. April 20, 1953*, ORNL-1547, p. 4.

148 tube backed by a Mumetal-shielded, type 5819 photomultiplier has been constructed. The assembly is attached to a Beckman model B spectrophotometer, which is being used as sample monochromator. The type CV-148 tube is being evaluated relative to the type 6217 photomultiplier for flame photometry at a wavelength of 768 mμ.

Compensating, Coulometric Power Supply for Karl Fischer Water Titrator

M. T. Kelley

A special power supply was built to meet the requirements of a coulometric method.[10] The supply delivers regulated, constant current at the required level and is line-operated. Because the titration medium drifts chemically, a compensating-current circuit that electronically maintains the titration medium at the end-point condition is included. It is planned to build a power supply of larger regulated-current capacity and to add an anticipatory circuit so that the coulometric titration will proceed automatically to the end point.

Diaphragm-Type Pipet Manipulator

H. L. Hemphill

Conventional semiremote-control pipet manipulators are not satisfactory for use with micropipets. The entrapment of large volumes of air between the manipulator and the pipet makes it difficult to adjust precisely the liquid level in pipets of 1- to 10-μl capacity. A manipulator, shown in Fig. 1, has been constructed that employs a rubber diaphragm as a displacement mechanism and that permits the volume of entrapped air to be kept at a minimum. A hemispherical shell, equipped with a rubber diaphragm, is mounted on the end of a support tube. The pipet holder is attached to the outer side of the shell, and a capillary bore leads through the holder into the inner portion of the shell. The volume of air entrapped in this bore is approximately 10 μl, compared with a volume of 5- to 10-ml often entrapped in conventional manipulators. A hemispherical plunger that is mounted in the support tube and adjacent to the diaphragm presses the diaphragm into the shell. A threaded rod that is attached to the plunger and that extends through a nut on the opposite end of the support tube controls the plunger. When the plunger is advanced to the extreme forward position, the diaphragm is pressed tightly against the inner wall of the shell; thus nearly all air is excluded from the cavity. Retraction of the plunger allows the diaphragm to recede from the wall and to produce suction in the pipet. By use of this manipulator,

[10] ORNL CF-53-7-131 (limited access).

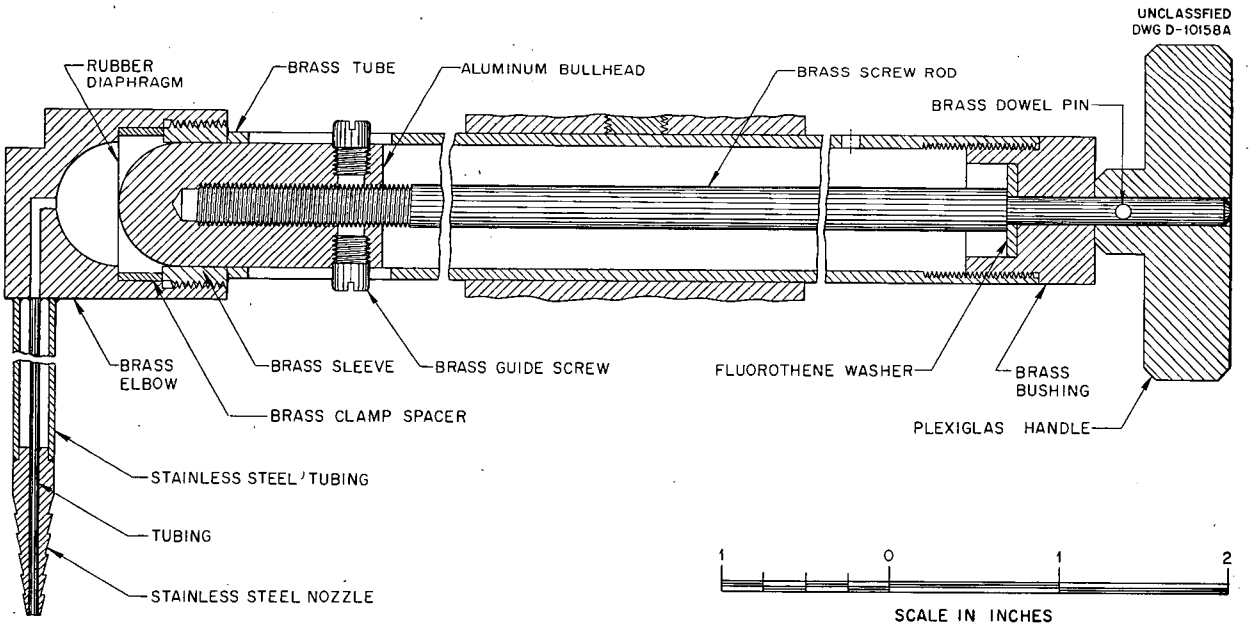

Fig. 1. Diaphragm-Type Pipet Manipulator.

the meniscus in pipets of 1- to 10-μl volume is easily adjusted to the calibration mark with a precision as good as that obtained by use of hand-syringe control, whereas that obtained with conventional manipulators is always inferior.

Radio-Frequency Fusion Apparatus for Preparation of Sodium Fluoride–Uranium Phosphors

H. L. Hemphill N. D. Lee

Methods have been reported[11,12,13] for the determination of uranium by the fusion of the uranium-containing sample with sodium fluoride and the subsequent measurement of the fluorescence of the fused sodium fluoride. The reports deal largely with techniques for irradiating phosphors and for measuring their fluorescence. The apparatus described here was designed for use in the study of the effects on phosphors of fusion temperatures and composition of the atmosphere immediately surrounding the molten phosphors. An RCA, 1-kw power unit that operates at 400 kc is used as the source of r-f current, and a work coil that was designed by N. D. Lee is used to accommodate the platinum fusion dishes in the r-f field. Four phosphors may be prepared simultaneously in about 2 minutes. High fusion temperature, long fusion time, and the presence of oxygen in the atmosphere around the molten phosphor contribute to the solution of platinum by molten sodium fluoride; the solution of platinum in turn decreases the fluorescence. The presence of atmospheric oxygen has a greater influence than the combined effects of the high temperature of fusion (1100 to 1300°C) and long fusion time (1 to 5 min). A cover box mounted over the work coil permits the molten phosphor to be enveloped in an inert gas which excludes oxygen. Of the two inert gases tested, nitrogen and carbon dioxide, the nitrogen proved to be superior. A topical report will be issued that describes the use of the apparatus in fluorometric analyses.

[11] M. T. Kelley, H. L. Hemphill, and D. M. Collier, *An Improved Fluorophotometer for Determination of Uranium in Fused Sodium Fluoride Pellets*, ORNL-1445 (in press).

[12] F. S. Grimaldi, I. May, and M. H. Fletcher, *U. S. Geological Survey, Fluorimetric Methods of Uranium Analysis*, TEI-219 (April 1952).

[13] G. R. Price, R. J. Ferretti, and S. Schwartz, *The Fluorophotometric Determination of Uranium*, ANL-4002 (April 1947).

Electronically Timed Falling-Drop Instrument for the Determination of Densities of Aqueous Solutions

M. T. Kelley N. D. Lee

An instrument for the determination of densities of liquids by the falling-drop method has been described.[14,15,16] This instrument was built for measuring narrow ranges of density with high precision. The instrument described in this report is designed primarily as a more versatile and general-purpose instrument. Design features have been incorporated that minimize the initial cost and increase the versatility of the instrument without sacrifice of precision of measurements. In the instrument, an optical system is employed that consists of a 6-volt exciter lamp, a 2-in.-focal-length lens, and a type 919 phototube to start the recording of the time of drop fall. An identical unit is located 12 in. below the first unit to stop the recording. The fall-tube assembly is enclosed in a water-jacket, and the temperature of the tube is maintained constant by water that circulates from a constant-temperature bath. The glass fall-tubes for the organic liquid are quickly interchangeable; those that are not in use are always maintained at constant temperature. The fall-tube assembly is in a vibration-free mounting. By use of several glass fall-tubes that contain oil density standards, the instrument can be adjusted to cover any desired range of density. Measurements of the time of drop fall have been obtained with the instrument with a relative standard error of ±1% at the 95% confidence level. A servo-mechanism is being constructed that will permit the instrument to be operated entirely by remote control. The remote control feature will facilitate the determination of the densities of highly radioactive liquids.

[14] M. T. Kelley, P. F. Thomason, and W. Pruessner, "Instrumentation for the Determination of Densities of Aqueous Solutions by the Falling-Drop Method," *Anal. Chem. Quar. Prog. Rep. June 26, 1952*, ORNL-1361, p. 8.

[15] M. T. Kelley, P. F. Thomason, and W. Pruessner, "Instrumentation for the Determination of Densities of Aqueous Solutions by the Falling-Drop Method," *Anal. Chem. Quar. Prog. Rep. Sept. 26, 1952*, ORNL-1423, p. 8.

[16] M. T. Kelley, H. L. Hemphill, W. Pruessner, N. D. Lee, and L. Bate, "Precision Instrument for Determination of the Density of Deuterium Oxide by the Falling-Drop Method," *Anal. Chem. Semiann. Prog. Rep. April 20, 1953*, ORNL-1547, p. 2.

Automatic Titrator With Velocity-Servo Control of Titrant Addition

M. T. Kelley N. D. Lee
H. L. Hemphill

An automatic titrator in which a selsyn-servo system is used to control the velocity of titrant-addition is under construction. The selsyn-servo control will replace the variable-speed drive and the magnetic clutch that are now in use with the ORNL model Q-945 automatic titrator.[17] Diminution of emf from indicator electrodes causes a deceleration in titrant addition, and the addition is finally stopped when the titration is complete.

Rectifier-Filter for Brown Recorder

M. T. Kelley

The original rectifier-filter that supplies the output signal for the Brown recorder on the National Spectrographic Laboratories microphotometer that is in use in the Spectrographic Laboratory was replaced by a unit of special design. The microphotometer functions more satisfactorily with the new unit because better filtering has been achieved without the introduction of excess lag. The amplifier of the Brown recorder no longer tends to be saturated by unfiltered hash, and a more stable zero point is attained.

Dual Dropping-Mercury-Electrode Polarograph

D. J. Fisher L. C. Bate[18]
W. L. Maddox[19]

A new dual dropping-mercury-electrode polarograph that can be used for regular, differential, and derivative polarography has been built. This instrument incorporates the quadruple parallel-T RC filter. It is planned to evaluate the instrument as a differential polarograph relative to the high-sensitivity model Q-1160 or the model Q-1338 polarograph with the curve follower. As a derivative polarograph, it will be evaluated relative to the model Q-1338 polarograph and to the methods of derivative polarography studied by the Analytical Instrumentation Group. These methods are the RC network, superimposed alternating voltage, tachometer, servo-driven spiral slidewire with RC network, voltage-amplifier with RC network, and current-amplifier with RC network.

RADIOCHEMICAL ANALYSES

S. A. Reynolds

Nuclear Properties

Silicon-31 (W. S. Lyon). One gamma ray of 1.26-Mev energy was found to accompany 0.07% of the beta disintegrations of Si^{31}. The thermal-neutron atomic-activation cross section of silicon to produce Si^{31} was observed to be 2.9 ± 0.3 millibarns. A detailed report on this work will be submitted for publication in *The Physical Review*.

Cross Sections of Iron (S. A. Reynolds). The thermal-neutron activation cross section of Fe^{58} for production of 45-d Fe^{59} has been reported to be about 0.9 barn.[20,21] Leddicotte obtained a value of 0.97 barn by bombarding highly purified ferric oxide, determining the Fe^{59} activity by absolute beta counting, and measuring the neutron flux by cobalt activation.[22] In the present investigation, pure electrolytic iron wire was bombarded, and the iron activity was carefully purified chemically. The Fe^{59} gamma activity was measured by means of a calibrated ionization chamber, and the neutron flux was again determined by cobalt activation. The cross-section value obtained was 0.99 barn.

After the verification of the activation cross section of Fe^{58}, the inconsistency between the activation value and the capture value of Pomerance,[23] 2.5 barns, was confirmed. It may be that Pomerance's value is in error, for he quotes a large uncertainty. On the other hand, the existence of an isomer of Fe^{59} could account for the 1.5-barn difference between the capture and activation

[17] M. T. Kelley, J. L. Horton, J. R. Tallackson, and F. J. Miller, "An Automatic Recording Titrator for Micro and Macrotitrations," *Proceedings of the Instrument Society of America* 7, 63 (1952).

[18] ADP Control Laboratory.

[19] HRE Analyses Group.

[20] R. T. Overman, L. M. Fry, J. W. Jones, W. D. Baldwin, E. Lamb, and J. E. Savolainen, *Descriptive Manual of Radioisotopes Produced by Neutron Bombardment in the Clinton Pile*, ORNL-4 (April 5, 1948), p. 40.

[21] J. A. Swartout, "Radiochemical Studies with Iron," *Report of the Chemistry Division for the Month of November 15 – December 15, 1946*, MonN-229 (Jan. 7, 1947, p. 5.

[22] G. W. Leddicotte, personal communication to S. A. Reynolds (Aug. 1953).

[23] H. S. Pomerance, *Thermal Neutron Capture Cross Sections of Isotopes*, ORNL-1304 (June 6, 1952), p. 6.

values. A search for such an isomer has been made without success. If the isomer exists, its half life must be very short, a few minutes at most.

The cross section of Fe^{56} for the (n,p) reaction to produce Mn^{56} was found to be about 0.05 millibarn for pile neutrons, or about 1 millibarn for epi-cadmium reactor neutrons (energy above ~0.2 ev).

The investigation will be reported in detail in a topical report.

Instrumental Methods

Scintillation Spectrometer (W. S. Lyon, B. Kahn[24]). The energy-vs.-efficiency calibration of the gamma-ray spectrometer, the detection unit of which is a thallium-activated sodium iodide crystal, has been completed. This work will be reported in the November issue of *Nucleonics*. A linear count-rate meter and Brown recorder have been received and are now being used in conjunction with the spectrometer.

Analyses of Thorex Solutions by Gamma Spectrometry (H. W. Wright). The possibility of direct analysis of Thorex solutions for fission products and protactinium by means of the gamma-ray spectrometer is being studied. The instrument has proven satisfactory for comparative analyses of Thorex solutions for protactinium and zirconium-niobium mixtures. Although it is impossible to resolve each component of the zirconium-niobium mixture, the total activity of the two can be determined easily and is a result that is acceptable to the Thorex group. Thus far, the Thorex solutions received for analysis were prepared by dissolving irradiated thorium metal that was more than six months old. The solutions were therefore devoid of the shorter-lived fission products, which complicate the gamma spectrum; the effects of the fission products on the method of analysis are under current investigation.

Analysis of Radioisotopes

Determination of Radiotin in Radioantimony Products (D. J. Coombe). Tin-113 is the most common contaminant in Sb^{125} products. It was found that isopropyl ether extracted pentavalent antimony quantitatively from macro amounts of tin in 6 *N* HCl. The sample that contained carrier amounts (milligram) of inactive tin and antimony plus Sb^{125} tracer was carefully evaporated to fumes after the addition of 1 ml of 36 *N* H_2SO_4. This procedure destroyed any complexing agents that might have interfered with the interaction between the active carrier and antimony. The solution was then carefully diluted to a 10-ml volume to give a solution 6 *N* in HCl. The antimony was oxidized with ceric sulfate and was extracted with two 10-ml portions of isopropyl ether. The ether fractions were discarded, and the aqueous fraction was diluted to a 30-ml volume with distilled water. The tin was precipitated from a cold solution with cupferron, filtered off, and ignited to SnO_2. After the correction for tin yield had been made, there was less than 1% of the added Sb^{125} in the separated tin. This method of separation gives a tin yield of 90 to 95%.

Impurities in Radioisotope Products (W. S. Lyon). The program of examination of radioisotope products for small amounts of radioactive contaminants has continued.[25] The presence of extremely small amounts (less than 0.1%) of Y^{88} in Be^7 products is of more than routine interest. The Y^{88} is presumably formed by a (p,n) reaction on a strontium impurity in the target. Small amounts of Cd^{109}, plus possibly an unidentified cadmium activity, have been found in one Ag^{110} product. In collaboration with G. W. Smith, the nuclide region Pd-Ag-Cd is being investigated in order to determine why some silver products contain this cadmium impurity. Current work consists of the determination of cross sections for the production of Cd^{109}, the establishment of any activity other than Cd^{109} and half-life measurements on samples of irradiated cadmium.

New and Unusual Radioisotopes (W. S. Lyon). Considerable time has been spent in examination of new and unusual radionuclides produced by the ORNL Operations Division. These included I^{130}, Ba^{133}, Eu^{152}-Eu^{154} mixtures, and Y^{88}, and the gamma radiations of each were examined by use of the gamma-ray spectrometer; in addition, some decay-scheme work has been undertaken in which 4π- and coincidence-counting were used.

Assay of Phosphorus-32 (W. S. Lyon). The most recent NBS P^{32} standard was assayed by 4π-counting, with a result of 1.14×10^5 dps/milliliter.

[24] Health Physics Division.

[25] W. S. Lyon, "Examination of Radioisotope Products for Gamma-Emitting Contaminants," *Anal. Chem. Quar. Prog. Rep. Jan. 10, 1953*, ORNL-1474, p. 18.

E. I. Wyatt[26] reports 1.11×10^5 dps/ml by absolute beta counting. The NBS value was given as 1.14×10^5, with an accuracy of ±3%.

Cyclotron Research

T. H. Handley

Assistance has been given to the Electronuclear Research Division in the performance of the radiochemical phases of physics research problems such as yield distribution in proton fission of natural uranium and uranium enriched in U^{235}, (p,pn) and (p,α) excitation functions, angular distribution of deuterons from the reaction[27] $Be^9(p,d)Be^8$, experimental search for a stable dineutron,[28] possible fission in elements of medium atomic weight by bombardment with protons, and experimental studies of (p,t) reactions.[29] Some phases of these topics have been completed and the results have been submitted to *The Physical Review* for publication. As other phases are completed, it is expected that they will also be submitted for publication.

Several unreported radionuclides of the rare earths have been identified, and their nuclear properties have been studied. These radionuclides were produced by bombarding highly purified oxides of the rare earths with protons. Separations were then made by ion-exchange methods similar to those developed by Ketelle and Boyd.[30] As the experiments are completed, the results will be submitted for publication in *The Physical Review*. Table 1 gives some results of these studies.

[26] Radioisotope Production Analyses Group.

[27] B. L. Cohen, E. Newman, T. H. Handley, and A. Timnick, "Angular Distribution of Deuterons from $Be^9(p,d)Be^8$," *Phys. Rev.* 90, 323 (1953).

[28] B. L. Cohen and T. H. Handley, "Experimental Search for a Stable Dineutron," accepted for publication in the Oct. 1 issue of *Phys. Rev.*

[29] B. L. Cohen and T. H. Handley, "Experimental Studies of (p,t) Reactions," accepted for publication in *Phys. Rev.*

[30] B. H. Ketelle and G. E. Boyd, "The Exchange Absorption of Ions from Aqueous Solutions by Organic Zeolites. IV. The Separation of the Yttrium Group Rare Earths," *J. Am. Chem. Soc.* 69, 2800 (1947).

TABLE 1. PROPERTIES OF NEW RARE-EARTH RADIONUCLIDES

ISOTOPE	HALF LIFE	RADIATION	METHOD OF PRODUCTION	METHOD OF IDENTIFICATION
Er^{163}	75 m*	X ray; 0.430- and 1.10-Mev gamma rays	$Ho^{165}(p,3n)Er^{163}$	Excitation function
Tm^{165}	24.5 h*	X ray; 0.205-, 0.808-, 1.16-, and 1.38-Mev gamma rays	$Er^{166}(p,2n)Tm^{165}$ or $Er^{167}(p,3n)Tm^{165}$	Parent of 10-h Er^{165}
Er^{161}	3.6 h	X ray; 0.184-, 0.823-, and 1.10-Mev gamma rays	$Er^{162}(p,pn)Er^{161}$ or $Er^{162}(p,2n)Tm^{161}$ with decay to Er^{161}	Not produced by p on Ho or by (n,γ) on Er
Ho^{161}	2.5 h	X ray and 0.090-Mev gamma ray	Proton bombardment of Er followed by decay of Er^{161} to Ho^{161}, or $Dy(p,n)Ho^{161}$	Daughter of Er^{161}, followed by "milking" of Er^{161} to obtain Ho^{161}
Yb^{167}	18.5 m	X ray and 0.118-Mev gamma ray	$Tm^{169}(p,3n)Yb^{167}$	Excitation function and parent of Tm^{167}

*T. H. Handley and E. L. Olson, "Erbium[163] and Thulium[165]," accepted for publication in the Nov. 1 issue of *Phys. Rev.*

Identification of Radioelements

Distribution of Radioelements in a Qualitative Analysis Scheme (M. M. Vick[31]). Group carriers were used to make measurements to determine the distribution of trace materials in the qualitative analysis scheme of West *et al.*[32] Approximately 50 μl of stock tracer solutions was used. The tracer solutions were obtained either from the Operations Division or by bombardment of suitable materials in the reactor. The actual concentration of each element was not determined. The active material was added to the combined carriers, the solution diluted to 10 ml, and the analysis made according to Kenner's[33] macromodification of the nonsulfide scheme of West *et al.* The results are shown in Table 2.

The large number of ions carried by the basic benzoate group indicates that two carriers, for example, Fe^{+++} and Sb^{+++}, could very well be used to divide this group. Further details will be given in a separate report.

Ion Exchange and Chromatography

G. W. Smith

Ion-Exchange Separations: Organic and Inorganic Complexing Agents. In order to fix more closely the conditions for the ion-exchange separation of the cerium group of rare earths according to established techniques,[34] different pH values of the ammonium citrate elutriant and various resin-column lengths were tried. It was found that at 25°C separations would require a 100-cm-long by 0.20-cm^2-area column of 120- to 170-mesh Dowex-50 resin, pH values of the ammonium citrate solution between 2.90 and 3.05, and elution time of about one week.

Because of large differences among the EDTA[35]-rare earth stability constants,[36] there seemed to be a good possibility of obtaining greatly improved separations by cation exchange, by using EDTA as complexing agent, over those obtained with citrate solutions. Distribution experiments, carried out according to the technique of Tompkins and Mayer,[37] were made by shaking Pm^{147}, $Eu^{152-154}$, and Am^{241} tracers with EDTA solutions of various pH together with Dowex-1 anion-exchange resin. Better separation factors were obtained than were obtained with citrate, although the factors were no

[31] Research participant from Louisiana State University.

[32] P. W. West, M. M. Vick, and A. L. Le Rosen, *Qualitative Analysis and Analytical Chemical Separations*, Macmillian, New York, 1953.

[33] C. T. Kenner (Southern Methodist University), *Macro Modification of the West, Vick, and Le Rosen Scheme of Qualitative Analysis* (unpublished).

[34] G. E. Boyd *et al.*, "The Separation of Rare Earths, Fission Product and Other Metal Ions and Anions by Absorption on Ion-Exchange Resins," a reprint of a series of articles appearing in *J. Am. Chem. Soc.* 69, 2769-2881 (1947).

[35] Ethylenediaminetetraacetic acid, also known by the trade names Versene and Sequestrene.

[36] E. W. Wheelwright, F. H. Spedding, and G. Schwarzenbach, *The Stability of the Rare Earth Complexes with Ethylenediaminetetraacetic Acid*, ISC-279 (Oct. 8, 1952).

[37] E. R. Tompkins and S. W. Mayer, "Ion Exchange as a Separations Method. III. Equilibrium Studies of the Reactions of Rare Earth Complexes with Synthetic Ion Exchange Resins," *J. Am. Chem. Soc.* 69, 2859 (1947).

TABLE 2. DISTRIBUTION OF TRACES OF ELEMENTS IN QUALITATIVE SCHEME OF WEST, VICK, AND LE ROSEN

GROUP	CARRIER	RADIOELEMENTS SEPARATED	
		Elements Recognized To Be Present in the Group Separated	Other Elements Carried to the Extent of 10% or More
HCl	Ag^{+}	Ag, Hg^{+}, Pb	Ir, Ta, I, Sn, Tl
Basic benzoate	Fe^{+++}	Sn^{4+}, Sb, Bi, Fe^{+++}, Al, Cr	Mo, W, Tl, Sc, RE, Pa, Ta, Ru, As, In
Fluoride	Mg^{++}	Mg, Pb, Ba, Sr, Ca	Be
Hydroxide	Co^{++}	Mn, Fe^{++}, Hg^{++}, Cu, Co, Ni, Cd	Zn, Be, Ir, Ru, Cr
Amphoteric	Sn^{4+}	Sn^{++}, As, Zn	Hg, Be
Soluble	Na^{+}	Na, K, Cs	Mo, Sc, Tl, Pd

better than those found with other organic complexing agents.[37] Further experiments with Dowex-50 columns and EDTA complexing agent gave separation factors comparable with those obtained by citrate elution from Dowex-50.

Because anion exchange offered an easier method of separating tin, antimony, and tellurium than did classical methods, studies have been started in which Dowex-2 anion resin and hydrochloric acid solutions are used according to the scheme of Stevenson *et al.*[38] Also, further work with HCl and other complexing agents, including oxalate, is being carried out, especially for the purpose of determining small amounts of tin in Sb^{125} product.

A successful ion-exchange separation[39] of In^{113} daughter from Sn^{113} was made by the use of a 10-cm-long by 0.0384-cm^2-area column of 200- to 230-mesh Dowex-1 resin and with 12 *M* HCl as elutriant. The eluted and purified In^{113} is of interest in the characterization of activities from tin and indium isotopes.

Separations by Electromigration on Paper. Because electromigration of ions on filter paper[40,41] was expected to provide a means of separating ions rapidly and completely, the technique was tried as a method of analysis of radioisotope products. The procedure consists in pipeting microliter portions of solutions of ions onto a strip of thick filter paper that has been saturated with an electrolyte solution. The paper is placed on an insulated, water-cooled, copper block, then covered with a sheet of glass, and the ion spots are made to migrate by means of a potential applied to the ends of the paper by means of platnium-wire electrodes. After 15-min to 1-hr of electrolysis, the ion spots are located by development with spot-testing reagents.

The method proved to be suitable for the separation of radioisotopes when a certain impurity was known to be present and after the bulk of the major constituent was removed by a preliminary separation. An impurity in Ag^{110} that was thought to be Hg^{203} was found to be Cd^{109}, possibly together with another cadmium isotope, when separated by electromigration on paper.

Miscellaneous Activities

Recovery and Purification of Uranium from Graphite (F. L. Moore). Three 2-g samples of graphite impregnated with uranium that was 93%-enriched in U^{235} were submitted for isolation of enough uranium for mass spectrometric analyses. The isolated uranium was required to be sufficiently free of fission products that it would not constitute a radiation hazard. The method used was as follows. Each sample, which consisted of graphite particles ranging in size from that of powder to that of a pea, was boiled in concentrated HNO_3 for approximately 4 hours. The acid extract was boiled down to a volume of approximately 1 ml, and 10 ml of 2 *M* $Al(NO_3)_3$ solution was added. The aqueous phase was cooled and then extracted for 10 min with 20 ml of hexone. The organic phase was scrubbed three times, for 5 min each time, with 20-ml portions of 2 *M* $Al(NO_3)_3$ solution. The uranium was then extracted into 20 ml of distilled water and the above cycle was repeated twice. The activities of the uranium products obtained for mass spectrographic analyses were approximately 2 mr/hr at contact.

Determination of Uranium by Absorption of X Rays from *K*-Capturers (D. J. Coombe, S. A. Reynolds). In an earlier report,[42] the principles of the determination of uranium by absorption of x rays resulting from *K*-capture processes were discussed. The apparatus employed is shown in Fig. 2. The purpose of the beryllium absorber is to stop beta radiation from the source or from the sample. A series of solutions that had various uranium concentrations were prepared from standardized uranyl nitrate stock solutions. X-ray counting rates were measured after the x rays had passed through the solutions and through a blank of 0.5 *N* HNO_3. Because there was gamma radiation from the source, a background count was obtained by inserting enough ruthenium absorber to stop the x rays and to allow the gamma radiation to pass through essentially unchanged. A plot of per cent transmit-

[38] Unpublished work of P. C. Stevenson *et al.*, *Anion Exchange from HCl Solution – General Survey*, California Research and Development Corp., Livermore, California.

[39] K. A. Kraus, F. Nelson, and G. W. Smith, "Anion Exchange Studies. IX. Adsorbability of a Number of Metals in Hydrochloric Acid Solutions," a paper accepted for publication in *J. Phys. Chem.* Also, private communication, F. Nelson to G. W. Smith, Aug. 1953.

[40] K. A. Kraus and G. W. Smith, "Electromigration on Filter Paper," *J. Am. Chem. Soc.* 72, 4329 (1950).

[41] H. H. Strain, "Qualitative Separations by Two-Way and Three-Way Electrochromatography," *Anal. Chem.* 24, 356 (1952).

[42] S. A. Reynolds and D. J. Coombe, "Determination of Uranium in Solution by X-Ray Absorption," *Anal. Chem. Semiann. Prog. Rep. April 20, 1953*, ORNL-1547, p. 8.

tance vs. uranium concentration is shown in Fig. 3. The cuvette used had a path length of approximately 2 cm.

The results indicate that the method would be suitable for the rapid determination of uranium in solution. Further investigation will include a study of the interference of common elements and the allowable activity level in the sample.

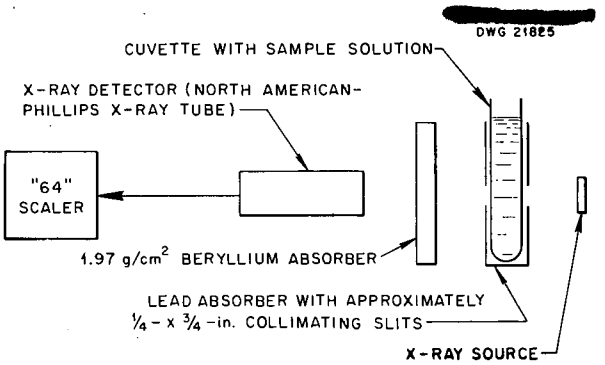

Fig. 2. Schematic Diagram of Apparatus for Determinations by X-ray Absorption.

ACTIVATION ANALYSES

G. W. Leddicotte

Determination of Chloride in Rat Fat

H. A. Mahlman G. W. Leddicotte

Several samples of ether-soluble rat fat were accepted for an exploratory determination of traces of chloride, present as pentachloronitrobenzene, by radioactivation analysis. The determinations were made by reading directly the gamma radioactivities of the samples after irradiation and then following the decay of the activities for approximately 3 hours. This arbitrarily chosen decay time allowed the Cl^{38} ($t_{1/2}$ = 38.5 m) activity to decay beyond detectable limits and the presence of contaminant activities to be shown. The contaminant activities were in amounts small enough not to cause interference in the analysis. Because of the satisfactory nature of the results, the requester submitted 54 additional samples. The determination of chlorine in this group of samples was complicated by the presence of considerable amounts (at least 5% of the total activity) of sodium as Na^{24} ($t_{1/2}$ = 15.0 h). However, it was found that the chloride content could be determined easily by

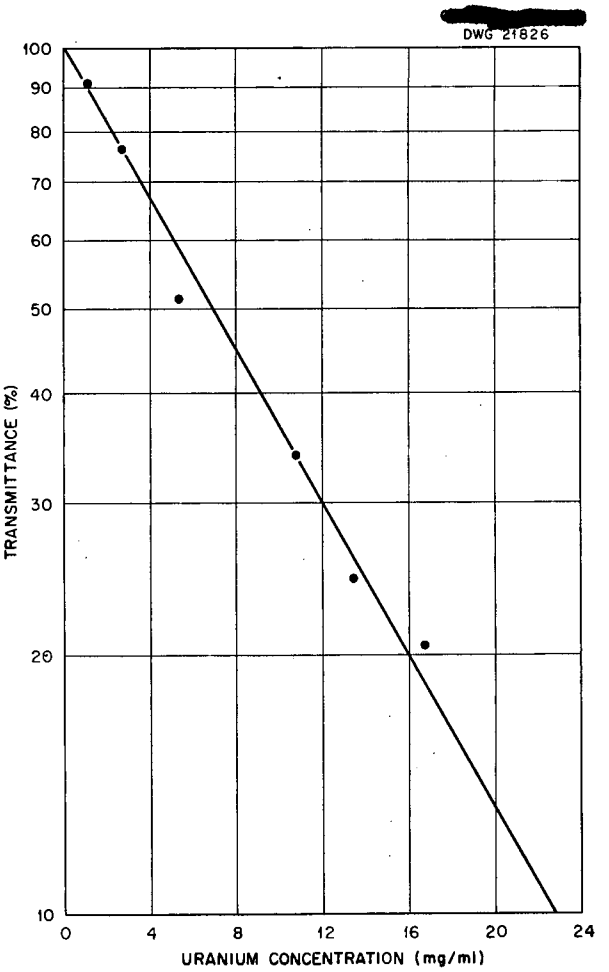

Fig. 3. Transmittance of X Rays as a Function of Uranium Concentration.

two radioactivity measurements of the Cl^{38} and Na^{24} at different times and calculation of the Cl^{38} activity by the use of simultaneous equations.

Determination of Iodine in Biological Materials

H. A. Mahlman G. W. Leddicotte

The nuclear reaction $I^{127}(n,\gamma)I^{128}$ ($t_{1/2}$ = 25.0 m) was used to determine iodine in biological materials. The irradiated samples were processed by a chemical-separation procedure adapted from a method described by Meinke.[43] The sample and a comparative iodine standard were irradiated and processed

[43] W. W. Meinke, *Chemical Procedures Used in Bombardment Work at Berkeley*, UCRL-432 (Aug. 30, 1949), p. 164.

in the same manner. After the I^{128} was separated, the beta radiations from it were counted and the decay was followed for approximately 3.0 hours. In all instances, only iodine radioactivity was detected. The chemical yield of the isotopic carrier was determined after the counting was completed; thus increased sensitivity was achieved. The appropriate calculations were then made by correcting the value for the radioactivity in the separated material for yield and decay.

Determination of Traces of Elements in Aluminum

H. A. Mahlman T. C. Rains
G. W. Leddicotte

Work has continued on the adaptation of radioactivation analysis to the assay of aluminum for traces of cobalt, copper, iron, manganese, silicon, sodium, zinc, and zirconium.

Determination of Uranium in Lignite Ores

H. A. Mahlman G. W. Leddicotte

A number of samples of lignite that contained uranium were obtained from the Materials Chemistry Division for use in evaluating the neutron-activation method of determining uranium. The samples were irradiated in the graphite reactor, ignited in a muffle furnace, and the uranium extracted from the residue with an $HCl\text{-}HNO_3$ mixture. The resulting solution was then analyzed for Np^{239} ($t_{1/2}$ = 2.33 d) radioactivity by the method given in another report.[44] The result of the determination was 30 to 50% greater than that by the conventional fluorophotometric method.[45] Further work with lignites will be undertaken to attempt to determine the cause of this large discrepancy.

Determination of Traces of Elements in Grass and Grain

G. W. Leddicotte H. A. Mahlman

Radioactivation analysis was applied to the determination of trace amounts of cobalt, copper, iron, manganese, molybdenum, strontium, and zinc in rye grass and corn. A topical report concerning these analyses is forthcoming.

Determination of the Alkali Metals

G. W. Leddicotte S. A. Reynolds

Activation analysis has been applied to the determination of trace amounts of sodium, potassium, rubidium, and cesium in a variety of materials. This application and the analytical data obtained are discussed in another report.[46]

Use of Fast-Neutron Reactions in Activation Analysis

H. A. Mahlman G. W. Leddicotte

In order to adapt activation analysis to the determination of trace quantities of as many elements as possible, certain of the fast-neutron reactions that occur in the ORNL reactors are being either utilized routinely or investigated for routine use.

The difficulties in determining trace amounts of sulfur have been reported.[47] In effect, such factors as the length of irradiation time necessary to produce a good sensitivity by the reaction $S^{34}(n,\gamma)S^{35}$, as well as the weakness of the beta radiation (0.167-Mev) that is associated with the S^{35}, limited the usefulness of activation analysis in determining trace amounts of sulfur. It was demonstrated experimentally that the nuclear reaction $S^{32}(n,p)P^{32}$ is feasible and reasonably sensitive for the determination of sulfur. In the course of the experiments, in which cadmium-shielded as well as unshielded samples were used, it was also found that phosphorus and sulfur could be determined simultaneously. The P^{32} in the unshielded sample would be the sum of the products of the slow-neutron reaction on P^{31}, that is, $P^{31}(n,\gamma)P^{32}$, as well as the fast neutron reaction on S^{32}, $S^{32}(n,p)P^{32}$. The P^{32} in the cadmium-shielded sample would be only that produced by the reaction $S^{32}(n,p)P^{32}$. In the chemical processing of the sample, scavenging precipitations and finally a separation of the phosphorus as barium phosphate were used for yield determination. The only interference encountered in these experiments was the

[44] H. A. Mahlman and G. W. Leddicotte, *The Determination of Trace Amounts of Uranium by Neutron Activation Analysis*, ORNL-1590 (Aug. 24, 1953).

[45] Method Nos. 1 219240 and 9 00719240, "Uranium, Fluorometric Method," *ORNL Master Analytical Manual.*

[46] G. W. Leddicotte and S. A. Reynolds, *Determination of the Alkali Metals by Neutron Activation Analysis*, ORNL-1623 (in press).

[47] H. A. Mahlman and G. W. Leddicotte, "Trace Quantities of Sulfur," *Anal. Chem. Semiann. Prog. Rep.* April 20, 1953, ORNL-1547, p. 9.

amount of P^{32} produced by the nuclear reaction $Cl^{35}(n,\alpha)P^{32}$. However, the cross section for this reaction is low and it has been calculated that for the conditions of irradiation, the P^{32} formed by the irradiation of 1 mg of Cl^{35} by the above reaction would be equivalent to 0.03 μg of phosphorus. This method of determining sulfur is now being used routinely in the analysis of a variety of materials for sulfur.

Methods of determining trace amounts of aluminum and magnesium by means of the Na^{24} produced in the fast-neutron reactions $Al^{27}(n,\alpha)Na^{24}$ and $Mg^{24}(n,p)Na^{24}$ are being investigated.

Use of Radioactivation Analysis as a Qualitative or Semiquantitative Analytical Method

H. A. Mahlman G. W. Leddicotte

The sensitivity of radioactivation analysis for the detection of most of the elements has provoked considerable interest in applying this method to the qualitative analysis of a variety of materials. The techniques used include the irradiation of portions of a specimen for various periods of time, usually a few minutes, 16 hr, or 1 week. After the irradiation, the sample is processed either by measuring the radioactivity directly in some type of counting instrument or by measuring the radioactivity in a counter after a chemical separation. In each instance, subsequent identification of the radioactive components is made by decay and absorption measurements.

Of particular interest in this application of activation analysis is the method of chemical separation. Handley[48] has described a precipitation method that divides the elements into five or six major groups. Although this method is reasonably rapid, it does not always allow for a convenient separation of the elements within each group; hence, it is not always useful in completing a qualitative determination by radioactivation analysis. At present, it is used chiefly to indicate the presence of a few elements in a sample that is considered to be ultrapure, for example, the germanium metal used in transistors.

More recently, in an effort to further this particular investigation, a second method of analysis has been considered. By use of the results of an unpublished survey by Stevenson[38] as a guide, it has been possible to develop an analytical scheme that will divide most of the elements into groups that can be further separated either by a precipitation method of the type mentioned above, with subsequent identification by decay and absorption measurements, or by direct decay and absorption measurements. So far, this method of analysis has been used to determine traces of elements in cracking catalysts and spectrographic standards.

Use of Autoradiography in Activation Analysis

G. W. Leddicotte T. C. Rains
T. Willmarth[49]

The desire to find new applications of activation analysis has prompted an investigation of its use in conjunction with autoradiographic techniques for studying such problems as the location and identification of inclusions in metals and migration of elements. Patterned after the technique used by Faraggi *et al.*[50] to determine boron concentrations in boron steels, an investigation of this dual technique is now being made on ceramic and bone specimens.

New Applications of Activation Analysis

G. W. Leddicotte

Inquiries have been received regarding the suitability of the method of activation analysis for the determination of trace quantities of the following elements in the materials indicated: iodine in blood and blood serum; chlorine in vegetable extracts; praseodymium in various solvents; zirconium in catalytic reagents; and trace quantities of elements in the products of dental caries and in bone.

SPECTROCHEMICAL ANALYSES

C. Feldman

J. Y. Ellenburg M. Murray
A. J. Estepp M. K. Wittels

Work has continued on the investigation of the effect of the chemical form of boron in spectrographic electrodes, electrode dimensions, electrode

[48] T. H. Handley, "Qualitative Analysis Scheme," *Anal. Chem. Quar. Prog. Rep. Jan. 10, 1951*, ORNL-955, p. 47.

[49] Optical and Electron Microscopy Group.

[50] H. Faraggi, A. Kohn, and J. Doumerc, "Sur une technique autoradiographique par irradiation neutronique de mise en evidence du constituant bore dans les aciers au bore," *Compt. rend.* 235, No. 14, 714 (1952).

composition, and spectrographic illumination optics on the reproducibility of the intensity ratio B 2497/Ir 2543.

The Applied Research Laboratories 2-meter spectrograph was calibrated to be used according to the Harvey semiquantitative technique.[51] The technique has been applied to the analysis of metallic sodium and Li_2SO_4 for traces of impurities in the parts-per-million range.

The contrast factors and relative speeds of experimental batches of SA1, SA2, and 103-0 films were measured as part of a cooperative program sponsored by the ASTM.

A study of temperature conditions in porous-cup discharges has been initiated. Temperatures are determined by measuring the relative intensities of certain interference-free components of the R_2 branch of the (0,0) band of OH at 3064 Å.[52] The following three results have been found. (1) Thermal equilibrium, at least with regard to the rotational states of the OH molecule, exists in a porous-cup discharge when the electrical power consists of 60 current pulses per second, each pulse approximately 300 μsec in length, and each pulse having a maximum current of about 4.5 amperes. (2) The temperatures given in Table 3 are representative of discharge temperatures that have been measured in National Carbon Company porous cups with flat-bottom cavities and 0.040-in. floor thicknesses and in United Carbon Company beveled-bottom porous cups. It appears at present that electrode geometry, as well as sample composition, has a noticeable effect on discharge temperature. (3) Temperatures of 10% $HClO_4$ discharges measured in helium, argon, carbon dioxide, nitrogen, and oxygen were essentially the same as those given in Table 3. Rollwagen[53] has stated that d-c arcs are hotter in gases of high thermal conductivity (for example, helium) than in air and cooler in gases of low thermal conductivity, but no such effect was found for the present quasi-arc discharge.

A technique has been developed for the preparation, without the use of liquid reagent, of alkali-metal samples for trace-impurity analysis. The sample is transferred to a platinum dish and warmed gently in a slow stream of an air–carbon dioxide mixture. The sample is thus converted to the carbonate without gain or loss of trace impurities.

The new analytical curves listed in Table 4 have been established. In establishing these curves, first consideration was given to the matching of excitation potentials, where possible, rather than to the selecting of a convenient wavelength or to the avoiding of a multiplicity of internal standards.

INORGANIC PREPARATIONS

D. E. LaValle R. H. Sampley

Special Preparations

D. E. LaValle

Three silicides were made for the Nuclear Physics and Neutron Diffraction Group of the Physics Division. The compounds were V_3Si, Mo_3Si, and Cr_3Si, and they were prepared by fusing the component elements in a carbon-arc furnace.

[51] C. E. Harvey, *A Method of Semi-quantitative Spectrographic Analysis*, Applied Research Laboratories, Glendale, California, 1947.

[52] G. H. Dieke and H. M. Crosswhite, *The Ultraviolet Bands of OH, Fundamental Data*, Bumblebee Series Report No. 87, Bureau of Ordnance, U. S. Navy (Nov. 1948).

[53] W. Rollwagen, "Physical Phenomena in the Arc Discharge and Their Significance in Spectrographic Analytical Investigation Methods" (Title translated from the German), *Spectrochim. Acta.* 1, 66 (1939).

TABLE 3. TEMPERATURES OF POROUS-CUP DISCHARGES IN AIR

SOLUTION	TEMPERATURE (°K)	
	National Carbon Co. Flat-Bottom Cups	United Carbon Co. Beveled-Bottom Cups
10% $HClO_4$	4850 ± 25	5025 ± 25
1% $HClO_4$	4706 ± 30	4842 ± 20
1 M KCl	3852 ± 63	4068 ± 75

TABLE 4. NEWLY ESTABLISHED ANALYTICAL CURVES (POROUS-CUP TECHNIQUE)

SUBJECT-ELEMENT LINE		INTERNAL-STANDARD LINE		CONCENTRATION RANGE (μg/ml)
Wavelength (Å)	Excitation Potential (ev)	Wavelength (Å)	Excitation Potential (ev)	
Cu I 3273	3.77	Co I 3462	4.19	0.5 to 10
Ir I 2664	4.63	Co I 3409	4.13	20 to 150
Na I 3303	3.74	V I 3183	3.88	100 to 1600
Pb I 4057	4.36	Co I 3894	3.80	10 to 200
Zn I 3345	7.75	Co I 3044	6.00	25 to 200
Zr II 3273	6.92+3.93	Y II 3216	6.5+3.97	1.5 to 25

A series of attempts was made to produce CrO_2 for the Nuclear Physics and Low-Temperature Group of the Physics Division by the method of Schwartz *et al.*[54] and by that of Akhmedli and Negretov.[55] According to the method of Schwartz *et al.*, CrO_3 is subjected to an oxygen pressure of 900 psi in a closed bomb at temperatures ranging from 440 to 545°C for periods of 0.5 to 1.5 hours. All the products were proven by x-ray analysis to be Cr_2O_3. According to Akhmedli and Negretov, chromium formate is thermally decomposed at 350°C in an inert gas. This product was amorphous and could not be identified by x-ray analysis.

A 100-g quantity of anhydrous lithium azide, LiN_3, was prepared for the High Voltage Experimental program of the Physics Division. The monohydrate was prepared after the method of Hoth and Pyl,[56] and the water was then removed by an ethanol–diethyl ether treatment.

A 50-g quantity of anhydrous $FeCl_3$ was prepared for the Fused Salts Group of the Chemistry Division, and 5 g of Cs_2O was made for the Solid State Group of the same division by a modification of the methods of Rengade[57] and of Brauer.[58] In this modified method, the component elements are directly combined at very low pressures (~2 cm of Hg), and the excess of cesium metal is distilled off.

[54]R. S. Schwartz, I. Fankuchen, and R. Ward, "The Products of Thermal Decomposition of Chromium Trioxide," *J. Am. Chem. Soc.* 74, 1676 (1952).

[55]M. K. Akhmedli and B. P. Negretov, "Products of the Thermal Decomposition of Chromium Formate," *J. Gen. Chem. (U.S.S.R.)* 20, 2045 (1950).

[56]W. Hoth and G. Pyl, "Uber die Darstellung der Stickstoffwasserstoffsaure und ihrer Salze," *Angew. Chem.* 42, 888 (1929).

[57]M. E. Rengade, "Contribution a l'etude des oxydes anhydres des metaus alcalins," *Ann. chim. et phys.* (8) 11, 348 (1907).

[58]G. Brauer, "Untersuchungen uber das System Casium-Sauerstoff," *Z. anor. Chem.* 255, 101 (1947).

Phosphors

R. H. Sampley

The phosphors listed in Table 5 were prepared for the Physics Division. In the preparation of these phosphors, it was necessary to prepare pound quantities of Li_2CO_3, HI, $LiI \cdot 3H_2O$, LiI, BaF_2, $LiBaF_3$, Li_2BaF_4, $LiBaPO_4$, Li_2CaF_4, $LiCaPO_4$, La_2O_3, $LaMnO_3 \cdot CaMnO_3$, $EuCl_3$, $EuCl_2$, and $YbCl_3$; and it was necessary to purify pound quantities of NH_4CO_3, LiCl, HI, $EuCl_3$, $YbCl_3$, and phenyl cyclohexane.

TABLE 5. PHOSPHORS PREPARED FOR THE PHYSICS DIVISION

PHOSPHOR	ACTIVATORS
Li_2BaF_4	Ce, Eu, Yb, Sn, Pb, Sb
Li_2CaF_4	Ce, Eu, Yb, Sn, Pb, Sb
Li_2CaF_4	Ce, Eu, Yb, Sn, Rb, Sb, Bi (H_2 atmosphere, 1000°C)
Li_2BaF_4	Ce, Eu, Tl (H_2 atmosphere, 950°C)
Li_2BaF_3	Ce, Eu, Tl (H_2 atmosphere, 950°C)

OPTICAL AND ELECTRON MICROSCOPY

T. E. Willmarth
F. D. McNeer I. H. Gary

Corrosion Studies

The study of oxide films and layers formed on various metals during exposure to corrosive conditions has been continued. A series of type 304L stainless steel samples that had been heated in an oxidizing atmosphere at temperatures ranging from 800 to 1950°F were studied. Microscopy and electron diffraction results indicated that there is a progressive build-up of a Cr_2O_3 layer on top of a Fe_3O_4 substrate film with increase in temperature. Spectrographic analysis of film residues from these samples showed that the manganese content of the oxide layer also increased with the temperature increase in much the same way as the chromium did; however, the increase in the manganese was less than that of the chromium. Also studied were the oxide films from a series of types 304, 309, 321, and 347 stainless steels that had been heated in a solution of 40 g of UO_2SO_4 per liter at 150°C for 89 hours. The solution was flowing through a corrosion test loop at velocities that ranged from 5 to 66 fps. Examination disclosed that the oxide layers were thickest on those samples that were positioned where the flow velocities in the loop were highest. Electron diffraction results indicated that the oxide films consisted of striated layers containing various amounts of iron or chromium; the films were chiefly Fe_2O_3 or Cr_2O_3 over gamma-Fe_2O_3 or gamma-Fe_3O_4 substrate. Other studies of this nature included the examination of types 304ELC and 347 stainless steel that had been exposed for 100 hr to a solution at 295°C that contained 5 g of UO_2SO_4 per liter and 25 mole % H_2SO_4 and that was flowing through a test loop at velocities of 17 to 77 fps. Inconel that had been exposed to the fluorides of lithium, sodium, and potassium was also examined.

Qualitative Analysis by Electron Diffraction and Microscopy

The following materials were studied by electron diffraction and microscopy for the purpose of identifying their principal chemical constituents; the yellow-green film formed on titanium metal that had been exposed to UO_2SO_4 solution at 250°C in an all-titanium loop; the corrosion products that were scraped from type 309 SNb stainless steel after it was exposed for 1630 hr to an aqueous solution at 106°C that contained primarily $Al(NO_3)_3$ and HNO_3 together with small concentrations of thorium, fluorine, and mercury ions; type 347 stainless steel exposed for 200 hr at temperatures of 200 and 275°C in a solution that contained 40 g of UO_2SO_4 per liter; the surface film found on a 4% Mg–96% Ag alloy; the film formed on aluminum foil in contact with lithium fluoride heated to 560°C; the corrosion products from type 347 stainless steel exposed to a UO_2SO_4 solution that was at 250°C and that contained 22 ppm of oxygen; and the fibers and crystalline material from air filters in Building 4500.

Particle-Size Studies

Particle-size studies were made by optical or electron microscopy on the following: KCl in PDA solution, BN, $UO_3 \cdot H_2O$, UO_3, UF_4, ThO_2 prepared by a variety of methods, calcined ThO_2, and LiCl before and after heating for 30 hr at 110°C.

Metallographic, Photomicrographic, and Surface Studies

The following materials were studied by metallography or photomicrography: type 347 stainless steel that had been abraded by ThO_2; $UO_2(OH)F$; carbon steel that was exposed to UO_2SO_4 solution at 100°C in the presence of $KTcO_4$; cross sections of a type 347 stainless steel bomb that was exposed to a UO_2SO_4 solution containing a low concentration of chloride ion; a cross section of zirconium that was bonded to tungsten by means of an evaporated iron film interface; the surface of a titanium impeller that had been in loop service for 2000 hr; and various samples of stainless steels that were exposed to UO_2SO_4 solutions under many different conditions. Samples of steel that contained coarse and nodular pearlite were studied in the electron microscope by means of replicas.

Autoradiography

Autoradiographs were made of an irradiated sample of zirconium on a tungsten base and of cross sections of the ceramic material cut from spark plugs that had been irradiated in the graphite reactor. The possibility of coordinating the autoradiographic results with those obtained by activation analysis is being studied.

Modifications to Electron Microscopes

An instrumental method was developed for measuring the oscillator potential and the lens current of the diffraction lens-combination in the Philips model EM-100, serial No. 832, electron microscope in order to permit more precise electron diffraction work. The instrument for this purpose was built by the Instrumentation and Controls Division. A control to permit the quick adjustment of voltage in the Philips microscope was also installed. The electron gun on the RCA type B electron microscope was modified to the self-biased type in order to increase electron-beam intensity for electron diffraction. A new type of diffraction holder is being designed for the RCA microscope that will allow the simultaneous insertion of two samples and a standard into the microscope.

ORNL MASTER ANALYTICAL MANUAL

Authors of Methods and H. P. Raaen

The first issues of the *ORNL Master Analytical Manual* were distributed on July 29, 1953. To date, 144 binders are in use; they will contain either complete or partial issues and are either classified or unclassified sections of the manual. Although the content of the manual will undergo constant change by the addition, deletion, and revision of methods, it will be considered to be complete when those methods that are most essential to the Analytical Chemistry Division laboratories have been issued. The status of this work is indicated in Table 6. The maintenance of the manuals is now done routinely; a punched-card system was introduced to facilitate the maintenance.

TABLE 6. APPROXIMATE STATUS OF WORK ON THE *ORNL MASTER ANALYTICAL MANUAL*

SECTION OR SUBSECTION OF THE MANUAL		APPROXIMATE NUMBER OF METHODS		
Number	Title	Scheduled	In Preparation	Issued
0	Editorial	5	0	5
1 000	Ionic, General	*	5	2
1 100	Ionic, Physical	*	2	0
1 200	Ionic, Chemical	*	14	12
2 000	Radiochemical, General	*	3	0
2 100	Radiochemical, Activation Analyses	43	0	0
2 200	Radiochemical, Fission Product Analyses	15	11	2
2 300	Radiochemical, Heavy Elements	10	1	1
3	Spectrochemical	11	0	2
4	Optical and Electron Microscopy	10	0	0
9 000	Process, General	*	**	**
9 010	Process, Thorex	28	19	2
9 020	Process, RaLa	None		
9 040	Process, Plutonium Isolation	27	14	2
9 050	Process, Purex	30	15	8
9 060	Process, Redox	None		
9 070	Process, Radioisotope Production	43	0	43
9 080	Process, HR Project	41	18	1
9 090	Process, ANP Project	33	20	5

*Methods to be included in these sections are written as required.

**Included with the number shown for sec. 1 200.

SERVICE ANALYSES

A semiannual summary of the service analyses made at the X-10 Analytical Chemistry Division laboratories is given in Table 7.

IONIC ANALYSES

P. F. Thomason

The major portion of the service work by the Ionic Research and Development Group consisted of analyses for the Orex process and the HRP experiments. The methods that were used have been discussed previously.[1,2]

The vacuum-fusion technique has been used for the analysis of 96 samples which included titanium, type 347 stainless steel, zirconium, zirconium-hafnium alloy, uranium, and Inconel.

RADIOCHEMICAL ANALYSES

S. A. Reynolds

Most of the analyses (63%) performed by the Radiochemical Analyses Group were for the Electronuclear Research Division. These analyses were radiochemical determinations in connection with the cyclotron research. Analyses of new and unusual radioisotope products were done for the Operations Division. Identification and fission-product and protactinium analyses, primarily by means of the scintillation spectrometer, were done for the Chemical Technology Division. Identification and plutonium analyses made up most of the work for the Health Physics Division.

ACTIVATION ANALYSES

G. W. Leddicotte

The extent of interest that has been shown by the Oak Ridge sites and outside organizations in activation analysis service is summarized in Table 8. The difference in number between the inquiries and the requests for analyses that have been received from outside organizations can be explained in part by the normal time lag required for submission of samples. The following elements were determined routinely in many materials: copper, cobalt, zinc, iron, arsenic, chlorine, iodine, uranium, antimony, manganese, zirconium, sodium, silicon, and tantalum.

GENERAL ANALYSIS LABORATORY

J. H. Edgerton

The ANP and HR Projects required the determination of uranium, zirconium, iron, nickel, chromium, sodium, pH, sulfate, and chloride in eutectic salts and reactor fuels. Remotely controlled equipment is being developed and used in this work because of the high level of radioactivity of the samples.

Preliminary studies were made of the flame photometric determination of cesium, rubidium, and barium in the presence of various amounts of sodium, potassium, calcium, and magnesium. Standard curves were prepared for these three metals, and several samples were analyzed. Detection limits for cesium, rubidium, and barium are not so good as those for other alkali metals and alkaline earths. The lower limit of detection is around 20 ppm. A glass wool–corregated aluminum filter has been installed on the flame photometer for the removal of radioactive particles from the exhaust gases; thus the safe analysis of radioactive samples is permitted. The filter is being tested at the present time.

Numerous separations and analyses were made on thorium, uranium, brazing flux, eutectic salts, alloys, slurries, and reactor fuels for the Chemistry, Physics, Chemical Technology, Solid State, and Metallurgy Divisions and for the ANP and HR Projects.

Ion-Exchange Separation and Determination of Sulfate

J. H. Edgerton L. C. Henley

The Chemistry Division is studying the solubilities of metal oxides in UO_2SO_4 and Ni_2SO_4 solutions. The sulfate contents of samples from these studies were determined in the same manner as that reported previously for the determination of boron;[3] also, the sulfate is being checked by precipitation with $BaCl_2$.

[1] P. F. Thomason, "Ionic Analyses-Development Group," *Anal. Chem. Quar. Prog. Rep. Jan. 10, 1951*, ORNL-955, p. 65.

[2] ORNL CF-53-2-236 (limited access).

[3] J. H. Edgerton and L. C. Henley, "Automotic Potentiometric Microtitration of Boron," *Anal. Chem. Quar. Prog. Rep. Sept. 26, 1952*, ORNL-1423, p. 35.

TABLE 7. SUMMARY OF ANALYTICAL SERVICE WORK AT X-10 SITE FOR THE PERIOD ENDING OCTOBER 1953

	NUMBER OF PERSONNEL		ORNL DIVISIONS REQUESTING ANALYSES															OTHERS REQUESTING ANALYSES			
	TECHNICAL	NONTECHNICAL	ANALYTICAL CHEMISTRY	ANP	BIOLOGY	CHEMICAL TECHNOLOGY	CHEMISTRY	ELECTRONUCLEAR RESEARCH	ENGINEERING AND MAINTENANCE	HEALTH PHYSICS	HRP	METALLURGY	OPERATIONS	PHYSICS	REED	SOLID STATE	STABLE ISOTOPES	K-25	ORSORT	OTHERS	TOTAL DETERMINATIONS
GROUP MAKING ANALYSES			NUMBER OF DETERMINATIONS																		
Activation Analyses*	5	5	1976			1,913	138			98		363	2,277	12				91		88	6,956
ADP Control	10	13				16,121															16,121
General Analyses	5	7		20		1,281	1193		53	84	89	1243	51	14		401					4,429
General Radiochemical	4	4	18		276	8,248	60			720	163		16		85					58	9,644
HRE	3	2									1295										1,295
Ionic Analyses*	6	1	77			258	282					52		2	31	4	4				710
Laboratory and Semi-Works Control	2	8		76		11,915	94					251	67					6			12,409
Optical and Electron Microscopy*	3	1	107	10	5	500	214				30	94	20	13	169	27					1,189
Pilot Plant Control	2	4				7,434					1724										9,158
Plutonium Isolation Laboratory	1	3		424		2,801		34			961										4,220
Radiochemical Analyses*	6	1		11		125		625		79	2		140			7			2	3	994
Radioisotope Production Control	2	15		40		3,504	12			51			10,663	130							14,400
Spectrochemical Analyses*	5	0		4		367	77				32	357	119	57	153	85					1,251
TOTAL	54	64	2178	585	281	54,467	2070	659	53	1032	4296	2360	13,353	228	438	524	4	97	2	149	82,776

*These groups also do research and development work.

TABLE 8. SUMMARY OF ACTIVATION ANALYSIS SERVICES

PERIOD	INQUIRIES FROM OUTSIDE ORGANIZATIONS	REQUESTS FOR ANALYSES	
		From Oak Ridge* Plant Sites	From Outside Organizations
Before April 1, 1953	128	98	42
April 1953	2	5	1
May 1953	5	6	3
June 1953	9	9	5
July 1953	13	7	1
August 1953	10	5	3
September 1953	8	5	2
TOTAL	175	135	57

*Same as number of inquiries.

Analysis of Organic Liquids

J. F. Emery

The Chemical Technology Division requested the determination of the distillation ranges of fluoro-organic liquids; the ASTM procedure was used.[4]

Nitrogen and oxygen in the hydrocarbon diluent "Amsco" were determined for the Chemical Technology Division by the ter Meulen method.[5]

Determination of Microgram Amounts of Cobalt in the Presence of Gram Amounts of Nickel

H. G. Davis

Microgram amounts of cobalt were determined in the presence of gram quantities of nickel by the nitroso-R salt method.[6] The method is based on the instability of the Ni-nitroso-R salt complex and the stability of the Co-nitroso-R salt complex in the presence of HNO_3.

Determination of Microgram Amounts of Tungsten and Platinum in the Presence of 30 to 300 mg of Uranium

J. H. Edgerton H. G. Davis

Tungsten was determined spectrophotometrically in the presence of 30 to 300 mg of uranium per milliliter by the hydroquinone-H_2SO_4 method.[7] Oxidizing agents and large amounts of water must be absent.

The iodide method[8] was used for the spectrophotometric determination of platinum in solutions of UF_4 that contained 30 to 300 mg of uranium per milliliter. Substances that liberate iodine or reduce quadrivalent platinum must be absent. The color is developed for 1 hour.

Determination of Dibutyl Phosphate in the Presence of Tributyl Phosphate

J. H. Edgerton H. G. Davis

Relative to the Waste Metal Recovery project, dibutyl phosphate (DBP) in uranyl nitrate solution that contained tributyl phosphate was determined for the Chemical Technology Division. The determination[9] was made by measuring the disengaging time of the dispersion formed when a fixed amount of solid $ZrO(NO_3)_2$ is added to the solution

[4] "Standard Method of Test for the Distillation of Natural Gasoline," ASTM Designation: D 216-40, ASTM Standards, 1946, Part III-A, p. 161, American Society for Testing Materials, Philadelphia, 1946.

[5] J. Holowchak, G. E. C. Wear, E. L. Galdeschwieler, "Application of ter Meulen Nitrogen Method to Petroleum Fractions," *Anal. Chem.* 24, 1754 (1952).

[6] E. B. Sandell, *Colorimetric Determination of Traces of Metals*, Vol. III, 2d ed., p. 274, Interscience, New York, 1950.

[7] *Ibid.*, p. 587.

[8] *Ibid.*, p. 497.

[9] D. W. Brite, "The Determination of Dibutylphosphate," *Quarterly Progress Report of the Chemistry Unit*, HW-27727 (April 30, 1953), p. 99.

and the solution is shaken with CCl_4. The concentration of DBP was read from a standard curve that was prepared by plotting disengaging time vs. the concentration of DBP in standard DBP solutions that had been treated in the same way.

RADIOISOTOPE PRODUCTION ANALYSIS

E. I. Wyatt

Barium-140. The efficiency of the high-pressure ionization chamber and the counting yield of the gamma scintillation counter in Building 3038 have been determined experimentally for measuring the gamma activity of Ba^{140} and/or La^{140} in Ba^{140}-La^{140} systems. The use of these instruments for determining Ba^{140} is an improvement over the end-window, beta-counting technique. A paper describing the separation techniques and giving pertinent data for the conversion of the measurements to disintegration rates has been prepared and will be submitted for publication in the open literature.

Scintillation Counter. The counting yields of the gamma scintillation counter for a great number of gamma-emitters have been determined through both lead and aluminum absorbers. These yields are recorded in Method No. 9 0733002, "Gross Gamma," of the *ORNL Master Analytical Manual*.

Carbon-14. The NBS, Series A 1949, C^{14} standard has been assayed. The result agreed with the NBS value assigned to it. The working-standard value was obtained by comparison with the value obtained for $BaC^{14}O_3$ originally assayed by Norris[10] in 1949. A summary of all the C^{14} data compiled by the Analytical Chemistry Division is being prepared for publication by S. A. Reynolds.[11]

Paper Chromatography. The paper chromatographic separation of iron and cobalt by upward migration has been studied. The R_f values for cobalt and ferric iron are the same as for downward migration;[12] however, the time required for the separation by upward migration is considerably less than that for downward migration. Ferrous iron has been found to migrate with considerable trailing. A method for the separation is being prepared for the *ORNL Master Analytical Manual*.

Chromium-Versene Complex (R. R. Rickard). A direct determination of chromium(III) in Cr^{51} product solutions was made by use of Versene, the tetrasodium salt of ethylenediaminetetraacetic acid. Chromium(III) forms three complexes with Versene.[13] The violet-colored complex used for analytical purposes is stable between a pH of 3.0 and 7.5, and it shows maximum light absorption at 560 mμ. Iron, nickel, and cobalt do not interfere unless present in amounts equal to or greater than the chromium present. Dowex-A2 ion-exchange resin will strongly adsorb this complex at a pH of 3.0 to 7.5 but will release the complex at a pH below 3.0.

Sulfur-35—Phosphorus-32 Separation on Resin. A new technique, described by McIsaac and Voigt,[14] for separating radiophosphorus from sulfur has been used to determine as little as 0.1% of a S^{35} impurity in radiophosphorus product solutions. A cation-exchange resin, Dowex-50 or Nalcite HCR, is converted to the ferric hydroxide form, which strongly adsorbs phosphate from a weakly acidic solution of phosphate and sulfate. The sulfate has been shown to flow quantitatively through the resin with the 0.1 *N* HCl effluent. The phosphate may be removed from the resin with 0.12 *N* NaOH solution. The use of this type of resin, and possibly other types of converted resins, for the separations of radioactive impurities from a variety of radioisotope product solutions is under further investigation.

General Radiochemical Analyses

C. L. Burros

The major portion of the work done by the Radiochemical Analyses Group was for the Chemical Technology Division relative to the Thorex process studies of the decontamination of thorium from fission products and to the Waste Metal Recovery

[10] L. D. Rorris and M. A. Inghram, "The Half-Life of Carbon 14," *Phys. Rev.* 73, 350 (1948).

[11] S. A. Reynolds and E. I. Wyatt, *Measurement of Activity and Isotopic Abundance of Carbon-14 in Barium Carbonate*, ORNL CF-53-10-104 (in press).

[12] W. J. Frierson and J. W. Jones, "Radioactive Tracers in Paper Partition Chromatography of Inorganic Ions," *Anal. Chem.* 23, 1447 (1951).

[13] G. Schwarzenback and W. Biedermann, "Komplexone IX. Titration von Metallen mit athylendiamintetraessigsaure H_4Y. Endpunktsindikation durch p_H Effekte," *Helv. Chem. Acta.* 31, 459 (1948).

[14] L. D. McIsaac and A. Voigt, *A New Technique for the Separation of Radio-Phosphorus from Sulfur*, ISC-271 (June 1952)

project. The Health Physics Division was assisted in the ecological studies of White Oak Lake and of the extent of contamination of the White Oak Dam and settling basin, and also in their studies of the activity that "fell out" at ORNL on March 19, 1953.

Laboratory and Semi-Works Control Group

L. T. Corbin G. R. Wilson

Fifty per cent of the service work done by the Laboratory and Semi-Works Control Group consisted of analyses relative to the Thorex process. The other work was done for the Waste Metal Recovery project of the Chemical Technology Division and for the HRP. All the methods used are, or will be, included in the *ORNL Master Analytical Manual*.

Hot Pilot Plant Control Laboratory

L. T. Corbin C. E. Lamb

The majority of the samples that were submitted to the Hot Pilot Plant Laboratory were from groups in the Chemical Technology Division assigned to the Waste Metal Recovery project and to the clean-up of the HRE No. 1 fuel. Relative to the former, a method for determining inorganic fluoride[15] was investigated for application to the analysis of concentrated HNO_3 solutions, but the method has not been adopted for control work; also, estimates were made of the concentration of organic matter[16] in aqueous uranium product solutions that contained more than 400 mg of uranium per milliliter.

Isolation Analyses

L. T. Corbin J. H. Cooper

The Isolation Analyses Group continued the routine control and product analyses of plutonium and uranium solutions. The major portion of the work was for the Chemical Technology Division in the purification of HRE No. 1 fuel. A precise method for the determination of sulfate-to-uranium ratios was required. The sulfate was determined by the ion-exchange method described by Day *et al.*[17] Potentiometric titration with ferric sulfate[18] was used for the uranium determination.

HRE Analyses

U. Koskela

Nickel in HRE Fuel (J. C. Howard, U. Koskela). Nickel in the HRE fuel is determined by both colorimetric and polarographic means. The colorimetric[19] method now in use has been scaled down to 4 ml from the recommended final dilution volume of 50 ml, and this requires the use of 1-cm path-length Beckman cuvettes. The entire determination is performed in the cuvettes and behind a barricade. Two standards of different nickel concentration have been analyzed by the modified colorimetric procedure. A standard that contained 150 ppm of nickel was analyzed with a standard deviation of 3.7%; the analysis of a standard that contained 100 ppm of nickel gave a deviation of 3.3%.

Kelley *et al.*[20] described a polarographic nickel determination. By use of their recommended procedure, standards that contained 150 and 100 ppm of nickel gave standard deviations of 2.8 and 4.2%, respectively.

According to Kolthoff and Lingane,[21] nickel has a half-wave potential of −1.02 volt vs. the S.C.E. in a supporting electrolyte that is 1 *M* in NH_4OH and 0.2 *M* in NH_4Cl. Copper and manganese also give well-defined waves in an electrolyte of approximately the same composition at −0.5 volt and at −1.45 volt, respectively, vs. the S.C.E. A modified version of the Kelley method is now being used. The sample is passed through a Dowex-A1

[15] A. D. Horton, P. F. Thomason, and F. J. Miller, "Spectrophotometric Determination of Inorganic Fluoride," *Anal. Chem.* 24, 548 (1952).

[16] C. M. McBride, "Estimation of Organic Matter in Uranyl Nitrate Solutions," in *Process Development Quarterly Report, Part II*, by A. E. Ruehle and J. U. Shepardson, NYO-1354 (April 15, 1953), p. 96.

[17] H. O. Day, J. S. Gill, E. V. Jones, and W. L. Marshall, *A Search for a Reliable Sulfate Analysis of Uranyl Sulfate: The Ion Exchange Method*, ORNL CF-52-2-50 (Feb. 7, 1952).

[18] J. H. Cooper, "Uranium, Potentiometric Ferric Sulfate Method," Method Nos. 1 219222 and 9 00719222 in *ORNL Master Analytical Manual*, ORNL CF-53-1-235, Vol. I or III.

[19] M. L. Druschel, O. Menis, and R. Rowan, Jr., *Modifications of the Dimethylglyoxime Method for the Colorimetric Determination of Nickel Based on the Use of Potassium Persulfate as the Oxidant*, ORNL-1430 (Nov. 3, 1952).

[20] M. T. Kelley, P. F. Thomason, and A. D. Horton, "Polarographic Determination of Nickel in HRE Solution," *Anal. Chem. Semiann. Prog. Rep. April 20, 1953*, ORNL-1547, p. 1.

[21] I. M. Kolthoff and J. J. Lingane, *Polarography*, p. 485, Interscience, New York, 1941.

column; the effluent is collected and evaporated to a small volume. One drop of a dilute phenolphthalein solution is added to the solution in a polarographic cell and enough NH_4OH is added to give a faint, permanent, pink color. The solution is diluted with distilled water to the calibration mark on the polarographic cell. Polarograms of copper, nickel, and manganese are then determined.

Nitrogen Compounds in HRE Fuel (M. J. Gaitanis, C. P. Baker, W. L. Maddox, U. Koskela). In checking both the HRE feed material and the HRE fuel for nitrates, it was discovered that the brown-ring test for nitrate was too insensitive in the presence of uranium. The phenoldisulfonic acid method of Menis[22] has been modified to require that the sample be passed through a Dowex-50 column prior to the addition of the phenoldisulfonic acid. By means of this modification, a decontamination factor of approximately 2 is obtained. However, the radiation hazard is increased considerably when the sample is dried. This method has been used satisfactorily for determining the nitrate content of "eye-dropper" samples of about 0.4-g size. Total nitrogen has been determined by the Kjeldahl-Devarda's alloy method.

The determinations of cyanide and nitrite are now under investigation. Snell and Snell[23] describe a colorimetric determination of cyanide that uses phenolphthalein. This method gave erratic results with synthetic cyanide solutions. The distillation still suggested in the Snell and Snell method has been used to separate cyanide from the sample. The cyanide was then determined with the polarograph.[24] Recoveries of cyanide from synthetic samples have been only about 50%. Further investigations are being planned.

Nitrite can be determined by means of ceric salts.[25] It is proposed to put the sample through an ion-exchange column and to determine the nitrite in the effluent by titration with ceric sulfate by using the ORNL Model Q-945 automatic titrator. This work has just been started.

---

[22] O. Menis, "Determination of Nitrate," *Anal. Chem. Semiann. Prog. Rep. April 20, 1953*, ORNL-1547, p. 18.

[23] F. D. Snell and C. T. Snell, *Colorimetric Methods of Analysis*, 3d ed., Vol. II, p. 856, Van Nostrand, New York, 1949.

[24] I. M. Kolthoff and J. J. Lingane, *op. cit.*, p. 489.

[25] P. Young, "Ceric Salts in Volumetric Analysis," *Anal. Chem.* 24, 152 (1952).

ANALYTICAL CHEMISTRY DIVISION - Y-12 SITE

RESEARCH AND DEVELOPMENT

ANP ANALYTICAL LABORATORY

J. C. White D. L. Manning
J. E. Lee, Jr. W. J. Ross
T. R. Phillips

Four major investigations that pertain to analytical problems for the ANP Project have been made: (1) the application of differential spectrophotometry to the determination of zirconium in ARE fuels; (2) the separation and determination of chromium metal and CrF_3 in ARE fuel solvent, $NaZrF_5$; (3) the separation and determination of UF_3 and UF_4 in $NaZrF_5$; and (4) the determination of oxygen in metallic oxides by means of BrF_3. This work is discussed elsewhere.[1,2]

RAW MATERIALS ANALYTICAL LABORATORY

Determination of Carbon in Organo-Phosphorus Compounds

L. J. Brady

Preliminary studies were made on a modification of the wet-combustion[3] method for the determination of carbon in organo-phosphorus compounds. Di-2-ethylhexylphosphinic acid was selected as a typical organo-phosphorus compound. Approximately 10 mg of the acid was heated with 5 ml of Van Slyke[3] combustion mixture for 10 minutes. The liberated CO_2 was absorbed in Ascarite and weighed. The carbon content calculated therefrom was consistently 10 to 15% lower than the theoretical value. An increase in the time of oxidation to 15 min did not produce higher results. No further work is contemplated because the wet-combustion technique does not appear to offer sufficient advantages, for this application, over the usual combustion-train method.

[1] J. C. White, "Chemical Analyses of Fluorides and Their Contaminants," *ANP Quar. Prog. Rep. June 10, 1953*, ORNL-1556, p. 97.

[2] J. C. White, "Analytical Chemistry of Reactor Materials," *ANP Quar. Prog. Rep. Sept. 10, 1953*, ORNL-1609, p. 118.

[3] P. S. Farrington, C. Niermann, and E. H. Swift, "Determination of Carbon by Wet Combustion," *Anal. Chem.* **21**, 1423 (1949).

Determination of Active Hydrogen in Secondary Amines

W. J. Ross

The determination of active hydrogen in secondary amines was investigated as a means of measuring trace concentrations, in the presence of tertiary amines, of secondary amines that have eight carbon atoms or more. Two reagents for this procedure are available; they are lithium aluminum hydride ($LiAlH_4$) and methyl magnesium bromide (CH_3MgBr) which react according to the equations:

$$4R_2NH + LiAlH_4 \xrightarrow{\text{diethyl ether}} LiAl(R_2N)_4 + 4H_2 \quad (1)$$

$$R_2NH + CH_3MgBr \xrightarrow{\text{diethyl ether}} MgBr(R_2N) + CH_4 \quad (2)$$

Several experiments were conducted with $LiAlH_4$ and dioctylamine. The experiments were unsuccessful primarily because of the excessive time (8 to 16 hr) required to liberate hydrogen quantitatively from the secondary amine and because of the difficulty in preparing a satisfactory solution of $LiAlH_4$ in diethyl ether. Commercial-grade $LiAlH_4$ is highly contaminated with the hydroxides of lithium and aluminum. It has been indicated[4] that CH_3MgBr is a more satisfactory reagent with respect to reaction rate with secondary amines than is $LiAlH_4$; however, preparation of the Grignard reagent is difficult because of its extreme reactivity with water. Commercially prepared reagent has been ordered and will be used for this purpose.

Effect of Impurities in Diethyl Ether on Its Extraction of Uranium

T. R. Phillips

The inconsistent uranium results that have been obtained by colorimetric procedures on standard uranium solutions have often been attributed to the

[4] W. A. Whaley, private communication to J. C. White, June 1, 1953.

particular lot of diethyl ether used to extract the uranyl nitrate. A cursory investigation was made to check the specifications of the Mallinckrodt and the Baker and Adamson brands of diethyl ether. The distinguishing feature of Mallinckrodt diethyl ether is that it is supplied in 1- and 5-lb metal containers, whereas amber-colored bottles are used by Baker and Adamson. The specifications were checked by the methods given by Rosin,[5] and each brand was then used in the extraction of uranium from four volumes each of a standard solution that contained 2.55 mg of uranium per milliliter. Both brands of ether exceeded the allowable acid concentration and failed to pass the specification tests for peroxides and for aldehydes and ketones. Nevertheless, the uranium results (2.56 mg of uranium per milliliter) were in agreement and satisfactory; the relative standard deviation was 1.5%. These results indicate that the cause of inconsistent colorimetric results for uranium lies elsewhere than in the ether used for extraction. However, because of the small number of tests included in this study, each batch of diethyl ether that is used when inconsistent results are obtained on standard solutions is being checked.

Amperometric Determination of Phosphate in Acidic Solutions of Uranium Phosphate

E. C. Cogbill[6]

The amperometric titration of phosphate with a solution of uranyl acetate was applied to the analysis of perchloric and sulfuric acid solutions of uranium phosphate. Uranium was removed on Dowex-50 cation-exchange resin prior to the titration of the phosphate. A relative standard deviation of 0.6% was found for samples that contained 65 to 150 mg of phosphate in the presence of 180 mg of uranium and in acid concentrations of the order of 8 *M* $HClO_4$ and 11 *M* H_2SO_4. A final topical report of this work is being prepared.

HOMOGENEOUS REACTOR PROGRAM

O. Menis, M. L. Druschel
S. A. Reed, C. K. Talbott
J. R. Lund, S. R. Buxton

Analytical development work for the HRP consisted of the evaluation and development of methods of analysis for four types of samples: (1) materials used in the preparation of thorium oxide slurries; (2) slurries of uranium and thorium compounds; (3) uranyl sulfate solutions that contained corrosion or fission products; and (4) corrosion scales or solutions of corrosion films of stainless steels. In addition, methods of analysis for miscellaneous materials used in corrosion research were also investigated.

Analysis of Materials Used in Preparation of Thorium Oxide Slurries

Thorium Nitrate (C. K. Talbott). The nitrate content of relatively pure thorium nitrate was determined by passing an aqueous solution of the compound through a Dowex-50 cation-exchange resin column. The eluted nitric acid was titrated with standard alkali. The relative standard deviation of three determinations was 0.2%.

Thorium Oxide (C. K. Talbott). Samples of thorium oxide, obtained from a study of the ignition time required to convert the oxalate to the oxide, were analyzed for residual oxalate. The samples were dissolved in a known volume of standard ceric sulfate solution, the resulting solution was acidified with sulfuric acid, and the excess ceric ion was titrated with standard ferrous sulfate solution.

Analysis of Slurries

O. Menis, C. K. Talbott
M. L. Druschel

Slurries of UO_3, UO_2, uranyl phosphate, magnesium uranium oxide, and ThO_2 were analyzed.

Heretofore, sampling techniques have not been entirely satisfactory. Phase separation of relatively large (approximately 50-g) samples of slurries was made by centrifugation. Separation and dissolution of the solid phase of such large samples often required more than 2 hours. Because more rapid analyses are desired, methods of obtaining smaller quantities of representative material were studied.

Currently, a plastic model of a V-shaped, rotating blender, designed by the REED, is being tested. This apparatus has been used to remove 1- to 2-g portions of the slurry. The uniformity of these smaller portions was checked by determining uranium in portions taken successively from a typical UO_3 slurry sample. The relative standard deviation, determined from the results of more than 20 such tests, was found to be less than 1%. A

[5] J. Rosin, *Reagent Chemicals and Standards*, 2d ed., p. 172-4, Van Nostrand, New York, 1946.

[6] Research participant from the University of Virginia.

stainless steel blender that embodies several minor mechanical changes is now being fabricated and will be used in the near future.

An increase in speed from 5,000 to approximately 18,000 rpm has been achieved by the addition of a high-speed attachment to the centrifuge previously used for phase separation. At this higher speed the two phases of the slurries are readily separated. The liquid phase does not show any Tyndall effect that would result from the colloidal suspension of the slurry. The value of conductivity measurements for indicating the completeness of phase separation is under study.

Slurries of Uranium Compounds. Methods for the determination of uranium, phosphate, and corrosion products in the aqueous phase were described in a previous report.[7] Additional determinations have included sulfate, determined turbidimetrically as barium sulfate, and sulfite, determined by a conventional iodometric titration.

Magnesium in the aqueous phase of a slurry of mixed magnesium-uranium oxide (MgU_2O_7) was determined colorimetrically. Eriochrome Black T, described by Harvey *et al.*,[8] was found to be a sensitive colorimetric reagent for the determination of microgram quantities of magnesium. Best precision was obtained when absorbancy readings were taken within 15 min after the addition of the reagent. The relative standard deviation of the method was found to be 5% in the range of 0.4 to 1.6 μg of magnesium per milliliter of final solution.

Macro quantities of magnesium in the solid phase were determined volumetrically by titration with ethylenediaminetetraacetic acid (EDTA), also known as Versene,[9] after uranium was removed by precipitation as ammonium diuranate. For a quantitative recovery of magnesium, a reprecipitation of uranium was found to be necessary. From a series of four synthetic mixtures that contained 50 mg of magnesium in the total test sample, the magnesium recovery was 100.8% with a relative standard deviation of 0.5%.

Several methods for the determination of microgram quantities of uranium(IV) in the solid phase were further investigated.[10] If high concentrations of uranium(VI) are present, the UF_4 separation method is subject to coprecipitation errors which lead to high results.

Chloranilic acid was tried as a colorimetric reagent for the estimation of microgram quantities of uranium(IV). In general, conditions were the same as those used in the determination of zirconium by means of the same reagent as discussed in the section *Zirconium* of this report. Although Beer's law is not obeyed in the concentration range of 5 to 50 μg of uranium(IV) in a final volume of 50 ml, the results are reproducible when a calibration curve is used. The relative standard deviation of duplicates is not greater than 5%. The presence of uranium(VI) reduces the sensitivity of the method; therefore the uranium(VI) concentration must be known. A maximum of 300 mg of uranium(VI) can be tolerated in the 50-ml final volume, but this concentration reduces the sensitivity by a factor of 60. Other interferences are the same as those described in the method already mentioned for the determination of zirconium.

A spectrophotometric titration of uranium with ceric sulfate was tried in order to obtain a more sensitive method. The procedure is based on the method of Bricker and Sweetser[11] for the determination of macro quantities of uranium(IV) and iron(II). The final method adapted for microdetermination requires the titration of uranium(IV) with a standard ceric sulfate solution, approximately 0.001 *N*, in the presence of iron(II) in a 0.5 *N* sulfuric acid solution after the addition of milligram quantities of fluoride ion to complex the iron(III). From a series of determinations of 120 to 150 ppm of uranium(IV) in uranium(VI) in the presence of 60 to 300 μg of iron(II), the relative standard deviation of the method was found to be less than 10%. As little as 10 ppm of uranium(IV) in uranium(VI) can be estimated by this procedure, which will be included in the *ORNL Master Analytical Manual*.

The method by which microgram quantities of nitrate are determined by Dowex-50 cation-exchange-

[7] O. Menis, J. R. Lund, M. L. Druschel, and C. K. Talbott, "Analytical Studies for the Homogeneous Reactor Program," *Anal. Chem. Semiann. Prog. Rep. April 20, 1953*, ORNL-1547, p. 17.

[8] A. E. Harvey, Jr., J. M. Komarmy, and G. M. Wyatt, "Colorimetric Determination of Magnesium with Eriochrome Black T," *Anal. Chem.* 25, 498 (1953).

[9] K. L. Cheng, T. Kurtz, and R. H. Bray, "Determination of Calcium, Magnesium, and Iron in Limestone," *Anal. Chem.* 24, 1640 (1952).

[10] M. L. Druschel, "Determination of Uranium(IV) in Uranyl Oxide," *Anal. Chem. Quar. Prog. Rep. Jan. 10, 1953*, ORNL-1474, p. 46.

[11] C. E. Bricker and P. B. Sweetser, "Spectrophotometric Titration of Uranium and Iron," *Anal. Chem.* 25, 764 (1953).

resin separation and phenoldisulfonic acid reagent is being prepared for issue to the *ORNL Master Analytical Manual*. Procedures for the removal of nitrite and chloride interferences are under study.

Slurries of Thorium Oxide. Thorium oxide slurries, as well as several thorium compounds produced in experimental batches, were analyzed. Sampling and separation procedures for the thorium oxide slurries were the same as for slurries of uranium compounds.

The study of the chloranilic acid method for the determination of thorium[12] in the aqueous phase was completed; the work will be reported in a topical report. The reaction is carried out in a 0.3% chloracetic acid–0.015% chloranilic acid solution that is buffered to a pH of 2.2 with sodium acetate. Quantities of 1 to 10 μg of thorium can be determined readily with a relative standard deviation of less than 10%. Sulfate, phosphate, fluoride, and ferric ions interfere seriously with the determination. Uranium(VI), when present in a 1:1 weight ratio with thorium, increases the absorbancy by 33%.

A rapid and precise method was developed for the determination of thorium in the solid phase. The wet solid is first dissolved in hot, concentrated perchloric acid, and thorium is determined by titration with EDTA. The procedure of Fritz and Ford[13] requires the titration of a thorium solution, buffered at a pH of 2.8, with a standard EDTA solution until the red color of the thorium-alizarin red S lake disappears. In order to obtain a sharper end point, the procedure was modified to require the addition of an excess of standard EDTA and back-titration with standard thorium solution to the first appearance of the red color of the lake. Uranium does not interfere with the titration except that the end point is obscured when more than 100 mg of uranium in a volume of 50 ml is present. A relative standard deviation of 0.4% was obtained in the analysis of a series of 10 standards that contained 5 to 50 mg of thorium per 50-ml volume.

Analysis of Uranyl Sulfate Solutions

O. Menis C. K. Talbott
M. L. Druschel

Methods for the analysis of uranyl sulfate solutions for microgram quantities of zirconium, cerium, ruthenium, and iodine compounds were studied.

A topical report that presents the results of the study of the chloranilic acid method for the determination of zirconium has been written. It describes the procedure for the determination of 0.4 to 4 μg of zirconium per milliliter in the presence of as much as 6 mg of uranium per milliliter and for the elimination of some of the more serious interferences. The relative standard deviation of the method is approximately 3%.

A sensitive spectrophotometric titration method was developed for the determination of microgram quantities of cerium in uranyl sulfate solutions. An excess of iron(II) is added and the excess is titrated with standard ceric solution. Standard solutions that contained from 75 to 250 μg of ceric ion were titrated with a relative standard deviation of 5%. The procedure is being written for the *ORNL Master Analytical Manual*.

The determination of ruthenium by the β-nitroso-α-naphthol method[14] was re-examined with a view to eliminating the troublesome separation of ruthenium by distillation from uranium and other elements. The procedure given earlier was modified slightly by increasing the concentration of reagent to 0.03% of the final volume and by saturating the final solution with SO_2. The results obtained with standard solutions indicate that as much as 5 mg of uranium per milliliter can be tolerated. There is a moderate, linear decrease of sensitivity with increased uranium concentration; the total decrease in sensitivity is 15% for 5 mg of uranium(VI) per milliliter of final solution. A correction factor for the effect of uranium concentration can be readily established from a calibration curve. Ions from the corrosion of stainless steel do not interfere. The relative standard deviation obtained for a series of standards was 3% for the concentration range of 2 to 8 μg of ruthenium per milliliter.

Iodine, iodate, and periodate compounds in microgram quantities were reduced to iodide with hydrazine sulfate and were titrated potentiometrically with silver nitrate solution. The determination of 50 μg of iodide can be carried out with a relative standard deviation of 3%.

[12] T. R. Phillips and O. Menis, "Analysis of Thorium Slurries," *Anal. Chem. Quar. Prog. Rep. June 26, 1952*, ORNL-1361, p. 51.

[13] J. S. Fritz and J. J. Ford, "Titrimetric Determination of Thorium," *Anal. Chem.* 25, 521 (1953).

[14] O. Menis and F. E. Jenkins, "Colorimetric Determination of Ruthenium," *Anal. Chem. Quar. Prog. Rep. March 26, 1952*, ORNL-1276, p. 82.

Analysis of Corrosion Products from Stainless Steel

Analyses were performed to determine the composition of solutions that had been used to remove oxide films from stainless steel and of solutions that had been used in pretreating surfaces of stainless steel. Milligram quantities of the pretreated steels and of the oxide films were also analyzed.

For the analysis of solutions that contained the dissolved oxide scale from stainless steel that had been subjected to HRE loop tests, determinations of iron, chromium, cobalt, manganese, nickel, and uranium were made by procedures already described in previous progress reports. Iron was determined volumetrically, and uranium was separated from most of the interfering ions by a Dowex-A1 anion-exchange resin and determined polarographically.

Solutions of 85% phosphoric acid that contained dissolved stainless steel were analyzed by procedures generally used in the HRP laboratory for the determination of the usual metallic ions produced by the corrosion of stainless steel. Iron was determined volumetrically by a Jones reductor–ceric titration method.

Colorimetric methods were evaluated in order to determine the precision and accuracy with which analyses of milligram quantities of stainless steel and of oxide scales could be made. Methods for the colorimetric estimation of the major constituents, that is, iron, chromium, and nickel, were evaluated by use of a NBS stainless steel sample. The α,α'-bipyridyl method for iron, the *s*-diphenylcarbazide method (after a bismuthate oxidation) for chromium, and the persulfate oxidation-dimethylglyoxime method for nickel were tested. For 12 determinations of iron, the average of the values found was 98.4% of the certified value, and the relative standard deviation was 0.6%. The average of the results of 12 chromium determinations was 97.4% of the certified value; the relative standard deviation was 3%.

In the determination of nickel, the final pH was adjusted to 10.5, the pH at which the colored complex was found to be most stable. Also, a differential method in which a standard nickel solution is used as the reference solution was employed. The averages of four samples analyzed directly and of six analyzed by the differential technique were 100.1 and 100.2%, respectively, of the NBS certified value. The relative standard deviation of the direct method was 1%; that of the differential method was 0.5%. The differential colorimetric method for the determination of 1 to 35% nickel in steel is comparable to gravimetric methods in accuracy and precision. Other standard steel samples will be analyzed for nickel by this method. In the case of both iron and nickel, an improvement in accuracy and precision of the methods will be sought.

Analysis of Aluminum Nitrate Solutions (C. K. Talbott). Aluminum in the solutions of aluminum nitrate that are used for corrosion studies was determined by acidimetric titration with standard hydrochloric acid.[15] A relative standard deviation of less than 0.8% was attained in titrating 25 standards that contained 25 to 75 mg of aluminum per volume of solution analyzed.

QUALITY CONTROL

S. A. Reed R. L. McCutchen

The control programs for the Analytical Chemistry Division laboratories at the X-10 site were expanded, emphasis being placed on the determination of uranium in the fluorometric and colorimetric ranges. Also, the laboratory located in Building 3508 was included in the control program.

In general, the control programs for the Analytical Chemistry Division laboratories at the Y-12 site have been curtailed, one program being temporarily discontinued during the latter part of May. This curtailment was caused in part by the normal fluctuation in the quantity and a change in the type of materials being tested and by the need for special types of control solutions, which are now being prepared.

The distribution, by laboratory, of the 3649 determinations evaluated for control purposes is summarized in Table 9, and for purposes of comparison, the control data for the previous period is also shown.

[15] R. M. Kolthoff and V. A. Stenger, *Volumetric Analysis*, Vol. II, 2d ed., p. 183, Interscience, New York, 1947.

TABLE 9. SUMMARY OF DETERMINATIONS EVALUATED FOR CONTROL PURPOSES

LABORATORY	DETERMINATIONS EVALUATED FOR CONTROL PURPOSES	
	December 1952 Through February 1953	March Through August 1953
Y-12 Site		
Raw Materials	8,613	585
HRP	288	330
ANP	1,067	194*
Total	9,968	1109
X-10 Site		
Building 4500	584	1322
Building 3019	628	1152
Building 3508	0	66**
Total	1,212	2540
GRAND TOTAL	11,180	3649

*March through May only.

**August only.

SERVICE ANALYSES

A semiannual summary of the analytical service work at the Y-12 site is given in Table 10.

ANP ANALYTICAL LABORATORY

J. C. White A. F. Roemer, Jr.
C. R. Williams

The service work of the ANP Analytical Laboratory has continued to consist mainly of the analysis of fluoride reactor fuels and of alkali-metal fluorides. The determinations made most often were those of sodium, fluoride, uranium, zirconium, nickel, iron, and chromium. Determinations made less often included those of sulfide and sulfate. A detailed account of the work of this laboratory is given elsewhere.[1]

[1] J. C. White, A. F. Roemer, Jr., and C. R. Williams, "Summary of Service Chemical Analyses," *ANP Quar. Prog. Rep. Sept. 10, 1953*, ORNL-1609, p. 121.

RAW MATERIALS ANALYTICAL LABORATORY

J. C. White W. F. Vaughan
L. J. Brady

A total of nearly 4000 samples was analyzed for the Raw Materials Group of the Materials Chemistry Division. These samples consisted of lignites, lignite ashes, leach-zone residues, and various acidic and basic leaches of these solids. The principal determination was for uranium, although a large number of determinations of iron, aluminum, calcium, sodium, magnesium, potassium, silica, molybdenum, phosphate, fluoride, total sulfur, and heat content were made. Recently, a program was initiated by the Raw Materials Group for the study of the extraction coefficients of a number of cations in benzene and kerosene solutions of secondary amines, such as dioctylamine. Determinations in both the aqueous and organic phases have been made of the cations of aluminum, iron,

TABLE 10. SUMMARY OF ANALYTICAL SERVICE WORK AT Y-12 SITE

	NUMBER OF PERSONNEL		ORNL DIVISIONS REQUESTING ANALYSES					OTHERS REQUESTING ANALYSES			
	TECHNICAL	NONTECHNICAL	MATERIALS CHEMISTRY	ANP	ELECTROMAGNETIC	ISOTOPE RESEARCH AND DEVELOPMENT	REED	ADP	Y-12 STORES	MISCELLANEOUS	TOTAL DETERMINATIONS
LABORATORY MAKING ANALYSES			NUMBER OF DETERMINATIONS								
HRP Analytical	5	3					16,054	321		755	17,130
ANP Analytical	2	7	10,492	4572							15,064
Raw Materials	2	8	30,884	40							30,924
Miscellaneous Analysis	1	2			78	114	381		782	1440	2,795
TOTAL	10	20	41,376	4612	78	114	16,435	321	782	2195	65,913

magnesium, calcium, manganese, molybdenum, zinc, copper, nickel, chromium, cobalt, cerium, and thorium.

HRP ANALYTICAL LABORATORY

O. Menis S. A. Reed
J. R. Lund

Over 17,000 determinations were made in the HRP Laboratory during the period. The major portion of the work consisted of the analysis of uranyl sulfate solutions and slurries of uranium oxide, uranium phosphate, and thorium oxide. Uranyl sulfate solutions were analyzed for uranium, iron, chromium, nickel, copper, manganese, sulfate, titanium, niobium, and cobalt. Both solid and aqueous phases of slurries of uranium dioxide, uranium trioxide, and uranyl phosphate were analyzed for uranium(IV), total uranium, nitrate, phosphate, iron, chromium, and nickel. Determinations performed on slurries of thorium oxide included thorium, oxalate, nitrate, iron, chromium, and nickel.

MISCELLANEOUS ANALYSIS LABORATORY

J. C. White L. J. Brady
W. F. Vaughan

Approximately 1300 samples were analyzed in the Miscellaneous Analysis Laboratory during this period.

The Stores Department of the Y-12 Plant continued to submit samples of lubricating oils for specification tests. The results of these tests are used to determine whether the oils delivered by the vendors meet the specification requirements as set forth in the purchase requisitions for lubricating oils.

[redacted]

This laboratory prepared and standardized dilute hydrochloric acid solutions at the rate of approximately 50 gal per week. Smaller volumes of other standard solutions of acids and alkalies were also prepared.

A number of uranyl sulfate solutions were analyzed for uranium, iron, nickel, and chromium during the first two months of this period.

Complete analyses of various metals and alloys, both ferrous and nonferrous, were performed to check the conformity of the alloys to specification requirements.

Samples of water were analyzed to determine the concentration of the major mineral impurities being introduced as waste into the water in Bear Creek. Another sample of water was tested to determine the quantity of iron and aluminum which might be expected to contaminate the solution when this water was used for dilution of the aqueous phase in an extraction process for recovering uranium from salvage solutions.

Samples of uranium oxide were prepared for isotopic assay from various batches of salvage in which the uranium was highly contaminated. The uranium was separated as the complex carbonate anion and was purified by precipitation with hydrogen peroxide.

A concrete test cylinder was examined for causes of low compressive strength. The results of the findings are reported elsewhere.[2]

Miscellaneous samples of plastic and of synthetic rubber were identified.

Milligram quantities of $U^{233}Cl_4$ and $U^{235}Cl_4$ were prepared as standard materials for the Isotope Analysis Methods Laboratory of the Stable Isotopes Division. The procedure of Pitt *et al.*[3] for the chlorination of UO_3 with hexachloropropene (HCP) was modified to permit the use of 50-mg samples and to obtain a maximum yield of final product. The apparatus that was used consisted of a 2-ml, round-bottom flask, which was charged with 0.5 ml of double-distilled HCP and 50 mg of $U^{235}O_3$ and was fitted to a condenser by means of a standard-taper joint. The flask was immersed in a mineral-oil bath at 165 to 175°C for about 30 min to ensure complete reaction. The temperature was then increased to 220°C to distill off trichloroacrylyl chloride (CAC) which is formed as a by-product during chlorination. This step was found necessary because of the appreciable solubility of UCl_4 in CAC. Excess HCP was removed by washing with carbon tetrachloride. The yield of final product was greater than 90% of theoretical. Spectroscopic studies indicated that the product was essentially pure.

---

[2] C. D. Susano, *Examination of a Concrete Test Cylinder of Low Compressive Strength*, ORNL CF-53-8-188 (Aug. 31, 1953).

[3] B. M. Pitt, W. F. Curran, J. M. Schmitt, E. L. Wagner, and A. J. Miller, *The Preparation of TCl_4 with Hexachloropropylene*, CEW-TEC C-2.350 (July 1945).

[redacted]