MARTIN MARIETTA ENERGY SYSTEMS LIBRARIES

3 4456 0352723 5

ORNL 981
Physics 48

BORAL: A NEW THERMAL NEUTRON SHIELD

SUPPLEMENT I

A. S. Kitzes
W. Q. Hullings

OAK RIDGE NAT
CENTRAL RE
CIRCULA
4500N
LIBRARY LOAN COPY
DO NOT TRANSFER TO ANOTHER PERSON
If you wish someone else to see this report, send in
name with report and the library will arrange a
ORNL-118 (6-97)

OAK RIDGE NATIONAL LABORATORY
OPERATED BY
CARBIDE AND CARBON CHEMICALS COMPANY
A DIVISION OF UNION CARBIDE AND CARBON CORPORATION
UCC
POST OFFICE BOX P
OAK RIDGE, TENNESSEE

ORNL-981

This document consists of
18 pages. Copy 4 of 289
Series B

Contract No. W-7405-eng-26

Reactor Experimental Engineering Division

"BORAL: A NEW THERMAL NEUTRON SHIELD"

SUPPLEMENT I

by

A. S. Kitzes
W. Q. Hullings

DATE ISSUED:
APR 10 1953

OAK RIDGE NATIONAL LABORATORY
Operated by
CARBIDE AND CARBON CHEMICALS COMPANY
A Division of Union Carbide and Carbon Corporation
Post Office Box P
Oak Ridge, Tennessee

MARTIN MARIETTA ENERGY SYSTEMS LIBRARIES

3 4456 0352723 5

ORNL 981
Physics

INTERNAL DISTRIBUTION

1. C. E. Center
2. Biology Library
3. Health Physics Library
4-5. Central Research Library
6. Reactor Experimental Engineering Library
7-12. Central Files
13. C. E. Larson
14. W. B. Humes (K-25)
15. L. B. Emlet (Y-12)
16. A. M. Weinberg
17. E. H. Taylor
18. E. D. Shipley
19. C. E. Winters
20. F. C. VonderLage
21. R. C. Briant
22. J. A. Swartout
23. S. C. Lind
24. F. L. Steahly
25. A. H. Snell
26. A. Hollaender
27. M. T. Kelley
28. W. J. Fretague
29. G. H. Clewett
30. K. Z. Morgan
31. J. S. Felton
32. A. S. Householder
33. C. S. Harrill
34. D. S. Billington
35. D. W. Cardwell
36. E. M. King
37. R. N. Lyon
38. A. J. Miller
39. R. B. Briggs
40. A. S. Kitzes
41. W. Q. Hullings
42. O. Sisman
43. R. W. Stoughton
44. C. B. Graham
45. W. R. Gall
46. H. F. Poppendiek
47. S. E. Beall
48. W. M. Breazeale (consultant)
49. J. P. Gill
50. D. D. Cowen
51. M. J. Skinner

EXTERNAL DISTRIBUTION

52. R. F. Bacher, California Institute of Technology
53-289. Given distribution as shown in TID-4500 under Physics Category

DISTRIBUTION PAGE TO BE REMOVED IF REPORT IS GIVEN PUBLIC DISTRIBUTION

TABLE OF CONTENTS

	Page
ABSTRACT	4
INTRODUCTION	5
EXPERIMENTAL DEVELOPMENT PROGRAM	6
Additions to make Aluminum Wet B_4C	6
Effect of Temperature during Mixing of B_4C into Al	7
TECHNIQUE FOR CASTING INGOTS	8
Proposed Changes for Casting Ingots	9
Advantages of the New Casting Technique over McKinney-Rockwell Method	9
ROLLING BORAL INGOTS INTO LARGE SHEETS	10
Rolling at Lukens Steel Company	10
Rolling at Republic Steel Company	11
Rolling at ORNL	11
PHYSICAL PROPERTIES	12
Data	12-14
ACKNOWLEDGEMENTS	14
APPENDIX	15
Principle of Proposed Method for Determining Thermal Conductivities	15
Application of Proposed Method for Determining Thermal Conductivity	16
Other Testing and Calculation Methods	17

ABSTRACT

The technique for making large sheets of boral described in ORNL-242, which consists of mixing B_4C with aluminum has been modified and simplified. Recommendations are given for casting and rolling ingots into sheets.

Additional physical property data are included. Tensile strength measurements of boral indicate no serious damage upon irradiation with a total of 2.6×10^{19} nvt in the ORNL reactor. Thermal conductivity for the 50-50 mixture was found to be 25.0 Btu/hr-ft^2-°F/ft at 200 °F and 19.0 Btu/hr-ft^2-°F/ft at 500 °F.

A method for measuring thermal conductivities is described.

In order to make boral available to other sites, ORNL has agreed to accept urgent requests for small amounts of boral as sheets not larger than 24" x 96" x 1/4" or 1/8", other program commitments permitting. Requests or purchase orders for sheet stock or simple fabrication parts may be submitted directly to ORNL, giving detailed requirements.

INTRODUCTION

Boral, as described in ORNL-242, is an engineering material for the absorption of thermal neutrons.

Boral is a mixture of boron carbide (B_4C) and aluminum in which the boron carbide is suspended in molten aluminum and the resultant product allowed to solidify into a form suitable for rolling. It is useful because of its light weight, its high boron content for the absorption of thermal neutrons without production of hard gammas, its good heat conductivity and its thermal stability up to the melting point of aluminum.

In ORNL-242, "Boral: A New Thermal Neutron Shield", McKinney and Rockwell adequately discuss the history, development, and fabrication of boral and establish a procedure for producing large quantities of this material. However, they were unable to conclude their program for the production of large sheets of boral. This report summarizes the work done in concluding the program initiated by McKinney and Rockwell. Additional physical property data and information relative to the availability and fabrication of large quantities of boral are included.

In ORNL-242, McKinney and Rockwell reported that small scale attempts to mix B_4C powder with molten aluminum were unsuccessful. The aluminum did not

wet the B_4C and the resultant mix when cooled was crumbly and incohesive. Preheating the B_4C, coating the B_4C with B_2O_3 or Al_2O_3 and varying the temperature had little effect. A successful ingot was finally made by stirring a mixture of aluminum powder and B_4C into molten aluminum, keeping the temperature at 1230 $^{o}F \pm 20^{o}$. This method was therefore established as the standard procedure for casting ingots.

EXPERIMENTAL DEVELOPMENT PROGRAM

Additions to make Aluminum wet B_4C

In the McKinney-Rockwell procedure, it is difficult to understand and interpret the action of the aluminum powder in causing the molten aluminum to wet the B_4C. In an effort to understand the mechanisms involved, a series of experiments was performed in which varying percentages of Al_2O_3 were substituted for part of the aluminum powder and added to the molten aluminum with the B_4C. The results were negative; the B_4C floated on top of the molten metal.

In a second series of tests, varying percentages of B_2O_3 were mixed with the B_4C and added to the molten aluminum, omitting the use of aluminum powder. Good workable mixes were obtained resulting in strong homogeneous ingots. The B_2O_3 content varied from 5-50% of the weight of the B_4C. During the addition of the B_2O_3-B_4C mixture to the molten metal, a black smoke was given off and green flames popped on the surface of the melt. This same reaction was observed in the McKinney-Rockwell process.

Since the addition of B_2O_3 caused the aluminum to wet the B_4C, a B_2O_3 coating was placed on the carbide by oxidizing it for one hour in a muffle furnace. The oxidized carbide was then added to the molten aluminum. Good workable mixes and perfect ingots were obtained. No black smoke or green flames were evident. This method is now the basis of the present fabrication technique.

The mechanism of how the B_2O_3 influences the wetting of B_4C by the aluminum is still not known. The B_2O_3 probably acts as a fluxing agent and as such helps to minimize the absorption of gases and the oxidation of the aluminum. Since inert atmospheres above the melts made no difference, their use was discontinued. Although either the oxidized carbide or B_2O_3 and carbide can be added freely to the molten aluminum, the oxidized carbide is preferred.

Effect of Temperature During Mixing of B_4C into Aluminum

The temperature at which the oxidized B_4C was added to the molten aluminum was not critical as long as it was below that at which the oxidation of aluminum became severe. No apparent difficulty was observed when oxidized B_4C was added to molten aluminum at 1400°-1450°F; however, the temperature was usually kept at 1300°-1350°F and the B_4C was added at a rate which did not reduce the temperature of the molten aluminum by more than 25°-35°F. Adding big slugs of carbide to the melt caused the mix to cool as much as 400°F and resulted in a loss of time required to reheat the mixture. When the required temperature was again reached, more B_4C was added, and only occasionally when the mix was cooled too much through the addition of larger doses of carbide it was impossible to remelt the mixture without excessive oxidation of the aluminum.

TECHNIQUE FOR CASTING INGOTS

The capacity of the ORNL rolling mill limited the sheet width to 24" and the billet thickness to 1 1/2" including covers. For this reason it was decided to roll ingots, 1" x 20" x 24" with 1/4" cover plates on each side, which produced a trimmed sheet, 24" x 108" x 1/4". A 150 KW Ohio Crankshaft Company "Tocco" tilting type induction furnace was used to heat a graphite crucible 9" in diameter with 1" wall thickness. The temperature was controlled by a Micromax electric pyrometer from a thermocouple set in the graphite. The pre-oxidized B_4C (oxidized at 1000 ^{o}F for one hour) was stirred into the molten aluminum by hand with stainless steel paddles, and the mix was then allowed to stand for 10-15 minutes in order to attain a uniform temperature.

While the carbide was stirred into the molten aluminum, a graphite mold, 20" x 24" x 1" was heated electrically to between 800°-900°F. One continuous pour was then made into the heated mold; the residual mix in the crucible was incorporated into the next pour.

During cooling, the ingot shrunk sufficiently for easy removal from the mold. It was then prepared for rolling according to the procedure outlined in ORNL-242 except that the operation of metal spraying with aluminum was eliminated.

To produce an ingot, 20" x 24" x 1" containing 35% B_4C by weight, 13.5 lbs B_4C and 24.5 lbs 2S aluminum pig were required. The B_4C content was decreased from 50%, the percentage used by McKinney and Rockwell, to 35% to facilitate rolling and fabrication of the sheet stock. This phase of the work is more fully discussed in the section entitled, "Rolling at Lukens Steel Company."

Proposed Changes for Casting Ingots

Minor changes which will lower costs and simplify the operation are being incorporated in the aforementioned ingot-casting procedure. Instead of pouring the boron carbide into the mixture by hand, it will flow, at a controlled rate, by gravity from an electrically heated hopper. After oxidation in a muffle furnace, the carbide will be transferred to the hopper and kept at a temperature, probably between 800° - 1000 °F, permitting it to flow freely. This will minimize the temperature drop of the melt during the addition of the carbide and reduce the temperature gradient between the top and bottom of the crucible.

It is also planned that mechanical stirring will replace the manual operation, and the casting mold will be cooled from the bottom by forced air circulation, allowing the entrapped gases to escape from the top.

Advantages of the New Casting Technique over McKinney-Rockwell Method

1) Ten to twelve ingots can be mixed before replacing the crucible and mold. In the McKinney-Rockwell procedure, one crucible per ingot was expended.

2) Elimination of the aluminum powder minimizes the oxidation of the molten aluminum.

3) Elimination of the metal spraying operation prior to cladding the ingots and the use of nitrogen during mixing lowers the cost of the finished sheet.

ROLLING BORAL INGOTS INTO LARGE SHEETS

Rolling at Lukens Steel Company

Unsuccessful attempts at large-scale experimental rolling were made by Lukens Steel Company, Coatesville, Pennsylvania. Two ingots, 27" x 36" x 6", containing 50% B_4C by weight and prepared according to the procedure outlined in ORNL-242, were scheduled for rolling into sheets, 56 1/2" x 66 1/2" x 3/16". Failure of the rolling attempt was attributed to rough handling of the ingots during rolling. Greater care could not be used because the mill designed primarily for steel ingots could not be slowed down to the desired speed and the rolls could not be lubricated with kerosene.

Upon examination of the damaged sheets there was evidence of insufficient aluminum to coat all the B_4C in the 50-50 mixture. It is possible that this defect, which apparently was not too important when rolling small ingots, became more prominent in rolling the larger ones and contributed to the unsuccessful rolling attempt. It was therefore decided to lower the B_4C content in an effort to improve the rolling characteristics.

Even at the lower B_4C concentration, sufficient attenuation of thermal neutrons can be obtained for more applications without using excessively thick sheets.

Rolling at Republic Steel Company

A successful rolling was accomplished at the South Division Plant of the Republic Steel Company in Canton, Ohio. Republic was chosen for this experiment because it had hand-fed or jobber rolling mills which were more suited for the rolling of boral. Two ingots, 23" x 14" x 2", containing 35% B_4C by weight, were prepared, placed in 2" aluminum frames and covered with 1/2"-sheet 2S aluminum. These ingots were then heated to 1100 °F, reduced 50%, reheated to 1000 °F, and rolled into sheets 52" wide, 92" long, and 3/16" thick, the minimum attainable thickness on the rolls. Cold rolls, frequently lubricated with kerosene were used. After a few more large scale experimental rollings, boral could be supplied commercially in sheets, 5' x 10' x 3/16" if this is warranted.

Rolling at ORNL

Because of the small quantities required to meet present commitments, boral was rolled in the ORNL rolling mill. Since the capacity of this mill limited the maximum width of the finished sheet to 24", sheets 24" x 84"-96" x 1/4" or 1/8" were rolled, and wider sheets were fabricated by joining several smaller ones. Ingots were prepared according to the procedure outlined in the section entitled, "Technique for Casting Ingots", placed in 1" frames and clad with 1/4" aluminum. The rolling procedure was essentially the same as the one used at Republic.

PHYSICAL PROPERTIES

Data

1) Composition (for 1/4" sheet including Al cladding on each side)

	Sandwich Material 35% B_4C by Weight		Sandwich Material 50% B_4C by Weight	
	%(wt)	mg/cm^2	%(wt)	mg/cm^2
B	15.7	254	22.4	342
C	4.3	71.6	6.2	100.1
Al	80.0	1303.0	71.4	1103.5

Borals with B_4C contents varying from 10 - 50% in the core can be supplied.

2) Strength

a) Tensile

Tensile specimens containing 50% B_4C by weight were exposed to radiations in the X-10 pile for 14 months with no serious damage.

Weeks of Exposure	Total nvt	Average Tensile Strength (psi)
0	0	5000
6	3.1×10^{18}	6335
8	4.8×10^{18}	7500
30	1.2×10^{19}	5650
60	2.6×10^{19}	5500

Additional samples are now being exposed in the Hanford piles - no results are available at this time.

b) Elongation - 0.4% (ORNL-242)

c) Shear - 8,237 psi (ORNL-242)

3) Thermal Properties - 50% B_4C by weight

a) Thermal Conductivity (Btu/hr-ft-^oF)

Temp. (^oF)	200	450	500
k	25	19.2	19.0

The above values are being rechecked and additional values for pure B_4C and for boral with varying B_4C content are being obtained.

b) Heat Content: .175 Btu/lb-^oF (ORNL-242)

4) Density: 2.5 g/cc

5) Cost: \$15-\$17/ft^2 for material containing 35% B_4C in the core

6) Workability:

Recommended methods for working boral are shearing and punching. Boral with 35% B_4C can be sawed at low speeds with Do-All saws. All welding must be done with heliarc. Boral tubes can be hot turned or pressed.

7) Availability:

In order to make boral available to other sites, ORNL has agreed to accept urgent requests for small amounts of boral as sheets not larger than 24" x 96" x 1/4" or 1/8", other program commitments permitting. Requests or purchase orders for sheet stock or simple fabricated parts may be submitted directly to ORNL, giving detailed requirements.

CONFIDENTIAL

8) Other Applications:

Boral can be sprayed onto mild steels. However, the bond between the sprayed material and the base metal needs improvement.

ACKNOWLEDGEMENTS

The authors wish to acknowledge the assistance of V. L. McKinney and the Y-12 Shops in setting up the casting procedure for producing ingots and of C. D. Smith and his group at ORNL in rolling the boral.

/gd

CONFIDENTIAL

APPENDIX

Principle of Proposed Method for Determining Thermal Conductivities

Longitudinal heat flow through a specimen was measured by the temperature rise of a metered amount of water passing through a heat exchanger located at the base of the sample. The temperature drop across the specimen was measured with thermocouples embedded in the sample a known distance apart. Radiation, conduction and convection losses were minimized by employing an electrically heated guard ring system in which the cavity between the sample and the walls of the guard ring was filled with a powdered thermal insulation, Sil-O-Cel. Under these conditions, the thermal conductivity was computed by means of the relationship

$$k = \frac{W c_p \, (\Delta T)_w \, L}{A \, (\Delta T)_s}$$

k = thermal conductivity, Btu/hr-ft-$^{\circ}$F

c_p = specific heat of water, Btu/hr-lb

$(\Delta T)_w$ = temperature rise in water, $^{\circ}$F

L = distance between thermocouples embedded in sample, ft

A = cross-sectional area of sample, ft^2

$(\Delta T)_s$ = temperature drop in sample, $^{\circ}$F

Application of Proposed Method for Determining Thermal Conductivity

In an effort to simulate experimentally the method set forth in the section entitled, "Principle of Proposed Method for Determining Thermal Conductivity," the apparatus diagrammatically shown in Figure 1 was set-up. The Specimen (D), 2 cm in diameter and 5 cm in length was sandwiched between a heat source (A) and a heat exchanger (C) and the complete assembly was held tightly together by a spring loaded clamp (3)(4) to assure thermal contact between the various metal faces. The temperature of the heat source, a solid cylinder of copper wound with high resistance nichrome wire was controlled by a variac. The heat exchanger was also made of copper with water flowing in a baffled path as the heat exchange medium. Knowing the water flow rates, the quantity of heat being conducted was computed from the temperature rise in the water. A thermopile made of fluorethene, containing six iron-constantin thermocouples was used to measure the temperature rise of the water.

The temperature drops of the specimen and simulator (B) were measured with chromel-alumel thermocouples sealed into small holes with saureisen. The simulator or guard assembly (F), a brass tube wound with high resistance nichrome wire was cooled by water (5) as shown in order to effect the same temperature drop in the simulator and specimen. The cavity between the sample and simulator walls was filled with powdered Sil-O-Cel to minimize heat losses. Data were taken when the system reached steady state.

CONFIDENTIAL

Other Testing and Calculation Methods

1) Density - gross volume measurements

2) Tensile Strength - ASTM B209-46T, 1946 Ed., Part 1B, p 572

3) Shear - ASTM C102-36, 1946 Ed., Part II, p 228

DRAWING NO. 10574

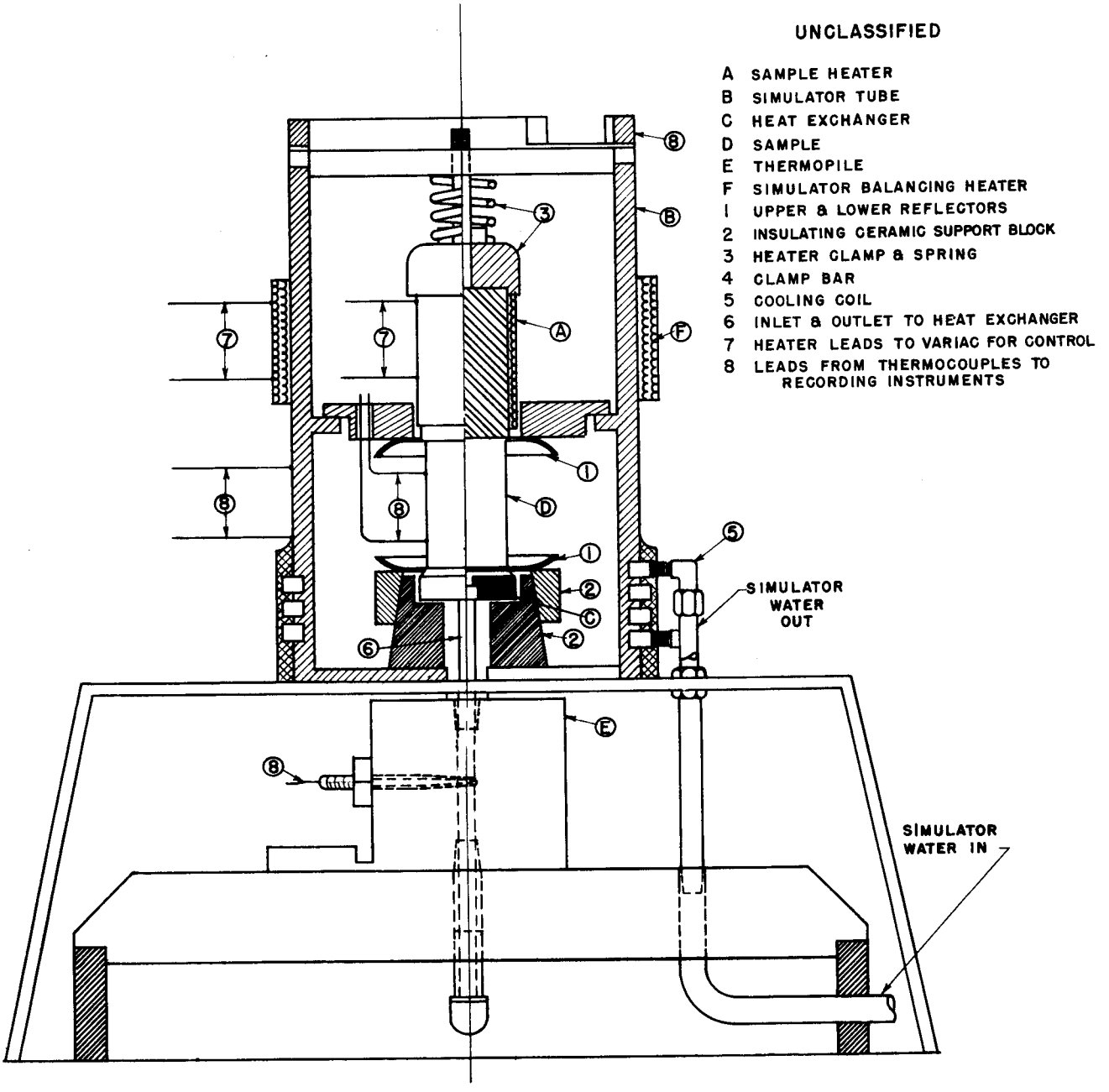

FIGURE 1 THERMAL CONDUCTIVITY APPARATUS