SECRET
SECURITY INFORMATION

CENTRAL RESEARCH LIBRARY
DOCUMENT COLLECTION

CLASSIFICATION CHANGED TO: Declassified
BY AUTHORITY OF: AEC 11-21-55
BY: R. Morrison 8-14-56

INV 55

ORNL 1064
Chemistry-General

MARTIN MARIETTA ENERGY SYSTEMS LIBRARIES
3 4456 0352769 0

LABORATORY RECORDS
1954

RADIOACTIVITY OF DISSOLVER GAS

W. A. Brooksbank
E. J. Fuller

OAK RIDGE NATIONAL LABORATORY
CENTRAL RESEARCH LIBRARY
CIRCULATION SECTION
4500N ROOM 175
LIBRARY LOAN COPY
DO NOT TRANSFER TO ANOTHER PERSON
If you wish someone else to see this report, send in name with report and the library will arrange a loan.
UCN-7969 (3 9-77)

OAK RIDGE NATIONAL LABORATORY
OPERATED BY
CARBIDE AND CARBON CHEMICALS COMPANY
A DIVISION OF UNION CARBIDE AND CARBON CORPORATION
UCC
POST OFFICE BOX P
OAK RIDGE, TENNESSEE

RESTRICTED DATA
This document contains Restricted Data as defined in the Atomic Energy Act of 1946. Its transmittal or the disclosure of its contents in any manner to an unauthorized person is prohibited.

SECRET
SECURITY INFORMATION

[redacted] ORNL-1064

This document consists of 32 pages.
Copy 5 of 166 copies. Series A.

Contract No. W-7405-eng-26

ANALYTICAL CHEMISTRY DIVISION

M. T. Kelley, Director

C. D. Susano, Associate Director

RADIOACTIVITY OF DISSOLVER GAS

By

W. A. Brooksbank
E. J. Fuller

DATE ISSUED
AUG 7 1953

OAK RIDGE NATIONAL LABORATORY
Operated by
CARBIDE AND CARBON CHEMICALS COMPANY
A Division of Union Carbide and Corbon Corporation
Post Office Box P
Oak Ridge, Tennessee

[redacted]

MARTIN MARIETTA ENERGY SYSTEMS LIBRARIES
3 4456 0352769 0

[redacted]

[redacted]

1. C. E. Center
2. Biology Library
3. Health Physics Library
4-5. Central Research Library
6. Reactor Experimental Engineering Library
7-11. Central Files
12. Central Files, ORNL R.C.
13. C. E. Larson
14. W. B. Humes (K-25)
15. L. B. Emlet (Y-12)
16. A. M. Weinberg
17. E. H. Taylor
18. E. D. Shipley
19. F. C. VonderLage
20. M. T. Kelley
21. C. P. Keim
22. J. H. Frye, Jr.
23. R. C. Briant
24. J. A. Swartout
25. F. L. Culler
26. S. C. Lind
27. A. H. Snell
28. A. Hollaender
29. G. H. Clewett
30. K. Z. Morgan
31. T. A. Lincoln
32. A. S. Householder
33. R. S. Livingston
34. D. S. Billington
35. C. E. Winters
36. D. W. Cardwell
37. E. M. King
38. D. D. Cowen
39. G. C. Williams
40. W. A. Brooksbank
41. S. A. Reynolds

EXTERNAL DISTRIBUTION

42. American Cyanamid Company
43-50. Argonne National Laboratory
51. Armed Forces Special Weapons Project (Sandia)
52. Armed Forces Special Weapons Project, Washington
53. Army Chemical Center
54-58. Atomic Energy Commission, Washington
59. Battelle Memorial Institute
60-61. Brookhaven National Laboratory
62-63. California Research and Development Company
[redacted]. Carbide and Carbon Chemicals Company (C-31 Plant)
[redacted]. Carbide and Carbon Chemicals Company (K-25 Plant)
69-72. Carbide and Carbon Chemicals Company (Y-12 Plant)
73. Catalytic Construction Company
74. Chicago Patent Group
75. Chief of Naval Research
76. Columbia University (Hassialis)
77. Dow Chemical Company, Pittsburgh
78. Dow Chemical Company (Rocky Flats
79-83. duPont Company, Augusta
84-86. General Electric Company (ANPP)
87-92. General Electric Company, Richland
93. Hanford Operations Office
94-101. Idaho Operations Office (1 copy each to M. W. Echo, R. J. Francel, E. J. Fuller, and E. N. Hurd)

[redacted]

[redacted] unauthorized persons is prohibited.

[redacted]

[redacted] Iowa State Coll[redacted]
103-106. [redacted] Atomic Power [redacted]
107-109. Los [redacted]
110. Malli[redacted]
111. Massachusetts Institute of [redacted]nology (Kaufmann)
112. Materials Laboratory (WADC)
113-115. Mound Laboratory
116. National Advisory Committee for [redacted]onautics, Cleveland
117. National Bureau of Standards
118. National Lead Company of Ohio
119. Naval Medical Research Institute
120-121. Naval Research Laboratory
122. New Brunswick Laboratory
123-125. New York Operations Office
126-127. North American Aviation, Inc.
128. Patent Branch, Washington
129. Pratt and Whitney Aircraft Division (Fox Project)
130. Rand Corporation
131. Sandia Corporation
132. Savannah River Operations Office, Augusta
133. Sylvania Electric Products, Inc.
134. Tennessee Valley Authority
135. U. S. Naval Radiological Defense Laboratory
136. UCLA Medical Research Laboratory (Warren)
137-140. University of California Radiation Laboratory, Berkeley
141-142. University of California Radiation Laboratory, Livermore
143-144. University of Rochester
145-146. Vitro Corporation of America
147. Western Reserve University (Friedell)
148-149. Westinghouse Electric Corporation
150-164. Technical Information Service, Oak Ridge
165-166. Goodyear Atomic Corporation

[redacted]

[redacted]

[redacted]

[redacted]

CONTENTS

ABSTRACT

I. INTRODUCTION

II. DEVELOPMENT OF APPARATUS

- A. Dilution Apparatus
- B. Absorption Apparatus
- C. Sample Counting Tubes
- D. Tests and Experiments

III. SUMMARY

IV. ACKNOWLEDGMENTS

V. BIBLIOGRAPHY

VI. APPENDIX

[redacted]

[redacted]

ABSTRACT

This report reviews the development at Oak Ridge National Laboratory of a method for measuring beta activity in the gases from the dissolving of reactor fuel elements at the Chemical Processing Plant in Idaho.

This method and apparatus were designed to (1) make dilutions of the original gas sample and thus allow a wide range of activities to be measured, (2) remove the radioactive iodine and count only radioactive xenon and krypton, and (3) count the sample at known dilution, temperature, pressure, volume, and geometry.

The results of initial tests have been favorable, and it is concluded that the method is ready for subsequent use in Idaho.

I. INTRODUCTION

Construction of the apparatus for counting noble radioactive gases was begun in September, 1951, and completed in October. This phase of the work was done by M. W. Echo, American Cyanamid Co., under the supervision of W. A. Brooksbank, ORNL, and E. J. Fuller, of American Cyanamid Co. The calibrating and testing was done by Fuller, supervised by Brooksbank.

The three main sections of the apparatus are the dilution unit, the absorption section, and the counting arrangement. The dilution buret, a U-tube capillary manometer, and the sampling and storage bulbs comprise the dilution part. A 25-ml buret, another manometer, and the absorption pipets comprise the absorption section. The counting mechanism consists of a Geiger-Muller type "Tracerlab" counting tube, mounted in a lead chamber and connected to a scaling and timing mechanism, which measures the beta activity of the gas in the sample counting tube.

II. DEVELOPMENT OF APPARATUS

A. Dilution Apparatus

The gas is diluted so that the radioactivity of the sample to be counted will fall within the most accurate range of the counting mechanism and to lower the radioactivity level in the operator's working area. Figure 1 is a schematic representation of the apparatus.

The dilution side of the apparatus is shown at the left in Figure 1, and consists of the female socket joint for admitting sample, a nitrogen source together with a drying column and N_2 reservoir for furnishing diluent, a long U-tube manometer for reading pressure differences, and a 100-ml dilution buret to serve as a volumetric dilution chamber.

[redacted] DWG. 14299

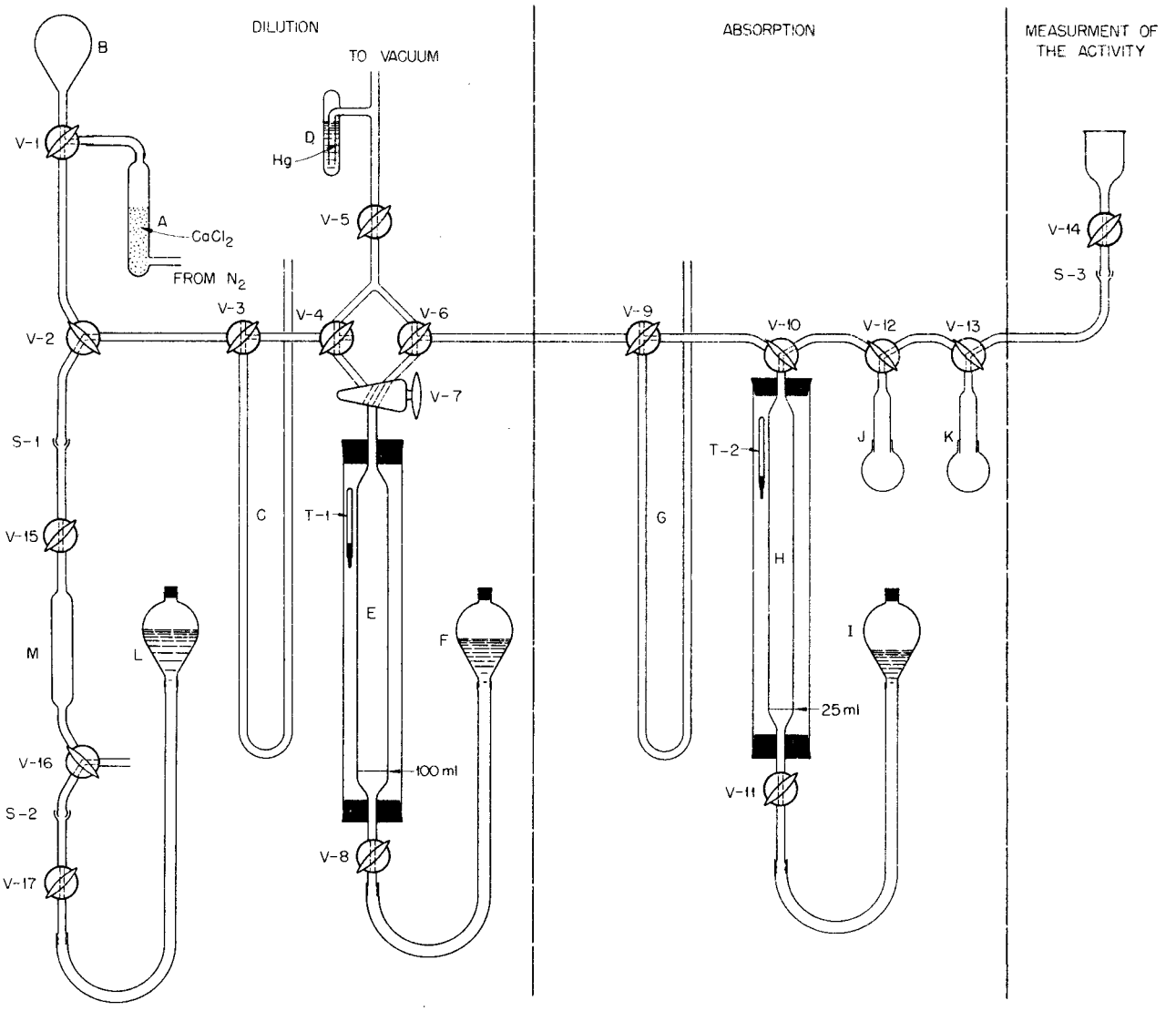

A DRYING TUBE
B N_2 RESERVOIR
C MANOMETER
D DEGREE-OF-VACUUM MANOMETER
E DILUTION BURET
F Hg RESERVOIR
G MANOMETER
H ANALYSIS BURET
I Hg RESERVOIR
J, K ABSORPTION PIPETS
L Hg RESERVOIR
M SAMPLE HOLDING TUBE
T-1, T-2 THERMOMETERS
S-1, S-2, S-3 SOCKET CONNECTIONS
V-1 - V-17 STOPCOCKS

Fig. 1. Diagram of Dissolver Off-Gas Analysis Apparatus.

The nitrogen for diluting the radioactive gas is dried by being passed through a column filled with calcium chloride or other water-absorbing chemical. This gives an inert gas which will not vary appreciably in composition and is ideal for dilution purposes. Use of the one-liter storage bulb avoids entrance of a large volume of gas into the system directly from the drying column. The sudden pressure change which would result might force off the ground-glass top of the drying column if the bulb were omitted. Also, the gas would be forced through the drying agent so rapidly that it might not be dehydrated.

The manometer is slightly over one meter long and is made of 2-mm I.D. Pyrex tubing which forms a long, narrow "U" around a meter stick. It was found that much greater ease of operation of the apparatus resulted when the manometer was provided with a capillary bore at the bottom to let the mercury flow through slowly. This avoids the splashing of mercury up into the manifold when the system is suddenly evacuated.

Calibration of the dilution buret is unique among buret calibrations in that the bore of the stopcock is included in the buret volume. This is necessary because the radioactive gas, after being turned into the dilution buret, cannot be evacuated from the stopcock bore when the manifild is cleared preparatory to the entrance of the nitrogen. The volume error involved is small but would cause a dilution error, because the total volume of radioactive gas to be diluted may be only a few times the stopcock volume. The first milliliter volume of the buret is constructed of capillary tubing in order to lengthen it to 20 to 25 cm, or about a tenth of a milliliter to the inch. The upper part of the buret is calibrated very accurately, the error being only ±0.004 ml over the entire milliliter. Less accuracy is required in the calibration of the

remainder of the buret, for it is the exceedingly small amount of radioactive gas which must be accurately measured, and not the large total dilution volume. A reading on the larger section of the buret may be in error by as much as ±0.2 ml without appreciably decreasing the precision of the dilution.

The mercury reservoir on the bottom of the buret is used to raise and lower the mercury volume inside, thus varying pressure and volume. A small degree of vacuum can be applied to the manifold without use of the pump, simply by connecting the full buret to the manifold and lowering the mercury reservoir.

The type and significance of the various parts of the dilution section of the apparatus can probably best be made clear by reviewing the method of diluting a fairly "hot" radioactive gas. Suppose that a dilution of one part of original sample to about four thousand parts of nitrogen-diluted sample is needed to bring the sample into the best working range of the counter and scaler. With the manifold open to the air at the dilution end, the buret is opened to the air and filled by raising the leveling bulb. Then the sample storage bulb (Figure 2) is attached and the manifold evacuated, with both the buret and sample storage bulb closed off. The vacuum is then turned off, and the sample turned into the manifold by opening the stopcock between the sample bulb and the manifold. The mercury levels in the two sides of the U-tube manometer are read and subtracted, the difference being in turn subtracted from atmospheric pressure to give the true pressure of the gas in the manifold. The buret is then opened to the manifold, and the mercury level allowed to fall until it reaches the 0.1 ml mark, at which point the stopcock at the bottom of the buret is closed, and the gas volume is held at 0.1 ml. Since the gas is to be diluted 1/4000, and a volume of 0.1 ml can be diluted to a total of only 100 ml in the buret, the radioactive gas in the buret must have a volume of 0.1 ml at 0.25 atm. pressure. The volume will be 0.025 ml at atmospheric pressure, so that when

UNCLASSIFIED
DWG. 19764

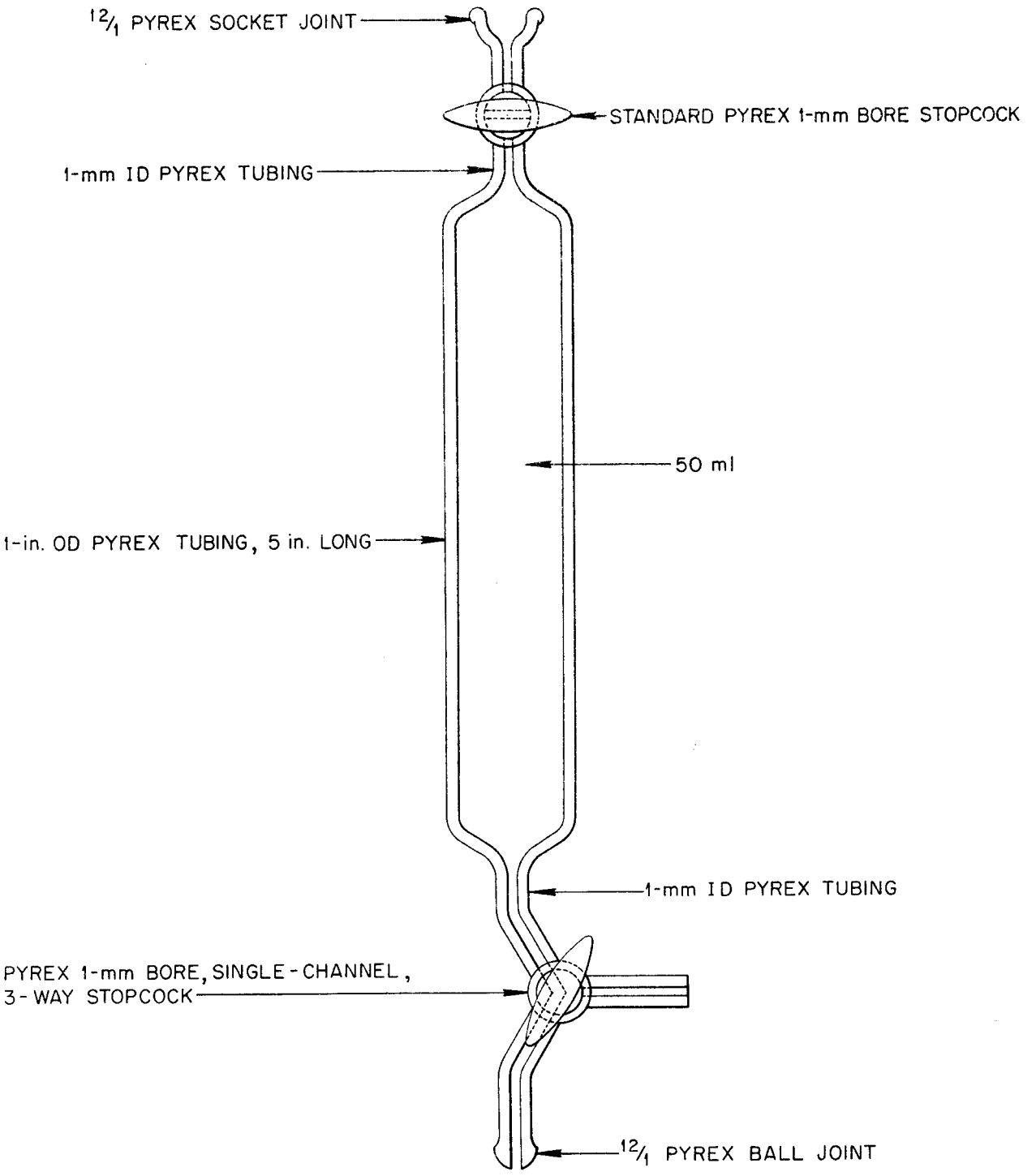

Fig. 2 – Sample Storage Bulb

the nitrogen is added to make the volume 100 ml at atmospheric pressure, the dilution will be 1/4000. A mercury leveling bulb is attached to the bottom of the sample storage bulb and raised or lowered until the difference in manometer levels indicates a pressure of 0.25 atm., at which point the buret is closed off from the manifold, and its leveling bulb is lowered, the stopcock at the bottom of the buret being open. Nitrogen is turned into the manifold as soon as the sample bulb is closed off, the manifold is evacuated, and the vacuum turned off. The nitrogen should be at or near atmospheric pressure. The buret is now opened again to the manifold, and the mercury level falls quickly as nitrogen enters. When the level falls to about the 75-ml mark, the nitrogen is turned off to the left of the manometer. The mercury level is then lowered until the 100-ml mark is reached, at which point the stopcock at the buret bottom is closed, and nitrogen is again admitted very slowly until the mercury levels in each side of the manometer are the same. The buret is closed at the top, the nitrogen is closed off, and the dilution is completed.

To insure thorough mixing of the gas with its diluent, both are passed back and forth from the buret to the sample storage bulb three or four times. The mercury reservoir at the left of the apparatus is used to force all the gas from the sample bulb back into the system. The diluted gas may now be counted or otherwise handled, and all subsequent steps in analyses take place to the right of the dilution buret (Figure 1).

B. Absorption Apparatus

The dilution section is followed by the absorption section which consists of another U-tube manometer, the 25-ml analysis buret together with a thermometer, water jacket, mercury reservoir, two absorption pipets[1], and the female socket joint which marks the right end of the assembly. Of these the

manometer is the most used element for it indicates the pressure of the gas in the counting tube attached to the socket whether or not any absorption has been done.

The analysis buret is calibrated accurately to 0.1 ml, facilitating a good volume measurement of any sample gas drawn from the dilution buret. Also, its mercury leveling bulb can be used to regulate the pressure in the entire right half of the system. This arrangement makes it possible to get a desired pressure in the sample counting tube while the dilution buret is closed off.

The absorption pipets are filled with reagents which remove radioiodide from the gas sample. A solution of 50 g of sodium thiosulfate and 5.6 g of potassium hydroxide in 100 ml of solution was used in the first pipet, and the second pipet contained 17 g of silver nitrate dissolved in 100 ml of 3 M nitric acid solution, to absorb any radioiodine vapor that was not absorbed in the first pipet. Absorption of iodine from a sample of gas is done in the following manner. First, about 25-ml of diluted sample is drawn over from the dilution buret to the analysis buret. Then the two burets are closed off, and the manifold, manometer, and sample counting tube are evacuated. The single-channel, 3-way stopcocks on the pipets are closed off, and made ready to be opened to the pipets from the left (Figure 1). The vacuum is turned off, and the single-channel, 3-way stopcock on the analysis buret is opened to the pipets, with the mercury reservoir near the top of the buret so as to put the gas under pressure. The stopcock at the left pipet top is then opened to the manifold. The gas enters suddenly, pushing down the check-valve and flowing down the small tube at the pipet center to bubble up through the reagent. When the mercury in the buret comes to the top of the buret, the leveling bulb is lowered, and the gas forced back into the buret from the pipet. As soon as most of the

gas has left the pipet, and the check-valve is seated again, the leveling bulb is again raised, and the gas again bubbles through the reagent for another "pass." After three or four passages of the gas through the first pipet, the procedure is repeated for the second pipet. Then the pipets are completely filled with reagent to exhaust all the sample, and the sample is turned into the sample counting tube, the pressure still being regulated by the leveling bulb and the analysis buret. When the manometer reads the desired pressure difference, the small stopcock on the sample counting tube is closed, and the manifold evacuated of sample. The sample, now practically free of radioiodine, is ready to count.

C. Sample Counting Tubes

The sample counting tubes (Figure 3) contain the gas while it is counted. These tubes are the last containers into which the gas is put before it is discarded.

The chamber of a tube is made of Pyrex tubing (1 in. O.D.), so that it will fit easily into the hole in an aluminum card, which in turn fits the shelves in the counting "pig" below the G-M tube. A window of mica about 6 mg/cm^2 thick covers the top of the sample counting tube. Mica of this thickness was chosen because it appeared to be the thinnest that could be used and still be durable enough to stand up under rapid and repeated evacuations. A thicker window would allow fewer beta rays to pass and thus decrease the efficiency of counting. The window is attached to a one-eighth inch flange on the top of the tube with a vacuum-stable plastic. The flange also serves to keep the tube from slipping through the hole in the aluminum card. Below the stopcock is a male fitting for a socket joint for attaching the tube to the end of the manifold.

The tubes were tested severely for durability and fatigue failures. Twenty rapid evacuations and fillings produced no noticeable damage. Since an internal pressure slightly above atmospheric will rupture the plastic seal, the tubes

UNCLASSIFIED
DWG. 19765

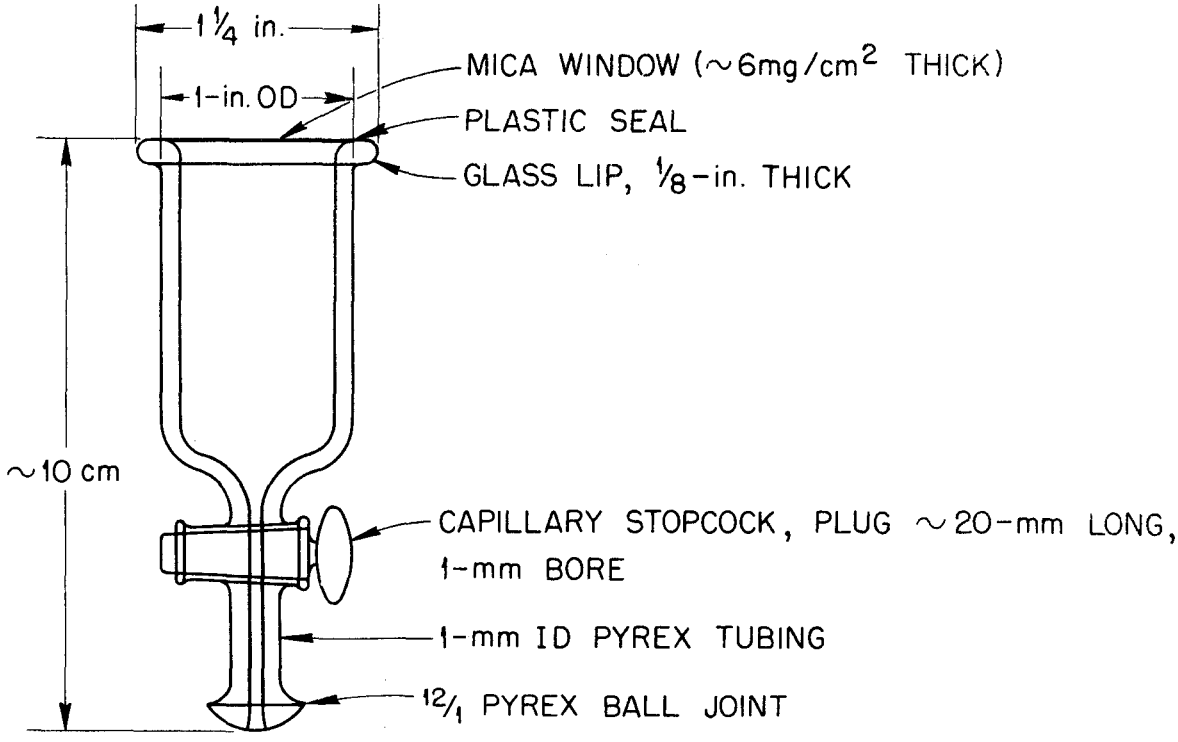

Fig. 3. Sample Counting Tube.

should be operated at or below atmospheric pressure. Failure under these conditions comes only after an extended period of use, and then the mica or plastic will crack suddenly, making a sound loud enough to be heard easily. Errors from slow window leaks are, therefore, not likely.

Two tubes were calibrated by weighing when evacuated, then filling them with water and reweighing. The density of water at room temperature was used to obtain their volumes. With two tubes of accurately known volumes, the analysis buret could be used to determine the manifold volume. Substitution of new tubes for the ones of known volume permitted calibration of the remaining tubes with the apparatus by obtaining a series of pressure-volume readings. Accuracy to the first decimal place was obtained in this way for the tube volumes.

Geometry of the tubes was determined by comparing the counting results with measurements of the undiluted original gas activity by a calibrated ion chamber. The results from counting a diluted sample in a sample counting tube were corrected for air and mica absorption, dilution, counting standard and background, pressure, and temperature. The average geometry was determined as 3.5% for Kr^{85}.

To avoid the building up of a charge of the inside of the sample counting tubes, a thin coating of graphite was painted on the surface of the top and flange section. This allowed the charge to leak off.

A small manifold (Figure 4) was built in a hood in which to empty the counted gas from the sample counting tubes and flush them with air. As many as three tubes may be cleaned simultaneously in this way. The tubes are connected to the socket joints, and the single-channel, 3-way stopcock at the vacuum line is opened first to the vacuum and then to the air as shown. Thus they are alternately filled with air and evacuated until all the radioactive

UNCLASSIFIED
DWG. 19766

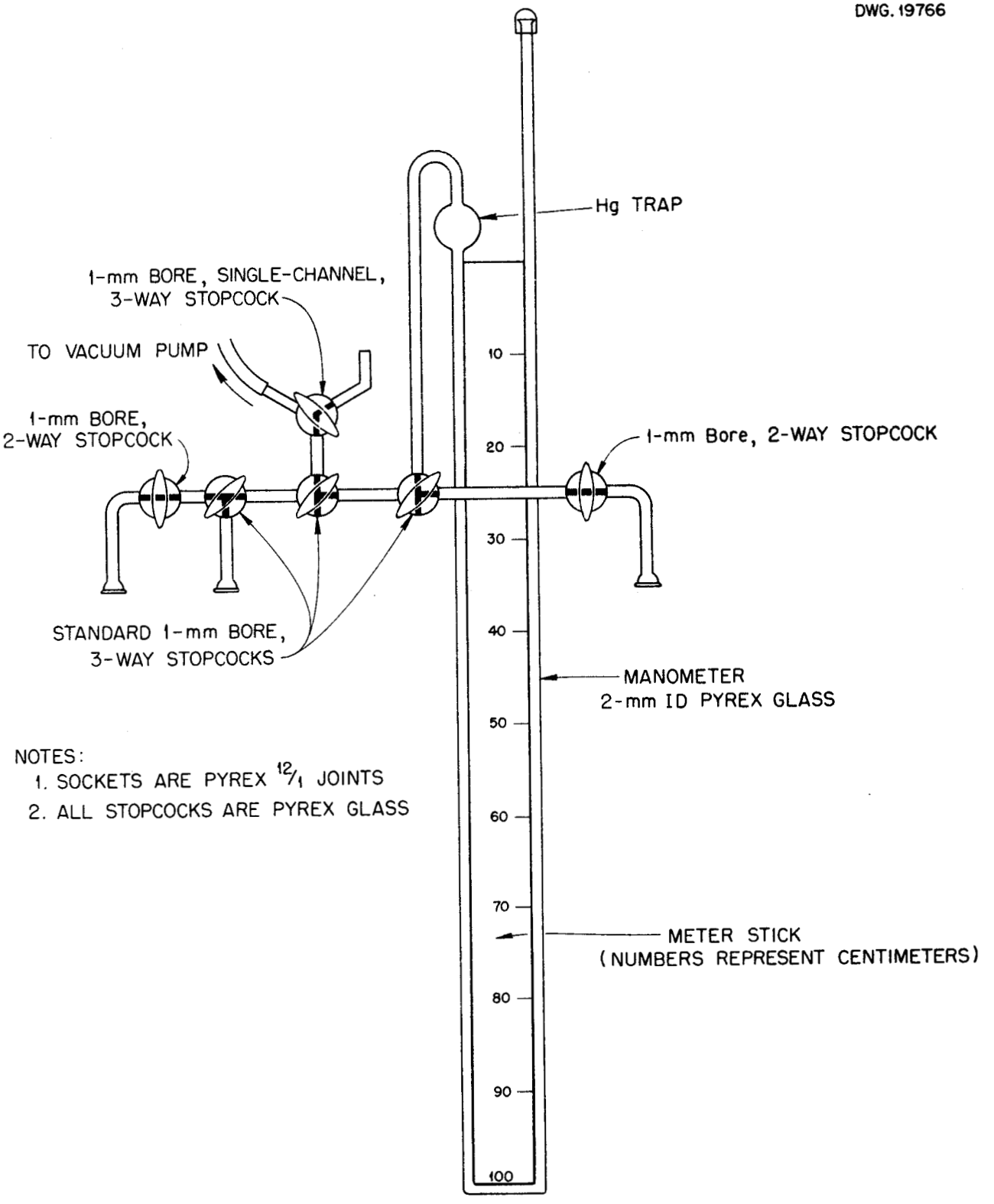

NOTES:
1. SOCKETS ARE PYREX 12/1 JOINTS
2. ALL STOPCOCKS ARE PYREX GLASS

Fig. 4. Flushing Manifold.

gas is gone. The manometer in the flushing manifold will show any leak in the sample counting tubes on the manifold if the manifold is closed off from both air and vacuum. If a leak is present, the mercury levels in the manometer tube will become the same.

D. Tests and Experiments

It was found that the counting rate of gas in a sample counting tube would vary with the pressure. A plot of counting rate corrected for volume, counting standard, background count, and temperature, against pressure was a straight line (Figure 5). This line, extrapolated back to atmospheric pressure, gave an average value for the counting rate at atmospheric pressure which was better than a count of the gas taken at atmospheric pressure. It was also easier to obtain because the fragility of the window and the plastic seal causes more damage to be done to the sample counting tubes by one count at atmospheric pressure than is caused by a great number of counts taken at sub-atmospheric pressures.

Geometry, or the fraction of total disintegrations per minute actually recorded by the "Tracerlab" tube and scaling mechanism, was naturally much different for the sample counting tubes than for ordinary methods of holding radioactive samples. This is attributable to the gaseous state of the sample, the relatively large volume it occupies (which precludes considering the sample as a point source), and the shape of the tube.

Since Tl^{204} can be put into solution and counted for beta activity in the usual manner, and since it has about the same energy as the Kr^{85} source under observation in the sample counting tube, it was decided to compare the absorption curves of the two substances. Accordingly, Kr^{85} and Tl^{204} were counted on both the second and third shelves of the counting apparatus, using a wide

UNCLASSIFIED
DWG. 19767

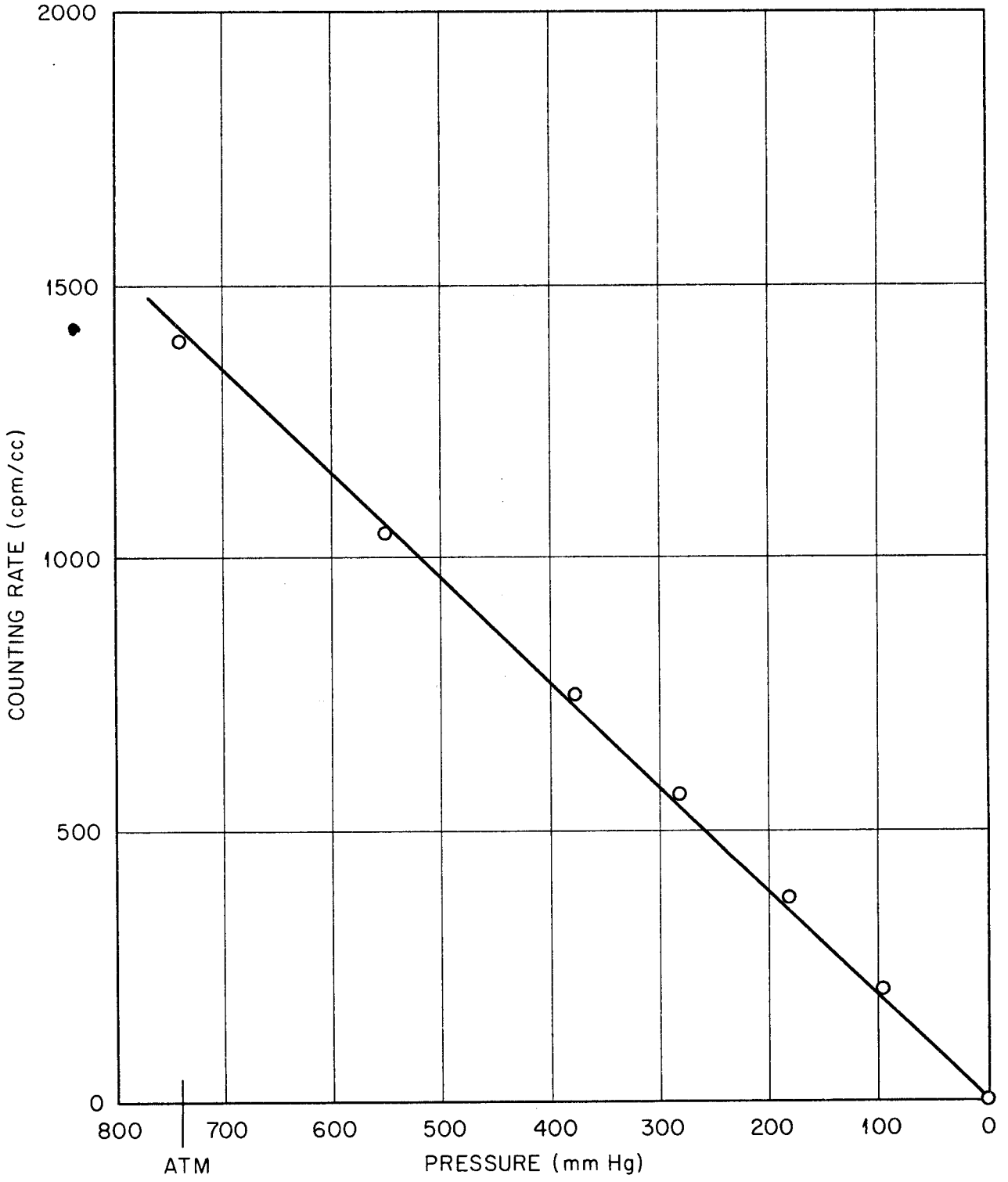

Fig. 5. Plot of Counting Rate vs. Pressure of Kr^{85}.

range of thicknesses of aluminum absorbers. The counting rates were plotted in each case against the thickness of absorber (Figures 6 and 7). Half-thickness, or the thickness needed to reduce the counting rate to half its original value, was determined for each resulting curve. A good similarity in counting conditions was shown for the two sources, since the half-thicknesses of Kr^{85} for the second and third shelves agreed closely with those for Tl^{204}.

It was decided that since the absorption properties and energies of the two radioisotopes were similar, a good estimate of geometry at various levels in the sample counting tube could be made by counting the Tl^{204} at corresponding shelves in the counting "pig." The Tl^{204} was counted at the fourth shelf, and the observed counting rate at that shelf was slightly over one fourth of the value at the second shelf. Since the fourth shelf is about the same distance from the counting tube as the bottom of the sample counting tube normally is, it was concluded that the gas at the bottom of the tube is counted at about 25% of the geometry found at the mica window.

A sample of Kr^{85} was measured for activity in an efficiency-calibrated ion chamber. No other activity was present. The result was expressed as dpm per milliliter of the sample. Then a dilution was performed on the sample. The measured counting rate was corrected to the conditions of 25°C, 760 mm Hg pressure, and zero absorber between gas and counting tube, and was multiplied by the factor of dilution. The ratio of this counted activity to the actual disintegration rate determined from the ion chamber was taken as the counting geometry. The geometry for Kr^{85} measured in this way was 3.5%.

A sample of off-gas from the ORNL iodine dissolver was taken, and tests were conducted on it with the apparatus. It was found to have a half-thickness (Figure 8) of 10 mg/cm^2 of absorber, as compared with that of about 30 mg/cm^2

UNCLASSIFIED
DWG. 19768

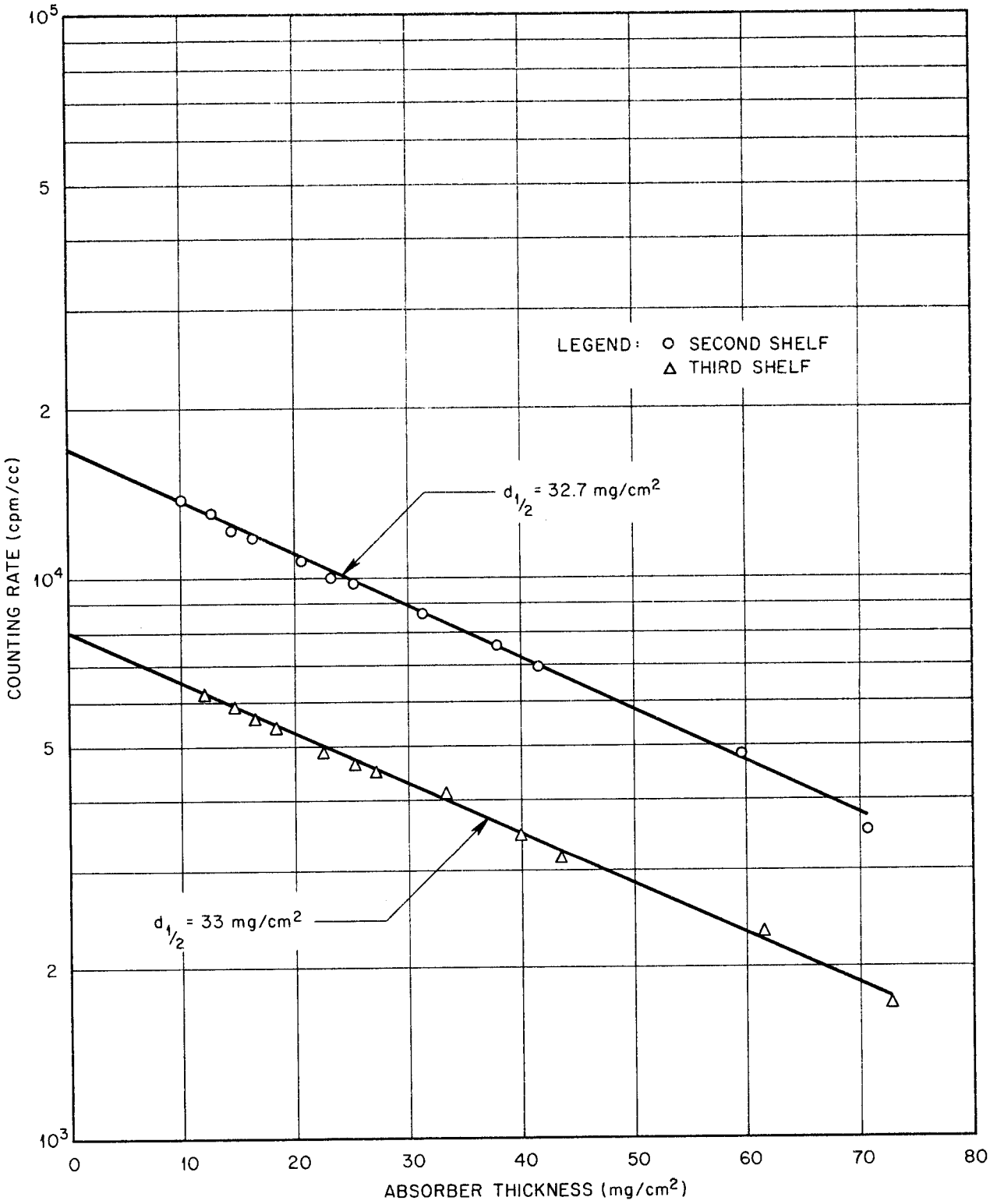

Fig. 6. Aluminum Absorption Curves for Kr^{85}.

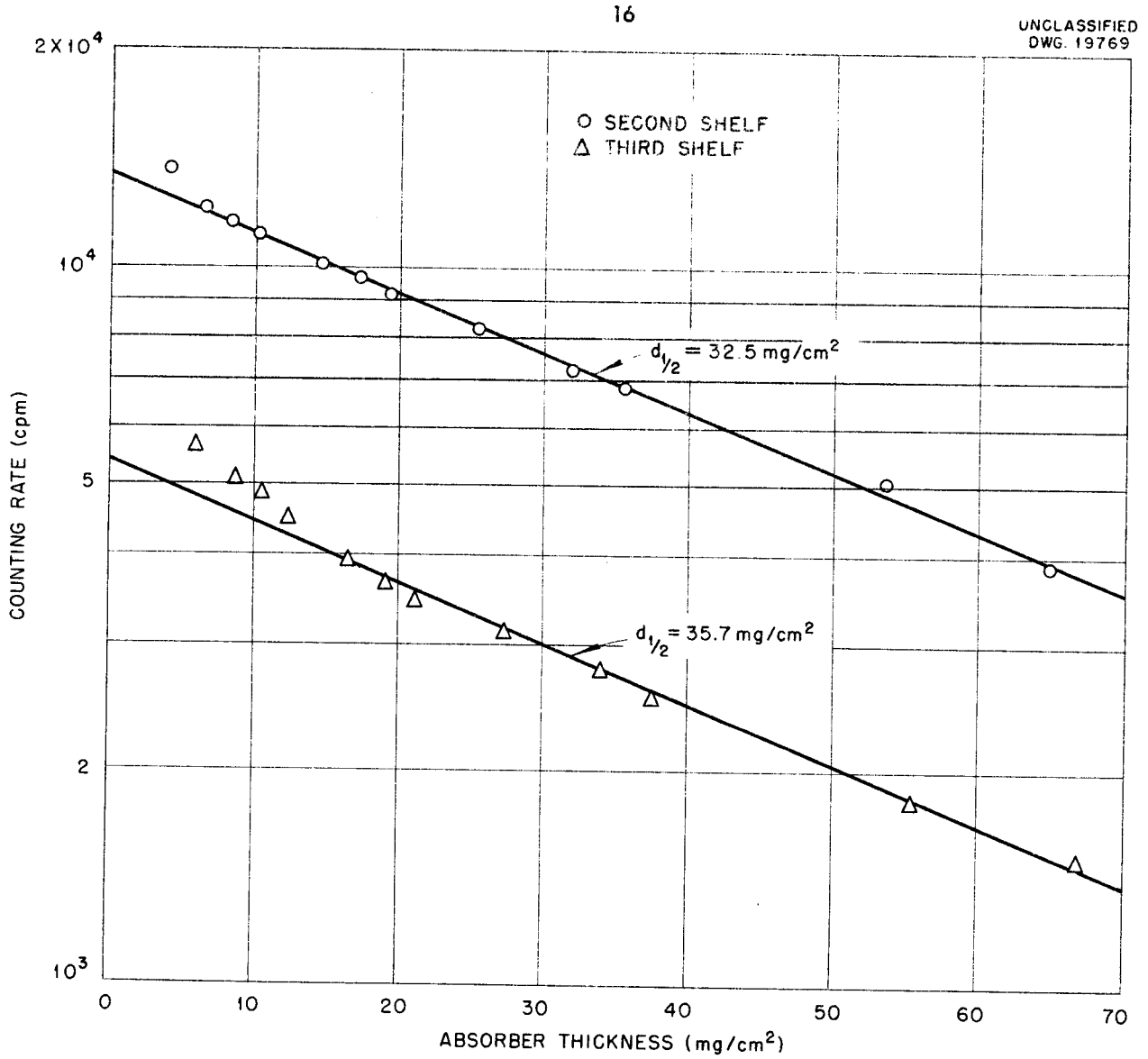

Fig. 7. Aluminum Absorption Curves for Tl^{204}.

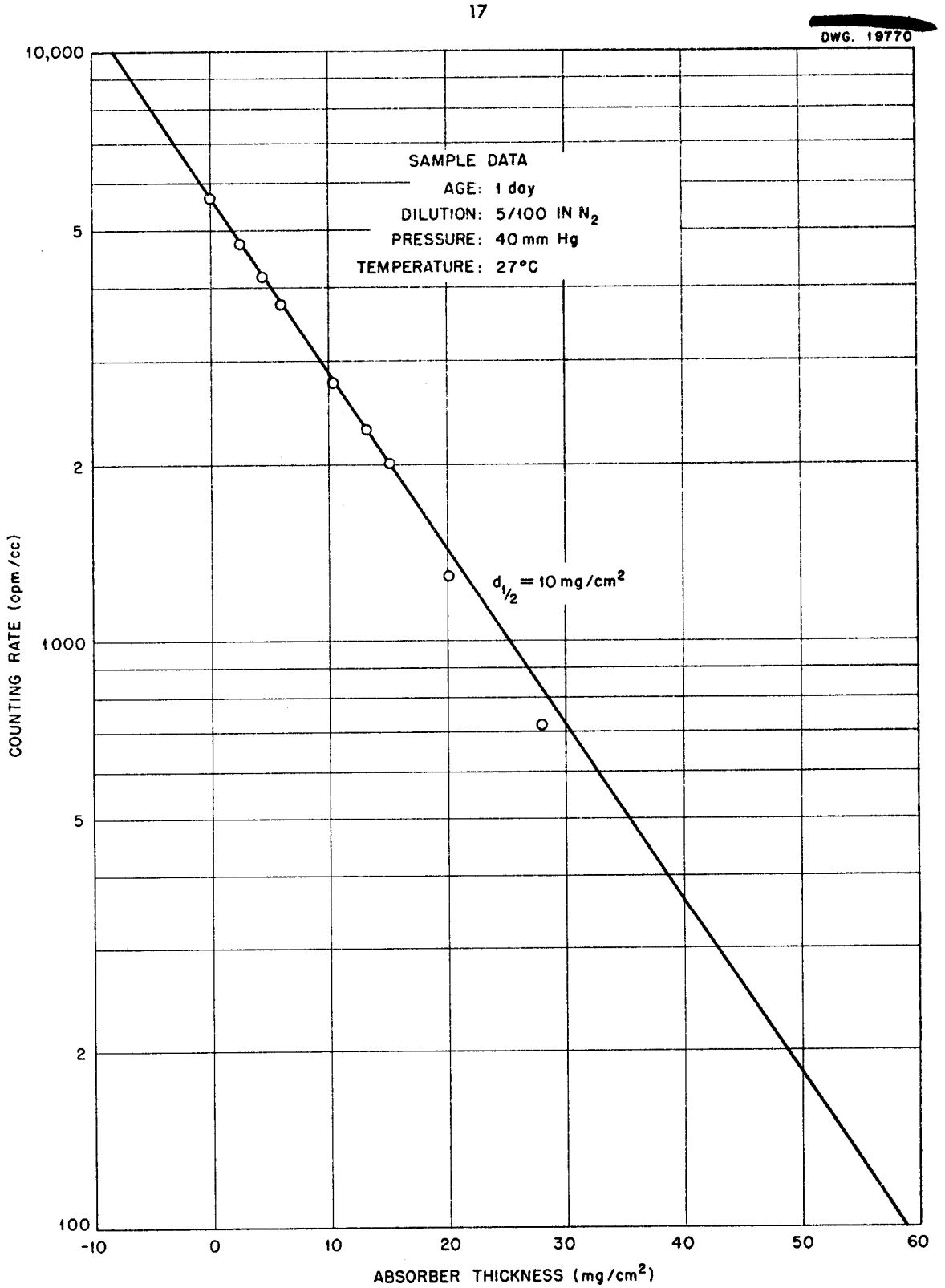

Fig. 8. Aluminum Absorption Curve for Dissolver Off-Gas.

for Kr^{85}. A sample of the dissolver gas was put in a recording ion chamber and its decay measured for nearly five days. The resulting decay curve is shown in Figure 9. The straight-line portion of the curve was caused by Xe^{133}, t1/2 = 5.3 d. By extrapolation back to zero time, one may obtain the initial activity of Xe^{133}, which was about 80 millivolts or 84.3% of total radioactivity present. The shorter-lived component died out in a few days and was probably Xe^{135} (t1/2 = 9.2 hr). A rule-of-thumb for a radioactivity decaying substance is that it will almost disappear in the space of ten half-lives. Ten half-lives of Xe^{135} make 3.8 days, and the decay curve shows effective disappearance of the short-lived activity in two days, so this activity was identified as Xe^{135}.

A mixture of Kr^{85} with the nearly pure Xe^{133} was prepared in such a way that the activity contributions were as nearly equal as possible. Two counts, three days apart, were taken of the mixture in a closed sample counting tube. The method of calculating proportions of each component is reproduced here. First, it can be stated that the activity at zero time is the sum of the activities of the two components, e.g.:

$$A_o = (A_o)_{Kr} + (A_o)_{Xe};$$

at time = t, the activity is

$$A_t = (A_t)_{Kr} + (A_t)_{Xe},$$

or, substituting from the decay law, e.g.:

$$\frac{A_t}{A_o} = e^{-\lambda t},$$

we obtain

$$A_t = (A_o)_{Kr}(e^{-\lambda t}) + (A_o)_{Xe}(e^{-\lambda t}),$$

[redacted]
DWG. 19771

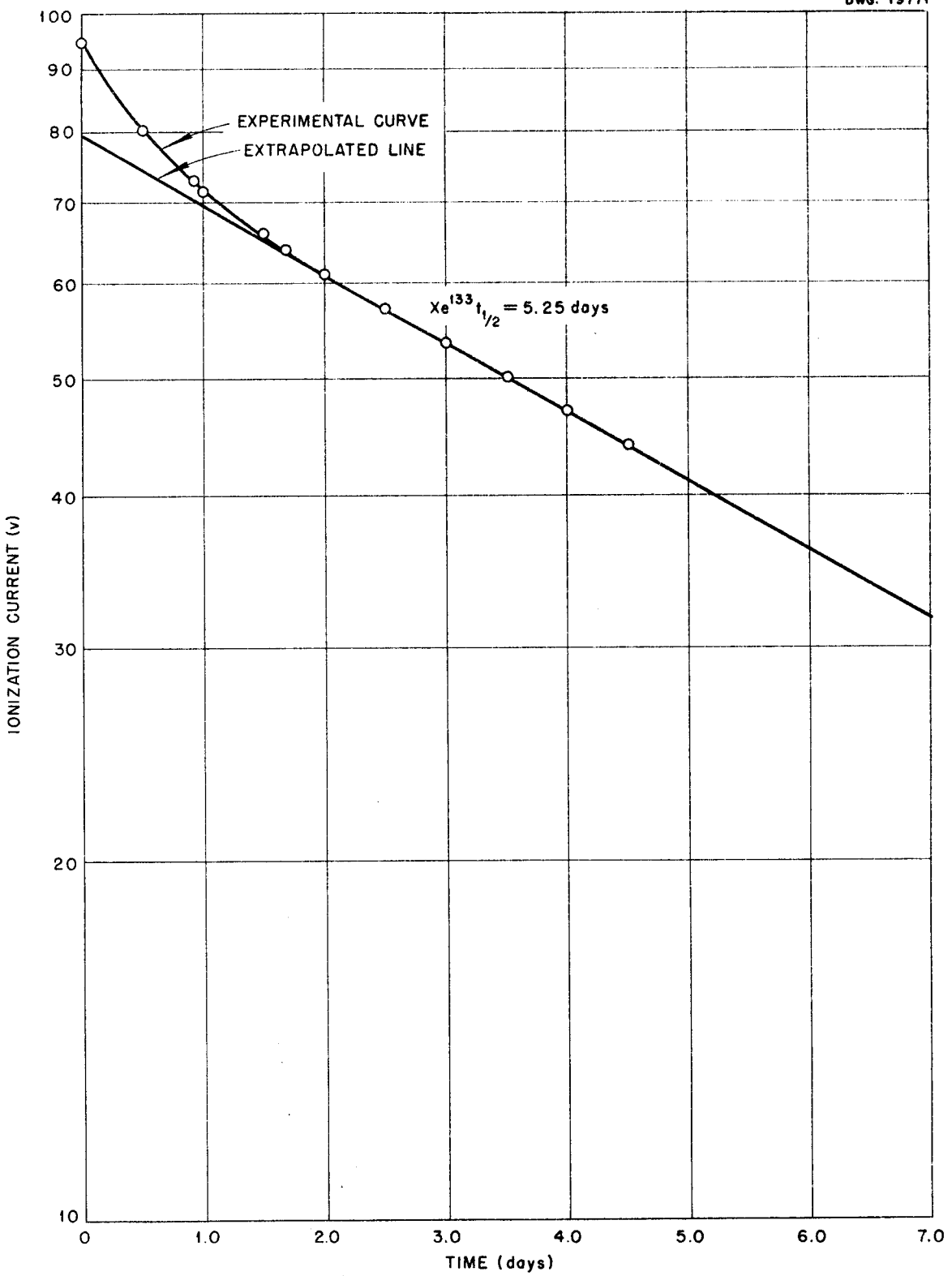

Fig. 9 Ionization Chamber Decay Curve for Dissolver Off-Gas.

where λ_1 and λ_2 are the decay constants for Kr^{85} and Xe^{133}, respectively. If the fractions of activity left at the end of three days are calculated, the results are 0.674 and Xe^{133} and very close to unity for Kr^{85}. The large fraction left for Kr^{85} is to be expected since its half-life is 9.4 y and decay was observed for only three days. The initial count was 14,573 cpm and the count after three days was 11,778 cpm. By subtracting the two activity equations we get

$$A_o = (A_o)_{Kr} + (A_o)_{Xe}$$

$$-\left[A_t = (A_o)_{Kr}(1) + (A_o)_{Xe}(.674)\right],$$

$$\text{or } A_o - A_t = (A_o)_{Xe} - (A_o)_{Xe}(.674).$$

$$\text{Then } 14{,}573 - 11{,}778 = .326(A_o)_{Xe},$$

$$\text{or } \frac{2795}{.326} = 8573 \text{ cpm(original } Xe^{133} \text{ activity)}$$

$$\text{and } 14{,}573 - 8573 = 6000 \text{ cpm(original } Kr^{85} \text{ activity).}$$

Taking into account the difference in efficiencies of counting, the values are fairly indicative of the original mixture composition.

Since the noble gases themselves are somewhat soluble in the iodine-absorbing reagents, tests were conducted to measure the loss in counting rate resulting from gas solubility. Kr^{85} was used for the tests, which consisted of counting a sample without passing it through the reagents, then pulling it back into the system and bubbling it through the reagents, and finally counting it again. Tests for counting rate loss resulting from solubility were also run using pure water. Finally, tests were made in which a sample was counted at a fixed dilution, pressure, and temperature, then discarded; and a second sample, which had been repeatedly passed through the pipets, was counted under identical conditions. Loss in counts per minute per milliliter varied from less than 1% up to about 11% in twenty-three trials, the average loss being 4.7%. No dependence of the per cent loss on pressure or temperature could be observed.

III. SUMMARY

The apparatus for counting beta activity in off-gas is described. It consists of three parts, e.g., the dilution section, the absorption section, and the sample counting tubes. The dilution apparatus provides a rapid and simple way of reducing activity concentration. The absorption section is used to absorb the iodine activity from the diluted sample. The sample counting tubes hold the gas under known conditions while it is being counted. Geometry for the sample counting tubes was determined to be 3.5% for Kr^{85}. Iodine dissolver gas was analyzed with the ion chamber, and the proportions of Xe^{133} and Xe^{135} contained in it were measured. The proportions of Kr^{85} and Xe^{133} in a mixture of the two were checked by use of the apparatus with a fair degree of accuracy. A detailed procedure for noble gas analysis is given in the Appendix.

IV. ACKNOWLEDGMENTS

Invaluable aid in furnishing samples and facilities came from G. W. Parker, J. A. Cox, and S. A. Reynolds, all of ORNL.

V. BIBLIOGRAPHY

(1) M. P. Matuszak, Fisher Gas Analysis Manual, 3rd Ed., (Fisher Scientific Co., Pittsburg, Pennsylvania).

VI. APPENDIX

Procedure Summary

1. Obtain sample from dissolver.
2. Dilute sample.
3. Mix dilution.
4. Count with GM counter getting pressure vs. counting rate curve for extrapolation to atmospheric pressure.

5. Absorb out all radioiodine and repeat step 4. Also plot an aluminum absorption curve to determine half-thickness.

6. Obtain pressure vs. counting rate curves daily for a week to get decay curve of sample radioactivity.

7. Analyze absorption curve and decay curve to get amounts and proportions of ingredients of sample.

Procedure Details (See Figure 1)

1. Draw sample in sample storage bulb, M. Close v-15 and v-16.

2. Dilution

a. Turn off v-5. Turn on vacuum pump. Close v-17.

b. Connect S-1 and S-2.

c. Close v-6 and v-7. Open v-5, v-4, v-3, and v-2 to v-3 and v-15. Leave v-15 closed.

d. When D reads maximum vacuum, close v-5, read C.

e. Open v-16 atmosphere, open v-17 and raise L until bore of v-16 is full of Hg, close v-17 leaving bore of v-16 full of Hg.

f. Check manometer pressure for leaks causing pressure loss in C while step e was done. Fix leaks found. Again open v-5 until D reads maximum vacuum. Close v-5.

g. Open v-4 between v-3 and v-7, close v-4 to v-5

h. Lower F to bottom of rod support, with v-8 open and v-7 closed.

i. Open v-15, then v-7 to v-4 and E.

j. When Hg in E falls to desired level, close v-8, open v-16 to M and v-17, open v-17, adjust to desired pressure in C with L.

k. Close v-7, draw back all gas possible into M by lowering L. Close v-15.

l. Open v-4 to v-3, v-7, and v-5. Open v-5 until D reads maximum vacuum. Close v-5, close v-4 to v-5, open v-4 to v-3 and v-7.

m. Open v-1 to A and B for a few seconds. Open v-1 to B and v-2, close to A. Open v-2 to v-1 and v-3. N_2 pressure should be atmospheric or above.

n. Lower F to bottom, open v-8.

o. Open v-7 to v-4 and E until Hg falls to 75-ml mark in E. Close v-2.

p. Lower F until Hg falls to 100-ml mark, close v-8. Open v-2 to v-1 and v-3 slowly until two Hg levels in C are equal, close v-7 and v-2, open v-8.

q. Open v-4 to v-5, v-3, and v-7. Open v-5 until D reads maximum vacuum, close v-5.

3. Mixing

a. Draw Hg out of M with L. When Hg reaches bore of v-16, turn v-16 to atmosphere. Lower Hg past v-17, close v-17.

b. Close v-2. Disconnect S-1 and S-2, put on empty M, connect at S-1 and S-2.

c. Open v-5. Open v-2 to v-3 and v-15, open v-15 with v-16 closed. Close v-5.

d. Repeat steps 2e, 2f, and 2g.

e. Open v-7 to v-4 and E. Raise and lower F three or four times. Lower F to bottom, open v-16 to M, open v-17 and raise L until Hg fills M, close v-15.

f. Draw all gas possible back into E by lowering F. Close v-7.

g. Open v-4 to v-5, v-3, and v-7. Open v-5 until D reads maximum vacuum. Close v-5.

4. Counting Diluted Sample (no absorption)

a. Connect S-3, open v-14, open v-13 to v-14 and v-12, open v-12 to v-13 and v-10, open v-12 to v-12 and v-9, open v-9 to v-10, G, and v-6, open v-6 to v-5, v-7, and v-9, close v-4 and open v-5 until D reads maximum vacuum, close v-5.

b. Draw all gas possible back into E with F, close v-7, open v-6 to v-5, v-7, and v-9, open v-5 until D reads maximum vacuum, close v-13 and v-5.

c. Disconnect S-3, insert tube in counter, and count. Record time, date, sample no., sample counting tube no., pressure, temperature, dilution, and counting rate.

d. Correct counting rate to cpm/ml corrected for background and counting standard at 25°C.

e. Repeat step 4a through step 4e for three additional pressures; e.g., 200 mm, 400 mm, and 600 mm. Plot pressure vs. corrected counting rate, extrapolate to 760 mm of Hg, correct for absorber and geometry. Report result.

5. Aluminum Absorption Curve

a. Count sample having highest counting rate as shown by 4 under wide range of absorbers until count is absorbed down nearly to background.

b. Plot counts per minute, corrected for counting standard and background, against absorber thickness.

c. Extrapolate any straight-line portion to left margin, obtaining the true count at true zero absorber to get proportions of radioactive gases.

6. Counting Diluted Sample After Radioiodine Absorption

a. Open v-13 to S-3 and v-12, open S-3 to air.

b. Open v-10 to H and v-12, v-12 to v-13 and v-10, raise I with v-11 open until H is nearly full of Hg, open v-13 to v-12 and K, lower I to fill K, close v-13.

c. Open v-13 to S-3 and v-12, again raise I to fill H, open V-12 to v-10 and J, lower I to fill J, close v-12.

d. Open v-12 to v-13 and v-10, completely fill H, open v-10 to v-9 and v-12, make connection S-3, open v-9 to v-6, v-10, and G, open v-6 to v-5, v-7, and v-9.

e. Open v-5 until D reads maximum vacuum, close v-5, test as before for leaks.

f. Open v-6 to v-7 and v-9, close v-6 to v-5, close v-13, v-12, and v-10 by turning left.

g. Open v-7 to E and v-6, open v-10 to H and v-9, adjust volume and pressure with I and F. Put about 20 ml of gas at atmospheric pressure into H.

h. Close v-10 by turning to left, draw back all gas possible into E with F, close v-7, open v-6 to v-5, v-7, and v-9, open v-5 until D reads maximum vacuum, close v-5. Open v-9 to v-10 and G, close v-9 to v-6.

i. Raise I, open v-10 to H and v-12, open v-12 to J and v-10, lower I when gas has bubbled through until gas has left J; again raise I. Bubble gas through J three or four times.

j. Completely fill J, open v-12 to v-13 and v-10, raise I and open v-13 to v-12 and K. Bubble gas through K three or four times in same manner as through J.

k. Fill K, lower I, open v-13 to v-12 and S-3, adjust pressure with I by turning v-10. Read pressure on G, temperature on T-2. Close v-14.

l. Open v-9 to v-10, G, and v-6. Open v-10 to v-9 and v-12. Open v-6 to v-5, v-7, and v-9. Open v-5 until D reads maximum vacuum, close v-13 and v-5.

m. Run pressure vs. counting rate plot as in step 4; also run absorption curve as in step 5 to get proportions of noble gases.

7. Decay Curve

a. Plot curves of pressure vs. counting rate daily for a week.

b. Extrapolate in each case to get counting rate at atmospheric pressure.

c. Plot counting rate at atmospheric pressure vs. day of week, obtaining decay curve. Analyze for proportions of gases in same manner as is done with absorption curves.

[redacted]

[redacted]

[redacted]