[redacted]

ORNL MASTER COPY

ORNL-1474
Progress

Classification Cancelled
~~Or Changed To~~
By Authority Of
By
Date SEP 13 1971

CLASSIFICATION CANCELLED
(DOE Review Order)
DATE JUL 12 1979
LOCATION OF SUPPORT
OAK RIDGE NATIONAL LABORATORY
AUTHORITY DELEGATED BY ERDA 8-15-77

ANALYTICAL CHEMISTRY DIVISION

QUARTERLY PROGRESS REPORT

FOR PERIOD ENDING JANUARY 10, 1953

SPECIAL REREVIEW FINAL DETERMINATION
CLASS. ____ AUTH. ____
REVIEWERS/VERIFIERS CLASS. DATE
(1) D Baker U 7-12-79
(2) A Boleky U 6/13/80

OAK RIDGE NATIONAL LABORATORY
OPERATED BY
CARBIDE AND CARBON CHEMICALS COMPANY
A DIVISION OF UNION CARBIDE AND CARBON CORPORATION

UCC

POST OFFICE BOX P
OAK RIDGE, TENNESSEE

[redacted]

[redacted]

CENTRAL RESEARCH LIBRARY
DOCUMENT COLLECTION

[redacted]

MARTIN MARIETTA ENERGY SYSTEMS LIBRARIES
3 4456 0353188 1

ORNL-1474
Progress
5a

CENTRAL RESEARCH LIBRARY
DOCUMENT COLLECTION
LIBRARY LOAN COPY
DO NOT TRANSFER TO ANOTHER PERSON
If you wish someone else to see this document, send in name with document and the library will arrange a loan.

ANALYTICAL CHEMISTRY DIVISION

QUARTERLY PROGRESS REPORT

FOR PERIOD ENDING JANUARY 10, 1953

LABORATORY RECORDS
1954

AEC RESEARCH AND DEVELOPMENT REPORT

OAK RIDGE NATIONAL LABORATORY • U.S. ATOMIC ENERGY COMMISSION •

Classification Cancelled
Or Changed To
By Authority Of AEC 9.13.71
By E. Goldberg Date 11.10.71

OAK RIDGE NATIONAL LABORATORY
OPERATED BY
CARBIDE AND CARBON CHEMICALS COMPANY
A DIVISION OF UNION CARBIDE AND CARBON CORPORATION
UCC
POST OFFICE BOX P
OAK RIDGE, TENNESSEE

RESTRICTED DATA
This document contains Restricted Data as defined in the Atomic Energy Act of 1946. Its transmittal or the disclosure of its contents in any manner to an unauthorized person is prohibited.

[redacted]

[redacted]

ORNL-1474

This document consists of 70 pages.
Copy 5 of 141 copies. Series A.

Contract No. W-7405-eng-26

ANALYTICAL CHEMISTRY DIVISION

QUARTERLY PROGRESS REPORT

For Period Ending January 10, 1953

M. T. Kelley, Director
C. D. Susano, Associate Director

DATE ISSUED

MAR 11 1953

OAK RIDGE NATIONAL LABORATORY
Operated by
CARBIDE AND CARBON CHEMICALS COMPANY
A Division of Union Carbide and Carbon Corporation
Post Office Box P
Oak Ridge, Tennessee

[redacted]

MARTIN MARIETTA ENERGY SYSTEMS LIBRARIES
3 4456 0353188 1

[redacted]

INTERNAL DISTRIBUTION

1. C. E. Center
2. Biology Library
3. Health Physics Library
4. Reactor Experimental Engineering Library
5-6. Central Research Library
7-12. Central Files
13. C. E. Larson
14. W. B. Humes (K-25)
15. L. B. Emlet (Y-12)
16. A. M. Weinberg
17. J. A. Swartout
18. E. D. Shipley
19. E. J. Murphy
20. F. C. VonderLage
21. M. T. Kelley
22. E. H. Taylor
23. A. H. Snell
24. F. L. Steahly
25. S. C. Lind
26. R. C. Briant
27. J. S. Felton
28. C. E. Winters
29. A. Hollaender
30. K. Z. Morgan
31. C. P. Keim
32. G. H. Clewett
33. A. S. Householder
34. D. W. Cardwell
35. E. M. King
36. C. D. Susano
37. G. E. Boyd
38. R. B. Briggs
39. G. W. Parker
40. L. J. Brady
41. H. P. House
42. O. Menis
43. C. H. Secoy
44. L. E. Burkhart
45. R. N. Lyon
46. S. A. Reynolds
47. P. F. Thomason
48. R. Rowan, Jr.
49. D. E. LaValle
50. A. R. Brosi
51. A. F. Roemer, Jr.
52. E. I. Wyatt
53. G. W. Leddicotte
54. C. Feldman
55. T. E. Willmarth
56. C. L. Burros
57. J. H. Edgerton
58. L. T. Corbin
59. D. D. Cowen
60. P. M. Reyling
61. S. D. Schiffman (K-25)
62. H. P. Raaen
63. J. C. White
64. W. K. Miller
65. U. Koskela
66. D. J. Fisher
67. G. C. Williams
68. E. P. Wigner (consultant)

[redacted]

[redacted]

EXTERNAL DISTRIBUTION

69-76. Argonne National Laboratory
77-81. Atomic Energy Commission, Washington
82-85. Brookhaven National Laboratory
86-89. Knolls Atomic Power Laboratory
90-96. General Electric Company, Richland (1 copy to A. H. Bushey)
97-100. Los Alamos Scientific Laboratory
101. Mound Laboratory
102-104. New York Operations Office
105. Patent Branch, Washington
106-120. Technical Information Service, Oak Ridge
121-124. University of California Radiation Laboratory
125-128. Carbide and Carbon Chemicals Company (Y-12 Plant)
129-132. duPont Company
133-134. New Brunswick Laboratory
135. Savannah River Operations Office, Wilmington
136-137. Westinghouse Electric Corporation
138-140. Idaho Operations Office (1 copy to Phillips Petroleum)
141. North American Aviation, Inc.

[redacted]

[redacted]

Reports previously issued in this series are as follows:

ORNL-686	Period Ending March 31, 1950
ORNL-788	Period Ending June 30, 1950
ORNL-867	Period Ending October 10, 1950
ORNL-955	Period Ending January 10, 1951
ORNL-1088	Period Ending March 26, 1951
ORNL-1113	Period Ending June 26, 1951
ORNL-1129	Period Ending September 10, 1951
ORNL-1233	Period Ending December 26, 1951
ORNL-1276	Period Ending March 26, 1952
ORNL-1361	Period Ending June 26, 1952
ORNL-1423	Period Ending September 26, 1952

[redacted]

[redacted]

CONTENTS

Page

ABSTRACT ix

PUBLICATIONS xii

ANALYTICAL CHEMISTRY DIVISION - X-10 SITE

RESEARCH AND DEVELOPMENT 1

Ionic Analyses 1

Automatic derivative polarographic titration of uranium and iron with ceric sulfate 1

Evaluation of the new model Q-1338, series no. 1, derivative polarograph 4

Polarography of uranium in nitric acid solution 4

Separation of uranium from other metals by filter paper partition chromatography 5

Separation of mercury from other metals by filter paper partition chromatography 5

Separation of protactinium-233, zirconium-95 and niobium-95 from thorex process solutions and uranium-233 product 5

Colorimetric estimation of nitrate in the presence of uranium . . . 6

Simultaneous spectrophotometric determination of copper, cobalt, and nickel as diethyldithiocarbamates 6

Electrolytic removal of iron from sulfate solutions of plutonium by use of a mercury-coated silver cathode 6

ORNL Master Analytical Manual 7

Analytical Instrumentation 8

Development of an automatically recording, internal-standard, flame photometer. III. Evaluation 8

Revision of gating circuit of ORNL model Q-945 automatic titrator . 10

Revision of ORNL model Q-983 automatic curve-follower installed in a Q-1160 high-sensitivity polarograph 11

Analytical applications of high-frequency oscillators. II. ORNL Gridos 12

Microelectrode assembly for pH measurements 14

Radiochemical Analyses 15

Nuclear properties 15

Decay scheme of cerium-141 15

[redacted]

[redacted]

Gamma energies and half life of cesium-136 15
Neutron cross sections for production of scandium-46 and strontium-85 15
Experimental search for long-lived titanium-51 15

Instrumental analyses 16

Gamma- and x-ray spectrometry applied to analytical radiochemical problems. 16
Determination of niobium-95 and zirconium-95 in the presence of protactinium-233 16
Identifications of activities in waste and unknown solutions . . 16
Efficiency of thallium-activated sodium iodide gamma-ray spectrometer 16

Analysis of radioisotopes 17
Determination of actinides 17
Paper chromatography 18
Examination of radioisotope products for gamma-emitting contaminants 18

Fission products 18
Zirconium and niobium in Thorex samples 18

Analysis for heavy elements 19
Plutonium analysis by alpha counting 19
Determination of actinides in radioisotopes 20
Rapid method for UX in uranium solutions 21
Miscellaneous analyses 21

Analysis of cyclotron products 22

HRP analyses 22
Neutron flux determination of HR No. 1 22

Ion exchange and chromatography 23
Analysis for rare earth activities in barium-140-lanthanum-140 . 23
Application of paper chromatography in radioisotope analysis . . 23

Activation Analysis 23

Determination of trace quantities of the rare-earth elements 23
Determination of trace quantities of rare-earth elements in metals and animal tissue 25
Determination of trace quantities of cobalt, arsenic, and strontium in animal tissue 25
Determination of trace elements in soils and water 26
Determination of trace amounts of aluminum in rubber 27
New applications of neutron radioactivation analysis 27

Spectrochemical Analyses 28

[redacted]

[redacted]

Determination of rare earths in thorium 28
Determination of rare earths in stainless steel 28
Determination of traces of boron 29
Determination of traces of precious metals in native iron 29

Inorganic Preparations 30

Solid solutions of uranium trihalides in lanthanum halides 30
Chromium metal from Cr_2O_3 30
Purifications and preparations 31

Optical and Electron Microscopy 31

SERVICE ANALYSES 35

Ionic Analyses 35

Radiochemical Analyses 35

Activation Analyses 35

General Radiochemical Analyses 35

General Analysis Laboratory 35

Determination of nitrate nitrogen in uranium oxides and uranyl sulfate 35
Ion-exchange separation of calcium and uranium 36
Observed interference in potentiometric titration of uranium by use of the ORNL automatic titrator 37

Laboratory and Semi-Works Control 37

Pilot Plant Control 38

HRE Analyses 40

Isolation Analyses 40

ANALYTICAL CHEMISTRY DIVISION - Y-12 SITE

RESEARCH AND DEVELOPMENT 41

Analytical Studies of Reactor Fuels and Their Components 41

Analytical Studies for the Raw Materials Program 41

Indirect ferrous-*o*-phenanthroline colorimetric determination of uranium 41
Separation of uranium by partition chromatography 42

[redacted]

[redacted]

Microdetermination of carbon and hydrogen in organophosphorus compounds 43
Titration of amines in nonaqueous solvents 43
Fluorometric determination of uranium 45
Kjeldahl determination of milligram amounts of amines 45

Analytical Studies for the Homogeneous Reactor Program 45

Potentiometric determination of uranium(VI) 45
Determination of uranium-to-sulfate and uranium-to-fluoride ratios . 46
Determination of uranium(IV) in uranyl oxide 46
Determination of microgram quantities of fluoride in uranyl solutions 47
Determination of microgram quantities of zirconium in uranyl solutions 48
Determination of traces of nitrate in uranyl oxide 49
Additions to the photomultiplier tube attachment for the Beckman spectrophotometer 49

Quality Control 49

General Analytical Chemistry Laboratory 50
HRP Analytical Chemistry Laboratory 50
ANP Analytical Laboratory 50
Analytical chemistry laboratories 55

SERVICE ANALYSES 56

Analytical Services for ANP Project 56

Analysis of NaK for beryllium 56
Gravimetric determination of zirconium 56
Analysis of uranium tetrachloride 56
Impurities in lead 56
Analysis of alkali hydroxides 56
Work for General Electric Co. 56
Backlog of samples 56

Analysis of Ores and Related Materials 56

Analytical Services for HRP 58

Miscellaneous Analyses 58

[redacted]

[redacted]

ABSTRACT

ANALYTICAL CHEMISTRY DIVISION
X-10 SITE

The development of ionic analytical methods has included the filter-paper-partition chromatographic separation of Pa^{233}, Zr^{95}, and Nb^{95} from Thorex process solutions. The chromatographic separation of uranium from other metals has been studied with eight additional radionuclides. The study of a similar chromatographic separation of mercury from other metals is in progress. A colorimetric method for the determination of nitrate in uranium oxides is proposed. The new, model Q-1338, series No. 1, derivative polarograph has been received and the evaluation program is outlined. The derivative polarographic electrode system of Reilley, Cooke, and Furman has been applied to the determination of uranium and iron, contained in the same solution, by use of the ORNL model Q-945 automatic titrator. The status of the ORNL Master Analytical Manual is indicated.

Research on analytical instrumentation has included additional developmental work on the automatically recording, internal-standard, flame photometer. The absorption filter of the internal-standard optical system was replaced by an interference filter that reflects rather than absorbs light that it does not pass, thus minimizing heat build-up. A monochromator that employs a wedge-type interference filter is being built. Experimental results that contrast single-beam and double-beam operations of the flame photometer are discussed and functional diagrams are shown. Also, the gating circuit of the ORNL model Q-945 automatic titrator was revised to facilitate the setting of the diode-adjust potentiometer. A diagram of the revised circuit is given. The circuit of the ORNL model Q-983 curve-follower has been revised to increase the stability and sensitivity. The revision is shown diagramatically. Design problems encountered in the work on analytical applications of the ORNL Gridos are discussed. A microelectrode assembly for the measurement of the pH of small volumes of highly radioactive solutions is described. Incorporation of a glass capillary in the indicator electrode eliminates the need for a sample container. The assembly is inexpensive, expendable, and can be used by remote control. A diagram is given.

Radiochemical research has contributed some data on the decay scheme of Ce^{141}. Gamma radiations of 0.83- and 1.06-Mev energies have been found in Cs^{136}. The neutron cross sections for the production of Sc^{46} and Sr^{85} have been found to be 21.6 and 1.2 barns, respectively. The cross section for the production of a long-lived Ti^{51} isomer is believed to be less than 10^{-5} barn, on the basis of preliminary experiments. The use of gamma- and x-ray spectrometers is increasing for direct radiochemical analysis without previous chemical separations. Further work is reported on the determination of plutonium by alpha counting and on the measurement of alpha emitters (actinides) in radioisotope products.

[redacted]

[redacted]

Methods are being developed for the difficult determination of Zr and Nb in the presence of Pa^{233}. A method has been completed for determining the HRE flux by measurement of the Cs^{136} yield. Some applications of ion exchange and paper chromatography are presented.

A report is made of the application of radioactivation analysis to the determination of trace amounts of rare-earth elements in metals and animal tissue; cobalt, strontium, and arsenic in animal tissue; molybdenum and uranium in soil, river mud, and water; and aluminum in rubber. Routine determinations of sodium, barium, uranium, and vanadium in various materials are described. Also, new applications of the method that have been suggested by inquiries from the public are mentioned.

Spectrochemical procedures are described for the determination of rare earths in thorium and stainless steel, of traces of boron in graphite and aluminum, and of precious metals in native iron.

An improved procedure is reported for the preparation of $LaCl_3$ for use in studies of solid solutions of uranium trihalides in lanthanum halides. Also, a solid solution of UF_3 in $LaCl_3$ was made. Metallic chromium was prepared from Cr_2O_3 for use in the proposed study of stable chromium isotopes by the Physics Division.

Optical and electron microscopy were employed to show the nature of lamellar pearlite in the nodular structure of type B-23 steel. Evidence was acquired that shows that etching time is critical in the replication of surface detail of a metal that contains more than one constituent.

Special problems encountered in the service analytical work are discussed, and a tabular summary of the work is given. Procedures are described for the determination of nitrates in uranium oxides and uranyl sulfate and the ion-exchange separation of calcium and uranium and of uranium and thorium. The possibility of a plutonium quenching effect on the fluorometric determination of uranium is indicated. A solvent-extraction procedure for the removal of zirconium and niobium from plutonium in the analysis of Purex process samples is described.

ANALYTICAL CHEMISTRY DIVISION
Y-12 SITE

Analytical Studies for the ANP program have been of a diversified nature during this period, with primary interest given to the development of a volumetric method for the determination of zirconium. Also, methods have been adapted for the identification and determination of impurities in the proposed ARE fuel eutectic ($NaF-ZrF_4-UF_4$) and its components.

Relative to the Raw Materials program, an indirect method for the determination of uranium has been developed. This method is based on the measurement of the ferrous-*o*-phenanthroline complex formed when uranium(VI) reduces iron(III) in the presence of the complexing agent. An apparatus for the separation of uranium in Bartow-clay solutions by means of partition chromatography has been assembled. Application of this technique to other phosphatic-base materials indicated that the method was

[redacted]

[redacted]

empirical with respect to the constituents present. The titration of high-molecular-weight amines in nonaqueous solvents has been shown to be a versatile, sensitive, and accurate method for their determination.

An investigation of the precision of the potentiometric determination of uranium(VI) in the presence of trace quantities of iron(III) and chromium(VI), is under way. The contemplated chloranilic acid method for the determination of uranium(IV) has proved to be promising. Improved precision and sensitivity were obtained by use of Chrome Azurol S dye for the determination of traces of fluoride in uranyl sulfate solutions. Work on the determinations of traces of zirconium and nitrate in uranyl solutions has also continued. Modifications of the photomultiplier tube attachment for the Beckman spectrophotometer have been made to increase the sensitivity of the instrument.

Statistical analyses have been made of quality control data for 72 types of determinations. A tabular summary of results is presented.

The analytical work for the ANP, HRP, and Raw Materials projects, and other miscellaneous services are reviewed briefly. A total of 32,475 determinations was made by 48 analysts. A tabulation of the distribution of personnel and work is given.

[redacted]

[redacted]

PUBLICATIONS

M. L. Druschel, O. Menis, and R. Rowan, Jr., *Modifications of the Dimethylglyoxime Method for the Colorimetric Determination of Nickel Based on the Use of Potassium Persulfate as the Oxidant*, ORNL-1430 (Nov. 3, 1952).

H. P. House, *Analysis of South Dakota Lignite*, Y-B31-396 (Dec. 11, 1952).

[redacted]

ANALYTICAL CHEMISTRY DIVISION — X-10 SITE

RESEARCH AND DEVELOPMENT

IONIC ANALYSES

P. F. Thomason

Automatic Derivative Polarographic Titration of Uranium and Iron with Ceric Sulfate (A. D. Horton, P. F. Thomason, M. T. Kelley). Reilley, Cooke, and Furman [1] have made a detailed study of derivative polarographic titrations in which a model G Beckman pH meter was used to indicate the potential changes at the end points of the titrations. A constant current of about 2 μa was applied to the two platinum electrodes in the titrating vessel by means of a 45-volt B battery connected in series with a 20-megohm resistor.

In the studies, iron(III) and vanadium(V) were determined by reducing them to iron(II) and vanadium(IV) by means of a lead reductor and then titrating with ceric sulfate solution. The method is reported to give very sharp potential changes at the end points, as compared with the gradual changes that occur at potentiometric end points.

Exploratory studies have been made to determine the feasibility of the use of the ORNL model Q-945 automatic titrator that has the gate circuit[2] for the derivative polarographic titration of iron as an impurity in uranium. Four conditions that may effect this determination have been proposed. First, uranium(VI) would be reduced to uranium(IV) and iron(III) would be reduced to iron(II) by the addition of an excess of chromium(II). The chromium(II) would be prepared by passing a saturated solution of chromium potassium sulfate through a Jones reductor. Second, gold instead of platinum electrodes would be used in the titration vessel because there is a tendency for platinum to catalyze the oxidation of chromium(II) by hydrogen ions. Third, the constant current to the electrodes would be about 2 μa and the titrant would be ceric sulfate solution. These conditions are the same as those in the work of Reilley, Cooke, and Furman.[1] Fourth, the titration, if successful, would include Redox-step titrations of chromium(II) to chromium(III), uranium(IV) to uranium(VI), and iron(II) to iron(III).

Solid $FeSO_4 \cdot (NH_4)_2SO_4 \cdot 6H_2O$ and a gravimetrically standardized solution of UO_2SO_4 that contained 298.7 mg of uranium(VI) per milliliter were used to prepare the three test solutions. Each solution contained 1.195 mg of uranium(VI) per milliliter and either 11.95, 59.75, or 119.5 μg of iron(II) per milliliter.

One-milliliter aliquots of each solution were titrated under the conditions stated, and the results were recorded by the Brown recorder of the model Q-945 automatic titrator on chart paper that was calibrated in inches on the abscissa vs. potential on the ordinate.

During the first titration, the potential changes at the end points were beyond the 1-volt range of the Brown recorder, and it was necessary to add an additional 20-megohm resistor in the electrode circuit. This made a total of 40 megohms of resistance, thus producing an applied current of about 1 μa.

The titration curves and end points were very erratic at room temperature

(1) C. N. Reilley, W. D. Cooke, and N. H. Furman, "Derivative Polarographic Titration," *Anal. Chem.* 23, 1223 (1951).

(2) M. T. Kelley, J. L. Horton, J. R. Tallackson, and F. J. Miller, *An Automatic Recording Titrator for Micro- and Macrotitrations*, Paper presented at the meeting of the Instrument Society of America, Cleveland, Ohio, Sept. 11, 1952.

because of the slow rate of the ceric-uranous reaction. The use of a CO_2 atmosphere for the titration resulted in a slight improvement in the curves. Finally, heat was applied to the titration cell by means of an infrared lamp. The regularity of the curves and the sharpness of the breaks were greatly improved. The best results were obtained at solution temperatures between 55 and 60°C.

Table 1 shows the results obtained by the titration of several 1-ml aliquots of each test solution. A recording of the successive steps in the Redox titration is shown in Fig. 1. The optimum conditions for the titration of cerous, uranous, and ferrous ions, in addition to those stated in the proposed conditions, are: (1) the use of a CO_2 atmosphere in the titration vessel to eliminate oxidation of the ions by atmospheric oxygen, (2) the use of heat to speed up the rate of the slow uranium(IV)-cerium(IV) reaction and to improve the sharpness of the chromium(II)-cerium(IV) and iron(II)-cerium(IV) curves, and (3) an applied current of approximately 1 μa to bring the potential change at the end points within the range of the Brown recorder.

The results indicate that the proposed titration is entirely feasible. There are several sources of error, most of which will produce high results in the iron determination. A spectrophotometric analysis of the reagent-grade ceric sulfate showed that it contained approximately 50 ppm of

TABLE 1. DERIVATIVE POLAROGRAPHIC TITRATION OF IRON IN STANDARD URANYL SULFATE SOLUTION*

TEMPERATURE OF TEST SOLUTION (°C)	CHART TRAVEL PER REDOX STEP** (in.)		IRON (μg)		
	U(IV) to U(VI)	Fe(II) to Fe(III)	Taken	Found	Difference
Titration with Reagent-Grade $Ce(SO_4)_2$ Solution, ~0.03 *N*					
55	12.32	0.26	11.95	11.95	0.00
	12.24	0.33	11.95	15.17	+3.22
	12.15	0.33	11.95	15.17	+3.22
Titration with Iron-Free, Reagent-Grade $Ce(SO_4)_2$ Solution, ~0.03 *N*					
60	13.90	0.29	11.95	11.55	-0.40
	13.81	0.31	11.95	12.35	+0.40
60	14.32	0.33	11.95	12.72	+0.77
	14.36	0.32	11.95	12.34	+0.39
	14.38	0.32	11.95	12.34	+0.39
60	14.99	1.63	59.75	60.87	+1.12
	15.08	1.62	59.75	60.12	+0.37
	14.93	1.59	59.75	59.75	0.00
	14.52	1.58	59.75	60.91	+1.16
	14.47	1.53	59.75	59.36	-0.39
60	14.68	3.20	119.5	123.40	+3.9
	14.72	3.22	119.5	124.10	+4.6
	14.71	3.27	119.5	126.10	+6.6

*Uranium concentration = 1.195 mg of uranium(VI) per milliliter; iron concentration as indicated.
**Volume of sample titrated = 1.0 ml.

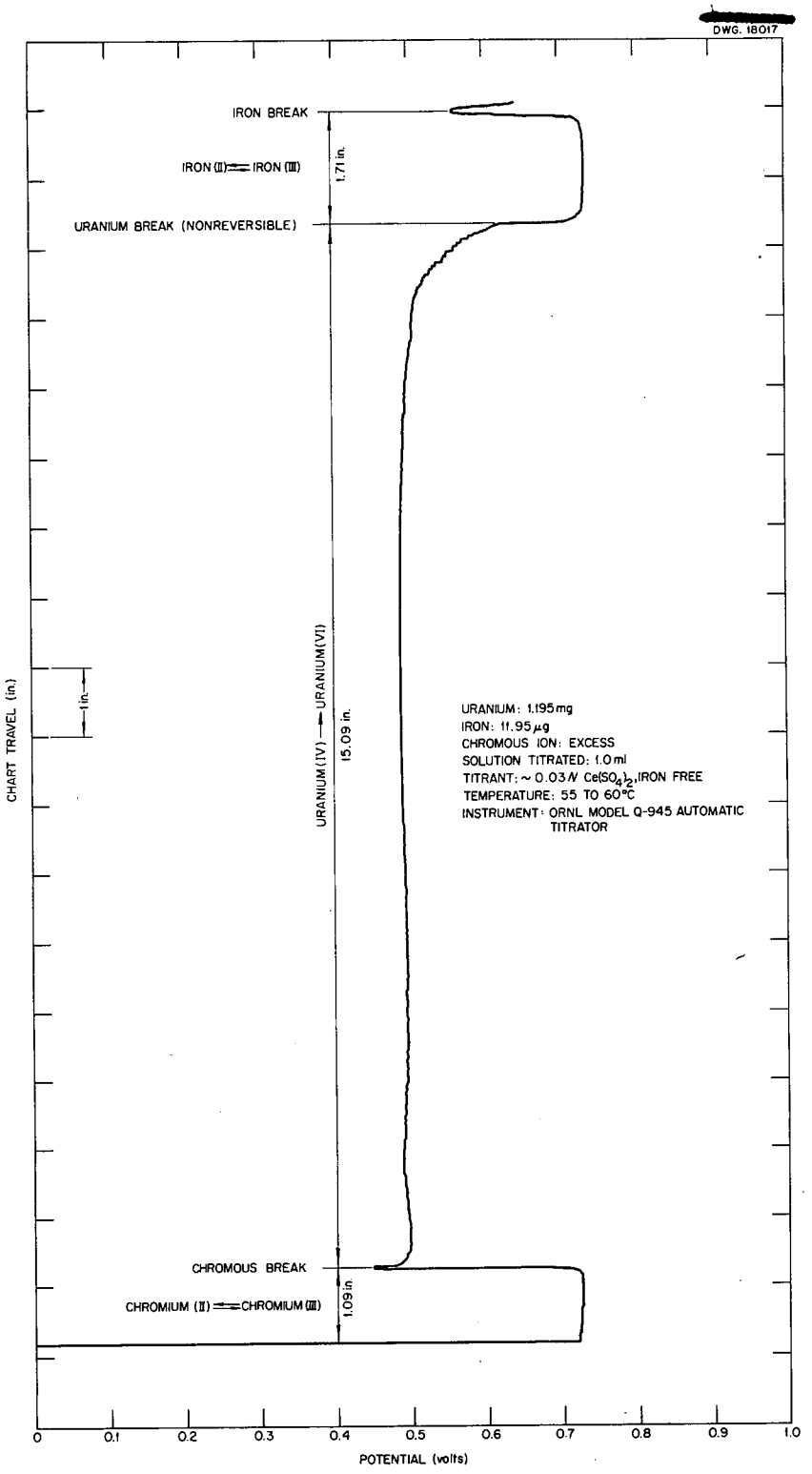

Fig. 1. Derivative Polarographic Titration Curve for Uranium(IV) to Uranium(VI) and Iron(II) to Iron(III). ORNL model Q-945 automatic titrator.

iron. A qualitative analysis of the chromium potassium sulfate indicated the presence of iron.

Once the feasibility of the procedure was established, work was begun to improve the accuracy and precision of the titrations. The major source of iron interference was eliminated by the removal of iron from the ceric sulfate. Iron-free ceric sulfate was prepared by electrolyzing saturated cerous sulfate solution in a mercury-cathode cell at a current of approximately 1 ampere. A platinum wire was in contact with the mercury-pool cathode, and the anode was a platinum wire inserted in a fritted tube filled with 2 *N* H_2SO_4. During the removal of the iron, a small amount of mercury was dissolved in the solution. After the mercury pool had been drained from the cell, the mercury was plated from the solution onto a silver-strip cathode. The purified cerous sulfate was oxidized to ceric sulfate by replacing the silver cathode with a platinum wire and reversing the current. This solution of purified ceric sulfate was diluted to about 0.03 *N* and used for most of the titrations. The results improved considerably. Work will be continued on the purification of the standard solutions and reagents in an effort to obtain precise and accurate results by use of this method.

Evaluation of the New, Model Q-1338, Series No. 1, Derivative Polarograph (H. H. Miller, M. T. Kelley, D. J. Fisher, L. A. Meeks[3]). The Instrument Department has completed the construction of the model Q-1338, series No. 1, derivative polarograph that was designed by M. T. Kelley, D. J. Fisher, and L. A. Meeks. The instrument is being tested to determine its stability and sensitivity and the degree of accuracy and precision it will permit in measuring the diffusion currents for ions with half-wave potentials that differ by less than 0.2 volt. A detailed report will be prepared when the evaluation is completed.

Polarography of Uranium in Nitric Acid Solution (H. P. Raaen). The nature of samples that are to be analyzed polarographically for uranium frequently requires that nitric acid solution be used as the supporting electrolyte. A literature search has shown that the polarography of uranium in nitric acid medium has not been systematically investigated, although the polarography of uranium in several other acid media has been studied by Harris[4] and by Kritchevsky and Hindman.[5]

A study of uranium polarography in nitric acid medium by use of the ORNL high-sensitivity polarograph is planned. The reproducibility of the polarograms of the supporting electrolyte will be considered, and particular attention will be given to the possible dissolution of mercury by nitrous acid,[6] which may be present as an impurity in the nitric acid reagent or may be formed by the reaction between mercury and nitric acid. The potentials of the uranium(III)-uranium(IV) and uranium(V)-uranium(VI) couples in nitric acid will be determined by the use of uranyl nitrate. A determination will also be made of the dependence of the half-wave potentials of the waves of the uranyl polarogram on the concentrations of the hydrogen, nitrate, and uranyl ions. From this information, it should be possible to establish the optimum conditions for the quantitative submicrodetermination of uranium and the dependence of the diffusion current on uranyl ion concentration.

(3) ORNL Instrument Department.

(4) W. E. Harris, *Extracts from a Thesis on the Polarography of Uranium*, CC-2702 (April 4, 1945).

(5) E. S. Kritchevsky and J. C. Hindman, "The Potentials of the Uranium Three-Four and Five-Six Couples in Perchloric and Hydrochloric Acids," *J. Am. Chem. Soc.* **71**, 2096 (1949).

(6) A. N. Kappanna and K. M. Joshi, "The Reaction Between Mercury and Nitric Acid. A Kinetic Study," *J. Indian Chem. Soc.* **25**, 547 (1948).

A temperature-control system was designed and built by H. Hemphill and N. D. Lee for use in this work. It provides control of the temperature within the electrolysis cell, when the solution is undisturbed, to ±0.02°C or better, without employing a water jacket that is fixed to the cell.

The results of this study will be directly applicable to the submicrodetermination of uranium after its separation from other metals by filter-paper partition chromatography, as described earlier.[7]

Separation of Uranium from Other Metals by Filter-Paper Partition Chromatography (H. P. Raaen, W. D. Shults, II). The study of the microseparation of uranium(VI) from other metals by filter-paper partition chromatography with H_2O-saturated 2-methyltetrahydrofuran containing 2.5 vol % of concentrated nitric acid[4] was extended to eight additional metals. The effectiveness of the separations was determined by use of radionuclides of the metals and subsequent autoradiography of the chromatograms. The results are summarized in Table 2 and will be discussed more fully in an ORNL topical report. A paper on this subject was presented at the Southwide Chemical Conference of the American Chemical Society at Auburn Polytechnic Institute on October 23.

[7] H. P. Raaen and P. F. Thomason, "Separation of Uranium(VI) from Other Metals by Filter-Paper Partition Chromatography," *Anal. Chem. Quar. Prog. Rep. June 26, 1952*, ORNL-1361, p. 12.

TABLE 2. SOME ADDITIONAL RADIOISOTOPES FROM WHICH URANIUM-233 SEPARATES

SEPARATED		RESULTS NOT CONCLUSIVE
Without Movement	With Movement	
Ag^{110}	$As^{73,74}$	W^{185}
Cs^{137}	Se^{75}	
Pm^{147}	In^{192}	
Pa^{233}		

Separation of Mercury from Other Metals by Filter-Paper Partition Chromatography (H. P. Raaen, W. D. Shults, II). Mercury was indicated to behave in a manner similar to uranium in filter-paper partition chromatography with 2-methyltetrahydrofuran.[7] This suggested a possible method for the microseparation of mercury from many other metals; however, discrepancies exist in the literature[8,9,10] regarding the behavior of mercury in this chromatographic system. Also, studies with three different samples of $Hg^{203}(NO_3)_2$ showed irreproducible behavior of the mercury. Experiments are in progress to determine whether factors such as the valence state of the mercury, purity of the radioisotope, or peroxide content of the eluting solvent affect the behavior of mercury.

Separation of Protactinium-233, Zirconium-95, and Niobium-95 from Thorex Process Solutions and Uranium-233 Product (E. I. Wyatt, H. P. Raaen, W. S. Lyon). The method of separating uranium from other elements by use of filter-paper partition chromatography with water-saturated 2-methyltetrahydrofuran containing 2.5 vol % of nitric acid[7] was used in a study of Thorex process samples to indicate the efficiency of the separation of U^{233} at various stages in the process and to check the purity of the finished product. Protactinium-233, Nb^{95}, and Zr^{95} were separated from each of two process solutions and also from the U^{233} product. They were identified by scintillation-counter studies of

[8] T. V. Arden, F. H. Burstall, G. R. Davies, J. A. Lewis, and R. P. Linstead, "A New Method for the Separation, Detection, and Estimation of Inorganic Compounds," *Nature* **162**, 691 (1948).

[9] T. V. Arden, F. H. Burstall, and R. P. Linstead, "A New Method for the Detection and Determination of Uranium," *J. Chem. Soc.* **S63**, 311 (1949).

[10] J. A. Lewis and J. M. Griffiths, "Inorganic Chromatography on Cellulose. IV. Determination of Inorganic Compounds by Paper-Strip Separation and Polarography," *Analyst* **76**, 388 (1951).

the chromatographically resolved bands of nuclides. The effectiveness of the chromatographic technique in separating U^{233} from the other three nuclides was demonstrated independently by separation studies in which U^{233} and only one of the other nuclides were used.

The results of these experiments signify that the U^{233} product of the Thorex process contains Pa^{233}, Nb^{95}, and Zr^{95} impurities and suggest that separation of the U^{233} might possibly be effected at an earlier stage in the Thorex process by use of a cellulose sheet or column chromatographic operation.[11] The separation of U^{233} from Pa^{233} is believed to be the first chromatographic separation of these two nuclides.[12] The details of this work will be reported in an ORNL topical work.

Colorimetric Estimation of Nitrate in the Presence of Uranium (J. M. Chilton, H. T. Cutcher). Further work on the colorimetric determination of nitrate impurities in uranyl sulfate solutions by the brucine method[13] indicated that a number of variables, including the amount of water added and the length of time before chilling the solution in the color-development procedure, affected the result obtained. Rather than attempt to formulate the optimum conditions for this procedure, it was preferred to investigate the phenoldisulfonic acid colorimetric procedure.[14] The phenoldisulfonic acid reagent was prepared exactly as described by Snell and Snell.[14] The standard deviation of the method was found to be 1.7%. The analysis of aliquots of a standard nitrate solution gave the same results in the presence and absence of added nitrate-free uranium salts. A description of this method will be written for inclusion in the ORNL Master Analytical Manual.

Simultaneous Spectrophotometric Determination of Copper, Cobalt, and Nickel as Diethyldithiocarbamates (J. M. Chilton). A paper describing this work was presented at the Southwide Chemical Conference of the American Chemical Society at Auburn Polytechnic Institute on October 24.

Electrolytic Removal of Iron from Sulfate Solutions of Plutonium by Use of a Mercury-Coated Silver Cathode (F. J. Miller). Several factors that affect the electrolytic removal of milligram quantities of iron from sulfate solutions of plutonium were studied. The limiting conditions of acidity, current density, cathode area, temperature, and other factors are discussed below.

An increase in the acid concentration of the sulfate solution of plutonium above 2.0 *N* prevents the removal of iron from the solution. Above this concentration, iron is not removed even by an increase in the current density, cooling of the solution, and vigorous stirring during electrolysis. It is recommended that the acid concentration of the solution should not exceed 1.8 *N*.

A current density of 0.2 amp/cm^2 is sufficient to remove milligram amounts of iron from sulfate solution in 1 hour. If plutonium is present, a current density of 1.0 amp/cm^2 is required to remove the same amount of iron in the same length of time. The time of removal may be shortened to 10 min by increasing the current to 3.0 amp, but vigorous frothing ensues and loss of sample may result.

The cathode area limits the amount of mercury held on the silver cathode and, consequently, the amount of iron that can be removed from the solution.

(11) H. Weil, "Chromatographic Technology in Radioisotope Separation. Part I. Chromatographic Equipment," *Atomics* 1, 230 (1950).

(12) *Ibid.*, "Part II. Applications," p. 345, esp. p. 351.

(13) J. M. Chilton, "Colorimetric Estimation of Nitrate in the Presence of Uranium," *Anal. Chem. Quar. Prog. Rep. Sept. 26, 1952*, ORNL-1423 (in press).

(14) F. D. Snell and C. D. Snell, *Colorimetric Methods of Analysis*, 3rd ed., Vol. II, p. 792, Van Nostrand, New York, 1949.

Unless sufficient area is allowed, the mercury becomes saturated with iron and no further removal of iron takes place. A 1-cm^2 area should be allowed per milligram of iron to be removed.

The presence of strong oxidizing agents in the solution is deleterious to the deposition of iron and will cause the mercury of the cathode to be partly dissolved. The presence of mercury in the solution will prevent accurate titrations of the plutonium.

If a potential is not applied to the electrodes prior to their immersion in the solutions, part of the mercury on the cathode is immediately dissolved, even by dilute sulfuric acid, and traces of mercury will still be found in the solution after prolonged electrolysis. If the voltage is not maintained on the electrodes during their removal from solution, not only will mercury be left in the solution, but the iron that has been removed will be dissolved off the electrode.

Cooling the solution during electrolysis will effect a noticeable increase in the amount of iron removed. This is probably caused by a reduction in the solvation action of the solution with decrease in temperature.

ORNL Master Analytical Manual (H. P. Raaen). It is anticipated that the ORNL Master Analytical Manual will be issued early in January. The following methods have been edited and will be included in the sections indicated.

Section 0, Editorial Instructions

1. Organization of the ORNL Master Analytical Manual and Numbering of the Methods
2. Writing Methods for the ORNL Master Analytical Manual
3. Authorization and Classification of Methods for the ORNL Master Analytical Manual
4. Typing and Printing Methods for the ORNL Master Analytical Manual
5. Maintenance of the ORNL Master Analytical Manual

Section 1, Ionic Methods

1. ORNL High-Sensitivity Polarograph
2. Analysis of Gas Mixtures
3. Calcium, Semimicro Volumetric Oxalate Method
4. Carbon in Alloys, Semimicro Gravimetric Method
5. Ethylenediamine or Propylenediamine in Aqueous Solutions, Volumetric Method
6. Fluoride, Spectrophotometric Thoron Method
7. Fluoride, Volumetric Method
8. Sulfate, Polarographic Method
9. Uranium, Ammonium Thiocyanate Colorimetric Method
10. Water, Karl Fischer Volumetric Method
11. Zirconium, Microspectrophotometric Thoron Method

Section 2, Radiochemical Methods

1. Barium Activity in Aqueous or Organic Solutions
2. Iodine Activity in Aqueous Solutions
3. Iodine Activity, Gamma Ion-Chamber Method

Section 3, Spectrographic Methods

1. Measurement of Relative Chemical Concentrations
2. Calibration of Photographic Emulsions for Spectrographic Analyses

Section 9, Process Methods

1. Chromium in ANP Fuel Eutectic, Spectrophotometric Method
2. Iron in ANP Fuel Eutectic, Spectrophotometric Method
3. Nickel in ANP Fuel Eutectic, Spectrophotometric Method
4. Zirconium in ANP Fuel Eutectic, Spectrophotometric Method
5. Fluorides in ANP Fuel Eutectic and Other Salts, Micropyrohydrolysis Method
6. Free Acid in Thorex Process Solutions
7. Uranium in HRE Solutions, Ammonium Diuranate Gravimetric Method

ANALYTICAL INSTRUMENTATION

D. J. Fisher H. L. Hemphill

Development of an Automatically Recording, Internal-Standard, Flame Photometer. III. Evaluation (M. T. Kelley, D. J. Fisher, H. L. Hemphill, N. D. Lee, C. Feldman, W. Pruessner). The automatically recording, internal-standard, flame photometer that is being developed has been discussed previously.[15,16] Functional diagrams that illustrate the principles of operation of the ratio-and-control circuit have been prepared. The operation of the circuit that is used for recording the single-beam, photomultiplier output for the internal standard is shown in Fig. 2, where it can be seen that the Brown recorder functions as a millivolt recorder in the usual manner. Figure 3 shows the principles of the double-beam operation of the flame photometer. In the double-beam operation, the balance slidewire of the Brown recorder is not used. In its place, a helipot slidewire that is geared to the bull gear of the recorder functions as the recorder-balance slidewire. The Brown servo balances the signal from the sample photomultiplier against the reference signal from the internal-standard photomultiplier. The Brown recorder therefore records the ratio of the output of the sample photomultiplier to the output of the internal-standard photomultiplier.

The optical system of a model B Beckman spectrophotometer is now used as a sample monochromator. At first, a composite, glass filter was used for the monochromator of the internal standard. It appeared that heating of this filter caused considerable long-term recorder drift. An interference filter was chosen to transmit the desired internal-standard emission line and has proved to be a superior filter for this application. The filter reflects rather than absorbs the light that it does not pass. A Bausch and Lomb, wedge-type, interference filter has been obtained, and a positioning device is being built so that the filter may be used as the monochromator for the internal standard. At a later time, the model B Beckman spectrophotometer may be replaced by a similar wedge-type monochromator, designed so that both photomultipliers see the flame under like conditions.

In the instrument as it was first built, no special precautions were taken in mounting the 1P21 photomultipliers. Several suggestions were offered by P. R. Bell, Jr. of the Physics Division regarding remounting of the photomultipliers in the photometer. These suggestions were followed, and increased stability of the output of the photomultipliers resulted. Several 1P21 tubes were found to be too noisy; however, they were not new tubes. Ground-glass diffusing screens were added to ensure that the light from the monochromators is spread out over the photocathodes. It was found that prior deaeration of test solutions by heating resulted in improved steadiness of the output of the internal-standard photomultiplier and in a somewhat steadier output ratio.

Although the voltage supplied to the photomultipliers has large effects on the output of a single photomultiplier, the double-beam ratio is insensitive to fairly wide variations in the voltage supply. Both RF-type and series-VR-tube-type regulated-negative-voltage supplies were tried. It was found that the latter type, such as the ORNL model Q-1210, is adequate.

(15) M. T. Kelley and D. J. Fisher, "Development of an Automatically Recording, Internal-Standard, Flame Photometer. I. 100% Feedback, Impedance-Matching, Direct-Current Amplifier," *Anal. Chem. Quar. Prog. Rep. June 26, 1952*, ORNL-1361, p. 4.

(16) M. T. Kelley and D. J. Fisher, "Development of an Automatically Recording, Internal-Standard, Flame Photometer. II. Ratio and Control Circuit," *Anal. Chem. Quar. Prog. Rep. Sept. 26, 1952*, ORNL-1423 (in press).

UNCLASSIFIED
DWG. 18018

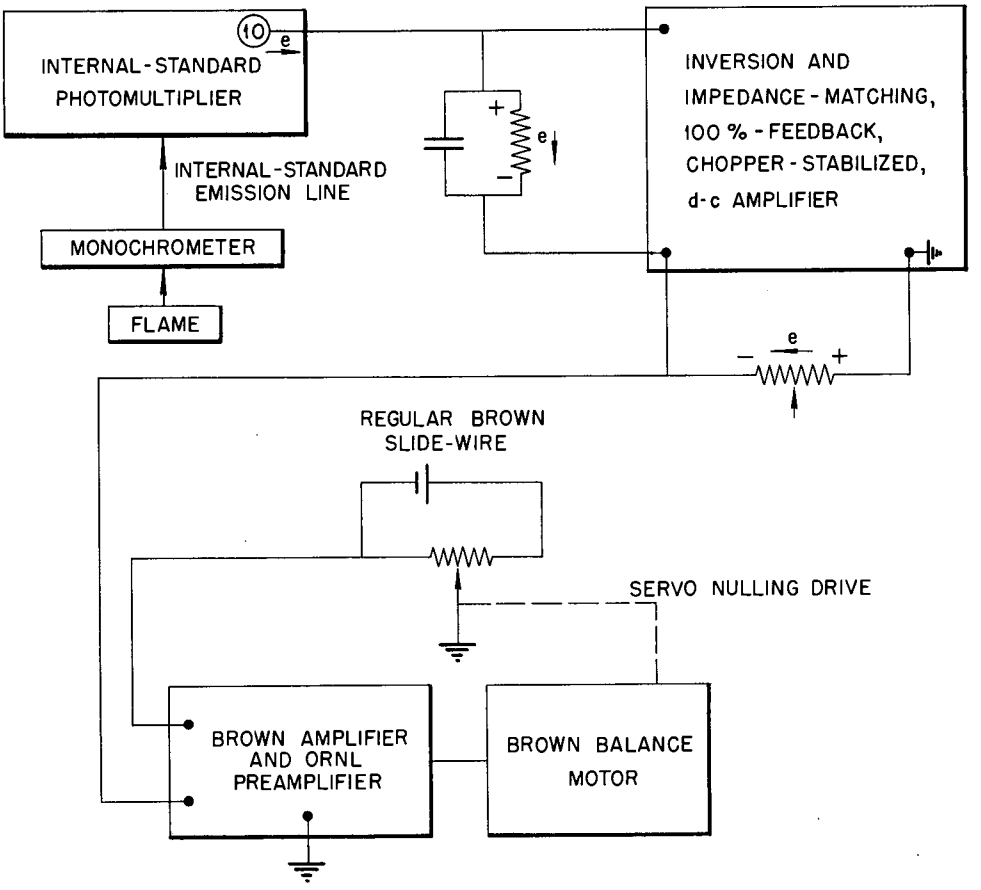

Fig. 2. Functional Diagram of Automatically Recording, Internal-Standard Flame Photometer. Circuit shown switched to record internal-standard photomultiplier single-beam output.

Observations of the effect of instrument modifications on the stability of the output of the photomultipliers were made by means of a light bulb that was maintained at a constant voltage and mounted at the flame position. The stability was also checked by setting both monochromators to the emission line-pair of sodium and burning a solution that contained about 15 ppm of sodium. It was found that the double-beam ratio was insensitive to changes in light-bulb intensity. After a 30-min warmup period of the instrument as it was first constructed, the ratio of the photomultiplier outputs drifted as much as 6% in 10 minutes. After a 20-min warmup of the present photometer, the ratio of the photomultiplier outputs is within 1% of its final value. The amount of drift is decreased if a longer warmup period is used. For example, the present photometer drifts less than 1/2% after a 30-min warmup, whereas the

UNCLASSIFIED
DWG. 18019

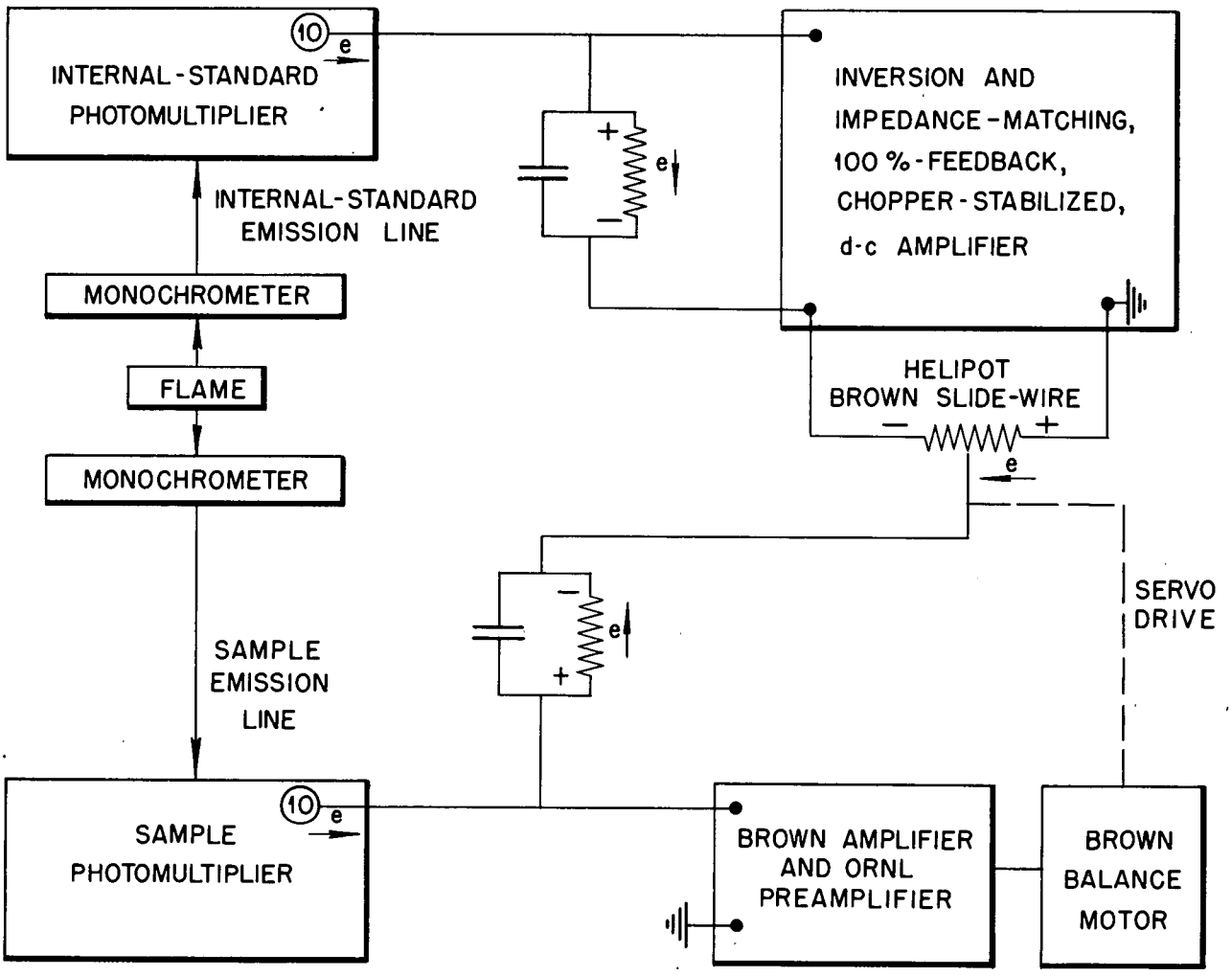

Fig. 3. Functional Diagram of Automatically Recording, Internal-Standard Flame Photometer. Circuit shown switched to record double-beam ratio.

photometer as first constructed drifted several per cent during the second hour.

The photometer is now being tested with a flame and with various solutions that contain sample substances and added internal standards. The results of this study will determine the further development of the photometer that is needed and will be reported in the next quarterly report. A manual describing the operation of the instrument will be prepared.

Revision of Gating Circuit of ORNL Model Q-945 Automatic Titrator (M. T. Kelley). The original circuit of the gate in the ORNL model Q-945 automatic titrator[17] made the proper setting of the diode-adjust potentiometer difficult. The revised gating circuit

[17] Dwg. No. Q-945-1, ORNL Instrument Department.

shown in Fig. 4 has been found to function satisfactorily. The proper setting of the diode-adjust potentiometer can be described unambiguously in terms of the appearance of an oscillographic trace recorded while the titrator is in operation.

Revision of the ORNL Model Q-983 Automatic Curve-Follower Installed in a Q-1160 High-Sensitivity Polarograph (M. T. Kelley). The ORNL model Q-983, automatic, polarographic curve-follower has been described in an Instrument Department report.[18] The curve-follower that is installed in a model Q-1160 high-sensitivity polarograph has not been completely satisfactory. The fault in the original circuit appeared to be an excessive bias that resulted from positive-ion current in the 12AU7 tube. The original circuit required a selected 12AU7 tube. Over a period of time, the positive-ion bias increased. To overcome this, the output of the phototube had to be raised by increasing the voltage applied to the two type-222 penlight bulbs above the value of 1.5 volts specified in the original design. Still later, the voltage had to be increased more. As a result, the lives of the penlight bulbs were very short and frequent replacements and

(18) M. R. Smith, *Automatic Curve Follower, Q-983*, Report XIII-5, ORNL Instrument Department (Sept. 18, 1950).

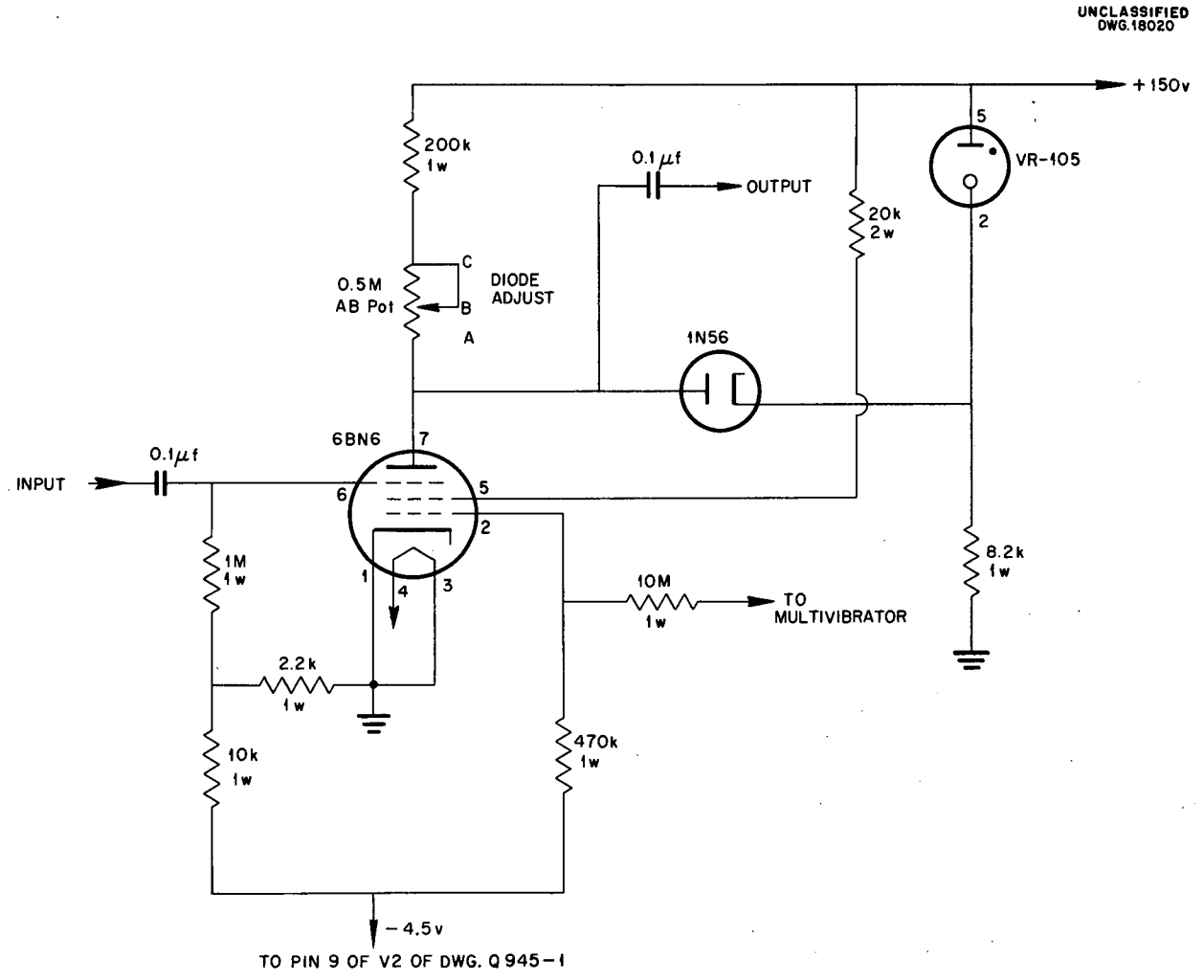

Fig. 4. Revised Gating Circuit for ORNL Model Q-945 Automatic Titrator.

readjustments were necessary; also, the functioning of the curve-follower was unreliable.

The revised circuit is shown in Fig. 5. Three changes in the original circuit have been made. The heater voltage of the 12AU7 tube was reduced to 5 volts in order to reduce positive-ion current; a 10-megohm resistor was connected in series with the second grid to match the one in the first grid circuit; and the voltage at the 0.5-M potentiometer shown in Fig. 5 was changed by the addition of a 6.8-megohm series resistor. The revised circuit operates satisfactorily with the old 12AU7 tube and only 1.3 volts applied to the two penlight bulbs.

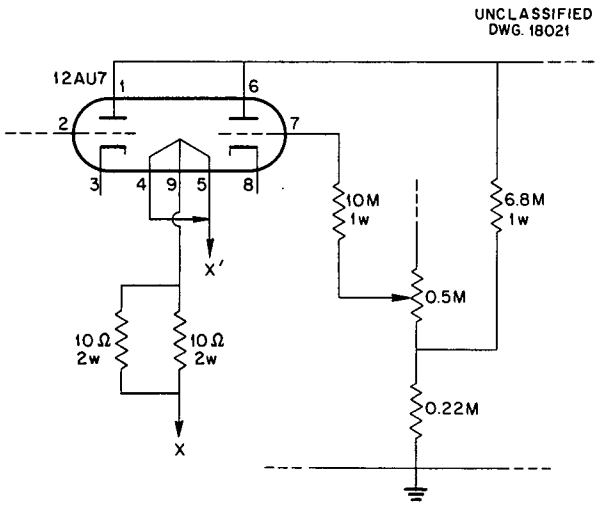

Fig. 5. Revised Section of the Circuit of the ORNL Model Q-983 Automatic Curve Follower.

Analytical Applications of High-Frequency Oscillators. II. ORNL Gridos (M. T. Kelley, E. B. Wagner, D. J. Fisher). In a previous quarterly report,[19] it was stated that a grid-dip oscillator, which is essentially a Colpitts type, had been built and given an initial evaluation. This type of instrument has since been applied to certain analytical problems that have necessitated further study of its design.[20] Methods of obtaining linearity of response, increased sensitivity, and proper oscillator functioning in the analysis of high-conductivity solutions have been considered. These problems are very much interrelated; a circuit change that would affect sensitivity could very well also affect linearity, or even necessitate improvement in stability.

An empirical approach was taken in considering the problems associated with each test solution. Estimations of the dielectric constant and conductivity of the particular solution were used in designing the oscillator. Because the range of the oscillator loads will often be wide, the design principles of transmitters were employed. As an illustration, a concentrated aqueous solution of a strong base would have a specific resistance of a few ohms and would load an oscillator in a way entirely different from that of a 0.001 *M* solution of the same base, which would have a specific resistance of the order of a thousand ohms.

Obtaining linearity of the Gridos response curve has been a very difficult problem. A single-valued function that is free of any maxima or inflection points usually has to be accepted in lieu of perfect linearity. The linearizing of Gridos response curves by causing the recorder to be suitably nonlinear has been considered but not yet tried. The cell design, oscillator frequency, and circuit parameters have all been found to affect the shape of the curves obtained. In order to establish optimum test conditions, the solutions are usually studied at different oscillator frequencies in a condenser and in a coil in the tank

(19) M. T. Kelley, D. J. Fisher, and E. B. Wagner, "Analytical Applications of High-Frequency Oscillators. II. ORNL Gridos," *Anal. Chem. Quar. Prog. Rep. Sept. 26, 1952*, ORNL-1423 (in press).

(20) *Analytical Chemistry Limited Access Quarterly Report for Period Ending Dec. 20, 1952* (in press).

circuit of the oscillator. The most promising cell and frequency combination is then chosen for use in further work in which the circuit parameters are studied as variables. For instance, the study may lead to a curve that is satisfactory for electrolyte concentrations up to 1 *M*, but at higher concentrations the oscillator may cease to function because of the loading produced by a high-conductivity solution.

A circuit diagram of a fundamental Colpitts oscillator is shown in Fig. 6 as an aid in illustrating the method of approach to the problems. In the analysis of solutions of low concentration and high specific resistance, the oscillator would operate essentially as if it were unloaded; that is, a small amount of power would be delivered to the solution and dissipated as losses in the solution. Most of the circuit losses would be as if they were caused by the d-c resistance of the coil. Therefore the main consideration, with respect to the circuit, is to obtain a proper *LC* ratio in the tank circuit that will tune the desired frequency range with stable oscillations. In the case of the previously mentioned 1 *M* electrolyte solution with a specific resistance of a few ohms, it would be necessary to design the oscillator as a power oscillator. The excitation voltage and the plate impedance are two important factors in the design of a power oscillator. One of the critical circuit elements in the Colpitts power oscillator is the capacitor, C_1, that controls the grid excitation voltage. If this voltage is too high, too much power will be expended in the grid circuit. If the excitation voltage is too low, the efficiency of the oscillator is low and the desired oscillator output will not be obtained. Because the part of the radiofrequency circuit between the grid and the cathode consists only of C_1, the grid excitation voltage must equal the IX_{C_1} drop across C_1. Therefore the excitation voltage is a function of the capacity, the frequency, and the current in the circuit. Because the excitation voltage depends upon the values of the rf circulating current, the proper grid feedback capacity is a function of the circuit losses. If the power losses caused by the solution are increased by a change of specific resistance of the solution, the capacity of C_1 should be increased in order to obtain a decrease in X_{C_1} so that the excitation voltage is proper. In a similar manner, the effect of the load on the output impedance must be considered in relation to the plate resistance (*Rp*) of the tube. If the plate output impedance is too small, the output of the tube will not be maximum, and, although the circuit will oscillate freely when unloaded, it may be unstable or stop oscillating when a heavy load is applied.

The same methods that were employed in the study of the problem of linearity apply to problems of stability and

UNCLASSIFIED
DWG. 18022

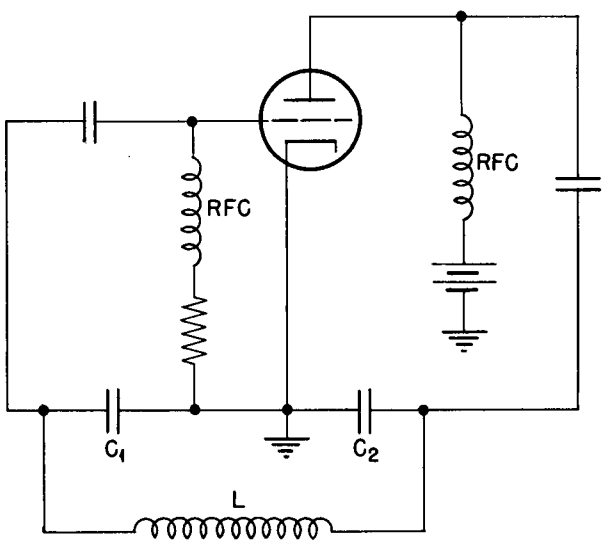

Fig. 6. Circuit Diagram of a Fundamental Colpitts Oscillator.

sensitivity. This is especially true because these factors are often interrelated. Increased sensitivity is obtained by substituting a Brown recorder for a microammeter to monitor the grid current. Extensive shielding and filtering have been used to prevent rf from entering the Brown recorder. Other studies have been made to determine the effect of temperature on the long-term drift rate of the Gridos.

These techniques have made it possible to build several prototype Gridos instruments that have been used successfully to analyze solutions of different types. It is planned to design and build a prototype Gridos for general laboratory use that will be mechanically stable, well shielded, and convenient for finding optimum circuit parameters for the various analyses requested. Also, the usefulness of the instrument for kinetic studies and nonaqueous titrations will be determined. In general, the use of the Gridos should be advantageous when it is desired to eliminate physical contact of electrodes with the test solution, surface effects, or difficulties caused by colloids or precipitates.

Microelectrode Assembly for pH Measurements (M. T. Kelley, H. L. Hemphill). A need existed for an expendable microelectrode assembly to measure the pH of small volumes of highly radioactive RaLa process solutions. Such an apparatus would also find widespread use in testing other radioactively hazardous solutions.

It has been shown that the emf of a cell, such as

$$\mathrm{Ag|AgCl,\ 0.1}\ N\ \mathrm{HCl|glass|test\ solution||KCl\ (sat.),\ Hg_2Cl_2|Hg}$$

in which a thin, glass wall separates a test solution from a 0.1 *N* HCl solution, varies with the hydrogen ion activity of the solution.[21] The half-cell

$$\mathrm{KCl\ (sat.),\ Hg_2Cl_2|Hg}$$

may be replaced by the half-cell

$$0.1\ M\ \mathrm{KCl,\ AgCl|Ag}$$

without adversely affecting this relationship. By the use of a cell such as

$$\mathrm{Ag|AgCl,\ 0.1}\ N\ \mathrm{HCl|glass|test\ solution||0.1}\ M\ \mathrm{KCl,\ AgCl|Ag},$$

an apparatus for the determination of the pH of small volumes of highly radioactive solutions has been developed. The apparatus is shown diagrammatically in Fig. 7.

When the assembly is in use, the tips of the reference and indicator electrodes are brought into contact with the test solution. The capillary tube of the indicator electrode transfers the test liquid into the half-cell. The cell is connected to a pH meter, from which readings are made.

The accuracy, precision, and range of pH measurements made with this assembly compare favorably with those of measurements made by use of the conventional, commercial electrode assemblies. The advantages of this type of cell are the convenient size, low cost, and expendability. Also, it permits the use of small sample volumes, 25 μl being adequate, eliminates the need for a sample container, and can be operated entirely by remote control.

[21] I. M. Kolthoff and H. A. Laitinen, *pH and Electro-Titrations*, 2nd ed., p. 100, Wiley, New York, 1944.

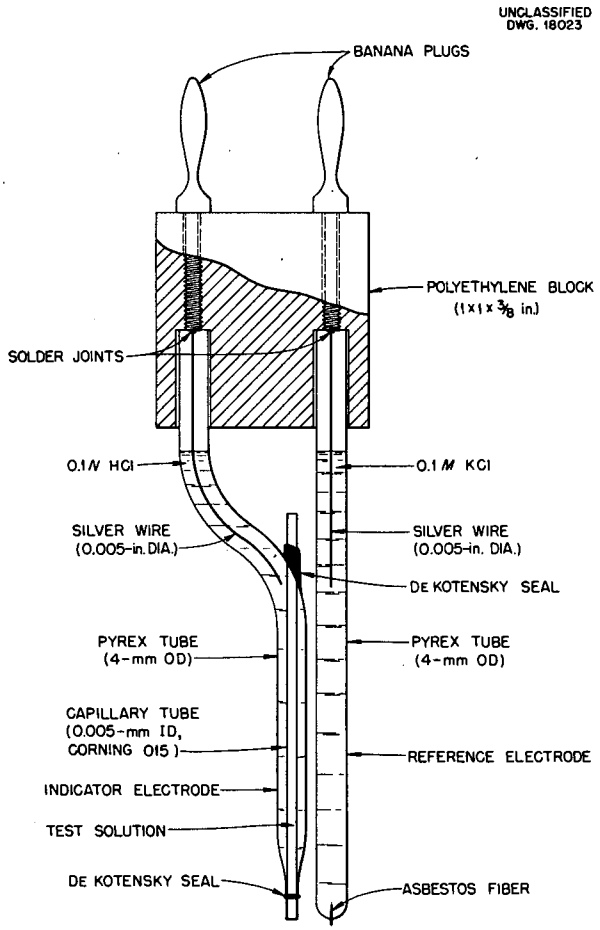

Fig. 7. Microelectrode Assembly for pH Measurements.

RADIOCHEMICAL ANALYSES

S. A. Reynolds

Nuclear Properties

Decay Scheme of Cerium-141 (W. S. Lyon, B. Kahn[22]). Cerium-141 ($t_{1/2}$ = 30 d) is of interest in the calibration of gamma-counting equipment because it decays through an excited state with the emission of a 0.14-Mev gamma ray. Freedman and Engelkemeir[23] report the decay to proceed 33% directly to the ground state (0.581-Mev beta) and 66% 0.442-Mev beta followed by the 0.145-Mev gamma. Their values of the conversion coefficient, α, are 0.25 from spectrometer measurement and 0.70 from beta-gamma coincidence measurements. Recently, Heath[24] has published work on Ce^{141} that indicates α to be 0.46.

The branching ratio and α have been determined for Ce^{141} by 4π-coincidence counting to obtain the absolute disintegrations per minute of a Ce^{141} solution and by beta-gamma coincidence counting of an aliquot of the Ce^{141} solution. These data indicate that the value of the product fc is 0.30 ± 0.02; f is the fraction of Ce^{141} that goes through the gamma transition; and c is obtained from the expression

$$\alpha = \frac{c}{1 - c}.$$

Further, these data indicate that $f = 0.79$, $c = 0.38$, and $\alpha = 0.61$ – values that are at variance with others reported.[23,24]

Gamma Energies and Half Life of Cesium-136 (W. A. Brooksbank). The gamma energies and half life of Ce^{136} are reported in *Neutron Flux Determination of HR No. 1,* of this report.

Neutron Cross Sections for Production of Scandium-46 and Strontium-85 (W. S. Lyon). The isotopic cross sections for the reactions $Sc^{45}(n,\gamma)Sc^{46}$ and $Sr^{84}(n,\gamma)Sr^{85}$ have been found to be $21.6 \pm 2 \times 10^{-24}$ and $1.2 \pm 0.1 \times 10^{-24}$ cm^2, respectively. Only the results of these studies are included here because a full report will be published in the open literature.

Experimental Search for Long-Lived Titanium-51 (S. A. Reynolds). It is known that Ti^{51} has a 6-m half life. A few years ago, it was generally believed[25] that a long-lived isomer of Ti^{51} existed; however, nuclear

(22) Health Physics Division.

(23) M. S. Freedman and D. W. Engelkemeir, "The Radiations of Ce^{141} and Pa^{233}," *Phys. Rev.* **79**, 897 (1950).

(24) R. L. Heath, "K-Shell Conversion Coefficient of Ce^{141}," *Phys. Rev.* **87**, 1132 (1952).

(25) G. T. Seaborg and I. Perlman, "Table of Isotopes," *Revs. Modern Phys.* **20**, 593 (1948).

shell theory did not predict isomerism in this nuclide.[26] The long-lived activity assigned to titanium has been shown to be the result of impurities.

Enriched Ti^{50} was bombarded in the LITR at a neutron flux of 10^{13} neutrons/cm^2·sec, and the activity that resulted was studied by observation of gamma decay and measurement of gamma energies by means of the scintillation spectrometer. Preliminary results indicate that the cross section of Ti^{50} for production of a long-lived Ti^{51}, having the properties formerly assigned, is less than 10^{-5} barn.

Instrumental Analyses

Gamma- and X-Ray Spectrometry Applied to Analytical Radiochemical Problems (W. S. Lyon, S. A. Reynolds). The crystal spectrometer is a powerful tool for the analytical chemist. Recently, several applications have demonstrated its usefulness.

Determination of Niobium-95 and Zirconium-95 in the Presence of Protactinium-233. It was desired to know the amount of Zr^{95} and Nb^{95} contaminant in "23" process solutions and products that contained large amounts of Pa^{233}. Standard radiochemical analytical procedures failed to decontaminate Pa^{233} to a degree that would make beta counting of the Zr^{95} and Nb^{95} product meaningful. However, by examination of the gamma spectra of the samples over the regions of highest gamma intensity (0.71-Mev Zr^{95}, 0.76-Mev Nb^{95}, and 0.31-Mev Pa^{233}) and by comparison of the areas beneath the photopeaks with areas under the photopeaks for known standard samples similarly examined, an accurate value for the total activity that is due to each nuclide was obtained.

Identifications of Activities in Waste and Unknown Solutions. The Health Physics Division desired to know what activities were present in a waste sample. A portion of the liquid was placed in a culture tube, the tube mounted on a mounting card, and the assembly placed on the spectrometer. A quick examination of the spectra revealed the activity to be almost entirely Cs^{137}.

A residue of unknown composition was found at the liquid-liquid interface of a process extraction column. A portion of the residue was examined on the spectrometer and the activity was identified as I^{131}.

By use of the spectrometer, activities in process solvent samples have been found to be, in certain cases, I^{131} with small amounts of Ru^{103}, and in others, Ru^{103} and Ru^{106}.

In all these examples, the time required for an identification was generally less than an hour, and, unless the sample was a mixture of several nuclides, the identification usually required only several minutes. Quantitative results may be obtained by comparison with known standards.

A proportional-counter x-ray spectrometer has been received and put into use. The design is similar to that of Borkowski.[27] Chambers filled with argon-methane and krypton-methane mixtures are used for work with x rays of different energies. This instrument has already been used to aid in identifying Zn^{65} in an unknown sample by detection of copper x rays that the nuclide emits. From this information and that obtained from the scintillation spectrometer – that is, that a 1.1-Mev gamma ray was emitted by the sample – the identification was made quickly.

Efficiency of Thallium-Activated Sodium Iodide Gamma-Ray Spectrometer (W. S. Lyon, B. Kahn[22]). The counting response of the crystal spectrometer that is located in room

(26) J. A. Miskel, E. der Mateosian, and M. Goldhaber, "The Question of Isomerism in Ti^{51}," *Phys. Rev.* **79**, 193 (1950).

(27) C. J. Borkowski, "Proportional Counter Spectrometer," *Chem. Quar. Prog. Rep. Sept. 30, 1949*, ORNL-499, p. 137.

C-6 of Building 4500 has been determined for gamma rays that have energies between 280 and 2760 kev. The equipment has been adjusted to detect pulses within a 10-kev energy increment, that is, a slit-width setting of 1.0 at the pulse-height setting that is proportional to kilovolts. The counting rate over the pulse-height setting range was plotted vs. the pulse height, and a curve, such as that shown in Fig. 8 for Ce^{141}, was obtained. The pulse height at the peak is proportional to the energy of the gamma or x ray emitted by the nuclide, and the area beneath the peak, after being corrected for background, is the total counting rate caused by photoelectrons produced by the gamma and x-ray quanta in the crystal. Radioisotopes with known photon disintegration rates have been used to obtain the ratio of disintegration rate to the area under the peak (Fig. 9). By use of this "efficiency" curve, quantitative evaluation of gamma counting data can be made.

Analysis of Radioisotopes

Determination of Actinides (G. W. Smith). The determination of actinides is described in the section *Analysis for Heavy Elements,* of this report.

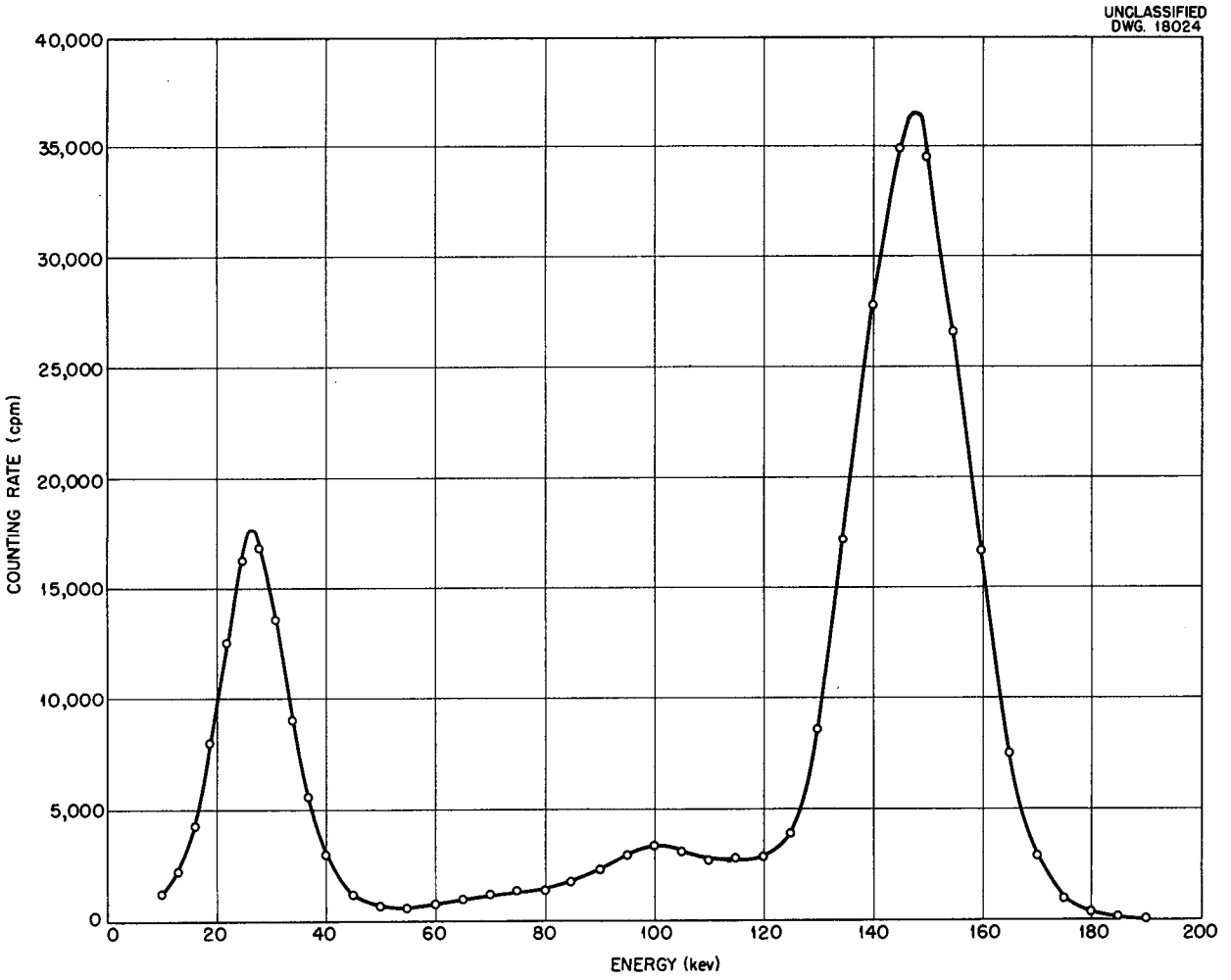

Fig. 8. Gamma Ray Spectrum of Cerium-141. Determined with the thallium-activated sodium iodide crystal spectrometer.

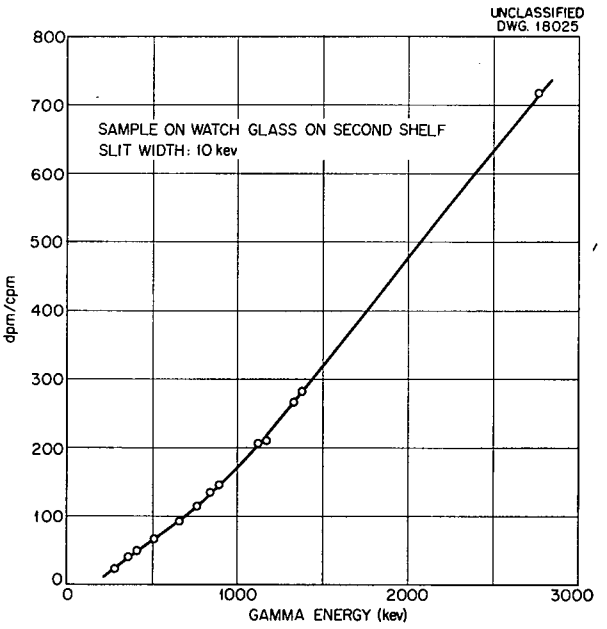

Fig. 9. Variation of Response of Thallium-Activated Sodium Iodide Gamma Spectrometer with Gamma Energy.

Paper Chromatography (G. W. Smith). Work on paper chromatography is discussed in *Ion Exchange and Chromatography,* of this report.

Examination of Radioisotope Products for Gamma-Emitting Contaminants (W. S. Lyon). Various radioisotope products and other samples have been examined for gamma contaminants. The continued observation of the 0.51-Mev gamma ray of Sr^{85} in the Ca^{45} product has been of particular interest. The abundance of this nuclide has been lower than that noted before. Calcium-45 products now appear with 0.01% Sr^{85}; previously, the quantity of contaminant was at least 10 times this amount.

A Ni^{63} product (Ni^{63}-4 HSA) was prepared by the Operations Division from high-purity nickel that had been irradiated in the Hanford reactor. Examination of the dissolved Ni^{63}, before it was given any chemical treatment, indicated the presence of Co^{58}, which is produced by the reaction $Ni^{58}(n,p)Co^{58}$. The Co^{58} amounted to several per cent of the total original activity. After its presence was observed, the Co^{58} was removed from the sample by the Operations Division and the cobalt fraction examined. No Co^{60} was found, which indicated that the original nickel was cobalt-free. The Ni^{63} was re-examined after the cobalt separation, and approximately 0.01% Hg^{203} was found. The Hg^{203} was probably introduced from contaminated equipment during the Co^{58} separation. The application of the sodium iodide crystal spectrometer to the analysis of this one sample indicates the extreme range and versatility of the instrument.

Fission Products

Zirconium and Niobium in Thorex Samples (F. L. Moore). The proposed Thorex process will produce solutions that contain a high level of Pa^{233} activity. It is known that this element will interfere seriously with the radiochemical analyses for zirconium and niobium. In order to find the most effective pretreatment for the removal of Pa^{233}, several liquid-liquid extraction systems have been investigated. In these experiments, equal volumes (6 ml) of aqueous and organic phases were mixed for 15 minutes. The total amount of Pa^{233} activity originally in the aqueous phase was 9.9×10^5 gamma cpm. The results are given in Table 3. Each value is the average of the results of at least two determinations.

It has been found that zirconium carrier does not inhibit the extraction of Pa^{233} tracer from aqueous solutions by diisobutylcarbinol. When a solution containing a total Pa^{233} alpha activity of 2.4×10^6 cpm was pretreated by double extraction with diisobutylcarbinol under the conditions of acidity given in Table 3 and the extractions were followed by two "scavenges" with Nb_2O_5, less than 0.02% of the Pa^{233} followed through in a radiozirconium determination. If the

TABLE 3. EXTRACTION OF TRACER PROTACTINIUM-233 FROM AQUEOUS SOLUTIONS WITH VARIOUS ORGANIC REAGENTS

AQUEOUS PHASE	ORGANIC PHASE	Pa^{233} ACTIVITY EXTRACTED (%)
6 *M* HCl	5% MDOA*-xylene	95.0
	5% MDOA*-chloroform	88.5
	0.5 *M* TTA**-xylene	88.5
2 *M* HCl	0.5 *M* TTA**-xylene	95.8
6 *M* HNO_3	Diisopropylcarbinol, saturated with 6 *M* HCl	89.5
6 *M* HCl	Diisopropylcarbinol, saturated with 6 *M* HCl	99.6
	Diisobutylcarbinol, saturated with 6 *M* HCl	99.9

*Methyldioctylamine.

**Thenoyltrifluoracetone.

Thorex process sample was not pretreated to remove Pa^{233}, 66% of the Pa^{233} tracer was observed to follow through in the radiozirconium determination. Thus, additional extractions by the diisobutylcarbinol or additional precipitations of Nb_2O_5 may be used to effect any desired degree of decontamination of the zirconium from Pa^{233}.

The separation of niobium carrier from Pa^{233} is more difficult. It has been found that oxalic acid (niobium carrier is usually prepared in an oxalic acid solution) does not inhibit the extraction of Pa^{233} tracer from 6 *M* HCl with diisobutylcarbinol. However, when niobium carrier is mixed with Pa^{233} tracer, the extraction is poor. Experiments are in progress to determine whether other complexing anions are present in the carrier or whether the inhibition is actually a niobium-carrier effect.

Analysis for Heavy Elements

Plutonium Analysis by Alpha Counting (G. W. Smith). The comparison of the titration procedure with the alpha counting procedure for the analysis of plutonium product samples[28] was continued. The titration analyses of three of the samples were repeated. The results, corrected for iron error, are given in Table 4. Two of the new titration results agree well with the counting assays, perhaps fortuitously.

To check the procedures further, a "standard" plutonium solution was used that was prepared by L. T. Corbin by dissolving 1.0038 g of plutonium metal of 99.86% purity[29] in HCl and diluting the solution to 100 ml to give a solution containing 10.03 mg of plutonium per milliliter. The results of titration analyses on this solution averaged about 2% higher than the stated concentration, that is, about 10.2 mg of plutonium per milliliter. Counting assays were made by use of calibrated volumetric ware and polished platinum plates and were counted to ±0.6% reliable error as shown in Table 5. Based on 400 Mwd/t, the counting analyses are about 4% high; but because the specific activity of the plutonium is not known with any degree of certainty, the difference may be larger or smaller than 4%.

[28] G. W. Smith, "Plutonium Analysis by Alpha Counting," *Anal. Chem. Quar. Prog. Rep. Sept. 26, 1952*, ORNL-1423 (in press).

[29] Obtained from Los Alamos and stated to be 400 Mwd/t product (~360 g/t).

TABLE 4. TITRATION AND COUNTING ASSAYS OF PLUTONIUM PRODUCTS

SAMPLE CODE	PLUTONIUM CONCENTRATION (mg/ml)				
	Titration Assays		Counting Assays Calculated From		
	Original	New	g/t Level	Mass Analysis	Pulse and Mass Analyses
R8-R	28.91	26.79* 26.83	25.63	24.35	
Scrup-R3	20.07	19.30	19.24	19.89	19.41
Scrup-R5A	18.86	18.39	18.17	17.92	18.24

*Sampled by use of calibrated volumetric glassware.

TABLE 5. COUNTING ASSAYS* OF "STANDARD" PLUTONIUM SOLUTION**

PLATE NUMBER	PLUTONIUM CONCENTRATION (mg/ml)		
	At 300 Mwd/t	At 400 Mwd/t	At 500 Mwd/t
1	10.88	10.67	10.50
2	10.92	10.72	10.56
3	10.87	10.65	10.49
4	10.92	10.72	10.56
	Avg. 10.90	10.69	10.53

*Counting assays made by use of calibrated volumetric ware, polished platinum plates, and counted to ±0.6% reliable error.
**Contained 10.03 mg of plutonium per milliliter.

The data indicate that counting assays will agree with titration assays on pure plutonium solutions to within a few per cent if the plates that are counted are essentially weightless, the titration is made by use of properly calibrated equipment, and the specific activity of the plutonium is known.

Determination of Actinides in Radioisotopes (G. W. Smith). The scintillation alpha counter[30] and a counter similar to the standard Simpson alpha counter[31,32] were evaluated for the determination of actinides in radioisotope products. An alpha activity of 150 cpm/mc is tolerated in most radioisotope products. This means that if the radioisotope falls just within specifications, a 0.1-mc sample, if evaporated on a foil mount, would have a count of only 15 cpm. Direct plating seemed to be the simplest method for obtaining the alpha count and was therefore considered first. It is necessary that the plated sample be essentially weightless, that is, that its solids content be less than about 0.1 mg/cm^2. It is assumed that methods are available for the separation

(30) Designed and built by F. M. Glass of the Instruments Department group of the ORNL Instrument Division.

(31) J. A. Simpson, Jr., *The Proportional Alpha Counter*, CP-1527 (March 28, 1944).

(32) J. A. Simpson, Jr., *Manual for the Proportional Alpha Counter, Model 1-C*, CP-1817 (Aug. 25, 1945).

of the alpha emitters from solids that might be present in radioisotope products.

The accuracy of the Simpson-type instrument for alpha counting in low ranges is limited because large amounts of beta activity (1 r/hr) will give from 2 to 50 cpm above normal background, which is of the order of the alpha activity being determined. It was found that a Simpson-type alpha counter assembled from a standard, methane-gas flow chamber and a Nuclear Instrument and Chemical Co. model No. 162 scaling unit would tolerate 3 r/hr of beta activity with a maximum of about 1 cpm over normal background. The alpha count of plated radioisotopes in a quantity that does not exceed this beta activity could be determined with an accuracy that depends only on the solids content and the statistics of the total number of alpha counts taken.

The scintillation alpha counter used by the Operations Division was found to have a tolerance to 3 r/hr of beta radiation of about 0.1 cpm above normal background (zero), but to have only 14% counting yield as compared with the 52% that is characteristic of the Simpson-type alpha counter. The setting of the discriminator of the scintillation alpha counter is critical, and the counting yield is lower than that of the Simpson-type alpha counter by a factor of approximately 4. For these reasons, the assembly of the standard, methane-gas flow chamber and the model No. 162 scaling unit seems preferable for determining actinides in radioisotopes.

Rapid Method for UX in Uranium Solutions (S. A. Reynolds). It was desired to measure the degree of removal of UX activity (24-d Th^{234} and its daughter, 1.1-m Pa^{234}) from uranyl solutions in HRE loop tests. Because UX contributes essentially all the beta activity in recently (within a few years) purified natural uranium, a gross beta measurement[33] should suffice to give the desired information. The equation

$$\text{equilibrium amount of UX in solution (\%)} = \frac{100 \times \text{gross beta cpm/ml of uranyl solution}}{\text{g of U/liter of uranyl solution} \times 70 \text{ gross beta cpm/mg of U}}$$

was used to calculate the per cent of the equilibrium amount of UX that remained in solution. The numerical value 70 cpm/mg of uranium was determined by C. L. Burros by gross beta measurements on a uranyl solution of known concentration and with UX in equilibrium with the uranium.[34]

The above rapid method was checked by observing growth of UX in HRE fuel samples for several days. Comparative results for typical samples are presented in Table 6. The observed accuracy is adequate for the intended purpose.

TABLE 6. EQUILIBRIUM UX ACTIVITY IN HRE FUEL SOLUTIONS

SAMPLE	EQUILIBRIUM UX ACTIVITY (%)	
	From Gross Beta Measurements	From UX-Growth Measurements
1	5	3
2	~100	~100
3	4	6
4	15	13
5	54	48

Miscellaneous Analyses (F. L. Moore). Special analyses for alpha activities have been made on secret AEC samples. Assistance has been given to the control laboratories in the isolation and purification of plutonium.

[33] M. T. Kelley *et al.*, "Gross Beta Activity," *Manual of Analytical Procedures for the U^{235} Recovery Process*, Method No. 28, ORNL-983 (Aug. 20, 1951).

[34] C. L. Burros, unpublished results (1952).

Analysis of Cyclotron Products

T. H. Handley

The second phase of work on the determination of fission yield vs. mass curves[35] is virtually complete. The laboratory work has been completed, and counting data are to be assembled in proper form.

Good progress has been made in the study of (p,t) and (t,p) reactions.[36] A detailed topical report of this work will soon be issued.

A search for short-lived isotopes will be made by use of a closed, circulating system that is now being assembled.

HRP Analyses

Neutron Flux Determination of HR No. 1 (W. A. Brooksbank). All preliminary experimental work necessary for the determination of the neutron flux of HR No. 1 has been completed.[37] The analyses on the fuel will be made when the reactor operates at the desired power level.

Cesium-136 was chosen as the nuclide to be used in measuring the flux, for reasons already given. Glendenin reports the half life of Cs^{136} to be 13.7 d and the radiation to be a 0.35-Mev β^-, followed by two gamma rays in cascade, each of approximately 0.9 Mev energy.[38] No attempt was made to measure beta radiation from Cs^{136} for the purpose of flux determination because of the large amount of interfering Cs^{137} beta radiation. The scintillation spectrometer was used to measure the Cs^{136} gamma radiation in the presence of Cs^{137}. The gamma energies experimentally found were 0.830 ± 0.025 and 1.06 ± 0.02 Mev. The half life was found to be 14.2 d, a value that is in good agreement with that reported by Glendenin.[38]

As has been proposed,[37] three samples of HR No. 1 fuel, each containing about 10 mg of total uranium, were irradiated in hole C-44 of the LITR for 4 hr, but at three different power levels. The bombarding neutron fluxes, as measured by a cobalt-aluminum alloy, were 4.81×10^{12}, 9.73×10^{12}, and 1.69×10^{13} neutrons/cm^2·sec. A radiochemical cesium separation was made on the entire quantity of each bombarded sample, and the gamma spectrum of the separated cesium was determined by means of the scintillation spectrometer at settings of PHS = 505, gain = 4, and slit width = 1.00 volt. The area under the 1.06-Mev peak that is characteristic of Cs^{136} was evaluated graphically. The quantity of uranium that was bombarded was determined colorimetrically. The Cs^{136} activity was normalized to Cs^{136} activity per milligram of uranium and plotted against the neutron flux of the LITR. The resulting calibration curve shown in Fig. 10 will be used to determine

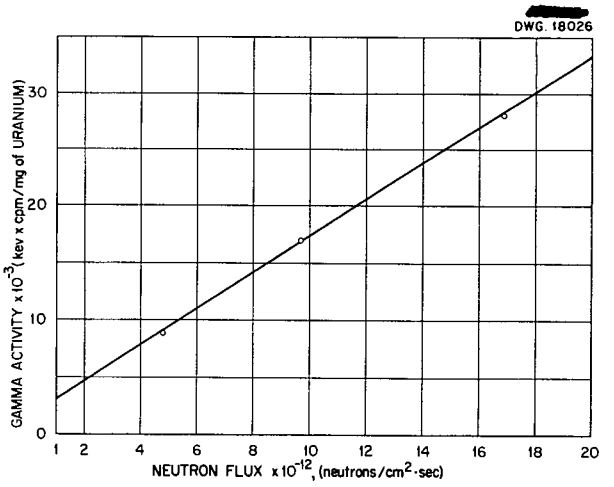

Fig. 10. Reactor Neutron-Flux Calibration Curve. Based on the 1.06-Mev gamma radiation of cesium-136.

(35) T. H. Handley, "Analysis of Cyclotron Products," *Anal. Chem. Quar. Prog. Rep. March 26, 1952*, ORNL-1276, p. 33.

(36) B. L. Cohen and T. H. Handley, *An Experimental Search for the Dineutron. Part I. Search for a Stable Dineutron*, ORNL-1382 (Sept. 23, 1952).

(37) W. A. Brooksbank, "Flux Determinations for the Homogeneous Reactor," *Anal. Chem. Quar. Prog. Rep. March 26, 1952*, ORNL-1276, p. 34.

(38) L. E. Glendenin, *The Distribution of Nuclear Charge in Fission*, Technical Report No. 35, Laboratory for Nuclear Science and Engineering, MIT, p. 23-8 (Dec. 12, 1949).

the neutron flux of the HR No. 1. This will require that a Cs^{136} blank be determined on a sample of HR No. 1 fuel before a given period of operation of the reactor in order to correct for the Cs^{136} present from previous reactor operation. When this blank is subtracted from the Cs^{136} found in the fuel after the 4-hr operating period and the resulting value is corrected to Cs^{136} activity per milligram of uranium in the fuel, the final corrected value may be used to determine the neutron flux of the HR No. 1 from the calibration curve of Fig. 10.

Ion Exchange and Chromatography

G. W. Smith

Analysis for Rare Earth Activities in Barium-140-Lanthanum-140. A request is occasionally made for the determination of the rare earth content of Ba^{140}-La^{140} product. Because ion exchange seemed to be the only suitable method of effecting a rare earth separation, the ion-exchange techniques of the Manhattan Project[39] were considered.

Several ion-exchange experiments that were made by use of Ce^{144}-Pr^{144} and La^{140} tracers as adjacent elements have shown that elution of the test solution through a 120- to 170-mesh Dowex-50 resin column, 10 by 0.23 cm, with an ammonium citrate solution (50 g of citric acid per liter) of pH approximately 3.2 effects a complete separation of the rare earths from lanthanum in one day. It is believed that a routine method can be developed that uses this type of column, a flow pipet, a count rate meter, and a recorder.

Application of Paper Chromatography in Radioisotope Analysis. A method is needed for the determination of total nickel in Cr^{51} product. Both elements are present in macro amounts in the product. The nickel is sometimes present in amounts equivalent to 2% of the chromium. A paper chromatographic method was thought to be applicable for the nickel-chromium separation, especially if the nickel could be eluted from the paper strip without movement of the chromium.

Preliminary experiments with a collidine-0.4 *N* HNO_3 mixture (1:1 by volume), according to Elbeih, McOmie, and Pollard,[40] showed that nickel moves with the liquid front and that chromium does not. The locations of the nickel and the chromium were determined by means of hydrogen sulfide and an ultraviolet lamp source, respectively. It seems probable that a suitable method can be developed by which collidine or some more volatile solvent is used to elute the nickel from a paper strip for subsequent colorimetric determination.

ACTIVATION ANALYSIS

G. W. Leddicotte

Determination of Trace Quantities of the Rare-Earth Elements (W. A. Brooksbank, G. W. Leddicotte). The usefulness of radioactivation analysis in determining trace quantities of the rare-earth elements has been reported by a number of investigators. Hevesy and Levi[41] have shown that individual rare earths can be determined in rare-earth mixtures. Others, including Ketelle and Boyd,[42] have separated all the components of rare-earth mixtures by ion exchange. This technique offers a starting point for routine, quantitative determinations

(39) For bibliography see F. C. Nachod, *Ion Exchange*, p. 221-2, Academic Press, New York, 1949.

(40) I. I. M. Elbeih, J. F. W. McOmie, and F. H. Pollard, "The Application to Qualitative Analysis of the Separation of Inorganic Metallic Compounds on Filter Paper by Partition Chromatography," *Discussions Faraday Soc.* **7**, 183 (1949).

(41) G. Hevesy and H. Levi, "The Action of Neutrons on the Rare Earth Elements," *Danske Videnskab. Selskab. Math.-fys. Medd.* **14**, No. 5 (1936).

(42) B. H. Ketelle and G. E. Boyd, "The Exchange Adsorption of Ions from Aqueous Solutions by Organic Zeolites," *J. Am. Chem. Soc.* **69**, 2800 (1947).

of the rare-earth elements in a variety of samples, such as ores and biological materials, by neutron-activation analysis. However, certain factors require consideration before routine analyses can be effected by the combined use of these methods.

Theoretically, the rare-earth elements can be detected by normal radioactivation analysis methods in quantities of the order of 10^{-11} to 10^{-8} gram. However, with few exceptions, the half lives range from a few minutes to a few days. Therefore it is necessary to consider the practical sensitivity of detection, that is, whether a measurable amount of activity is present within some time interval after discharge of the sample from the reactor, because the separation procedure could require as much time as 48 hours.

The reported[43] cross sections, that is, the probabilities of the nuclear reactions occurring, for the (n,γ) reactions of certain of the rare-earth elements are not known with accuracies better than 20 to 40%. This might cause overestimation of the detection sensitivity of the procedure.

As already indicated, a long time is required for the separation of each member of this element group. The procedure of Boyd and Ketelle effects the separation of a 270- to 325-mesh Dowex-50 resin column, 0.26 cm^2 by 97 cm, at 100°C by use of 5% ammonium citrate buffer of pH 3.2 to 3.4. The use of other complexing agents and new elution techniques should be considered.

Side reactions must be utilized for the determination of certain of the individual rare-earth elements. For example, the end products of the reactions

$$Dy^{164} \xrightarrow{n,\gamma} Dy^{165} \xrightarrow{n,\gamma} Dy^{166} \xrightarrow[81\ h]{\beta^-} Ho^{166}\ (27.3\ h) \qquad (1)$$

$$Gd^{160} \xrightarrow{n,\gamma} Gd^{161} \xrightarrow[3.6\ m]{\beta^-} Tb^{161}\ (\sim 7.3\ d) \qquad (2)$$

$$Nd^{148} \xrightarrow{n,\gamma} Nd^{149} \xrightarrow[1.7\ h]{\beta^-} Pm^{149}\ (47\ h) \qquad (3)$$

are used for the determination of dysprosium, gadolinium, and neodymium, respectively. The interference from the end product of the first reaction must be considered in the holmium determination, which employs the reaction

$$Ho^{165} \xrightarrow{n,\gamma} Ho^{166}\ (27.3\ h)\ .$$

The decay schemes of all the rare-earth radioactivities become factors in achieving a practical sensitivity of detection for these elements. Some study of these complex decay schemes is a necessary part of the investigation.

The preliminary separation of the rare-earth group from other constituents in a sample must also be considered. Quantitative separations by use of a known amount of an inactive carrier, such as cerium, should be possible. By such a procedure, the cerium-rare-earth precipitate is dissolved and an aliquot of the solution is first taken for the ion-exchange separation of the rare earths. Another aliquot is then used to determine the recovery of the carrier, and thereby the rare earths, from the group separation.

(43) K. Way, L. Fano, M. R. Scott, and K. Thew, *Nuclear Data*, NBS Circular No. 499, p. 268 (Sept. 1, 1950).

A method is now being investigated that employs the group and individual rare-earth separation procedures just described. The optimum conditions for the elution of the individual rare earths from the ion-exchange column and for their subsequent quantitative determinations will be established. G. E. Boyd of the Chemistry Division has furnished samples of all the stable rare-earth elements for this investigation. To date, optimum elution conditions and calibrations have been obtained for radionuclides of holmium, erbium, dysprosium, europium, lutetium, and thulium.

Determination of Trace Quantities of Rare-Earth Elements in Metals and Animal Tissue (W. A. Brooksbank, G. W. Leddicotte). Trace amounts of cerium, dysprosium, and neodymium in thorium metal have been semiquantitatively estimated by radioactivation analysis supplemented with an ion-exchange separation. Cerium, neodymium, and lanthanum were detected in the same material by spectrographic analysis. It is assumed that the failure of radioactivation analysis to detect lanthanum could be attributed to the decay of the 40-h La^{140}, which has a considerably shorter half life than the half lives of those radioisotopes of cerium, dysprosium, and neodymium that were employed in the activation analysis.

Radioactivation analysis, supplemented with an ion-exchange method, is being applied to the determination of rare-earth elements in hard and soft animal tissues. The presence of some of these elements was detected in bone, but with difficulty, because the amounts of radioactivity in the eluates from the ion-exchange column were generally lower than those detectable by ordinary solution-flow counting equipment.

Determination of Trace Quantities of Cobalt, Arsenic, and Strontium in Animal Tissue (W. A. Brooksbank, G. W. Leddicotte, H. A. Mahlman). Trace quantities of cobalt, arsenic, and strontium have been determined in animal tissue or homogenates of crude animal tissue by radioactivation analysis. All these elements were separated from the sample by precipitation methods after the irradiated material had been put into solution. A discussion of the analysis for each follows.

In the determination of cobalt, samples of tissue and homogenates of tissue were irradiated for two weeks in the ORNL graphite reactor. After the irradiation, the samples were dissolved in a mixture of concentrated H_2SO_4 and HNO_3. Known amounts of inactive cobalt as a carrier for the cobalt activity, and iron, copper, strontium, and sodium holdback carriers were added to the solution and the solution was concentrated. After a series of scavenging steps for the holdback carriers, the radioactive cobalt plus the inactive cobalt was isolated as potassium cobaltinitrite, the solution filtered, the precipitate dried at 110°C, and the yield calculated from the formula $K_3Co(NO_2)_6 \cdot H_2O$ (12.3% cobalt). The radioactivity produced by the nuclear reaction, $Co^{59}(n,\gamma)Co^{60}$ (5.3 y) in the unknown samples was compared with the Co^{60} radioactivity in a standard sample of cobalt metal that was processed under the same conditions. The radioactivity was measured by means of a gamma scintillation counter. Concentrations of cobalt as small as 0.01 ppm were determined with a precision of better than 10%.

Strontium was determined in samples of hard (bone) and soft (liver, heart, spleen, etc.) animal tissues that were irradiated for 2.5 hr in the ORNL graphite reactor. The slow-neutron irradiation of Sr^{86} will produce 2.7-h

Sr^{87m}. After the irradiation, the samples were dissolved in concentrated HCl and a known amount of inactive strontium carrier as a carrier for the strontium activity and iron, copper, barium, and sodium holdback carriers were added. The solution was then processed by the procedure given in a previous report.[44] Comparative samples containing known amounts of strontium were irradiated and processed in the same way. Some results obtained by this analysis are reported in Table 7.

TABLE 7. DETERMINATION OF STRONTIUM IN BONE

SAMPLE	STRONTIUM (ppm)
1	6.1, 5.6, 6.1
2	33.2, 31.0, 31.0
3	45.6, 45.9, 45.4
4	58.5, 62.9, 61.3

Trace amounts of arsenic have been determined in animal tissue after the irradiation of the samples in the ORNL graphite reactor for approximately 16.0 hours. The slow-neutron bombardment of As^{75} will produce 26.8-h As^{76}. After the irradiation, the samples were dissolved in concentrated HNO_3, inactive arsenic was added as a carrier for the arsenic activity, and iron, copper, sodium, and barium holdback carriers were added. The sample was then transferred to a 50-ml centrifuge tube and the $BaSO_4$ centrifuged out and discarded. Sulfuric acid was added and the volume of the solution reduced until heavy fumes of H_2SO_4 appeared. The radioactive and inactive arsenic were then precipitated as the sulfides. The sulfide precipitate was dissolved in concentrated HNO_3, and the arsenic precipitated as $MgNH_4AsO_4 \cdot 6H_2O$. The precipitate was dried 30 min at 100°C and weighed as $MgNH_4AsO_4 \cdot 1/2H_2O$. The amount of arsenic in the sample is determined by comparing the radioactive As^{76} in the unknown with that found in a known amount of arsenic processed in the same way. Concentrations of arsenic from 1 to 35 ppm were determined in a series of samples by this method.

Determination of Trace Elements in Soils and Water (H. A. Mahlman, G. W. Leddicotte). The usefulness of radioactivation analysis in detecting and determining trace amounts of molybdenum in soil and of uranium in water and river mud has been demonstrated. A brief discussion of the applications follows.

Samples of soil were irradiated in the graphite reactor for 62 hours. In this time, sufficient radioactive Mo^{99} was produced by the nuclear reaction $Mo^{98}(n,\gamma)Mo^{99}$ ($t_{1/2}$ = 67 h) to be determined by the following procedure. The soil sample was digested in a mixture of hot concentrated H_2SO_4, $HClO_4$, HNO_3, and HF. Additional HF was added to convert the excess silicon into the volatile fluoride. After the soil was dissolved, the solution was concentrated until heavy fumes of H_2SO_4 appeared. Standardized molybdenum carrier and holdback carriers of iron, copper, sodium, and strontium were added, and the solution was carried through a series of scavenging steps to remove extraneous radioactivities. The molybdenum was finally precipitated as Ag_2MoO_4, and the precipitate was filtered, dried, weighed, and counted. The radioactivity that was due to the Mo^{99} in the unknown and to the Mo^{99} in a comparative sample of molybdenum metal that was processed in the same way was counted on a gamma scintillation counter. The ratio of these activities gave the concentration of the molybdenum in the unknown sample. Concentrations of molybdenum of the order of 0.1 to 1.0 ppm can be determined in this manner with a precision of 10% or better.

[44] G. W. Leddicotte, "Strontium," *Anal. Chem. Quar. Prog. Rep. June 26, 1951*, ORNL-1113, p. 41.

Samples of river mud and water were irradiated in the graphite reactor for 16 hours. In this time, sufficient radioactive Np^{239} was produced by the nuclear reaction $U^{238}(n,\gamma)U^{239} \xrightarrow[23.5\,m]{\beta^-} Np^{239}$ ($t_{1/2}$ = 2.33 d) to permit the determination of trace amounts of uranium. The analytical procedure used was similar to that reviewed in a previous report.[45] Concentrations of uranium of the order of 10 to 100 ppm were determined in a series of samples from rivers and dams of the Tennessee Valley.

Determination of Trace Amounts of Aluminum in Rubber (H. A. Mahlman). Trace amounts of aluminum may be determined, with considerable precision, qualitatively and/or quantitatively by radioactivation analysis. The nuclear reaction $Al^{27}(n,\gamma)Al^{28}$ ($t_{1/2}$ = 2.3 m) produces sufficient radioactivity to permit the determination of aluminum with the equipment described in the previous report.[46]

The following procedure was used for the determination of aluminum in rubber. Samples of the rubber were irradiated in the graphite reactor for 2.3 minutes. This irradiation time is the most advantageous because the desired radioactive isotope is then at 50% of its saturated activity value and isotopes of longer half lives will not have been formed in any appreciable amount. This, of course, precludes the possibility that those nuclei undergoing (n,γ) type of reactions to form long-lived isotopes are present in low concentrations and do not possess abnormal thermal-neutron cross sections.

If quantitative determinations are desired, a known quantity of pure type 2S aluminum metal can be irradiated simultaneously with the unknown sample. This serves effectively as a control sample, resolving such variables as fluctuations in pile power and neutron-flux depression caused by the proximity of materials with high neutron cross sections. After irradiation, the unknown and control samples are quickly mounted on scotch tape that is stretched across a cardboard mounting card. The samples are counted alternately for 1-min intervals. The radioactivity is recorded as counts per minute by means of a Brown recorder. When the activity in the unknown has decayed to a nearly constant value, the recorder chart is removed and analyzed graphically. The aluminum present in the unknown is calculated from the ratio of the amount of the Al^{28} in the unknown to that in the known. Both quantities are corrected to the same time by use of the decay law $A = A_0 e^{-\lambda t}$, so that the radioactive aluminum found will be directly proportional to the amount of inactive aluminum present in either material. For convenience, the t value used is the time that the sample was discharged from the reactor.

New Applications of Neutron Radioactivation Analysis (G. W. Leddicotte). The public announcement of activation analysis service has evoked inquiries regarding the suitability of the method for the determination of trace amounts of elements in paints, pigments and related materials, baby cereals, grains, flour and wheat products, and in vinylite resins; copper in heart muscle; iodine in homogenates of rat tissue; arsenic in catalytic agents; zinc in animal tissue; and trace amounts of sulfur and other elements in rubber.

---

(45) H. A. Mahlman and G. W. Leddicotte, "Determination of Natural Uranium (U^{238}) by Radioactivation Analysis," *Anal. Chem. Quar. Prog. Rep. June 26, 1952*, ORNL-1361, p. 21.

(46) W. A. Brooksbank and G. W. Leddicotte, "Determination of Trace Elements by Means of Their Short-Lived Radioisotopes," *Anal. Chem. Quar. Prog. Rep. Sept. 26, 1952*, ORNL-1423 (in press).

SPECTROCHEMICAL ANALYSES

C. Feldman
J. Y. Ellenburg M. Murray
A. J. Estepp M. K. Wittels

Determination of Rare Earths in Thorium. The cellulose-column procedure[47] for the isolation of microgram quantities of rare earths present in thorium metal gave a product that contained too much thorium, calcium, and magnesium to permit the accurate determination of rare earths. This residual thorium was removed by passing the product through a second cellulose column by use of the same procedure as was used for the first run. The column was then ignited, the ash dissolved in approximately 100 ml of dilute HCl, and the solution treated with 10 mg of iron carrier as $FeCl_3$. The iron and rare earths were then precipitated as the hydroxides by adding carbonate-free NH_4OH that was freshly prepared from gaseous NH_3 and distilled water. This precaution was used to prevent the coprecipitation of $CaCO_3$ and/or $MgCO_3$ with the hydroxides. The hydroxide precipitate was removed by filtration, washed with water containing a few drops of ammonium hydroxide, and dissolved in approximately 20 ml of 9 *N* HCl. This solution was passed through a Dowex-1 anion-exchange column to remove the iron. The eluate was boiled down to a 1-ml volume, treated with 75 μg of cobalt(II) as internal standard, and exposed by the porous-cup technique. In order to test the recovery of rare earths, a thorium sample was dissolved and the solution divided into two aliquots. A quantity of CeO^{++} equivalent to 7.2 ppm of cerium referred to the thorium metal was added to one aliquot. Results of this analysis are presented in Table 8 and are compared with results obtained previously on another portion of the same material. In the previous analysis, the thorium was extracted from the rare earths with TBP.

Determination of Rare Earths in Stainless Steel. The rare earth content of five stainless steel samples submitted by the General Electric Co. was determined. A 1-g sample was dissolved and the solution evaporated barely to dryness. The residue was treated repeatedly with concentrated HNO_3 until it was free of chlorides. Ten milliliters of 20% H_2SO_4 was added and the mixture warmed to dissolve as much of the residue as possible. The solution was then diluted to approximately 150 ml, treated with 2 to 3 ml of 6% SO_2 solution, and electrolyzed at 1.7 amp until it was free of iron, nickel, and chromium. It was then concentrated, freed of silica with HF, boiled with concentrated $HClO_4$ to decompose any remaining carbides, and with H_2SO_4 to

(47) E. J. Center, W. M. Henry, and R. Householder, *Determination of Rare Earths in Thorium*, BMI-260 (May 15, 1952).

TABLE 8. COMPARISON OF CELLULOSE COLUMN AND TBP EXTRACTION PROCEDURES FOR SEPARATING TRACES OF RARE EARTHS FROM THORIUM

SEPARATION METHOD	CONDITIONS	AMOUNT FOUND (ppm)		
		Ce	La	Nd
TBP extraction		18.4	3.5	
Cellulose column	Aliquot 1, no Ce added	27.3	5.9	7.0
	Aliquot 2, 7.2 ppm of Ce added	35.0	5.5	7.0

dissolve any hydrated tantalum and/or niobium oxides. This solution was then diluted with 10% H_2SO_4 and treated with sufficient cobalt to give a concentration of 75 ppm. Cerium and lanthanum were determined in the 50- to 500-ppm range (relative to the steel) by the porous-cup technique. The same solution-preparation technique is being investigated for the determination of niobium and tantalum in stainless steels.

Determination of Traces of Boron. Boron in artificial graphite must be assumed to be present as boron carbide. Standards for this determination were therefore prepared by grinding boron carbide with boron-free graphite or carbon powder containing gold as the internal standard. Moving-plate exposures have shown that although the volatilization curves of gold and boron as boron carbide differ appreciably, the intensity ratio

$$\frac{\text{B } 2497.7}{\text{Au } 2427.95}$$

can be reproduced to within ±3.5% by burning a 10-mg charge at 9 amp in a Strock type of carbon electrode. The danger of erratic results inherent in the wandering of the arc was avoided by use of a spherical lens at the stigmatic position of the spectrograph to focus an image of the source on the collimator. Tests of the homogeneity of the standard mixture are not complete, but present evidence indicates that the method has a sensitivity of well below 1 ppm of boron in graphite, a value corresponding to an absolute sensitivity of less than 0.01 μg of boron.

Moving-plate exposures of a boron-in-graphite standard prepared by evaporating a H_3BO_3 solution on powdered graphite indicate that most of the boron is converted to the carbide before volatilization.

In the case of aluminum, preliminary experiments showed that (1) microgram quantities of boron as BO_3^{---} could be recovered quantitatively from solution by coprecipitation on $CaCO_3$ in alkaline solution, (2) metallic boron is easily soluble in NaOH solution, and (3) a sensitivity limit of 1.5 ppm of boron in CaO can be reached by burning a mixture of 2 mg of CaO (containing boron as $Ca_3(BO_3)_2$) and 8 mg of carbon under the conditions that were outlined above for graphite. This corresponds to an absolute sensitivity of 0.003 μg of boron. The following procedure was therefore adopted. A 3-g sample of aluminum was transferred to a 300-ml quartz dish and dissolved in a suitable volume of NaOH solution. Four milligrams of calcium(II) was then added as $CaCl_2$, and CO_2 was bubbled through the solution until precipitation of $CaCO_3$ (+$Ca_3(BO_3)_2$) appeared to be complete. The precipitate was filtered, washed free of sodium ions, ignited to CaO, and burned in the d-c arc as indicated. Under the conditions given, the sensitivity of detection is 0.002 ppm of boron in aluminum. It is planned to adapt this technique to the determination of boron in thorium, uranium, and other materials.

Determination of Traces of Precious Metals in Native Iron. Sensitivity limits in graphite matrix were determined for the metals listed in Table 9. The standard mixture was prepared by evaporating a solution containing these elements on graphite powder and heating this mixture at 600°C for 1 hr in a stream of H_2 to reduce them to metallic form.

In order to explore the cyanogen band region, several sensitivity tests were made in argon and oxygen atmospheres. The argon atmosphere lowered the arc temperature to an extent that unduly prolonged the volatilization of the metals; the oxygen atmosphere eliminated the CN bands without sacrificing sensitivity.

TABLE 9. SENSITIVITY LIMITS FOR PRECIOUS METALS BY THE DIRECT-CURRENT ARC AND POROUS-CUP TECHNIQUES

ELEMENT	MOST SENSITIVE LINE (Å)	APPROXIMATE ABSOLUTE SENSITIVITY (μg)	
		Direct-Current Arc with Graphite Matrix	Porous-Cup Electrode
Ag	3280.7	0.005	0.2
Au	2675.9	0.4	4.0
Pt	2659.4	0.4	7.0
Ir	2543.9	0.5	20.0
Rh	3434.9	0.1	3.0
Pd	3404.6	0.05	2.0
Ru	3436.7	1.0	20.0

INORGANIC PREPARATIONS

D. E. LaValle R. H. Sampley

Solid Solutions of Uranium Trihalides in Lanthanum Halides (D. E. LaValle). The studies of the solid solutions of uranium trihalides in lanthanum halides, thus far prepared for the Nuclear Physics and Low Temperature group of the Physics Division, resolved several problems and determined the requirements for the final experiments. The analysis for trivalent uranium has been successfully worked out by J. M. Chilton of the Ionic Analyses group. It was found that in the solutions of UCl_3, approximately two-thirds of the uranium had been lost by sublimation, and in the solutions of UF_3, approximately one-half was lost. Since no apparent difference in final results is obtained with either compound, it was decided to use UF_3 henceforth.

A large amount of anhydrous $LaCl_3$ was made. The problem of the flecks of carbon that had persisted in previous preparations was solved by distilling the anhydrous material at 1000°C. The Physics Division found that in the use of the solid solutions in the low-temperature apparatus, crystal orientation occurred in the magnetic field. This difficulty was overcome by using a new capsule designed to permit better packing, and by grinding and screening the solid solution to 30-mesh size.

For the final experiments, it was decided that four solid solutions of UF_3 of approximately 1, 4, 8, and 12 mole % in $LaCl_3$ were required. To approximate the 12 mole % solution, a starting mixture of 22 mole % was used. The analysis of this material after fusion showed 13.46 wt % uranium, 13.30% of which was in the trivalent form. The resulting solution, therefore, was 14.10 mole % UF_3. At present, this material is under study by the Physics Division. To determine whether tetravalent uranium has any influence in these experiments, a product of 10 mole % UF_4 was prepared and submitted for study.

Chromium Metal from Cr_2O_3. In connection with a proposed study of some stable isotopes of chromium, the Neutron Diffraction group of the Physics Division requested a preparation of chromium metal from Cr_2O_3. The material is to be received from the Y-12 site in the form of the ignited oxides. The electrolytic methods seemed to be the most feasible, and

three such methods were considered. In each case, the Cr_2O_3 was dissolved by treatment with $HClO_4$. Electrolysis into a mercury cathode was tried after reduction of the chromic acid with H_2O_2. This method has been unsuccessful to date because of the difficulty of lowering the acidity sufficiently without precipitating the hydroxide. Solid $Cr_2(SO_4)_3$ was prepared in order to overcome this difficulty, but the waste and salvage involved in the preparation would be a problem in the conversion of the isotopes. The well-known method of chrome-plating from a bath of chromic acid and copper cathodes was used to prepare 10 g of chromium, but the metal that was deposited in the last stages of electrolysis was spongy. This material has been submitted to the Physics Division for investigation. The plating-out of chromium on copper cathodes from trivalent chromic sulfate solutions will also be attempted.

Purifications and Preparations (R. H. Sampley). Large quantities of lithium chloride and ammonium carbonate were purified for use in the preparation of lithium carbonate and lithium fluoride. Hydriodic acid, lithium iodide, ammonium fluoride, and small quantities of the halides of the rare earths were also prepared. Much exploratory work in preparing phosphors, by use of lithium carbonate, lithium chloride, lithium fluoride, and lithium iodide as bases that were activated with the halides of the rare earths, was done for the Physics Division.

OPTICAL AND ELECTRON MICROSCOPY

T. E. Willmarth
F. D. McNeer I. H. Gary

A recent problem of interest in electron metallography was the preparation of replicas to show the nature of lamellar pearlite in the nodular structure of type B-23 steel. This work emphasized the criticalness of etching time in the replication of surface detail of a metal that contained more than two constituents.

The preliminary steps necessary to the examination of the steel included coarse-polishing and fine-polishing of the sample by the method of Kehl,[48] etching, and replicating. The etchant was an $FeCl_3$-HCl-methanol solution recommended by Grube.[49] The replicating material was polyvinyl alcohol, which gives a negative replica from which a positive formvar replica is made; the polyvinyl alcohol is dissolved off in water.

The polished sample was prepared for optical metallographic examination by being etched for the standard time of 20 seconds. It was found that although good contrast was achieved for optical microscopy at high power by use of an oil-immersion objective of NA 1.32, the fine detail of the nodules was not resolved. All attempts to strip replicas for electron microscopic examination from a surface thus treated were unsuccessful.

The optimum etching time required to form a surface from which an undamaged replica film, suitable for electron microscopy, could be removed was determined by varying the etching time of a sample of type B-23 steel from 2 to 20 seconds. The $FeCl_3$-HCl-methanol etchant was used. The sample was repolished after each etching, and if a replica could be obtained, the approximate minimum lamellar spacing was observed. It was found that stripping of replicas was impossible if the etching period had been longer than 10 seconds. Etching periods of 6 to 10 sec produced surfaces from which replicas could be stripped, but electron microscopic examination of the replicas showed strain lines and

(48) G. L. Kehl, *The Principles of Metallographic Laboratory Practice*, 3rd ed. Ch. 1, McGraw-Hill, New York, 1949.

(49) W. L. Grube, "Useful Etchants for Electron Metallography," *Trans. Am. Inst. Mining and Met. Engrs.* **191**, 1171 (1952).

distorted structure. Periods of 3 to 6 sec gave surfaces from which replicas were easily removed without distortion; also, the detail was good and the contrast was such that shadowcasting was not necessary for the production of electron micrographs. The minimum time required for disclosure of the metal structure by selective attack on the steel by the etchant was found to be 2 to 3 sec; however, some difficulty was encountered in stripping replicas from surfaces etched less than 3 seconds. The influence of etching time on replica production from fine pearlitic steel is summarized graphically in Fig. 11. These results agree closely with those that Nutting and Cosslett[50] that were obtained by use of a picral etchant on steel of approximate minimum lamellar spacing greater than 2000 Å. Extrapolation of their results indicated good agreement with those of Fig. 11. Regardless of the etchant used, short etching periods of close tolerance are necessary if finely detailed and easily removable replicas are to be obtained. Optical and electron micrographs of the steel are given in Fig. 12.

The study of oxide films prepared under a variety of conditions has continued. Of these, the film obtained by G. H. Cartledge of the Chemistry Division on type 347 stainless steel by use of technetium as an inhibitor is perhaps of greatest interest. A small sample of steel on which such a film had formed was examined with the optical microscope. The film displayed interference colors, which indicated that its thickness was only approximately 300 to 700 Å and was very uniform. Attempts to remove this film for electron microscopy and diffraction studies by stripping in a HBr-methanol electrolyte were unsuccessful. The film came off in segments too small for collection on the 200-mesh screens required for electron microscopy.

[50] J. Nutting and V. E. Cosslett, "The Dry Stripping of Formvar Replicas from Etched Metal Surfaces," p. 65-74 in *Metallurgical Applications of the Electron Microscope*, The Institute of Metals, London, 1950.

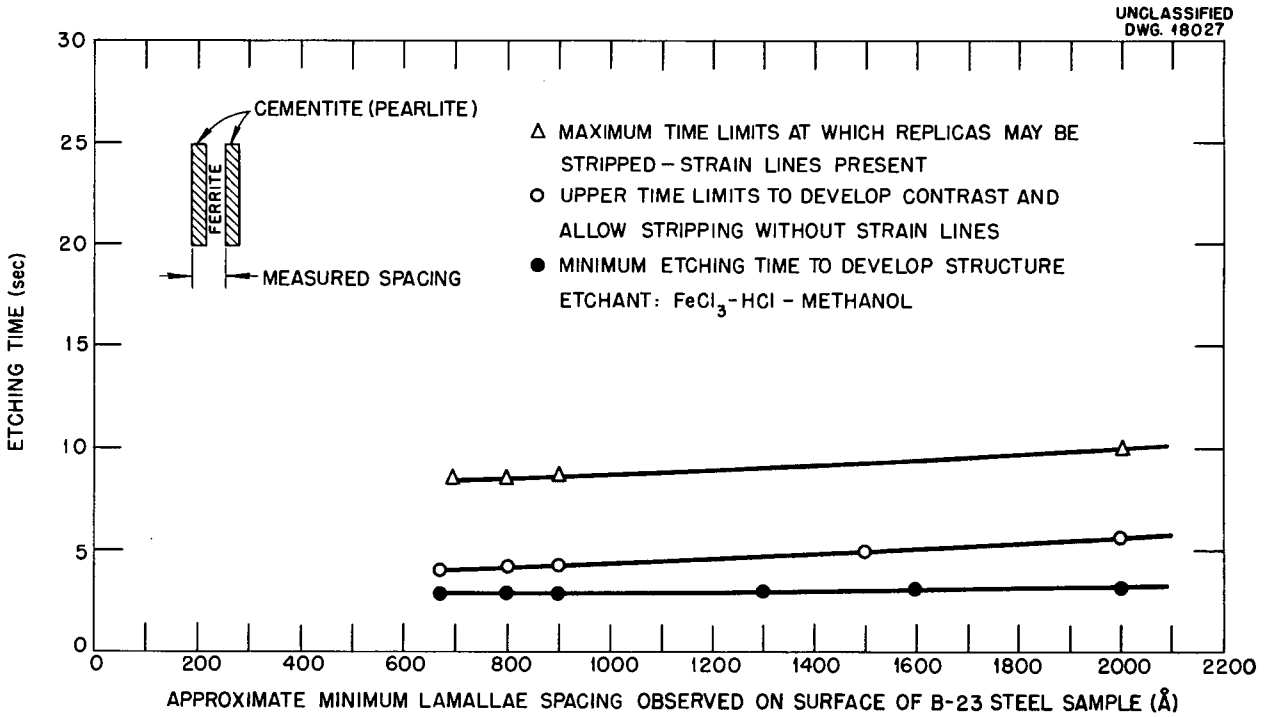

Fig. 11. Effect of Time of Etching of Pearlitic Steel on Removal of Polyvinyl Alcohol Replicas by Dry Stripping.

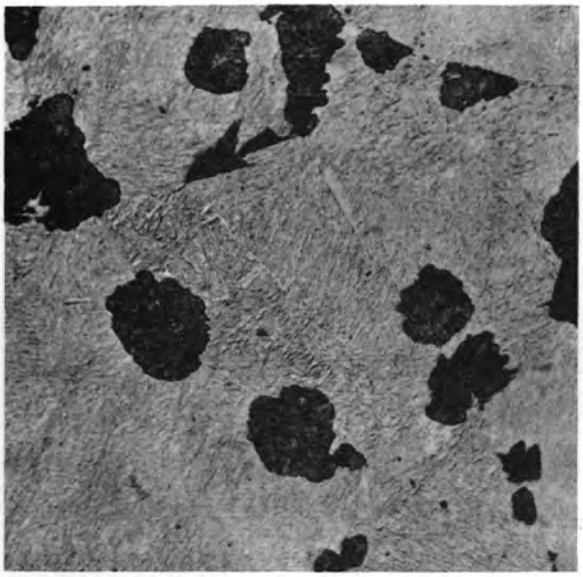

B-23 Steel Showing Nodular Pearlite.

100 μ

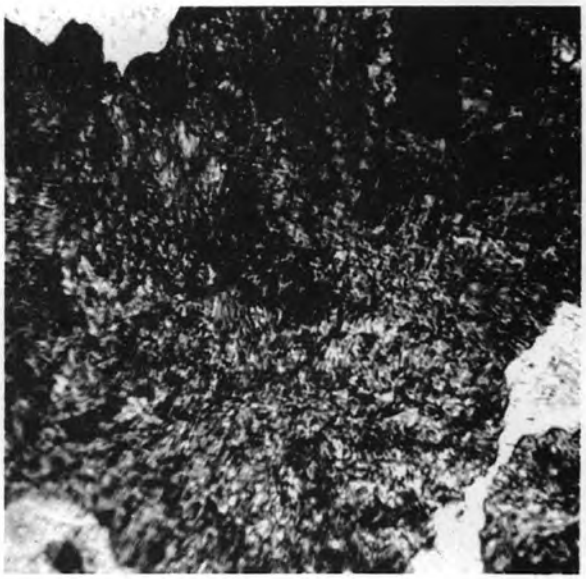

Optical Micrograph of Nodule. 2000X

10 μ

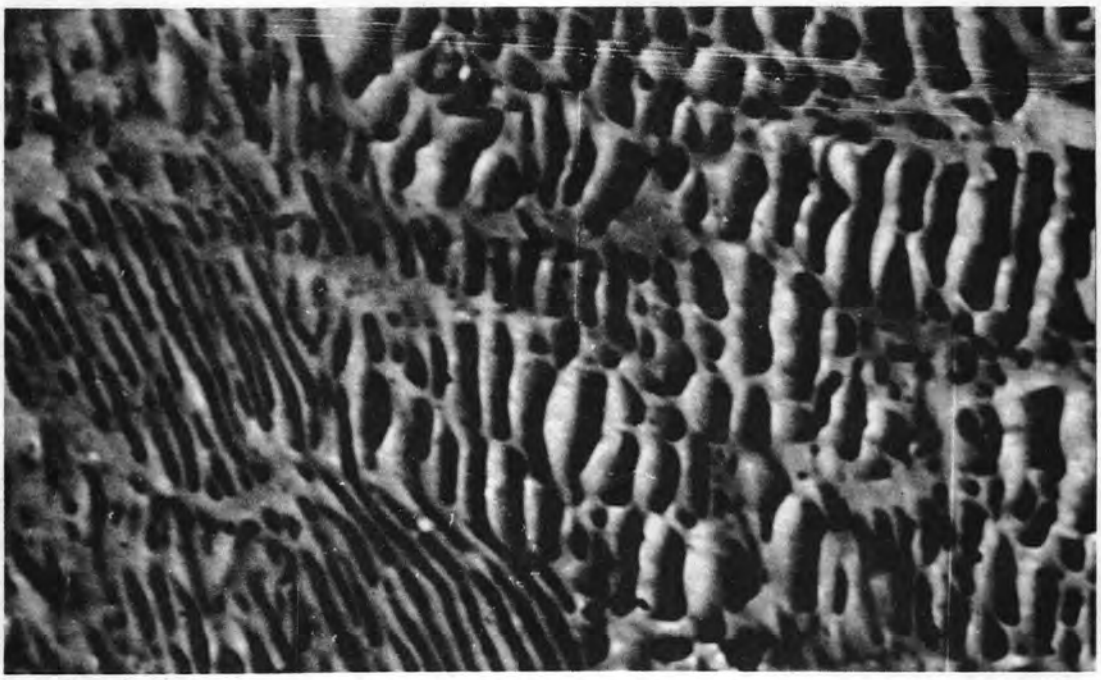

Electron Micrograph of Small Area of Nodule. 35000X

1 μ

Fig. 12. Optical and Electron Micrographs of Type B-23 Steel.

Fig. 13. Electron Micrograph of Cytoplasmic Particles of *Escheichia coli*. 100,000X.

Other samples of this film are being prepared for use in developing a suitable stripping technique.

Electron microscopy has also been employed in a Biology Division problem in which the size of cytoplasmic particles from *Escherichia coli* was needed. Figure 13 is an electron micrograph of these particles. Other work has included numerous optical and electron studies of $UO_3 \cdot H_2O$ in which particle size and shape factors were of importance. Particle-size determinations have been made of PuO_2, natural LiF, LiF bombarded in a graphite reactor, LiF heated in an open flame after irradiation, and NaCl crystals. Observations of the surface of electrolytically polished nickel have been made.

SERVICE ANALYSES

A summary of the service analyses made at the X-10 Analytical Chemistry Division laboratories is given in Table 12.

IONIC ANALYSES

P. F. Thomason

The service work by the Ionic Research and Development group consisted primarily of analyses performed for the Orex process. The discussion of methods will be contained in a forthcoming report.

RADIOCHEMICAL ANALYSES

S. A. Reynolds

Many analyses of cyclotron-bombarded materials were performed for the Electromagnetic Research Division. As in the past, radioisotope analyses and identifications were done for the Operations Division. Special plutonium analyses and fission-product and protactinium identifications were performed for the Chemical Technology Division. UX identifications and assays and fission-product analyses were done for the Reactor Experimental Engineering Division.

ACTIVATION ANALYSES

G. W. Leddicotte

Analyses were made for sodium in aluminum, barium in process solutions, strontium in animal tissue, uranium on paper chromatograms, and vanadium in petroleum and related materials.

GENERAL RADIOCHEMICAL ANALYSES

C. L. Burros

The major portion of radiochemical analyses was done for the Pilot Plant relative to Purex process runs at radiation levels eight to ten times higher than those of the runs made last quarter. The radiation levels were a result of processing 60-day cooled slugs rather than 90- to 100-day cooled slugs. Assistance was given to the Pilot Plant section by analyzing process samples from decontamination studies for gross beta activity, ruthenium, zirconium, niobium, total rare earths, and iodine. The Chemical Technology Division was assisted in the Thorex process studies of the decontamination of thorium from fission products, recovery of plutonium from process samples of the Scrup program, and decontamination of stainless steel. The Health Physics Division was assisted in ecological studies of White Oak Lake and of the extent of contamination of the White Oak Dam and settling basin.

GENERAL ANALYSIS LABORATORY

J. H. Edgerton

Determination of Nitrate Nitrogen in Uranium Oxides and Uranyl Sulfate (J. H. Edgerton, J. F. Emery). The determination of the nitrate nitrogen content of uranium oxides and uranium

sulfate samples from the Harshaw Co. and the Mallinckrodt Chemical Co. and samples from Purex process products was requested by the Chemical Technology Division and K-25. The nitrate was determined by reacting it with salicylic acid[1] in a concentrated sulfuric acid solution. The nitrated salicylic acid was then reduced with sodium thiosulfate and the solution digested in the presence of a catalyst, selenium.[2] The solution was then made alkaline with NaOH and steam distilled in a semimicro Kjeldahl apparatus designed by H. L. Hemphill and modified by J. F. Emery and J. H. Edgerton. The apparatus is shown in Fig. 14. The liberated ammonia was collected in boric acid solution and titrated with standard acid.[3] Table 10 gives data for the analysis of standard solutions of KNO_3. It is believed possible to determine as little as 50 ppm of nitrate with an accuracy of ±5% by this method, which will be recorded in the ORNL Master Analytical Manual.

Ion-Exchange Separation of Calcium and Uranium (J. H. Edgerton, H. G. Davis). A request was made for the determination of calcium in the U^{235}

(1) N. H. Furman (Editor-in-Chief), *Scott's Standard Methods of Chemical Analysis*, 5th ed., Vol. 1, p. 632-3, Van Nostrand, New York, 1950.

(2) M. F. Lauro, "Use of Selenium as Catalyst in Determination of Nitrogen by Kjeldahl Method," *Anal. Chem.* **3**, 401 (1931).

(3) L. W. Einkler, "Beitrag zur titrimetrischen Bestimmung des Ammoniaks," *Z. angew. Chem.* **26**, 231 (1913).

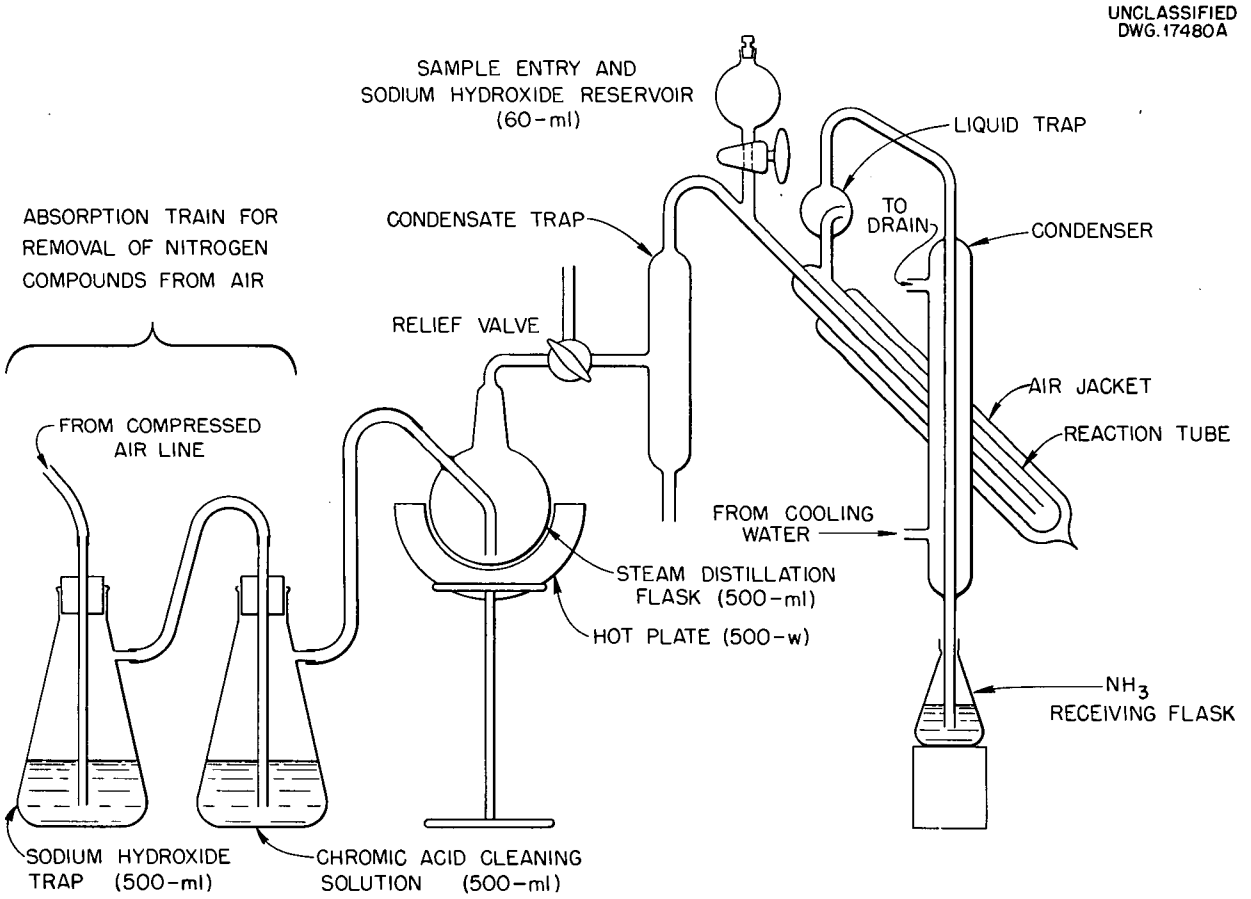

Fig. 14. Kjeldahl Distillation Apparatus for Semimicro Determination of Nitrogen.

TABLE 10. ANALYSIS OF STANDARD NITRATE SOLUTIONS* BY SEMIMICRO KJELDAHL DISTILLATION METHOD

NITRATE TAKEN (μg)	NITRATE RECOVERED (μg)	DIFFERENCE (μg)
50	51	+1
100	103	+3
200	197	-3
500	493	-7
1000	1004	+4

*Prepared from Baker & Adamson KNO_3, analytical reagent grade.

TABLE 11. ANALYSIS OF STANDARD CALCIUM SOLUTIONS* THAT CONTAINED URANIUM** BY ION-EXCHANGE SEPARATION METHOD

CALCIUM TAKEN (μg)	CALCIUM RECOVERED (μg)	DIFFERENCE (μg)
100	98	-2
200	203	+3
300	307	+7
400	401	+1
500	490	-10

*Prepared from Baker & Adamson $CaCl_2$, analytical reagent grade.

**300 mg of uranium per milliliter.

waste material from the HRP evaporators. It was necessary to separate the calcium and uranium[4] before determination of calcium with the flame photometer. This separation was effected by making the solution 8 *M* in HCl and passing it through a 200- to 400-mesh, Dowex A1, resin column, 3 by 12 cm. The uranyl ion formed a negatively charged complex with the chloride ion. The complex remained on the column and the calcium was eluted. The eluate was evaporated to dryness, the residue dissolved in water, and the solution made up to a known volume. Calcium was then determined in an aliquot of the solution with the flame photometer. Uranium was eluted from the column with 0.1 *N* HCl and determined by standard methods. Table 11 gives the calcium content of standard solutions of calcium that contained 300 mg of uranium per milliliter and that were analyzed by this method.

Observed Interference in Potentiometric Titration of Uranium by Use of the ORNL Automatic Titrator (J. H. Edgerton, L. C. Henley). It has been found that small amounts of mercury are dissolved out of the Jones reductor by the acidic chromous sulfate solution and cause high results in the uranium(IV) to uranium(VI) potentiometric titration with cerium(IV) solution.[5] The mercury was observed to amalgamate with the gold electrode. Further study of this interference is planned.

A very stable chromous solution has been prepared by the following procedure. A 10% solution of potassium chromium sulfate in distilled water is poured through a Jones reductor (1.5 by 12 cm). The chromous solution is then collected in a 5-ml medical-type syringe with the delivery end drawn to a fine capillary opening. All air bubbles must be expelled from the syringe chamber. This solution may be kept for several weeks with no noticeable decrease in its reducing power.

LABORATORY AND SEMI-WORKS CONTROL

L. T. Corbin G. R. Wilson
M. J. Gaitanis

The Thorex group of the Chemical Technology Division has requested

[4] J. H. Edgerton and H. G. Davis, "Ion-Exchange Separation of Sodium and Uranium," *Anal. Chem. Quar. Prog. Rep. Sept. 26, 1952*, ORNL-1423 (in press).

[5] R. B. Hahn and M. T. Kelley, *Potentiometric Titration of Milligram Quantities of Uranium in the Presence of Iron*, ORNL CF-51-12-183 (no date).

determinations of uranium at approximate concentrations of 5×10^{-6} mg/ml of solution that contained 60 mg of thorium per milliliter. This uranium concentration is below the sensitivity range of the fluorometric method because the uranium and thorium must be separated by a hexone extraction before the uranium can be determined fluorometrically. It was thought that by use of Dowex-A1, anion-exchange resin the thorium and the uranium could be separated and the uranium concentrated. To check this, a solution that contained a total of 475 mg of thorium and 1.25 μg of uranium in 6.5 *N* HCl was passed through a 10 mm by 4 cm column of the resin. The separation was made in triplicate, a colorimetric analysis for thorium was made on the eluates, and all the thorium was recovered to within +3%, in each case. The uranium was then eluted from the resin with 0.1 *N* HCl. This eluate was evaporated to a small volume and diluted to 10 milliliters. The solution was analyzed for uranium fluorometrically and for thorium colorimetrically. Analysis of the eluate gave an average value of 50 μg for thorium and 1.85 μg for uranium. A blank containing a total of 475 mg of thorium and presumably no uranium was passed through a similar Dowex-A1 resin column, and the eluate was found to contain 0.8 μg of uranium. Subtraction of the blank of 0.8 μg from 1.85 μg leaves 1.05 μg, a result that is within the usual accuracy of the fluorometric uranium method.

Because the uranium is held on the resin column and the thorium passes through, it should be possible to determine small amounts of thorium in the presence of large amounts of uranium. A solution containing 1 g of uranium and 25 μg of thorium in 6.5 *N* HCl was passed through a Dowex-A1 resin column, 22 mm by 4 cm, and the thorium in the eluate determined. The colorimetric results indicated that 46 μg of thorium was present. This high value may have been the result of contamination, interference in the colorimetric thorium determination by something that washes out of the resin, or possibly some thorium in the uranium. Further work is being done and will be reported later.

PILOT PLANT CONTROL

L. T. Corbin C. E. Lamb

Normal operation of the laboratory has been resumed with the startup of the second phase in the Purex program following the shutdown after the first phase of that program. However, the total number of analyses required has been reduced, as a result of the completion of the Scrup and "23" programs. To facilitate operation, 40% of the Pilot Plant Control Laboratory personnel has been transferred to the ADP Control Laboratory.

Investigation of the effect of plutonium on the fluorescence of uranium was begun at the suggestion of D. A. Orth.[6] While working on the ion-exchange coupling process, Orth found that the fluorometric uranium[7] results of the analyses of Purex products were consistently low in comparison with the polarographic uranium[8] results on solutions that contained more than 1 mg of plutonium per milliliter and less than 0.2 mg of uranium per milliliter. The study is not complete, but evidence thus far indicates that the plutonium has a quenching[9] effect on the fluorometric uranium determination by a

(6) Du Pont Co. employee.

(7) M. T. Kelley, P. F. Thomason, L. T. Corbin, S. A. Reynolds, C. L. Burros, and E. J. Frederick, "Uranium-Fluorometric Determination," *Manual of Analytical Procedures for the U^{235} Recovery Process*, Method No. 12, ORNL-983 (Aug. 20, 1951).

(8) H. H. Miller, "Polarographic Determination of Uranium in Plutonium Solutions," *Chem. Quar. Prog. Rep. March 31, 1950*, ORNL-686, p. 21.

(9) C. J. Roddin (Editor-in-Chief), *Analytical Chemistry of the Manhattan Project*, p. 122-35, McGraw-Hill, New York, 1950.

TABLE 12. SUMMARY OF ANALYTICAL SERVICE WORK AT X-10 SITE FOR THE FOURTH QUARTER OF 1952

	NO. OF PERSONNEL		ORNL DIVISIONS AND PROJECTS REQUESTING ANALYSES																			OTHERS REQUESTING ANALYSES			
	TECHNICAL	NONTECHNICAL	ANALYTICAL CHEMISTRY	ANP	BIOLOGY	CHEMICAL TECHNOLOGY	CHEMISTRY	ELECTROMAGNETIC	ENGINEERING AND MAINTENANCE	HEALTH	HEALTH PHYSICS	LABORATORY PROTECTION	MATERIALS CHEMISTRY	METALLURGY	OPERATIONS	PHYSICS	REACTOR TECHNOLOGY	SOLID STATE	REED	HRP	SCRUP ISOLATION	K-25	SPECIAL ACCOUNTS	TVA	TOTAL DETERMINATIONS
GROUP MAKING ANALYSES			Number of Determinations																						
Activation Analyses	6	5				864					98		4		24							53	556		1,599
ADP Control	4	5				199																			199
General Analyses	5	7				3,304	741		19		3			452	76	8		38		12		13			4,666
General Radiochemical	6	6	23			5,718					64													726	6,531
HRE	3	2																	573						573
Ionic Analyses	6	2				400	34								1	10									445
Isolation	1	4				2,510																			2,510
Laboratory and Semi-Works Control	2	9				11,017	22							98	57	47				47		3			11,291
Optical and Electron Microscopy	3	1			50	180	9			1				210			210								660
Pilot Plant Control	6	7				4,839	23										12								4,874
Radiochemical Analyses	5	0				130	9	371							77			1	65			8			667
Radioisotope Production Control	2	16				1,823	73								5685			96			40				7,717
Spectrochemical Analyses	5	0	7	267		381	17		2			2		58	17	10	127					25			913
TOTAL	54	64	36	267	50	31,365	928	371	21	1	165	2	4	818	5937	75	349	135	638	59	40	120	556	726	42,645

factor of approximately 5. The fluorometric procedure[7] requires the extraction of the uranium into TBP-Amsco solution in the presence of HNO_3. Some plutonium is presumably also extracted from the Purex product sample. In separate tests, ferrous sulfamate and hydroxylamine were added to the aqueous Purex product solution in an effort to reduce the plutonium(VI) and prevent it from extracting with the uranium. The hydroxylamine was not effective. However, the fluorometric uranium results obtained when ferrous sulfamate was used agreed with the polarographic results to within ±10%.

HRE ANALYSES

U. Koskela

Following the temporary breakdown of the HRE, the group has been operating with reduced personnel pending resumption of the experiment.

ISOLATION ANALYSES

L. T. Corbin J. H. Cooper

The analytical methods for the determination of uranium and plutonium in Scrup dissolver solutions have been developed. Thirty dissolver solutions were analyzed for total plutonium and uranium. R. W. Foster[10] is preparing a topical report that will include the analytical methods, precision and accuracy data, and a discussion of the various contributions to this program that have been made by members of the Analytical Chemistry Division.

An investigation and evaluation of the molybdiphosphate[11] reduction method presently used at ORNL[12] for the colorimetric determination of microquantities of phosphate in Purex process samples was recently completed by C. E. Pietri.[10] Certain refinements and additions were made in order to increase the accuracy of the procedure. A simple and safe method for converting pyro- and metaphosphates to orthophosphates was developed.[13] The new procedure is also applicable to the determination of total phosphate in aqueous Purex process solutions with acceptable precision and accuracy.

Considerable difficulty has been encountered by the Purex control laboratories because of the high beta and gamma radiation present on alpha mounts prepared for counting. This high radiation, 2 to 20 r/hr, not only offers a severe hazard to personnel, but causes the alpha proportional counters to give very erratic and high plutonium results. D. Madinabeitia[10] has developed a solvent-extraction method for the removal of zirconium and niobium from plutonium during the analysis of Purex process waste samples. Because zirconium and niobium are extracted along with plutonium by TTA, it was necessary to incorporate a zirconium-niobium cleanup step in the standard TTA plutonium method.[14] Details of the procedure will be recorded in the Purex Control Manual.

(10) Du Pont Co. employee.

(11) H. H. Willard and H. Diehl, *Advanced Quantitative Analysis*, p. 196, Van Nostrand, New York, 1943.

(12) Private files of P. F. Thomason, ORNL Analytical Chemistry Division.

(13) F. P. Treadwell and W. T. Hall, *Analytical Chemistry*, 9th ed., Vol. 1, p. 390-9, Wiley, New York, 1939.

(14) "Total Plutonium in Aqueous Solutions - TTA Method," *Purex Control Manual* (Revision of KAPL Procedure Manual No. 348).

ANALYTICAL CHEMISTRY DIVISION— Y-12 SITE

RESEARCH AND DEVELOPMENT

ANALYTICAL STUDIES OF REACTOR FUELS AND THEIR COMPONENTS

J. C. White J. E. Lee, Jr.
C. M. Boyd W. J. Ross
C. K. Talbott

The development of methods for the analysis of reactor fuels and their components has been of a diversified nature during the past period. The major problem was to develop a volumetric method for the determination of zirconium. Other problems that have been studied include the colorimetric determination of chromium, the determination of oxygen in metallic oxides, the separation and determination of traces of aluminum in reactor fuels, the determination of water in materials proposed for use in reactor fuels, the design of an apparatus for measuring the conductivity of hydrofluoric acid in order to determine its water content, the identification of the products that are produced by the reaction of NaK with components of reactor fuels, and the adaptation of a method for determining uranium dioxide in uranyl trifluoride. Discussion of the work done on these problems is included in an ANP quarterly progress report.[1]

ANALYTICAL STUDIES FOR THE RAW MATERIALS PROGRAM

J. C. White

Analytical studies for the Raw Materials project have included the development of an indirect method for determining uranium in Bartow clays and in organophosphorus-kerosene extracts, evaluation of partition chromotography for separating uranium in raw materials, microdetermination of carbon and hydrogen in organophosphorus compounds, application of titrations in nonaqueous solvents to the determination of high-molecular-weight amines, fluorometric determination of uranium with the model Q-1165 fluorometer, and the determination of milligram amounts of amines by the Kjeldahl procedure. The progress of these studies is discussed below.

Indirect Ferrous-*o*-Phenanthroline Colorimetric Determination of Uranium (D. L. Manning). Further experiments have been conducted on the indirect ferrous-*o*-phenanthroline colorimetric method for uranium that was outlined in a previous report.[2] In order for the method to be applied successfully to samples that contain uranium, an efficient separation of the uranium from iron and phosphate must be achieved because any iron that is present in the solution during the step in which uranium(VI) is reduced to uranium(IV) will also be reduced, and the results will be in error. An appreciable amount of phosphate should be avoided because uranium(IV) is precipitated by phosphate.

An ion-exchange separation procedure was tested in which uranium was retained as the complex sulfate on a strong-base, anion-exchange resin and eluted with HCl solution. The test results indicated that the uranium was not completely retained on the resin.

A double extraction of uranium from a 10% HNO_3 solution with tributyl phosphate (TBP) by use of $Al(NO_3)_3$ as a salting-out and phosphate-complexing reagent has proved to be a satisfactory

(1) J. C. White *et al.*, "Chemical Analysis of Reactor Fuels," *ANP Quar. Prog. Rep. Dec. 10, 1952*, ORNL-1439, p. 190.

(2) W. K. Miller, D. L. Manning, and J. J. McCown, "Determination of Uranium in Bartow Clays," *Anal. Chem. Quar. Prog. Rep. Sept. 26, 1952*, ORNL-1423 (in press).

method for separating uranium from low-grade ores. The TBP phase is stripped with 1 *N* $(NH_4)_2CO_3$ solution to remove uranium as the uranyl tricarbonate ion and to hydrolyze any iron and aluminum extracted. The aqueous phase is evaporated to a small volume, taken to dryness with H_2SO_4, and the residue dissolved in 1 *N* H_2SO_4. The uranium(VI) in the solution is reduced to uranium(IV) at a mercury cathode and determined colorimetrically with ferrous-*o*-phenanthroline.

Initial tests of zinc and cadmium microreductors, 0.5 by 8 to 12 cm, made by use of standard uranyl solutions, showed that either of the microreductors is satisfactory for effecting the reduction of uranium(VI) to uranium(IV). It was necessary to use suction to assure an even rate of solution flow through the reductors. Further tests with these reductors on synthetic Bartow clay samples that contained known amounts of uranium(VI) and that had been extracted with TBP yielded erratic results. It is believed that this was caused, in part, by traces of iron in the final spectrophotometric volume of solution being present in spite of the steps taken to effect its removal. This belief was verified by applying the TBP extraction procedure to synthetic samples that contained no uranium. Appreciable blanks were obtained in each case. Reduction of the last traces of iron by means of the mercury cathode eliminated the blanks. Although initial tests with this reduction method gave erratic results, it was found that increasing the volume of solution taken for electrolysis and immersing only a minimum portion of the platinum anode in the solution gave reproducible results. Partial immersion of the anode was necessary to minimize anodic oxidation. Experiments are planned with isolated cell compartments in an effort to eliminate anodic oxidation. The use of cadmium[3] as an anode has also been suggested for this purpose.

This procedure was applied to standard solutions in the concentration range of 50 to 400 μg of uranium per 50 ml of final volume and gave a colorimetric factor of 14.7 μg of uranium per milliliter per optical density unit (unit cell length) with a standard deviation of 10%. Use of the procedure for analyzing synthetic Bartow clay samples that contained uranium in the same concentration range and that had been carried through the TBP separation procedure, gave the same colorimetric factor with a standard deviation of 13%. The method was also applied to organophosphorus-kerosene extracts that contained uranium; the standard deviation for duplicates was 6%. Further evaluation of the method is now in progress.

Separation of Uranium by Partition Chromatography (J. J. McCown). The separation of uranium by means of of cellulose in column or strip form has been discussed previously.[4] Results of these investigations were not entirely satisfactory. A partition chromatographic technique suggested by W. J. Frierson[5] that employed the apparatus shown in Fig. 15 was tested on synthetic Bartow clay solutions.

Two glass plates, 5 by 6 in., were coated on one side with Desiccote to render them water-repellent. Two strips of Eaton-Dykeman, 320 grade, 1/8 in.-thick cellulose (2 by 6.5 in.) were placed between the plates so that they touched the coated sides. The strips were notched twice at the top and cut to a point that protruded approximately 0.5 in. below the glass-plate holder. A dropping funnel was

(3) H. H. Willard, private communication to J. C. White, Dec. 3, 1952.

(4) W. K. Miller, D. L. Manning, and J. J. McCown, "Determination of Uranium in Bartow Clays," *Anal. Chem. Quar. Prog. Rep. Sept. 26, 1952*, ORNL-1423 (in press).

(5) Summer research participant from Agnes Scott College, Decatur, Ga.

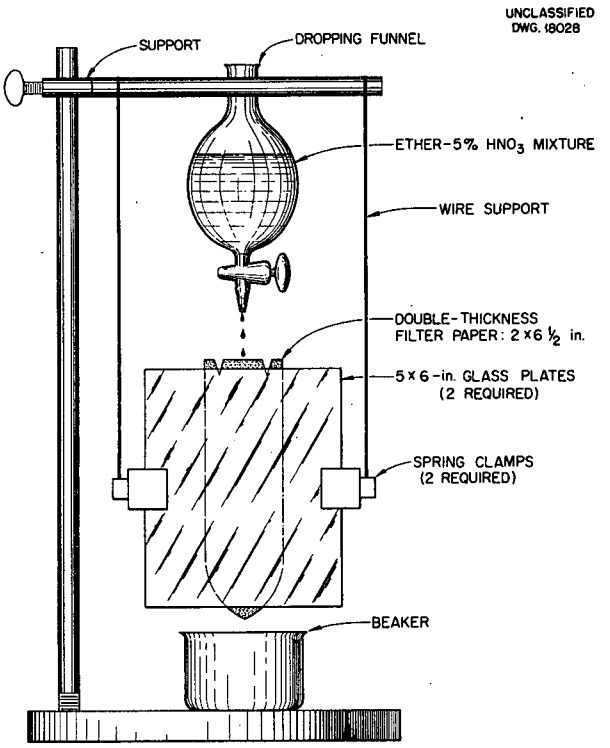

Fig. 15. Apparatus for Cellulose-Strip Separation of Uranium.

used to dispense the eluting solvent, and a beaker placed beneath the paper strips was used to catch the eluate.

A HNO_3 solution of the clay was placed in the V-shaped pockets, and the uranium was eluted rapidly with 200 ml of a solution of HNO_3 in ether (5 wt vol %). The eluate was evaporated to dryness and the organic material destroyed by oxidation with a HNO_3-$HClO_4$ mixture. The final determination of uranium was made by the *l*-ascorbic acid colorimetric method.[6]

Several factors were found to be critical. The flow of eluting solvent had to be regulated at a rapid but constant rate. Slight deviations in flow rate produced erratic results. Evaporation of the ether-HNO_3 eluate on a steam bath resulted in unexplained explosions. These explosions were prevented by evaporating the eluate under infrared lamps. Frequent recoating of the glass plates with Desiccote was also necessary to ensure uniform wetting of the cellulose strips. Phosphate ion was eluted under these conditions, an interference that was eliminated by adding excess iron(III) to the uranium solution to form the immobile iron phosphate complex.

Studies of the separation of uranium from synthetic Bartow clay solutions showed that this method was entirely satisfactory. However, application of the procedure to other phosphatic-base materials indicated that it was empirical and largely dependent upon the nature and concentration of constituents in the original material. It does not appear possible to apply the same conditions for the separation of uranium to all types of phosphatic raw materials. A specific procedure for the determination of uranium in Bartow clays is being prepared.

Microdetermination of Carbon and Hydrogen in Organophosphorus Compounds (W. J. Ross, D. L. Manning). The Raw Materials group of the Materials Chemistry Division is preparing a large number of new organophosphorus compounds of the phosphinic and phosphonic acid families. These compounds are extremely stable and have boiling points of the order of 200°C at a pressure of 1 μ Hg. A microfurnace has been set up for the determination, by combustion, of carbon and hydrogen in these compounds. Because of their great thermal stability, it is necessary to ignite the samples at 900°C in order to completely convert the carbon to carbon dioxide. Special techniques have been employed to prevent flashing during combustion. The standard deviation of the method for duplicate determinations of carbon and hydrogen on 16 samples was found to be 2.2% for carbon and 1.0% for hydrogen.

Titration of Amines in Nonaqueous Solvents (W. J. Ross). The titration of amines in nonaqueous solvents has

[6] C. D. Rothenberger and W. R. Grimes, *Use of l-Ascorbic Acid as a Colorimetric Reagent for Uranium*, H-4.360.13 (June 9, 1947).

been evaluated for determining purity and concentration of amines in organic and aqueous solvents. The work of Fritz[7] has been used as a guide.

Studies have been limited to the high-molecular-weight primary, secondary, and tertiary amines that are being considered as possible extractants for uranium. These amines were dissolved in glacial acetic acid and titrated with 0.01 *N* $HClO_4$ in glacial acetic acid. Special precautions were taken to avoid absorption of water. Both colorimetric and potentiometric methods have been used to determine the end point. Crystal violet appeared to be satisfactory as an indicator except at low concentrations of amines, where potentiometric end-point detection by means of the glass electrode-calomel electrode system was required. The end-point break was of the order of 100 mv for as little as 5 mg of amine in 50 ml of solution (approximately 0.0005 *M*). Results of the titrations of various amines are shown in Table 13.

At the present time, the purities of only di-*n*-heptylamine and di-2-ethylhexylamine have been established. The remaining amines listed were commercial grade, and no further purification had been attempted before titration. The method is indicated to be inherently sensitive, usable over a wide concentration range, and of good accuracy and precision. The standard deviation of the method for a range of 3 to 118 mg of amine was 0.4 milligram. The feasibility of determining traces of amines in aqueous solution by this method, after removing the water by evaporation on a steam bath, is being investigated.

(7) J. S. Fritz, *Acid-Base Titrations in Nonaqueous Solvents*, The G. Frederick Smith Chemical Co., Columbus, Ohio, 1952.

TABLE 13. TITRATION OF HIGH-MOLECULAR-WEIGHT AMINES IN GLACIAL ACETIC ACID WITH 0.01 *N* PERCHLORIC ACID

AMINE	MILLIGRAMS OF AMINE		
	Taken	Found	Difference
Di-*n*-heptylamine	111.6	111.6	0.0
	117.4	118.0	-0.6
	41.0	40.8	0.2
	18.9	18.4	0.5
	2.5	2.7	-0.2
Di-2-ethylhexylamine	240.5	240.0	0.5
	235.7	236.4	-0.7
	235.7	235.2	0.5
3,5,5-Trimethylhexylamine*	146.1	125.3	20.8
	132.3	117.4	14.9
	184.0	163.1	20.9
	184.6	164.5	20.1
Di-*n*-octylmethylamine*	251.9	229.8	22.1
	271.1	247.6	23.5
Didecylmethylamine*	359.7	367.0	-7.3
	349.6	356.1	-6.5

*Purity unknown.

Fluorometric Determination of Uranium (J. E. Lee, Jr.). Some difficulty has been encountered in the use of the ORNL model Q-1165 fluorometer for the determination of uranium. Previous work indicated that the relationship between the concentrations of uranium and the millivolt readings of the instrument was linear over the concentration range of 0 to 100 μg of uranium per milliliter of test solution. At present, this particular behavior is shown only in the range of 15 to 60 μg of uranium per milliliter. Low readings were obtained above this concentration range and erratic results below it. Meker burners have been substituted for air-blast burners in an effort to maintain a more uniform fluxing temperature. A critical survey of the entire procedure is currently under way.

Kjeldahl Determination of Milligram Amounts of Amines (H. Grady). Studies have been made to ascertain the cause of the low results usually obtained by the Kjeldahl procedure for the determination of milligram amounts of high-molecular-weight amines. Conditions for the digestion were established, that is, a digestion temperature of 350 to 400°C and mercury as the catalyst. The well-known use of boric acid[8] to trap liberated ammonia and permit the direct titration with standard acid was also incorporated in the procedure. Preliminary results obtained with the revised procedure indicated some improvement. The standard deviation was approximately 6%. Control samples will be used to determine whether a true bias exists. It is planned to investigate the Nessler colorimetric method for the determination of amounts of amines equivalent to less than 1 mg of nitrogen.

(8) N. H. Furman (Editor-in-chief), *Scott's Standard Methods of Chemical Analysis*, 5th ed., Vol. 1, p. 633, Van Nostrand, New York, 1946.

ANALYTICAL STUDIES FOR THE HOMOGENEOUS REACTOR PROGRAM

O. Menis

The analysis of uranyl sulfate, uranyl fluoride, and uranyl oxide solutions and solids that are used as fuels in the HRP required the following studies: potentiometric titration of uranium(VI) in the presence of metallic corrosion products; determination of uranium-to-sulfate and uranium-to-fluoride ratios in uranyl solutions, uranium(IV) in UO_3, microgram quantities of fluoride and zirconium in uranyl solutions, and microgram quantities of nitrate in UO_3; and the adaptation of the Beckman photomultiplier tube attachment to spectrophotometric analyses. The progress of these investigations is discussed below.

Potentiometric Determination of Uranium(VI) (T. R. Phillips). In the HRP long-duration corrosion studies, it is necessary to conserve the test solution by limiting the sample size to be used for analyses. Therefore a procedure is being studied for the determination on a single sample of uranium(IV), iron(III), chromium(VI), and other corrosion products from the stainless steel systems. The procedure being used is automatic potentiometric titration with chromous sulfate.

The general procedure, accuracy, and precision of the chromous titration for uranium(VI) have been reported previously.[9,10,11] However, it is desired to know the precision of the determination for 1 to 15 mg quantities of uranium in the presence of traces

(9) R. H. Lafferty, Jr. and R. Winget, Jr., *The Determination of Uranyl Ion by Direct Titration with Chromous Sulfate*, A-4018 (April 1, 1946).

(10) O. Menis and C. K. Talbott, "Determination of Uranium by Direct Titration with Chromous Solution," *Anal. Chem. Quar. Prog. Rep. Dec. 26, 1951*, ORNL-1233, p. 73.

(11) O. Menis and F. E. Jenkins, "Determination of Uranium by Direct Titration with Chromous Sulfate," *Anal. Chem. Quar. Prog. Rep. March 26, 1952*, ORNL-1276, p. 79.

of iron(III) and chromium(VI). Complexing agents, such as the thiocyanate ion and Versene, are being added to increase the potential change at the equivalence point for better estimation of the end point, and temperature effects and electrode conditions are being investigated. The stability of the standard chromous solution over a long period of time is also being checked.

Uranyl solutions that did and did not contain corrosion products were titrated with a high degree of precision after the proper conditions were established. The range of standard deviations of the method, for a series of solutions that contained 1.5 to 15 mg of uranium, was 1 to 0.4%.

In the presence of 40 to 500 μg of iron(III), the potential break was found to be sharp when NH_4CNS was used as the complexing agent, and the precision of the uranium determination was of the same order of magnitude as in the absence of iron.

A study of the uranium results obtained in the presence of chromate ions in the range of 50 to 250 μg of chromium(VI) indicated improved precision when the temperature was raised from 80 to 95°C or when Versene was added. For a concentration of 200 mg of Versene per milliliter, the curve was reproducible. For higher concentrations of Versene, the height of the chromium curve gradually decreased. Under those conditions, the end points were easier to determine because of the steeper slope of the titration curve at the inflection point. The standard deviation of the determination of 1.5 mg of uranium is of the order of 1%. It was noted that at low concentrations of uranium an increase in the potential change occurs at the end point when the electrode is cleaned with HNO_3 and flamed before each titration. The 0.05 *N* $CrSO_4$ solution in 0.25 *M* H_2SO_4 showed only a 2% change from the initial titer value over a period of 25 days. The critical quantities of complexing agents and the degree of control of other variables that will be required for the estimation of microgram quantities of the trace elements in the corrosive test solution are to be determined.

Determination of Uranium-to-Sulfate and Uranium-to-Fluoride Ratios (T. R. Phillips). The ion-exchange method described by Day, Gill, Jones, and Marshall[12] is rapid and reliable for determining fluoride or sulfate in uranyl solutions. The method employs the selective adsorption of uranyl ions on a 1- by 4-in. column of cation-exchange resin (Dowex-50, 12% cross linked, 200 to 400 mesh) followed by titration of the hydrofluoric or sulfuric acid in the eluate from the exchange column.

This method for the determination of sulfate has been used for low concentrations; earlier work on higher concentrations was reported by the Analytical Service Laboratory.[13] For the lower concentrations, ranging from 4 to 11 mg, the standard deviation was 3%.

Determination of Uranium(IV) in Uranyl Oxide (M. L. Druschel). A simple, direct, preferably colorimetric procedure is needed for the determination of microgram quantities of uranium(IV) in the presence of milligram quantities of uranium(VI) in slurries of UO_3. Indirect methods were used but were not satisfactory because of the numerous steps and precautions required. The separation of uranium(IV) as UF_4 by means of fluoride ions in the presence of lanthanum as a carrier has been discussed.[14] The thiocyanate method

(12) H. O. Day, J. S. Gill, E. V. Jones, and W. L. Marshall, *A Search for a Reliable Sulfate Analysis of Uranyl Sulfate; the Ion Exchange Method*, ORNL CF-52-2-50 (Feb. 7, 1952).

(13) A. F. Roemer, Jr., "Analytical Services for the HRP," *Anal. Chem. Quar. Prog. Rep. June 26, 1952*, ORNL-1361, p. 60.

(14) O. Menis, C. K. Talbott, and F. E. Jenkins, "Analysis of Uranyl Sulfate Solutions," *Anal. Chem. Quar. Prog. Rep. June 26, 1951*, ORNL-1113, p. 73.

was used for the final uranium determination after the oxidation of uranium(IV) to uranium(VI).

A perchloric acid solution of uranium(IV) was observed to give a rather high absorbancy with chloranilic acid, and it was thought that this reaction could be made the basis for a simple colorimetric procedure. When the study was first initiated, difficulty was encountered in the preparation of a stable uranium(IV) stock solution with a concentration of approximately 500 μg of uranium per milliliter. The procedure found most satisfactory was to prepare uranium(IV) from a standardized perchloric acid solution of UO_3 by the Jones reductor method. An aliquot of the stock uranium(IV) perchloric acid solution was diluted in iced, oxygen-free water to give a standard solution of 500 μg of uranium(IV) per milliliter. This dilute solution, when kept iced, was found to be stable for at least 1.5 hours. The UO_3 was analyzed by placing the solid UO_3 sample and an aliquot of the standard uranium(IV) solution in a 50-ml volumetric flask, adding 20 ml of a 2.6×10^{-3} *M* chloranilic acid solution and 15 ml of concentrated $HClO_4$, and agitating the mixture until all the UO_3 went into solution. The solution was then brought approximately to volume, cooled, and diluted to the desired volume with water. The optical density was determined after a color-development period of about 20 minutes. A reference solution of equivalent uranium(VI) concentration that contained all the reagents was used. In this determination, the absorbancy may be measured at 333 mμ, the wavelength at which the maximum absorbancy occurs. However, if large concentrations of uranium(IV) are present (20 to 50 μg/ml), the 340-mμ wavelength may be used, a condition under which there is also less absorption by the reagent. Uranium(IV) may be determined in the concentration range of 2.5 to 50 μg of uranium per milliliter of spectrophotometric volume with a precision of less than 5% in the presence of as much as 150 mg of UO_3. There are several factors yet to be investigated, for example, conditions favorable to greater stability of the complex at a uranium(IV) concentration of less than 5 μg of uranium per milliliter of spectrophotometric volume. Under the present test conditions and at the concentration range used, the complex remains stable in the volumetric flask for over 20 min; however, its absorbancy changes rapidly after 1 min when the solution is transferred to a cuvette. Also, the limit of the concentration of UO_3 above which Beer's law is no longer obeyed is to be determined.

Determination of Microgram Quantities of Fluoride in Uranyl Solutions (M. L. Druschel). A sensitive and precise colorimetric procedure for the determination of microgram quantities of fluoride in uranyl sulfate solutions was desired. The method of Revinson and Harley,[15] which is based on the measurement of the fading of a Chrome Azurol S–thorium lake in the presence of microgram quantities of fluoride, was adopted. Interfering ions, such as iron, aluminum, uranium, tin, titanium, beryllium, zirconium, sulfates, and phosphates, are removed by a modified Willard and Winter[16] distillation prior to the colorimetric fluoride determination.

The Chrome Azurol S dye is prepared as 0.04% aqueous solution with thymol and gum arabic added as stabilizers. If the solution is allowed to stand for two to three weeks and is then filtered and stored in a dark bottle, the analytical factor[17] for fluoride

(15) D. Revinson and J. H. Harley, *Spectrophotometric Determination of Fluoride Ion with Chrome Azurol S*, Analytical Branch, Health and Safety Division, New York Operations Office, U. S. Atomic Energy Commission (no date or document number).

(16) H. H. Willard and O. B. Winter, "Volumetric Method for Determination of Fluorine," *Ind. Eng. Chem., Anal. Ed.* 5, 7 (1933).

(17) Milligrams of F per milliliter of spectrophotometric volume, divided by optical density unit for 1-cm cell length.

will not vary from day to day. Thorium nitrate solution, 0.00018 *M*, is prepared in 0.001 *M* perchloric acid to prevent adsorption of the thorium on glass. A buffer of pH 4 is prepared from perchloric acid, *o*-toluidine, and water. Redistilled water is used for all reagent preparation and as the reference blank. All spectrophotometric measurements are made at 605 mμ.

The conditions and results of this method differ somewhat from those originally reported.[15] A color development period of only 1 hr was required, compared with the 2-hr period specified in the original procedure. The color was stable for another 3 hours. A precision of 3 to 7% was achieved – a slight improvement over the 10% reported. A twofold increase in sensitivity over that reported was obtained, that is, a fluoride analytical factor of 1.65; Revinson and Harley reported 3.52. These improved results may be partly explained by the quality of the Chrome Azurol S received from Geigy.[18]

Determination of Microgram Quantities of Zirconium in Uranyl Solutions (S. K. Gross). The study of the chloranilic acid method[19] for the determination of zirconium in uranyl solutions was continued. This method requires the use of a Beckman spectrophotometer equipped with the photomultiplier attachment described below. The factors studied were the interference of sulfate ions associated with uranyl ions, the effect of increase of perchloric acid concentration on the reduction of interferences, and the elimination of fluoride ion interference. Also, a uranyl fluoride sample was analyzed for zirconium.

As was described in the previous report,[19] the presence of uranyl sulfate decreases the sensitivity of the method. To determine whether the uranyl or the sulfate ions cause this decrease, separate tests were carried out in the presence of uranyl ions (from UO_3) and of sulfate ions. The effect of increased perchloric acid concentration on this interference was also examined. The presence of as much as 12.6×10^{-3} moles per milliliter of sulfate solution, equivalent to 3 mg of uranium in UO_2SO_4, does not lower the sensitivity. However, higher concentrations cause a proportional lowering of sensitivity. Uranyl ions in concentrations up to 3 mg of uranium(VI) per milliliter in perchloric acid solution do not change the factor, but in the concentration range from 3 to 5 mg of uranium(VI) per milliliter, a slight reduction in sensitivity is noted. Thus it was found that both ions tend to decrease the sensitivity of the method. A further study of the uranyl sulfate interference in which the molarity of perchloric acid was increased from 2.9 to 3.5 brought about an approximately twofold reduction in sensitivity; but in the range 0 to 5 mg of uranium per milliliter, the deviation in the value of the factor did not exceed the standard deviation of the method, indicating that under those conditions a single factor could be used for the uranium concentration range below 5 mg of uranium per milliliter.

A study of the reduction of the interference of iron(III) with increasing $HClO_4$ concentration showed that as the molarity of the acid was increased from 2 to 3.5 *M* in increments of 0.5 *M*, the interference was reduced from 20 to 4% of the zirconium absorbancy. Increase in the $HClO_4$ molarity to 4.0 gave no further decrease in iron interference. However, the analytical factor for zirconium also decreased with increasing $HClO_4$ concentration. For 2, 3, and 4.0 *M* $HClO_4$, the factors were 3.5, 7.3, and 9.0, respectively.

(18) Geigy Company, Inc., 89-91 Barklay St., New York, N. Y.

(19) O. Menis, "Analysis of Uranyl Sulfate and Uranium Oxide," *Anal. Chem. Quar. Prog. Rep. Sept. 26, 1952*, ORNL-1423 (in press).

Determination of Traces of Nitrate in Uranyl Oxide (S. A. Ross). The method described in a previous report[19] for the determination of traces of nitrate in UO_3 by the use of phenoldisulfonic acid was abandoned because the absorbancy of the blank was high and difficult to reproduce. A method employing chromous reduction of the nitrate to ammonia and Kjeldahl distillation of the ammonia[20] is presently being considered.

Additions to the Photomultiplier Tube Attachment for the Beckman Spectrophotometer (O. Menis). Recently Beckman Instruments, Inc. has made available a photomultiplier attachment[21] that greatly enhances the sensitivity of spectrophotometric instruments. Three additions to the attachment have been made to permit its use with the Beckman model DU spectrophotometer, that is, a voltage tap switch, an additional load resistor, and a filter adapter for the tungsten lamp housing.

The attachment as supplied is equipped with a closed battery box that houses a series of dry batteries that produce 630 volts. In order to adjust the sensitivity of the phototube, opening of the high voltage box and disconnection of some of the leads are required. The voltage tap switch that was added permits control of the voltage in steps of 45 volts, thereby providing sensitivity control at a constant slit width. Batteries were also added to permit increase of the total voltage by 135 volts if still higher sensitivity is desired.

An additional phototube load resistor (20 megohms in parallel with a 0.01-μf capacitor) was installed to control the fluctuation of the galvanometer needle and to facilitate instrument reading.

One of the most important features of the additions to the attachment is the filter adapter in front of the tungsten-lamp light source. By use of filters that absorb scattered light of the wavelengths above that measured, closer adherence to Beer's law has been attained. The analytical factor for solutions of potassium dichromate (50 to 100 μg of $K_2Cr_2O_7$), which is known to conform to Beer's law when measured at 353 mμ, was 42.9 μg of $K_2Cr_2O_7$/ml/optical density unit with a standard deviation of 16%. The factor for the same solution when measured by the use of a Corning filter No. 5970 was 31.7 with a standard deviation of 1%. This improvement in standard deviation is an indication of the improved linearity of absorbancy as a function of concentration that is achieved by use of the filter. Similarly, the analytical factor for uranyl sulfate solutions in the concentration range of 10 to 50 mg of uranium per milliliter and measured at 418 mμ by the use of a Corning No. 5113 filter, was 17.8 (mg/ml/optical density unit) with a standard deviation of 0.3%.

QUALITY CONTROL

R. L. McCutchen

The control programs for both the General Analytical Laboratory and the ANP Analytical Laboratory have been revised and expanded during this period. Daily control standards and regular process determinations have been used to maintain the accuracy and precision of the reported test results. Youden's method of control was continued in the HRP analytical laboratories. The control programs for the analytical laboratories at the X-10 site remained unchanged during this quarter.

During this period 10,208 determinations for control purposes were reported by the five laboratories participating in the control program

(20) O. Menis and C. K. Talbott, "Determination of Trace Elements," *Anal. Chem. Quar. Prog. Rep. Dec. 26, 1951*, ORNL-1233, p. 76.

(21) Beckman Instruments, Inc., South Pasadena, Cal., Bulletin 282.

as compared with 2778 reported for the previous quarter. The distribution of the 10,208 determinations, according to laboratories, is shown in Table 14.

General Analytical Chemistry Laboratory. During the past quarter the use of daily correction factors was continued, and the correction factor limits for several determinations were revised (Table 20). In addition to the control standards, 57 types of analyses for various process samples were evaluated for control purposes. The use of process samples for control purposes has at least two advantages over the use of regular control standards: (1) It is not necessary to make additional determinations because the regular test results can be used for control purposes. Thus the cost of processing samples for control purposes only is eliminated. (2) It is difficult to simulate the composition of the various process samples; therefore the standard samples may not be comparable to the process samples. This source of error is eliminated when regular process samples are used for control purposes. It is anticipated that the use of control standards can be kept to a minimum by substituting process samples wherever possible in the control program. The tentative control limits and correction factor limits for the General Laboratory are given in Tables 15, 16, 17, 18, 19, and 20.

HRP Analytical Chemistry Laboratory. The use of Youden's method for maintaining the accuracy and precision of the reported sample values was continued during this period with the result that the precision in all cases either improved or remained essentially the same as was observed for last quarter.

Erratic results for nickel were observed during the early part of this period but were minimized by the use of daily control standards during the remainder of the quarter. At the present time, daily control standards and Youden's method of control are both being used to maintain the accuracy and precision of the nickel test results. It is anticipated that the daily control standards for nickel will be withdrawn before the end of the next quarter.

A summary of the control results for this period is given in Table 21.

ANP Analytical Laboratory. Analyses of the solid eutectic control materials were eliminated from the control

TABLE 14. SUMMARY OF CONTROL DETERMINATIONS

ANALYTICAL LABORATORY	NUMBER OF DETERMINATIONS		TOTAL DETERMINATIONS
	Control	Process*	
Y-12 Site			
General	365	7412	7,777
HRP	120	813	933
ANP	382		382
X-10 Site			
Building 4500	496		496
Building 3019	620		620
Total	1983	8225	10,208

*Used for control purposes.

TABLE 15. TENTATIVE CONTROL LIMITS BASED ON THE DIFFERENCE BETWEEN DUPLICATE DETERMINATIONS BY GRAVIMETRIC METHODS

Weight of Final Precipitate: 100 mg

DETERMINATION	NUMBER OF DUPLICATES	STANDARD DEVIATION (%)	CONTROL LIMITS (Limit of error, %)*
Fe	4	4	10
Ni	31	0.8	1.5
Al	2	1.0	2.0
Zr	2	7.0	15
Mg	71	1.5	3.0
Mg**	16	15	30
Li	30	1.5	3.0
Cb	7	2.0	4.0
Nb	11	4.0	10
Si	33	1.5	3.0
Br	6	0.7	1.5
SO_4^{--}	97	2.0	4.0
PO_4^{---}	45	0.5	1.0
ClO_4^-	2	0.5	1.0
Loss on Ignition	29	1.3	2.5

*95% probability level.

**Less than 100 mg of final precipitate.

TABLE 16. TENTATIVE CONTROL LIMITS BASED ON THE DIFFERENCE BETWEEN DUPLICATE DETERMINATIONS BY VOLUMETRIC METHODS

DETERMINATION	NUMBER OF DUPLICATES	VOLUME OF TITRANT (ml)	STANDARD DEVIATION (%)	CONTROL LIMITS (Limit of error, %)*
Fe	53	>5	2.8	5.0
Ca	46	>5	1.5	3.0
Al	65	>5	1.8	3.0
Mg	11	>5	0.5	1.0
Mn	33	>5	1.5	3.0
Cr	24	~10	0.8	1.5
V	4	5 to 10	2.0	5.0
NH_3	9	~10	2.5	5.0
Cl	379	>2	1.6	3.0
Br	4	>2	1.0	2.0
Alkalinity	153	10 to 15	0.5	1.0
PDA	2	>5	0.7	1.5
U**	25	15 to 25	0.3	0.5
U***	12	~4	1.2	2.5

*95% probability level

**Jones reductor-ceric sulfate method.

***Potentiometric titration-chromus-ferric method.

TABLE 17. TENTATIVE CONTROL LIMITS BASED ON THE DIFFERENCE BETWEEN DUPLICATE DETERMINATIONS BY COLORIMETRIC AND FLAME PHOTOMETRIC METHODS

DETERMINATION	METHOD	NUMBER OF DUPLICATES	OPTICAL DENSITY	TRANSMITTANCY (%)	STANDARD DEVIATION (%)	CONTROL LIMITS (Limit of error, %)*
			Colorimetric			
Fe	α,α'-Bipyridyl	112	>0.1		5.0	10
	Salicylic acid	124	>0.1		4.0	10
Al	Aluminon	89	>0.1		3.0	5
Cr	Diphenylcarbazide	2	>0.1		1.0	2
Ni	Dimethylglyoxime	2	>0.1		2.5	5
V	Peroxide	27	>0.1		2.0	5
Mo	Molybdenum blue	179	>0.1		2.5	5
PO_4^{---}	Mixed vanadate	419	>0.1		2.0	4
			Flame Photometric			
K		14		15 to 65	0.6	1.5
Na		740		15 to 65	0.7	1.5
Li		1270		15 to 65	0.4	1.0

*95% probability level.

TABLE 18. TENTATIVE CONTROL LIMITS BASED ON DIFFERENCES BETWEEN DUPLICATE URANIUM DETERMINATIONS BY FLUOROMETRIC METHOD

Uranium Concentration: 1 to 5 μg/ml

MATERIAL ANALYZED	NUMBER OF DUPLICATES	STANDARD DEVIATION (%)	CONTROL LIMITS (Limit of error, %)*
Leach solutions			
HNO_3	121	13	25
Organic	47	10	20
H_2SO_4	46	7	15
$HClO_4$	68	12	25
HCl	3	18	35
Raffinates			
Aqueous	9	11	20
$HClO_4$-H_3PO_4	54	13	25
Lignite			
Leach	8	6	10
Tailings	7	7	15
Residues**	31	10	20

*95% probability level.

**Concentration: 1 to 5 μg/g.

TABLE 19. TENTATIVE CONTROL LIMITS BASED ON DIFFERENCES BETWEEN DUPLICATE URANIUM DETERMINATIONS BY *l*-ASCORBIC ACID COLORIMETRIC METHOD

Optical Density: > 0.1

SOLUTION	NUMBER OF DUPLICATES	STANDARD DEVIATION (%)	CONTROL LIMITS (Limit of error, %)*
Leach solution			
Organic	277	4	10
$HClO_4$	28	2.3	5
HCl	16	1.7	3
Stripping solution			
Aqueous	29	4.2	10
Na_2CO_3	8	2.8	5
H_3PO_4	6	3.8	10
Lignite leach	2	3.0	5

*95% probability level.

TABLE 20. REVISED CONTROL LIMITS AND CORRECTION FACTOR LIMITS BASED ON CONTROL STANDARDS

DETERMINATION	METHOD	NUMBER OF DUPLICATES	MAGNITUDE OF QUANTITY MEASURED	STANDARD DEVIATION (%)	CONTROL LIMITS (Limit of error, %)*	CORRECTION FACTOR LIMITS (%)
U	Fluorometric (new)	12	0.010 to 0.060 μg	4.5	10	0.90 to 1.10
	Fluorometric (old)	25	1 to 5 μg/ml	3.2	5	0.90 to 1.10
	l-Ascorbic acid	19	O.D. > 0.1**	2.0	5	0.95 to 1.05
Fe	α,α′-Bipyridyl	33	O.D. > 0.1	2.5	5	0.95 to 1.05
	Salicylic	10	O.D. > 0.1	2.2	5	0.95 to 1.05
	Volumetric	10	> 5 ml	1.5	3	0.98 to 1.02
Al	Aluminon	31	O.D. > 0.1	5.0	10	0.80 to 1.10
V	Peroxide	7	O.D. > 0.1	1.5	3	0.95 to 1.05
Mo	Molybdenum blue	31	O.D. > 0.1	3	5	0.95 to 1.05
Ca	Volumetric	6	~15 ml	1.5	3	0.95 to 1.05

*95% probability level.

**O.D. = optical density.

program as a result of the study reported last quarter.[22] Consequently, standard-control solutions were used exclusively to maintain the accuracy and precision of reported sample values.

During this period, it was observed that the precision and accuracy of the uranium and zirconium values were unsatisfactory. Investigation of the methods being used led to the conclusion that zirconium was probably interfering with the uranium determination and that arsenic and silica were contaminating the zirconium oxide residues. The necessary remedial action will be taken, and it is anticipated that the accuracy and precision of both the uranium and

[22] R. L. McCutchen, "ANP Analytical Laboratory," *Anal. Chem. Quar. Prog. Rep. Sept. 26, 1952*, ORNL-1423 (in press).

TABLE 21. STATISTICAL EVALUATION OF THE PRECISION AND ACCURACY OF CONTROL RESULTS OBTAINED BY USE OF YOUDEN'S METHOD OF DAILY DIFFERENCE

DETERMINATION	METHOD	NUMBER OF DETERMINATIONS	CONCENTRATION RANGE (μg/ml)	STANDARD DEVIATION (%)		DIFFERENCES OUTSIDE CONTROL LIMITS[a] (%)
				Fourth Quarter	Third Quarter	
U	Jones reductor - ceric sulfate	43	25 to 50[b]	0.25	0.4	5
Ni	Dimethylglyoxime[c]	40	10 to 40	2	2	13
	Dimethylglyoxime[d]	33	10 to 40	5	7	
Cr	Diphenylcarbazide bismuthate	44	10 to 40	1.5	1	9
Fe	α,α'-Bipyridyl	40	10 to 40	1.5	2.5	18
Mn	Periodate	8	10 to 40	2.5	2.5	0

[a] 95% probability level.

[b] mg/ml.

[c] Process samples.

[d] Daily control standards.

TABLE 22. STATISTICAL EVALUATION OF THE PRECISION AND ACCURACY OF TEST RESULTS REPORTED FOR STANDARD EUTECTIC CONROL SOLUTIONS

DETERMINATION	METHOD	NUMBER OF DETERMINATIONS	MAGNITUDE OF MEASURED QUANTITY	CONCENTRATION RANGE (μg/ml)	STANDARD DEVIATION (%)	CONTROL LIMITS (Limit of error, %)*	BIAS
U	Potentiometric (chromous-ferric)	64	~4 ml	0.6 to 1.1**	1.7	3.5	Positive
Zr	Phenylarsonic acid	64	~0.15 mg	1.0 to 2.5**	2.0	4	Positive
Fe	o-Phenanthroline	81	O.D. > 0.1***	3 to 5	6.5	13	Positive
Ni	Dimethylglyoxime (5-cm cells)	85	O.D. > 0.1	3 to 5	8.5	17	Positive
	Dimethylglyoxime (1-cm cells)	23	O.D. > 0.1	3 to 5	9.0	18	Positive
Cr	Diphenylcarbazide	59	O.D. > 0.1	3 to 5	5.0	10	None

*95% probability level.

**mg/ml.

***O.D. = optical density.

zirconium test results will be improved during the next quarter.

The reason for the positive bias that was observed during this period for the nickel and iron values is being investigated. It is believed that residual fluoride may be one source of trouble; however, at this time it is not possible to reach any definite conclusion.

A summary of the control values reported for this quarter is given in Table 22.

Analytical Chemistry Laboratories (X-10). In general, the precision of the uranium and thorium test results has been good, with some improvement being noted for the fluorometric uranium values. The trend toward a negative bias observed for the colorimetric thorium results (47 μg of thorium per milliliter) continued but was corrected when a new thorium standard (250 μg of thorium per milliliter) was substituted. Such biases as were observed last quarter have been eliminated either by substitution of new control standards or by appropriate remedial action. Therefore the accuracy for this period is satisfactory. The control results reported for uranium and thorium are summarized in Table 23.

TABLE 23. ANALYTICAL LABORATORIES (X-10 SITE) URANIUM AND THORIUM PROGRAM

SAMPLE CODE NO.	LABORATORY NO.	DETERMINATION	METHOD	NUMBER OF DUPLICATES	CONCENTRATION (μg/ml)	CONTROL LIMITS (Limit of error, %)*		DETERMINATIONS OUTSIDE CONTROL LIMITS (%)	BIAS
						Found	Established		
E-1	4500	U	Fluorometric	64	2.5	5	10	3	None
	3019	U	Fluorometric	160	2.5	7	11	6	None
D-2	4500	U	Colorimetric (thiocyanate)	19	506	3	2	5	Negative
	3019	U	Colorimetric (thiocyanate)	54	506	2	3	2	Negative
Th-6	4500	Th	Colorimetric (Thoron)	45	250	3	3	5	None
Th-5	4500	Th	Colorimetric (Thoron)	19	47	3	3	0	Negative
G-2	4500	U	Colorimetric (thiocyanate)	45	2.53**	3	2	10	Positive
	3019	U	Colorimetric (thiocyanate)	108	2.53**	2	3	2	None
Th-4	4500	Th	Colorimetric (Thoron)	64	93**	2	2	3	Positive

*95% probability level.

**mg/ml.

SERVICE ANALYSES

H. P. House

ANALYTICAL SERVICES FOR ANP PROJECT

L. J. Brady S. A. Reed
J. R. Lund

Analysis of NaK for Beryllium. During the latter part of the quarter, the number of samples to be analyzed for beryllium increased significantly. A major group of these samples came from tests that were carried out by the Reactor Chemistry group to determine the compatibility of BeO and and NaK. In addition to the analysis of alcoholic and aqueous solutions, a few solid samples that consisted of segments of metal tubes and flanges from test equipment were dissolved and tested for beryllium. Interfering metal ions were removed by electrolytic deposition in a mercury cathode, and the beryllium was determined colorimetrically by a method that employed *p*-nitrobenzeneazo-orcinol as the chromogenic agent.

Gravimetric Determination of Zirconium. The results of comparative tests completed during this period indicate that mandelic acid affords several advantages over phenylarsonic acid as a precipitating agent in the gravimetric determination of zirconium in fluoride eutectics. Therefore the mandelic acid method was adopted for all routine zirconium determinations during the last half of this period.

Analysis of Uranium Tetrachloride. A series of samples of UCl_4 was analyzed for the major components, uranium and chloride, and for the impurities, UO_2 and $UOCl_2$. Each sample was refluxed with ammonium oxalate, and the uranium content of the residue was then determined and reported as UO_2. The $UOCl_2$ was determined indirectly by measuring the chloride content of the residue after dissolution of the UCl_4 by anhydrous methyl acetate.

Impurities in Lead. Minor impurities (Fe, Ni, Cr) in lead were determined by applying colorimetric methods to the analysis of the electrolyte following removal of the lead by electrolytic deposition.

Analysis of Alkali Hydroxides. Alkali hydroxide samples were analyzed for iron, chromium, and nickel. Because the material as received was not homogeneous and could not be reduced to fine particle size, the entire sample was dissolved to ensure that a representative aliquot was used in the test.

Work for General Electric Co. Work completed for the General Electric Co. included: tests of alkali metals to determine the relative concentrations of sodium and lithium, tests for impurities in sodium, and specification tests of mineral oil.

Backlog of Samples. The backlog of samples was reduced from 203 to 115 during the quarter. A total of 951 samples was analyzed. Approximately 60% of the work was submitted by the Reactor Chemistry group, 22% by the ANP Experimental Engineering section, and 18% came from miscellaneous sources.

ANALYSIS OF ORES AND RELATED MATERIALS

W. F. Vaughan

The major portion of the work consisted of the analysis of Florida Leach Zone ores, leached residues, tailings, aqueous leach solutions, organic extracts, and raffinates for uranium and, in many cases, for major components which included Al, Fe, Ca, NO_3^-, SO_4^{--}, PO_4^{---}, and SiO_2.

Increased emphasis was placed on the analysis of lignites and of samples derived from the experimental processing of uraniferous lignites for uranium recovery. A study was made of the

TABLE 24. SUMMARY OF ANALYTICAL SERVICE WORK AT Y-12 SITE FOR THE FOURTH QUARTER 1952

	NO. OF PERSONNEL		ORNL DIVISIONS REQUESTING ANALYSES							OTHERS REQUESTING ANALYSES					
	TECHNICAL	NONTECHNICAL	ANP	ELECTROMAGNETIC	ISOTOPE RESEARCH AND PRODUCTION	MATERIALS CHEMISTRY	REED	CHEMICAL TECHNOLOGY	CHEMISTRY	Y-12 ADP PROCESS IMPROVEMENT	Y-12 STORES	MAINTENANCE BUILDING AND SHOPS	GENERAL ELECTRIC COMPANY	MISCELLANEOUS	TOTAL DETERMINATIONS
LABORATORY MAKING ANALYSES			Number of Determinations												
HRP Analytical	2	6					12,006	149							12,155
ANP Analytical	4	14	2,219	117		4,839	30			151			181		7,537
Raw Materials	4	11	38		144	6,376			164			22		15	6,759
Metals and Alloys	1	1	20				230								250
Miscellaneous Materials	1	4				5,608					150	14			5,772
TOTAL	12	36	2,277	117	144	16,823	12,266	149	164	151	150	36	181	15	32,473

effects of high sulfate content of lignites, such as is found in the lignites under test, on the interpretation of test results, especially proximate analysis results. The results of this study have been reported separately.

A series of organophosphorus compounds is being synthesized by the Materials Chemistry Division. The precision and accuracy required in carbon and hydrogen determinations incident to these syntheses, often with small amounts of sample, made it necessary to employ microcombustion techniques. The necessary precision and accuracy have been attained and several operators have been trained for this work.

ANALYTICAL SERVICES FOR HRP

A. F. Roemer, Jr.

The work of the HRP Analytical Laboratory continues to consist almost entirely of the analysis of uranyl sulfate and uranyl fluoride solutions and of uranium trioxide slurries. These materials are analyzed for uranium and corrosion products, principally nickel, iron, and chromium, by methods that have been reviewed in previous reports. No significant change in methods has been made during the quarter.

The number of samples from static corrosion tests decreased sharply during this quarter, but an increase is anticipated in the near future. Samples from dynamic corrosion tests included uranyl salt solutions and uranium oxide slurries. The amount of this work was essentially the same as during the previous quarter.

The number of samples of uranyl sulfate solutions of low uranium concentration (approximately 5 g of uranium per liter) increased sharply; samples of high concentration (approximately 300 g of uranium per liter) decreased markedly.

As a result of the over-all decrease in samples, the number of laboratory personnel was decreased from 12 to 8. A total of 1413 samples was received by the laboratory and results of the analyses of 1517 samples were reported during the quarter, 12,079 determinations having been made. A backlog of 139 samples exists.

MISCELLANEOUS ANALYSES

W. F. Vaughan

The Y-12 Stores has initiated a program of specification testing of lubrication oils. The required tests are being performed by this laboratory and consist of the determinations of specific gravity, viscosity, moisture, steam emulsion number, neutralization number, and carbon residue.

A total of 3582 samples was received, and analytical results for 3385 samples have been reported during the period.