[redacted]

CENTRAL RESEARCH LIBRARY
DOCUMENT COLLECTION

MARTIN MARIETTA ENERGY SYSTEMS LIBRARIES
3 4456 0353218 5

ORNL 1483
Progress

LABORATORY RECORDS
1954

STABLE ISOTOPE RESEARCH AND PRODUCTION DIVISION QUARTERLY PROGRESS REPORT

FOR PERIOD ENDING DECEMBER 31, 1952

DECLASSIFIED
CLASSIFICATION CHANGED TO:
BY AUTHORITY OF: [illegible]
BY: [illegible]

AEC RESEARCH AND DEVELOPMENT REPORT

OAK RIDGE NATIONAL LABORATORY
CENTRAL RESEARCH LIBRARY
CIRCULATION SECTION
4500N ROOM 175
LIBRARY LOAN COPY
DO NOT TRANSFER TO ANOTHER PERSON
If you wish someone else to see this report, send in name with report and the library will arrange a loan.
UCN-7969 (3 9-77)

OAK RIDGE NATIONAL LABORATORY
OPERATED BY
CARBIDE AND CARBON CHEMICALS COMPANY
A DIVISION OF UNION CARBIDE AND CARBON CORPORATION
UCC
POST OFFICE BOX P
OAK RIDGE, TENNESSEE

[redacted]

[redacted]

ORNL 1483

This document consists of 44 pages.
Copy 4 of 97 copies. Series A.

Contract No. W-7405-eng-26

STABLE ISOTOPE RESEARCH AND PRODUCTION DIVISION

QUARTERLY PROGRESS REPORT

FOR PERIOD ENDING DECEMBER 31, 1952

C. P. Keim, Director

DATE ISSUED

MAR 9 1953

OAK RIDGE NATIONAL LABORATORY
Operated by
CARBIDE AND CARBON CHEMICALS COMPANY
A Division of Union Carbide and Carbon Corporation
Post Office Box P
Oak Ridge, Tennessee

MARTIN MARIETTA ENERGY SYSTEMS LIBRARIES

3 4456 0353218 5

[redacted]

[redacted]

ORNL 1483
Progress

INTERNAL DISTRIBUTION

1. C. E. Center
2. Biology Library
3. Health Physics Libr
4-5. Central Research Libr
6. Reactor Experimental Engineering Library
7-12. Central Files
13. C. E. Larson
14. W. B. Humes (K-25)
15. L. B. Emlet (Y-12)
16. A. M. Weinberg
17. E. H. Taylor
18. E. D. Shipley
19. R. C. Briant
20. F. C. VonderL
21. J. A. Swart
22. S. C. Lin
23. F. L. S ly
24. A. H ell
25. A laender
26. M. T Kelley
27. G H. Clewett
28. Z. Morgan
29. J. S. Felton
30. A. S. Householder
31. C. S. Harrill
32. C. E. Winters
33. D. W. Cardwell
34. E. M. King
35. D. D. Cowen
36. P. M. Reyling
37. C. P. Keim
S. Cromer
39. J. M. Herndon
40. S. Livingston
41. W. Hurd
42. C Normand
43. C. aldock
44. J. R. Nally, Jr.
45. Boyd We r

EXTERNAL DISTRIBUTION

46-51. Argon National Laboratory
52-53. Atomic ergy Commission, Washin n
54-56. Brookhave National Laboratory
57-58. Carbide an rbon Chemicals mpany (K-25 Plant)
59-62. Carbide and C bon Chemica Company (Y-12 Plant)
63. Chicago Patent up
64. Chief of Naval Re rch
65-67. duPont Company
68. General Electric Com y, Richland
69. Hanford Operations
70. Iowa State College
71-72. Knolls Atomic Pow Labor y
73. Los Alamos Scie ic Labora
74. Naval Research aboratory
75-76. New York Op ations Office
77. Patent Branc Washington
78. Savannah R er Operations Office, usta
79. Savannah ver Operations Office, W ington
80-82. Univers of California Radiation Labor ry
83-97. Techn Information Service, Oak Ridg

[redacted] [redacted]

[redacted]

Reports previously issued in this series are as follows:

Y-497	July 1, 1949 to September 30, 1949
Y-550	October 1, 1949 to December 31, 1949
Y-586	January 1, 1950 to March 31, 1950
Y-636	April 1, 1950 to June 30, 1950
Y-685	July 1, 1950 to September 30, 1950
Y-723	October 1, 1950 to December 31, 1950
Y-765	January 1, 1951 to March 31, 1951
Y-797	April 1, 1951 to June 30, 1951
Y-821	July 1, 1951 to September 30, 1951
ORNL-1228	October 1, 1951 to December 31, 1951
ORNL-1298	January 1, 1952 to March 31, 1952
ORNL-1356	April 1, 1952 to June 30, 1952
ORNL-1434	July 1, 1952 to September 30, 1952

[redacted]

[redacted]

[redacted]

STABLE ISOTOPE SEPARATION RESEARCH AND CALUTRON OPERATIONS

C. E. Normand, Department Head

INTRODUCTION

During the second quarter of fiscal year 1953, isotopes of titanium, sulfur, and silicon were collected in the beta channels. The total time of the alpha calutrons and the major effort of department personnel were devoted to a special separation program that has been reported, in part, in a limited access report.[1]

COLLECTIONS

Three elements were processed that yielded 12 enriched isotopes. These collections and the special collections carried out in the alpha channels were made by operating personnel under the direction of W. A. Bell, R. L. Caldwell, G. J. Fisher, C. V. Ketron, L. O. Love, and K. A. Spainhour.

Titanium, Series GA-XBX

Collection of the isotopes of titanium (Ti^{46}, Ti^{47}, Ti^{48}, Ti^{49}, and Ti^{50}) was started on August 28 and completed on October 10, 1952. Equipment and operating procedure remained as reported in the last quarterly report.[2]

For the complete series, the total monitored collection was 53,504 ma-hr during 1090 inhr, for an average production rate of 49.1 ma.

Because of a defective connecting plug in the ion monitoring circuits, the received beams were mismonitored by one mass unit (Ti^{49} in Ti^{50} pocket, etc.) during 67 hr of a 515-hr collection. As a result, the 32.51 g of material collected was below standard in isotopic purity

---

(1) C. E. Normand et al., "Progress Report of Lithium Isotope Production by the Electromagnetic Method," ORNL-1455 (Nov. 28, 1952).

(2) "Stable Isotope Research and Production Division Quar. Prog. Rep. July 1 to Sept. 30, 1952," ORNL-1434.

[redacted]

and was recovered as separate samples. In normal collections, the following estimated weights, in grams, of titanium isotopes were produced:

Ti^{46}	6.07
Ti^{47}	2.28
Ti^{48}	49.80
Ti^{49}	2.74
Ti^{50}	2.41
Total	63.30

Sulfur, Series GB-XBX

Collection of the isotopes of sulfur (S^{32}, S^{33}, S^{34}, and S^{36}) was started October 10 and completed November 30, 1952.

Charge material in all runs was carbon disulfide vapor fed from an external charge bottle and controlled by a bellows type of leak valve that had been modified to permit large vapor flow. The arc chamber was of the shallow, channeled, floating anode type equipped with a 1/8- or 3/16-in. ion exit slit. Standard zero degree electrodes and curved filaments of 170-mil tantalum were used throughout the run.

The ions were received in copper pockets containing copper filings and located behind 1/8-in. defining slots. Extra water cooling was supplied to the S^{32} pocket, and internal receiver shielding was added around the S^{36} pocket.

Operation was generally smooth. Periodic unloading of the S^{32} pocket was required to prevent shorting by growth formation. Average filament life was 37.6 hr, and filament failure was the major cause of run termination.

The series consisted of 36 runs totaling 1207 inhr and a monitored collection of 29,367 ma-hr. The average production rate was 24.3 ma with a peak rate of 46.4 ma.

The following estimated weights, in grams, of sulfur isotopes were collected:

S^{32}	33.64
S^{33}	0.27
S^{34}	1.21
S^{36}	0.024
Total	35.144

Silicon, Series - XBX

Collection of the isotopes of silicon (Si^{28}, Si^{29}, and Si^{30}) was started December 1, 1952 and is still in progress.

Silicon tetrachloride ($SiCl_4$) vapor from an external charge bottle was supplied to a low temperature source having a shallow, channeled arc chamber with conventional filament, collimating slot, and floating anode. A 3/16-in. ion exit slit and zero degree electrodes at standard spacings proved most satisfactory in use.

The ions were received in water cooled copper pockets located behind 1/8-in. defining slots. Internal shielding between pockets was provided.

Operation was quiet, with little sparking or erosion of electrodes or receiver. Thus, with only minor servicing, such as filament and an occasional arc chamber change, units remained in service for five to seven consecutive runs. Operation without nitrogen support gas gave optimum production but accentuated the problem of controlling vapor flow to the arc.

The monitored collection for the month was 17,595 ma-hr during 796 inhr, for an average production rate of 22.1 ma. Peak output was 36.4 ma.

The following estimated weights, in grams, of silicon isotopes were collected:

Si^{28}	17.07
Si^{29}	0.84
Si^{30}	0.52
Total	18.43

DEVELOPMENT

Developmental work during the last quarter has been limited, almost entirely, to aspects of the special production program being carried out in the alpha calutrons and is reported elsewhere.

Effect of Magnetic Field on Ion Beam Focusing (G. M. Banic, W. A. Bell, L. O. Love, W. K. Prater)

Experiments were carried out in the beta calutron to determine the effect of magnetic field strength on the focusing of ion beams at the receiver. Ions from a grid-type source having 1.125 in.^{2} of open area were collected on a 5-in. radius in a receiver that provided separate monitoring of the ion currents to the receiver faceplate and to the collector

pockets located behind defining slots in this plate. Setting the magnetic field at arbitrary values ranging from 2.89 to 4.97 kilo-oersteds and adjusting the accelerating potential to produce ion motion in the fixed (5-in. radius) trajectories permitted determination of optimized faceplate and receiver pocket currents. The results of such a series of determinations are shown in Fig. 1. These data indicate that little change in total output (faceplate plus pocket current) results from variation of the magnetic field over the explored range (3000 to 5000 oersteds). The ratio of pocket current to faceplate current, that is, the degree of focus, shows marked improvement with increasing field up to about 4000 oersteds but remains es-

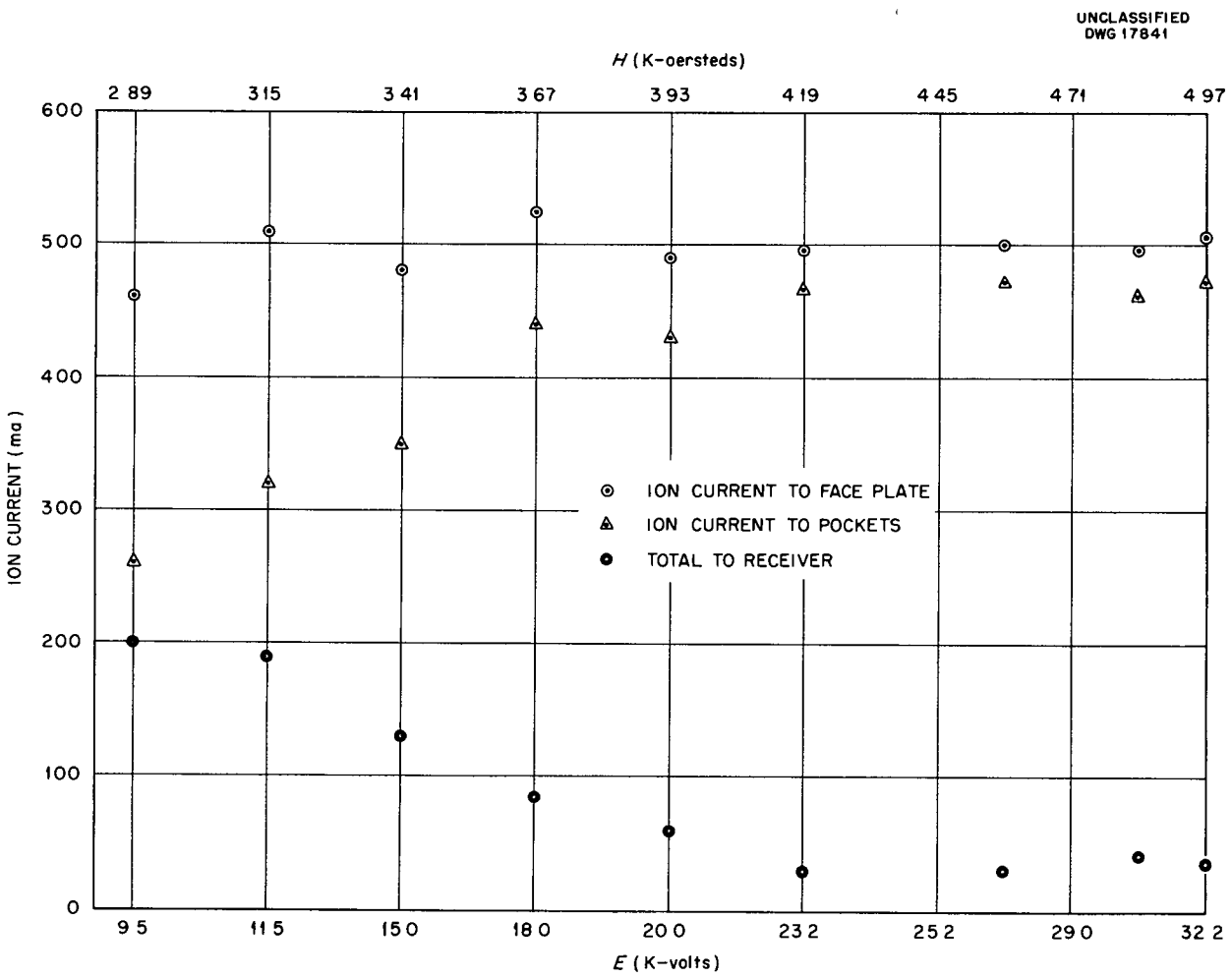

Fig. 1. Ion Collection at Constant Radius vs. Magnetic Field and Accelerating Voltage

sentially constant for higher fields.

Diode Operation

At the suggestion of O. C. Yonts of the Isotope Analysis Methods Laboratory, and under his direction, seven silicon collection runs were made in the beta calutrons with the source filament operating below saturation as in gas filled diodes. Extended filament life was expected from this mode of operation. A full report of these experiments is included in the Isotope Analysis Methods Laboratory's section of this report.

STABLE ISOTOPE CHEMISTRY, RESEARCH, AND PRODUCTION

Boyd Weaver, Department Head

INTRODUCTION

The chief functions of the Isotope Chemistry Research and Production Department are the supply of suitable charge materials for isotope separation by the calutrons, chemical refinement of enriched isotopes, and the preparation of materials for their mass analysis. Chemical services and unusual compounds are also supplied to other departments of the Stable Isotope Research and Production Division.

The department carries on research activities in various fields related to isotope production and use, with current interest centered around the rare earth elements.

All refined isotopes are stored in the chemistry depositories, and the preparation of all samples for shipment is performed by personnel of this department. Unused portions and many processed residues of isotopes are returned by research institutions for restoration in the laboratory's stock of isotopes. Some of these require reprocessing to make them suitable for reuse; others are in quantities too small for further handling.

Quarterly Sample Summary

Isotope samples on which refinement was completed	16
Samples in process of refinement, December 31	26
Samples awaiting chemical refinement, December 31	13
Samples submitted to Mass Analysis Laboratory	10
Mass analyses reported	22
Samples awaiting mass analysis, December 31	37
Stable isotope shipments and transfers made	52

SPECIAL PROJECTS (W. C. Davis, C. W. Sheridan, C. F. Harrison, R. L. Bailey)

Much of the effort of the department was devoted to special research and production activities, which will be reported in a separate report.

CALUTRON SERVICES (C. W. Sheridan, C. F. Harrison)

Preparation of charge materials and other chemical services were supplied for the separation of isotopes of lithium, titanium, sulfur, and silicon.

CHEMICAL REFINEMENT (R. L. Bailey)

Work was done on the chemical refinement of isotopes of tin, barium, neodymium, germanium, and thallium. New series of barium and germanium were completed. All samples of thallium isotopes on hand were reprocessed to improve their physical form and chemical composition.

Barium isotopes were refined by a procedure that included the following steps:

1. The carbon pockets were burned in an oxygen atmosphere at 800°C.
2. The ash was freed of SiO_2 by dehydration of HCl solution, followed by redissolving and filtration of $BaCl_2$.
3. Partial purification was obtained by a hot ammonium sulfide precipitation at pH 8.
4. The barium was precipitated twice by $(NH_4)_2CO_3$, and separated and washed by centrifugation. The $BaCO_3$ was dissolved between precipitations with CH_3COOH. The carbonate contained calcium and strontium.
5. $BaCrO_4$ was precipitated from CH_3COOH solution by $(NH_4)_2CrO_4$, centrifuged and washed.
6. $BaSO_4$ was precipitated by addition of H_2SO_4 to a HCl solution of the $BaCrO_4$ and washed with water and acetone.
7. The $BaSO_4$ was fused with Na_2CO_3 in a platinum crucible; the cake was broken up in water; and the Na_2SO_4 was removed by repeated water washings and centrifugation.
8. The $BaCO_3$ was dissolved in CH_3COOH and filtered into a solution of NH_4OH and $(NH_4)_2CO_3$.
9. The reprecipitated $BaCO_3$ was digested, washed repeatedly with water and acetone, and dried to constant weight at 250°C.

The yields and spectrographic analyses are given in Table 1.

Table 1. Production Data on Barium Isotopes

Sample No.	Isotope	Weight of $BaCO_3$(g)	Impurities Found (%)								
			Ca	Cu	Fe	K	Li	Mg	Na	Sr	Sn
FT 720 (a)	Ba^{130}	0.1178	0.08		<0.04			<0.04	0.02	0.1	
FT 721 (a)	Ba^{132}	1.1619	<0.08		0.04			<0.04	0.01	0.1	
FT 722 (a)	Ba^{134}	7.1966					<0.01		<0.01		
FT 724 (a)	Ba^{136}	7.4988							<0.01		
FT 726 (a)	Ba^{138}	53.5067				<0.01	<0.01		0.01		
FU727 (a)	Ba^{130}	0.1497	<0.08	<0.04	<0.04			<0.04	0.02	0.1	
FU728 (a)	Ba^{132}	0.4344			<0.04			<0.04	0.01	<0.1	
FU729 (a)	Ba^{134}	2.8532					<0.01		0.01		
FU730 (a)	Ba^{135}	7.6600			0.04				0.01		
FU731 (a)	Ba^{136}	11.1642	0.1				0.01		0.02		<0.02
FU732 (a)	Ba^{137}	15.3454						<0.04	0.01		
FU733 (a)	Ba^{138}	50.0728							0.08		

Germanium isotopes were refined by the following procedure:

1. Part of the germanium was dissolved from the carbon pockets with 3% H_2O_2.
2. The pockets were burned at 850°C in an oxygen atmosphere, and the ash was dissolved in large volumes of water.
3. All solutions were combined, filtered, and heated to boiling.
4. The germanium was precipitated by addition of 10% tanic acid in slight excess to the solution containing 2 to 5 g of $(NH_4)_2SO_4$.
5. The precipitate was allowed to cool and settle, then centrifuged and washed repeatedly with 5% NH_4NO_3.
6. The cake was transferred to a Buchner filter, freed of as much water as possible, and ignited. It was necessary to heat very slowly and to keep the temperature below 400°C until the organic material was completely charred. The ignition was then completed at 1000°C in an oxygen atmosphere.

Since the products had a pink color and were not of uniform crystalline appearance, further treatment was given to three samples:

7. The oxides were dissolved in boiling water.
8. GeS_2 was precipitated by H_2S from a 5 $\underline{N}$ H_2SO_4 solution and filtered on paper.
9. The sulfide was dissolved with hot NH_4OH into a fluorothene beaker and cooled .
10. Most of the GeO_2 was precipitated by addition of H_2O_2, filtered and transferred to a porcelain crucible. Since the remainder of the germanium had been purified at this point, the solution was evaporated and the solid added to the precipitate.
11. After addition of a little H_2SO_4, the solids were dried, heated carefully, and finally ignited at 1000°C in an oxygen atmosphere. The products of this treatment were very white and crystalline.

Yields and spectrographic analyses are given in Table 2.

Thallium isotopes, which had been placed in the inventory previously, were found to be of uncertain composition. Apparently in some cases, the oxide had not been completely oxidized to the Tl^{3+} state, and in others it was hydrated. Therefore all the samples on hand were reprocessed, some simply by further ignition but others through solution chemistry. The most significant point to be made is that treatment by H_2O_2 in alkaline solution does not completely oxidize thallium. Complete oxidation can be attained in either acid or alkaline

Table 2. Production Data on Germanium Isotopes

Isotope	Weight of GeO_2(g)	Impurities Found (%)			
		Cu	Fe	Mg	Si
Ge^{70}	15.4842	<0.04			0.08
Ge^{72}	22.4342	<0.04			<0.08
Ge^{73}	5.3560	0.04	0.04		0.1
Ge^{74}	25.4637				<0.08
Ge^{76}	7.2906			<0.04	

solution by the use of ammonium persulfate $\left[(NH_4)_2S_2O_8\right]$. The precipitate from addition of NH_4OH may be ignited to the black crystalline form of Tl_2O_3.

This information is not known to be in the published literature, but was obtained from the PhD thesis of G. E. Lindemulder, University of Michigan, through the courtesy of Prof. H. H. Willard.

MASS ANALYSIS (F. M. Scheitlin)

Ten samples of isotopes of calcium, barium, and lithium were prepared in suitable form for mass analysis.

SEPARATION OF RARE EARTHS (F. A. Kappelmann, F. B. Thomas, F. M. Scheitlin)

Progress has been made in the fractionation of a gadolinium concentrate by continuous countercurrent extraction with tributyl phosphate and nitric acid. Operating conditions were studied with an 11-stage York-Scheibel laboratory scale column. A separation factor of 20 between samarium and gadolinium was attained in several experiments. This is calculated to be about three actual stages for the conditions used.

In the latter part of the quarter, attention was given entirely to operation of a considerably larger and potentially much more efficient system. This consists of a 2-in. pulse column with 140 plates spaced 1 in. apart and pierced with 1/32-in. holes to give 23% free space. Variable speed pumps introduce TBP at the bottom of the column, nitric acid at the top, and the feed solution of rare earths in nitric acid at the tops of any one of the lower three quarters of the column. An additional pump, without check valves, superimposes a pulsating motion on the flow through the system. The TBP effluent is passed through a second pulse column

for scrubbing, and the resulting two aqueous solutions of rare earths are concentrated in evaporators. An additional simple column reconditions the TBP for recycling. Since TBP loaded with rare earths is heavier than water, 5 N nitric acid was used as a scrubbing solution. The distribution coefficients of all rare earths between TBP and 5 N nitric acid are so low that the acid will scrub out all of them in a few stages.

Experience in application of this system to rare earth extraction was gained by processing 20 lb of a crude neodymium concentrate. Because of the low extraction coefficients of the lighter rare earths and previous difficulties with changes in composition of TBP-Varsol mixtures, the TBP was used undiluted. Large variations in solvent behavior, previously experienced, have now been definitely attributed to loss of Varsol by evaporation during mixing in open containers.

The first fractionation attempted was a division between samarium and europium. Although optimum conditions were not attained in the short time required to exhaust the supply, suitable ratios of flow rates were determined, and most of the material was separated in at least the right direction. It was evident, however, that the number of effective stages in this extraction is only a small fraction of the number of mechanical plates in the column. The yield of the experiments was approximately 10% of the starting material, containing almost all the original content of elements heavier than europium, considerably less of the samarium, and very much less of the neodymium. Table 3 contains spectrographic analyses of the Lindsay Code 620 material used in the experiment, the product extracted by the TBP, and the Lindsay Code 920 material.

Table 3. Rare Earth Analyses

Rare Earth	Percentage of Rare Earth Found In Code 620	In Extract	In Code 920
La_2O_3	3.2	<1	<1
Pr_6O_{11}	12.1	<1	<1
Nd_2O_3	70	2.2	2
Sm_2O_3	10.8	28	60
Eu_2O_3	0.5	2.9	1.5
Gd_2O_3	3.8	38	25
Tb_4O_7	<1	3.4	0.6
Dy_2O_3	1	8	4
Y_2O_3	1.3	12	4

The major fraction was reprocessed with an increased TBP flow rate to divide between praseodymium and neodymium. The system operated with no great mechanical difficulties and yielded a product with as high as 50% Pr_6O_{11}. Attempts to separate this from the La_2O_3 present were unsuccessful because of flooding of the column. It might have been possible to decrease the feed rate sufficiently to allow operation, but La_2O_3 could probably not be economically purified in this manner.

Work on fractionation of the large quantity of Lindsay Code 920 material on hand had barely begun before the end of the quarter. An attempt is being made to conserve all the gadolinium and europium in one fraction while separating them as well as possible from samarium. Optimum conditions have not yet been determined.

ISOTOPE SHIPMENTS AND REQUESTS

Preparation for Shipment

Fifty-two individual samples were prepared for shipment to laboratories within and outside the Atomic Energy Commission. Details of the shipments made during the quarter and the present status of requests for isotopes are given in Table 4.

Table 4. Summary of Isotope Shipments and Requests for October, November, and December 1952

Request Serial No.	Requestor	Isotope	Series No.	Sample No.	Quantity (mg)	Date Shipped
Shipments made:						
B-2956	Vanderbilt University	Hf^{174}	ET	602(a)	20.3	10-1
B-2944S	Argonne National Laboratory	Sb^{123}	BT	275(a)	1002.5	10-6
B-2945S	Argonne National Laboratory	Hg^{198}	DR	486(a)	701.0	10-6
B-2946S	Argonne National Laboratory	Hg^{199}	DR	487(e)	163.0	10-6
B-2947S	Argonne National Laboratory	Hg^{200}	DR	488(f)	1003.0	10-6
B-2948S	Argonne National Laboratory	Hg^{202}	DR	490(f)	1006.0	10-6
B-2949S	Argonne National Laboratory	Hg^{204}	DR	491(e)	1002.0	10-6
B-2950S	Argonne National Laboratory	Hg^{204}	DR	491(b)	12.0	10-6
B-2966	University of California	Cr^{53}	EU	611(a)	440.7	10-15
B-2967	University of California	Ca^{43}	FF	650(a)	85.1	10-15
B-3006S	Radiation Lab., Univ. of California	Cu^{63}	DU	497(a)	600.5	10-15
B-3007S	Radiation Lab., Univ. of California	Cu^{65}	DU	498(a)	600.5	10-15
B-3008S	Radiation Lab., Univ. of California	Ni^{62}	AS-AT	144-150(a)	20.2	10-15
B-2998S	Los Alamos Scientific Laboratory	Ti^{48}	EN	578(a)	5000.4	10-16
B-3017	University of Rochester	Ca^{48}	FO	694(a)	200.4	10-23
B-2997	University of California	Fe^{57}	DL	453(d)	1000.3	10-28
B-3036S	Oak Ridge National Laboratory	Li^{6}	CU	378(a)	2.0	11-1
B-3037S	Oak Ridge National Laboratory	Li^{6}	CT	376(a)	2.0	11-1
B-3032	Columbia University	Cr^{50}	EU	609(a)	100.3	11-5
B-3038S	Radiation Lab., Univ. of California	Pb^{206}	EO	582(a)	1000.6	11-5
B-3041	Princeton University	Li^{7}	EZ	628(e)	100.1	11-5

Table 4 (continued)

Request Serial No.	Requestor	Isotope	Series No.	Sample No.	Quantity (mg)	Date Shipped
Shipments made:						
B-3010S	Brookhaven National Laboratory	Ce^{136}	FR	706(a)	100.5	11-6
B-3011S	Brookhaven National Laboratory	Ce^{138}	FR	707(a)	400.8	11-6
B-3012S	Brookhaven National Laboratory	Ce^{140}	FR	708(a)	5001.0	11-6
B-3053	University of Michigan	W^{180}	EL	561(a)	100.2	11-10
B-3013S	Brookhaven National Laboratory	Ce^{142}	FR	709(a)	500.3	11-6
B-3039S	Radiation Lab., Univ. of California	Pb^{207}	EO	583(a)	1000.5	11-10
B-2586S	Argonne National Laboratory	Mo^{100}	R-T	59(ar)	200.2	11-12
B-2872S	Argonne National Laboratory	Mo^{100}	R-T	59(b)	200.1	11-12
B-3027	University of Utah	Hg^{202}	DR	490(fs)	152.7	11-13
B-3051	Columbia University	Re^{187}	CP	357(a)	300.2	11-13
B-3060	Columbia University	Ag^{107}	EA	522(a)	500.4	11-19
B-3084S	Oak Ridge National Laboratory	Nd^{146}	EQ	591(a)	174.0	11-21
B-2396S	Argonne National Laboratory	Ge^{76}	BD-BE	209-214(a)	15.4	11-28
B-2401S	Argonne National Laboratory	Nd^{150}	EQ	593(ar)	24.9	11-28
B-2006S	Brookhaven National Laboratory	Ba^{130}	FT	720(a)	10.2	12-2
B-2007S	Brookhaven National Laboratory	Ba^{132}	FU	728(a)	10.8	12-2
B-1368	University of Michigan	Ba^{130}	FT	720(a)	20.1	12-4
B-2916S	Oak Ridge National Laboratory	Ge^{76}	FZ	751(a)	100.1	12-11
B-2840S	Argonne National Laboratory	Hf^{180}	ET	607(a)	50.5	12-16
B-2841S	Argonne National Laboratory	Ti^{50}	EN	580 (a)	10.2	12-16
B-3129S	Oak Ridge National Laboratory	Ca^{46}	FO	693(a)	5.2	12-22

Table 4 (continued)

Request Serial No.	Requestor	Isotope	Series No.	Sample No.	Quantity (mg)	Date Shipped
Shipments made·						
B-3130S	Oak Ridge National Laboratory	Ca^{48}	FO	694(a)	10.2	12-22
B-3131S	Oak Ridge National Laboratory	V^{50}	FM	683(b)	5.1	12-22
B-3132S	Oak Ridge National Laboratory	Zn^{67}	EK	558(a)	30.1	12-22
B-3133S	Oak Ridge National Laboratory	Se^{82}	FG	659(b)	30.4	12-22
B-3134S	Oak Ridge National Laboratory	Zn^{70}	EK	560(a)	30.5	12-22
B-3135S	Oak Ridge National Laboratory	Rb^{85}	EW	619(a)	50.2	12-22
B-3136S	Oak Ridge National Laboratory	Ti^{50}	BF	580(a)	32.9	12-22
B-3101S	Brookhaven National Laboratory	Sm^{147}	FH	661(a)	200.4	12-29
B-3102S	Brookhaven National Laboratory	Sm^{148}	EM	570(a)	500.3	12-29
B-3103S	Brookhaven National Laboratory	Sm^{150}	EM	572(a)	250.3	12-29

Unfilled requests on hand December 31, 1952

Request Number	Date	Requestor	Isotope	Quantity Desired(mg)
Not separated:				
S-148	10-21-47	Argonne National Laboratory	Ir^{191}	20 to 30
S-148	10-21-47	Argonne National Laboratory	Ir^{193}	20 to 30
S-297	10-2-49	Argonne National Laboratory	$Pd^{102, 104, 105, 106, 108, 110}$	200 ea.
S-342	3-3-49	Oak Ridge National Laboratory	$Gd^{158, 160}$	10 ea.
S-343	3-3-49	Oak Ridge National Laboratory	$Dy^{158, 160}$	10 ea.

Table 4 (continued)

Request Number	Date	Requestor	Isotope	Quantity Desired(mg)
Requiring replenishment of inventory (quantity insufficient):				
S-328	3-2-49	Oak Ridge National Laboratory	B^{11}	10,000
Awaiting purchase order:				
B-397		University of Wisconsin	Ca^{46}	12
B-3003		University of Pittsburgh	K^{39}	100
B-3004		University of Pittsburgh	K^{41}	100
B-3084		Purdue University	Li^{6}	10
B-3085		Purdue University	Mg^{25}	20
B-3086		Purdue University	Mg^{26}	20
B-3119		Purdue University	In^{113}	10
B-3072		University of Wisconsin	Ce^{138}	30
B-3115		University of Wisconsin	Ca^{48}	20
B-3126S		Brookhaven National Laboratory	Ga^{69}	20
B-3127S		Brookhaven National Laboratory	Ga^{71}	20
B-3139		Massachusetts Inst. of Technology	Pb^{204}	400
B-3144S		Argonne National Laboratory	Li^{6}	385
With purchase order awaiting replenishment of inventory:				
B-269		Princeton University	B^{11}	500

- Table 4 (continued)

Request Number	Requestor	Isotope	Quantity Desired(mg)
Held by AEC Isotopes Division:			
S-361	Argonne National Laboratory	Os^{192}	10
S-581	Brookhaven National Laboratory	K^{40}	10
B-875	University of Illinois	Ba^{132}	10
B-1062	Kansas State College	K^{40}	1000
B-1161	Princeton University	K^{40}	150
B-1606	Naval Medical Research Lab.	Zn^{66}	3000
B-1819	University of Illinois	Ce^{136}	10
B-2333	Princeton University	Cd^{152}	50
B-2392	Ohio State University	Ba^{130}	100
B-2577S	University of California	Gd^{152}	10
B-2581S	Argonne National Laboratory	Mo^{94}	600
B-3062	University of Illinois	Si^{29}	100
B-3069	University of Michigan	Gd^{158}	100

Stable Isotope Sales (Fees)

On the basis of the nominal charge of $50 made to noncommission users of stable isotopes for individual shipments, the following summary has been compiled:

	July 1 to September 30, 1952	October 1 to December 31, 1952
Transfers within AEC	$ 2,100.00	$ 2,000.00
Cash sales (fees)	1,200.00	600.00
Total sales (fees) and transfers to date	$81,050.00	$83,650.00

ISOTOPE ANALYSIS METHODS LABORATORY

J. R. McNally, Jr., Department Head

INTRODUCTION

The work reported by this department pertains generally to spectroscopic investigations of elements and isotopes in their electromagnetic spectra for the wavelength range of 10^4 to 10^{-9} cm. Specific fields of investigation are nuclear resonance, microwave and infrared, optical spectroscopy, spectrochemistry, and x rays.

A compilation of nuclear moments has been made which includes data not previously published on more than 20 isotopes. Hyperfine structure studies of U^{235} have led to preliminary values for the nuclear magnetic moment and the nuclear quadrupole moment. Research on filament operating conditions has resulted in improved filament life for calutrons or cyclotron ionizing sources. Boron isotope spectrum lines have been studied in separated isotope samples. Echelle spectrographic studies have been made on rare earths in uranium and on uranium isotopes.

NUCLEAR RESONANCE

Nuclear Moment Data (H. E. Walchli)

A table of nuclear moment data has been compiled[3] and includes information as to A-N-Z, spin, measurement methods, frequency ratios measured, [illegible]nces, compounds, and a comparison frequency ratio to the proton for each known nuclide. A complete bibli-

[3] This table is being sent to contributors for final corrections before general publication as ORNL-1469.

ography of nuclear magnetic moment investigations is included. Best values of the magnetic moments have been computed and from these the diamagnetically corrected moments calculated. The Schmidt plots of μ vs. I are included, and graphs of the gyromagnetic ratio μ/I as a function of resonance frequency and field have been constructed.

These tables also include a discussion of nuclear magnetic shielding in chemical compounds, as well as tables and graphs depicting the observed shifts in magnetic field for all known cases. Twenty measurements in this laboratory that have not been previously published are included. Original chemical shift information on three elements, including unpublished work on selenium from this laboratory, are also incorporated in the table.

MICROWAVE SPECTROSCOPY

Vinylacetylene Microwave Spectra (H. W. Morgan, J. H. Goldstein[4])

Experimental work on the vinylacetylene (3-Buten-1-yne) molecule, $CH{:}CCH{:}CH_2$, is essentially complete. The J = 1 to 2, 2 to 3, and 3 to 4 transitions in the ground state, and the J = 3 to 4 transition in the excited state have been measured. In order to include all frequencies below 40,000 megacycles, the J = 0 to 1 absorption at 9,000 megacycles will be measured shortly. Table 5 contains microwave absorption frequencies of this molecule.

The J = 1 to 2 and J = 2 to 3 transitions agree excellently and yield molecular parameters as follows:

$$b + c = 9074.67 \text{ megacycles}$$
$$b - c = 415.12 \text{ megacycles}$$
$$\delta = 0.008905 \pm 0.000035$$
$$D_{JK} = -0.0876 \pm 0.0027 \text{ megacycles}$$
$$D_J \cong 0$$

where b is the intermediate rotational constant, c is the smallest rotational constant, δ is a molecular asymmetry parameter, and D_{JK} and D_J are centrifugal distortion coefficients for this molecule. The J = 3 frequencies are not fit by these parameters within the limits of experimental error.

Miscellaneous (H. W. Morgan)

Carbon monosulfide has been prepared and a study of its "lifetime" is under way prior to attempts to observe its microwave rotational spectrum.

---

[4] Consultant, Emory University, Atlanta, Georgia.

Table 5. Vinylacetylene Frequencies

Designation	Observed*(megacycles)	Predicted (megacycles)
$1_{10} - 2_{11}$	18,564.74	18,564.69
$1_{01} - 2_{02}$	18,146.52	18,146.49
$1_{11} - 2_{12}$	17,734.50	17,734.51
$2_{02} - 3_{03}$	27,212.71	27,212.74
$2_{11} - 3_{12}$	27,845.35	27,845.34
$2_{12} - 3_{13}$	26,600.00	26,600.00
$2_{20} - 3_{21}$	27,237.09	27,237.12
$2_{21} - 3_{22}$	27,226.03	27,225.98
$3_{03} - 4_{04}$	36,270.16	36,270.66
$3_{12} - 4_{13}$	37,123.87	37,123.84
$3_{13} - 4_{14}$	35,463.22	35,463.42
$3_{21} - 4_{22}$	36,326.98	36,326.99
$3_{22} - 4_{23}$	36,298.91	36,298.22
$3_{30} - 4_{31}$, $3_{31} - 4_{32}$	36,310.02	36,310.41, 36,310.35

*tolerance $\pm$ 0.05 megacycle

OPTICAL SPECTROSCOPY

Spectro-Isotopy (G. K. Werner, D. D. Smith, O. B. Rudolph)

An all-metal, gas circulating and leak system has been developed for gas purification in conjunction with hollow cathode operation. A unique feature of the system provides for simplified outgassing of the charcoal trap shown in Fig. 2. The charcoal is placed in two U-tubes that give a parallel circuit for gas flow and a series circuit for conduction of heat generated by inductive coupling. The winding from a 1-amp Variac is axially located at

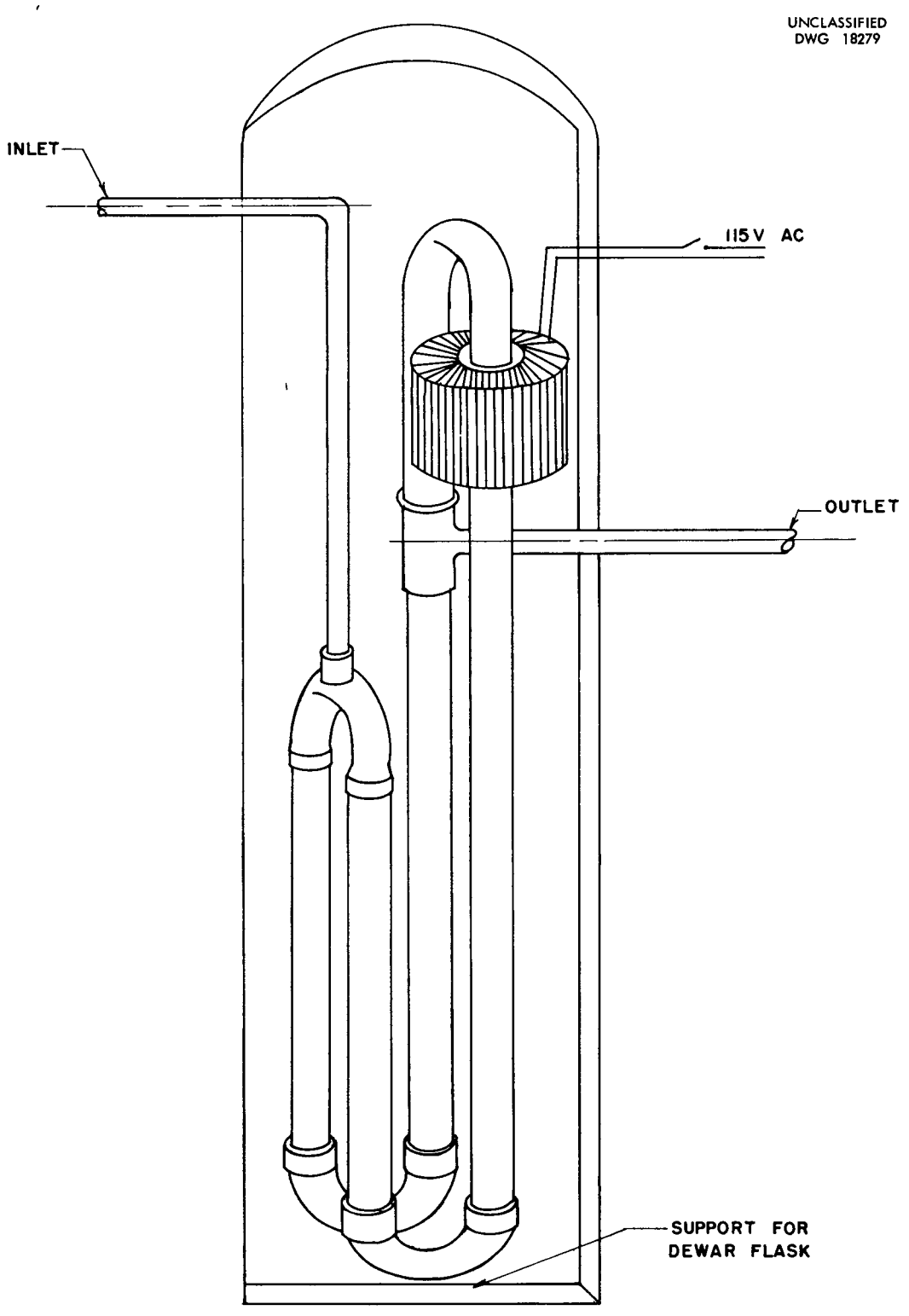

Fig. 2. Metal Charcoal Trap

the top of the copper tubing trap. The length of copper was designed to load the primary winding to 1 amp when the tubing is heated to just below the softening point of solder joints.

A turret-type hollow cathode source unit has also been developed for operation with numerous individual cathodes (see Fig. 3). The unit consists of a vacuum chamber approximately 8 in. in diameter that contains a rotatable aluminum disk which is drilled with a series of cathode cavities. The disk is indexed to different cathodes manually from the outside by means of a sylphon bellows and a ratchet arrangement.

Separated isotopes of boron (B^{10} and B^{11}) have been studied for applicability of the

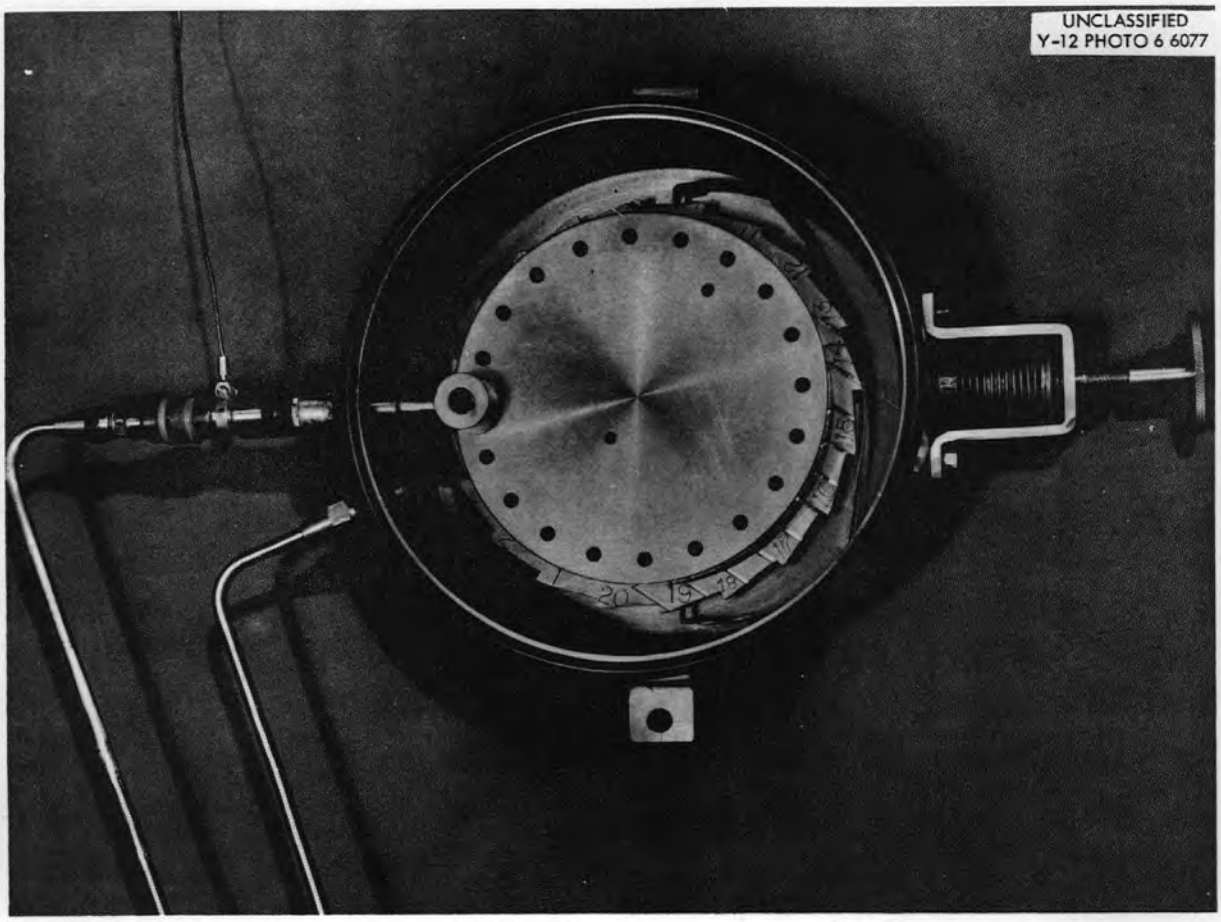

Fig. 3. Turret-Type Hollow Cathode Source With Cover Plate Removed

B II line of 3451 A to spectro-isotopic analysis. This line involves the transition $2s2p(^1P_1^o) - 2p^2(^1D_2)$, and the shift has been observed by Mrozowski[5] as $0.877 \pm 0.004\ cm^{-1}$ (0.104 A). This shift is smaller than that for lithium or uranium ($U^{238} - U^{235}$) isotope displacements but requires a Rayleigh resolution of only 30,000 because of the shorter wavelength. Excitation conditions of the spectrum of B II were not too favorable, but it is concluded that spectro-isotopic assay is feasible. Source conditions and other boron lines will be studied further.

High Resolution Spectroscopy (K. L. Vander Sluis)

The feasibility of a re-evaluation of the velocity of light by measurement of molecular transitions[6] in the optical region and in the microwave region to obtain $c = f/\sigma$ has been considered. Analysis of the band spectrum gives B_{000}, the ground state rotational constant, which has been determined directly in the microwave region and is precise to 0.3 part in 10^6. The infrared data are precise to about 13 parts in 10^6. If this band spectrum could be excited in emission, the precision of measurement should be improved by a factor of about 4. Emission methods investigated to date have resulted in dissociation of the molecule (HCN), and methods still being considered include flame spectra, quenching of resonance radiation, controlled electron beams, and high frequency.

Uranium-235 (J. R. McNally)

Previous investigations[7] established the nuclear spin of U^{235} to be very probably 5/2. Analysis of the hyperfine pattern of the 4515 A line of U^{235} leads to the following constants in the hyperfine splitting (the ratio A/B was incorrectly reported earlier):

$$\Gamma_F = \frac{A}{2} \quad C + BC\,(C + 1)$$

$$A = -0.010\ cm^{-1}$$

$$B = -0.00006\ cm^{-1}$$

Here, C is $F(F + 1) - I(I + 1) - J(J + 1)$. By using a $J_p J$ coupling model for the U II ion

(5) S. Mrozowski, Z. Physik 112, 223 (1939).

(6) D. H. Rank, R. P. Ruth, and K. L. Vander Sluis, J. Opt. Soc. Amer. 42, 693 (1952).

(7) G. L. Stukenbroeker and J. R. McNally, Jr., J. Opt. Soc. Amer. 40, 336 (1950).

and the 7s electron, the following is obtained:

$$a_s = -2\,(J_p + 1/2)\;A = 0.13\ \mathrm{cm}^{-1} = \frac{8}{3}\;\frac{R\alpha^2 Zi\;Z_o^2\,g_I}{n_o^3\,(1837)}\;\left(1 - \frac{d\sigma}{dn}\right)\,K(iZ_i).$$

The Fermi-Segré correction $(1 - \frac{d\sigma}{dn})$ is taken as 1.07, K as 3.39, $Z_i = Z = 92$, $Z_o = 2$, and by introduction of a nuclear volume correction of 28%, μ_I is computed as

$$\mu_I = 0.037\ n_o^3 \quad .$$

For the 7s electron, no information is available on its ionizing potential. However, the ionization potential for U I is estimated as about 4 volts by Kiess and coworkers;[8] so the potential of U II is estimated to be about 8 volts.[9] Thus, the approximate value of μ for U^{235} is

$$\mu_{235} = +\,0.66 \pm 0.2 \text{ nuclear magnetons.}$$

The electric quadrupole moment for the U^{235} nucleus may be calculated from Casimir's formula:[10]

$$Q = -\,\frac{8IJ(2I - 1)(2J - 1)\,Bhc}{3\,e^2 P} = +\,\frac{76}{P}$$

where $P = \overline{\sum \frac{1}{r_i^3}\;(3\cos^2\theta - 1)}$.

This summation is to be evaluated for those electrons that contribute to the quadrupole interaction with the nucleus for the electron state $M_J = J$; σ is a relativistic correction. Thus, the first consideration pertains to the single electron Dirac wave functions for the f^3ds configuration in the state $^6L_{11/2}$. The magnetic quantum numbers for the state $^6L_{11/2}$ are, by assuming LS coupling and using Breit's correlation rule, $M_L = 8$, $M_S = -5/2$, $M_J = 11/2$.

---

(8) C.C. Kiess, C.J. Humphreys, and D.D. Laun, J. Research NBS (RP-1729) 37, 1 (1946).

(9) Rough mass spectrometer ionizing potential studies by J. R. Sites indicate that both these ionizing potentials may be low.

(10) H. Casimir, "On the Interaction Between Atomic Nuclei and Electrons," Teyler's Tweede Genootschap, Haarlem, 1936.

The electron quantum numbers are then $(3^-, 2^-, 1^-, 2^-, 0^-)$. Evaluation of $\overline{(3\cos^2\theta - 1)}$ for spherical charge distributions such as the s electron and the $f^3(3^-, 2^-, 1^-)$ configuration gives $\overline{(3\cos^2\theta - 1)} = 0$. Thus, a first approximation to $\overline{(3\cos^2\theta - 1)}$ is given by the $3\cos^2\theta - 1$ averaged over the one electron Dirac wave function for $d_{3/2}$ which leads to -0.4. The presence of such an asymmetrical electron charge distribution will actually polarize the f^3s group and hence reduce the magnitude of this asymmetry. Casimir found for the ds electron configuration that $\overline{(3\cos^2\theta - 1)}$ averaged for the $^3D_1$ state $(2^-, 0^-)$ is -0.2. The f^3 group could reduce this still further, and its evaluation is under way.

The value of $\left(\overline{\frac{1}{r^3}}\right)$ for the $6d_{3/2}$ state is obtained approximately by the method of Casimir from the relation

$$\left(\frac{1}{r^3}\right) = \frac{\delta}{(2l+1)\,2.911\,Z_i} \quad \frac{1}{a_o^3}$$

where δ is the fine structure splitting of the 6d electron and from the energy level structure is judged to be of the order of 5000 cm^{-1}, $l = 2$, and $Z_i = 82$.[11] Substitution of these values gives $\left(\overline{\frac{1}{r^3}}\right) \cong 3 \times 10^{25}$. The relativistic correction σ for the $d_{3/2}$ state is taken from Kopfermann[12] as 1.6. This leads to:

$$Q \cong -4 \times 10^{-24}\ cm^2\ (d_{3/2}) \quad ,$$

or

$$Q \cong -9 \times 10^{-24}\ cm^2\ ds(^3D_1) \quad .$$

New experimental data are being obtained, but it is believed that the approximations in the theoretical treatment are adequate at present. Thus, approximately $Q = -8 \times 10^{-24}\ cm^2$ is chosen pending further experimental data. This gives a flattened nucleus for U^{235} with a semiaxis difference in the nuclear charge distribution of

$$b - a = \frac{5Q}{2Z(b+a)} \cong 10^{-13}\ cm, \text{ using } b \cong a \cong 10^{-12}\ cm.$$

---

(11) Casimir recommends that Z_i be reduced by 10 for d electrons.

(12) H. Kopfermann, "Kernmomente," Edwards Brothers, Inc., Ann Arbor, Michigan (1945).

A theoretical value for the quadrupole moment of U^{235} may be calculated from the spheroidal nuclear model including strong spin orbit coupling. This is an extension of the Feenberg-Hammack[13] treatment by Van Wageningen and de Boer.[14] The quadrupole moment is calculated as

$$Q_o = F(A,Z)\,(-1)^p \left[\frac{1}{3} - \frac{m_I^2}{I(I+1)}\right]$$

where F(A, Z) for uranium is estimated at 18×10^{-24} cm^2, m_I is the magnetic quantum number, I is the nuclear spin, and p is unity for an unbalanced nucleon and zero for a nucleon hole. Q_o is computed as -11×10^{-24} cm^2 and correcting by $\frac{I(2I-1)}{(I+1)(2I+3)} = 0.357$, the "effective" moment[15] becomes -4×10^{-24} cm^2, which compares favorably with the experimental value.

Echelle Instrumentation (P. M. Griffin)

Methods for superimposing a fiduciary mark or marks on echelle spectograms to facilitate identification and/or accurate wavelength measurement of spectrum lines have been worked out. One method, applicable when the spectrum involved is always accompanied by a high background or where no harm is done by deliberately superimposing a continuum on the spectrum, involves the producing of a shadow on the plate by an extremely fine opaque strip located in the plane of the vertical slit. A single glass fiber mounted perpendicular to the vertical slit and passing through the optical axis of the prism instrument has proved to be satisfactory if the magnification of the spectrograph and the Hartman constants have previously been determined. For the calculation of these quantities for a given region, a reticle with six etched horizontal lines is placed in contact with the slit, and a spectrum containing secondary wavelength standards and a continuum is photographed. A second method to be used when the procedure outlined above is not applicable has been investigated. Here, a very narrow horizontal slit is mounted at the vertical slit, white light is projected on it, and its image is superimposed on the spectrogram. This method requires the use of combinations of filters in order to obtain a fiduciary mark of uniform density on the

---

(13) E. Feenberg and K. Hammack, Phys. Rev. 81, 285 (1951).

(14) R. Van Wageningen and J. de Boer, Physica 18, 369 (1952).

(15) A. Bohr, Phys. Rev. 81, 134 (1951).

plate. These filters must correct for variations in spectral response of the photographic emulsions and the frequency distribution of the radiation from the source. Investigation of this method is still in progress.

Detection of Rare Earths in Uranium (P. M. Griffin, G. L. Stukenbroeker[16])

A preliminary survey of the problem of detecting rare earth impurities in uranium by using an echelle spectrograph has been carried out. The results indicate that the high dispersion, resolving power, and speed of the instrument make possible the detection of rare earths of very low concentrations without preliminary chemical treatment of the samples to separate the impurities from the gross quantities of uranium (see Fig. 4). It appears that the low limit of detection will be set by the degree of excitation and source broadening rather than by instrumental limitations. In the experiments to date, Yb was detected when present at a concentration of 10 ppm in a 3-mg sample of uranium. Gd and La were detected at concentrations down to 50 ppm in the same size and type of sample. These results could undoubtedly be improved if the source conditions were optimized. The samples were burned at 5 amp d.c. in 1/8-in. graphite electrodes.

Detection of Lines from Uranium Isotopes Present at Low Concentrations (P. M. Griffin)

A uranium sample containing four different isotopes was excited by a direct-current arc, and its spectrum was recorded by use of the echelle spectrograph. The isotopic composition of the sample was as follows:

U^{234}	1.43%
U^{235}	89.34%
U^{236}	0.84%
U^{238}	8.39%

The relative positions and intensities of the components in the 4244 A line from this uranium sample should appear as shown in Fig. 4.

No serious difficulty was encountered in detecting the U^{238}, U^{236}, and U^{235} components in the line. However, the U^{234} component appeared at the same position as a satellite of the U^{235} component. It has been necessary to make a quantitative survey of the relative intensities of the spurious structures arising from single lines. With this information, it should be

[16] Now with National Lead Co. of Ohio, Fernald, Ohio.

possible to detect the presence of U^{234} by measuring the change in relative intensities of the U^{235} component and its satellite.

Zeeman Spectroscopy (P. M. Griffin, O. C. Yonts)

Work has continued on the investigation of the Zeeman spectrum of uranium. Experimental techniques (including those involved in source design, preparation and choice of samples, excitation of samples, operation of the spectrograph, and reduction of data), which have proved to be quite adequate, have been developed and applied. The most significant

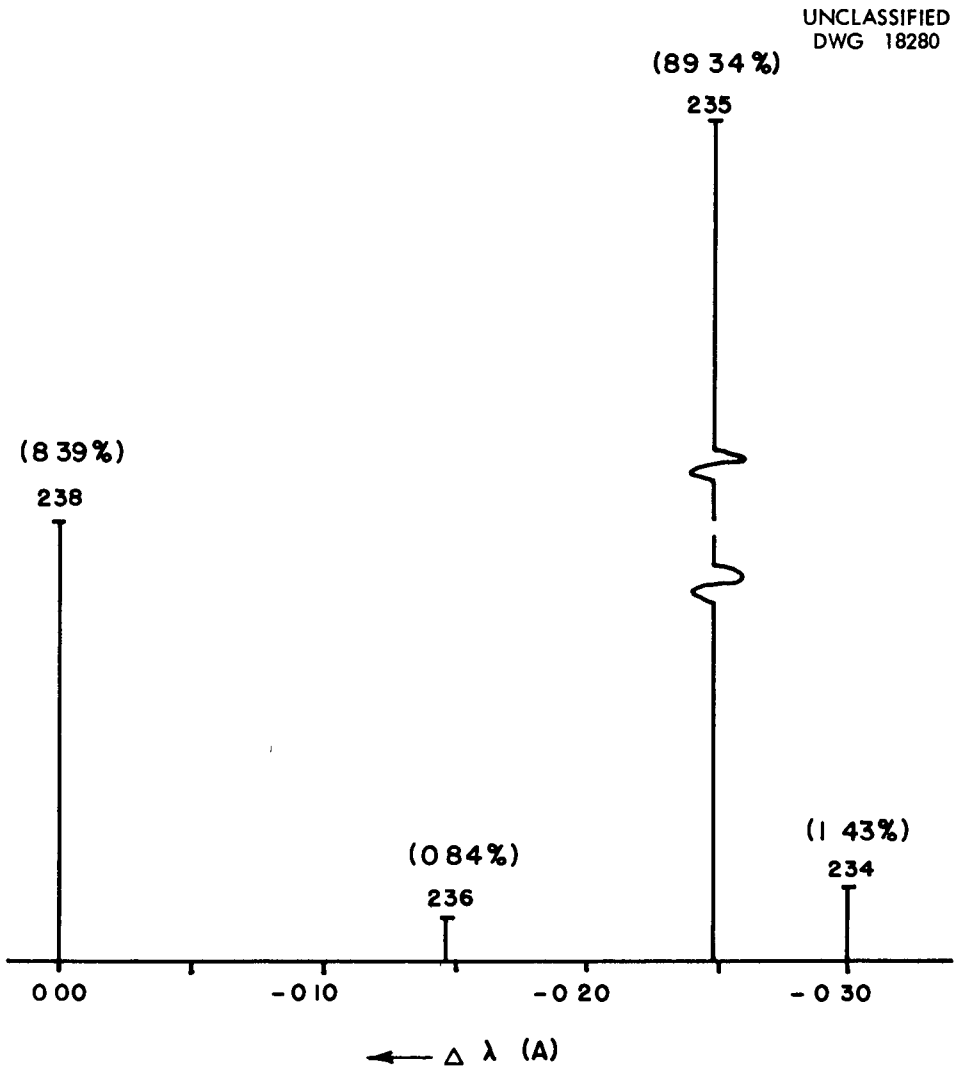

Fig. 4. Isotope Structure in the 4244 A Line of Uranium From Sample of Known Composition

improvement has been made in the type of source. It has been found that a direct-current arc between uranium metal electrodes, in an atmosphere of helium, produces an extremely intense source of uranium spectra with sufficiently sharp lines. In addition, the spectrum is free of molecular bands and the high background from incandescent graphite particles in the arc. Exposure times are reduced by a factor of 5 or more from those required in using previous sources. Zeeman patterns of lines previously "unworked" because of low line intensities and poor sensitivity of photographic emulsions in the red end of the spectrum should be much more easily measured.

A Phillips ion gage (PIG) type of light source has been tested in magnetic fields of the order of 8000 gauss. The field-free region between a double cathode may provide a high-intensity, sharp-line, light source for use in Zeeman studies, the line sharpness matching the high resolution of the echelle spectrograph used in this work. It is possible that internal electric fields developed by plasma oscillations or ionic conditions in the discharge may vitiate this approach. If productive of sharp lines, further tests will be made to explore the possibility of sputtering small quantities of material from the electrodes into the discharge.

Spectrochemistry (J. A. Norris, Z. Combs, J. J. Mundzak, C. T. Pepper, M. R. Skidmore)

The Spectrochemical Laboratory has been transferred to a new location. The time involved in making the transfer (about one month) resulted in a reduction in sampling. Despite this handicap, a total of 363 samples was spectrochemically analyzed for a total of 5658 individual element determinations.

Numerous new standards were prepared during this quarter: (a) 0.1 to 1000 ppm lithium in sodium chloride; (b) 10 to 1000 ppm Cu, Na, Zn, Ni, Al, Fe, Pb, and Mn in magnesium oxide; and (c) 0.01 to 4% Ba, Sr, Ca, Na, Al, K, Fe, Mg, Zn, Cr, Cu, Mn, Mo, Ni, Pb, Si, Sn, and V in sulfate matrix.

X-RAY STUDIES

X-Ray Absorption (W. F. Peed, W. B. Wright, Jr.,[17] H. W. Dunn)

Additional investigations have been made of uranium concentration determinations in miscellaneous solutions by means of x-ray absorption measurements at the L_{III} uranium absorption edge. The concentration range 40,000 to 100 ppm of uranium in solution has been investigated successfully by using a 1-cm absorption path. Measurements on a wide variety of

[17] On loan, Y-12 Analytical Laboratory.

salvage-type samples compare favorably with gravimetric chemical analyses and can be carried out at a rate of better than one analysis an hour. Table 6 summarizes data obtained on 16 salvage samples. One sample that contained large amounts of undissolved crystals and other particles gave a discrepancy of about 11% between the two methods of analysis. These 16 samples represented a wide variety of salvage samples. Results in the 100- to 1000-ppm range have been obtained by using a 2.5-cm cell with improved precision and accuracy over the 1-cm cell. New cell designs have also been investigated.

Table 6. Comparison of X-Ray Absorption and Gravimetric Methods of Analyses for Uranium

Number of Samples	Concentration Range (ppm)	Average Bias (%) X ray minus Gravimetric	Standard Deviation (%) X ray vs. Gravimetric
4	<2,000	+ 0.1	3.1
4	2,000 to 10,000	+ 0.7	1.2
8	>10,000	+ 2.3	2.8

X-Ray Diffraction (H. W. Dunn)

Approximately 275 samples have been analyzed by x-ray diffraction for compound identification during this quarter. These samples usually involved phase studies, identification of corrosion products, identification of deposits, and chemical reaction products.

ARE experiments involving sodium, potassium, and lithium fluorides circulating in loops resulted in deposition of material as well as container corrosion. X-ray studies revealed a selective leaching of chromium from the stainless steel, which resulted in general corrosion and also showed conclusively the formation of alkali fluochromate deposits. Phase studies on these fluochromates have produced x-ray diffraction data on numerous compounds and solid solutions.

Considerable preliminary work has been done on the recording of x-ray diffraction data of various uranyl phosphates. The lack of literature information on these compounds will be overcome when this study incorporates higher precision data on intensities and wavelengths.

Miscellaneous Experiments (O. C. Yonts)

A study of operating conditions used in calutron and similar arc ion sources indicated that improvements might be introduced. In particular, cathode (K) operation well above saturation results in serious erosion of the cathode as a result of heavy positive ion bombardment. A series of experiments has been run to compare K life, output ion currents, and other

parameters in a standard calutron for a "diode-operation" ("D-O") vs. normal operation techniques. In this D-O operation, the cathode is restricted to emission just below saturation, and the arc voltage drop approximates the ionization potential of the gas. Control was obtained by inserting appropriate resistance in the cathode circuit.

Figure 5 shows the effects of erosion and evaporation from two 140-mil filaments operated for 16 hr in $FeCl_2$. Arc voltage in the normal case was 150 volts, arc current 2.0 amp; in D-O operation, there were 20 volts and 2.3 amp. Filament primary currents were 3.8 to 2.6 amp and 4.3 to 3.6 amp, respectively. An extension of these experiments showed that filament life, when operation was below saturation (45 volts for $SiCl_4$ charge material), was increased by a factor of 4 but that ion output decreased by 2. Operating conditions intermediate between D-O operation and normal operation gave filament life approximately three times the

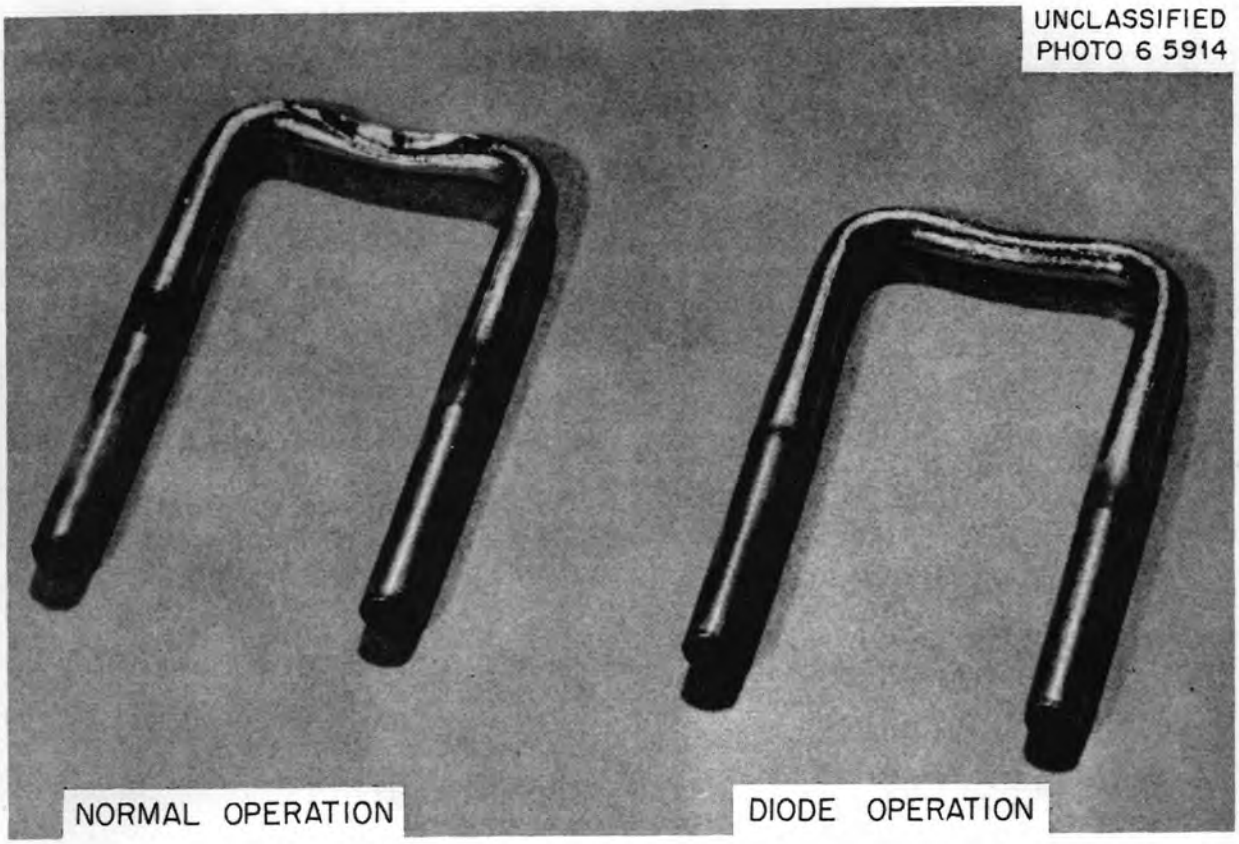

Fig. 5. 140-mil Filament after 16 hr in $FeCl_2$.

normal case with comparable output. Present experiments are continuing with this modified D-O operation and the use of 170-mil filaments.

The method of operation is applicable to high-intensity ion sources used in both calutrons and cyclotrons and should effect a useful increase in filament efficiency.

Reports and Papers in Preparation

1. P. M. Griffin, R. A. Loring,[18] and J. R. McNally, Jr., "The Use of an Echelle Spectrograph in the Investigation of Zeeman Spectra."
2. H. E. Walchli, "Table of Nuclear Magnetic and Mechanical Moments" (to be issued as ORNL-1469).
3. J. R. McNally, Jr. and G. L. Stukenbroeker, "Hyperfine Structure Studies of U^{235}."
4. W. F. Peed, W. B. Wright, Jr., and G. L. Rogosa,[19] "Application of X-Ray Fluorescence to Analysis of Zirconium in Uranium" (to be issued as ORNL-1419).

Reports Submitted for Publication

1. E. J. Spitzer and D. D. Smith, "Spectrochemical Analysis of Zirconium Oxide," to be published in Appl. Spectroscopy.
2. G. K. Werner, "Semi-Automatic Recording of Wavelength Data," to be published in Rev. Sci. Instr.
3. G. L. Stukenbroeker and J. R. McNally, Jr., "Isotope Shifts in Thorium - Th^{230} and Th^{232}," to be published in the J. Opt. Soc. Amer.
4. H. W. Morgan and J. H. Goldstein, "Microwave Spectrum of Vinylacetylene," to be published in the J. Chem. Phys.

Reports Published and Papers Presented

1. W. F. Peed, L. E. Burkhart, R. A. Staniforth, and L. G. Fauble, joint ORNL-Mound Laboratory report, "The X-Ray Spectrum of Polonium - Atomic Number 84," ORNL-1317 (Dec. 1, 1952).

---

[18] Dr. Loring, Research Participant at ORNL during 1952 and Head of the Department of Physics at the University of Louisville, died December 31, 1952.

[19] Research Participant, Florida State University, Tallahassee, Florida.

2. H.W.Morgan and J.H.Goldstein, "Chemical Aspects of Microwave Spectroscopy," paper presented at the Southwest Regional Meeting of the American Chemical Society, Little Rock, Arkansas, December 4-6, 1952.
3. D. D. Smith, "Isotope Spectrum Shift Data on Uranium Spectrum Lines," ORNL-1412.
4. J. R. McNally, Jr., G. K. Werner, and D. D. Smith, "Further Investigations of Spectro-Isotopic Analysis of Lithium," paper presented to Optical Society of America, October 1952 (see J. Opt. Soc. Amer. 42, 870A (1952)).
5. P. M. Griffin, R. A. Loring, and J. R. McNally, Jr., "The Use of an Echelle Spectrograph in the Investigation of Zeeman Spectra," paper presented to Optical Society of America, October 1952 (see J. Opt. Soc. Amer. 42, 880A (1952)).
6. J. R. McNally, Jr., "Spectro-Isotopy· A New Field of Spectroscopic Endeavor," paper presented to Southern Association of Spectrographers, October 18, 1952.
7. J. A. Norris and C. E. Pepper, "Quantitative Spectrochemical Analysis of Rare Earth Mixtures," paper presented to Southern Association of Spectrographers, October 18, 1952.
8. P. M. Griffin, "The Design and Performance of an Echelle Spectrograph," paper presented to Southern Association of Spectrographers, October 18, 1952.

MASS SPECTROMETER LABORATORY

Russell Baldock, Department Head

INTRODUCTION

Experiments have been completed that firmly establish the mechanism of formation of uranium pentafluoride (UF_5) as observed when untreated uranium tetrafluoride (UF_4) is volatilized in the mass spectrometer. Isotopic analyses were completed on a sample of enriched Sm^{144} that had been irradiated for about a year in the Chalk River reactor. Two noteworthy changes in the isotopic abundances were found. In preparation for the future analyses of radioactive samples, a technique of evaporating small samples inside the presently used high-temperature ovens was developed. A preliminary investigation of the molecular weight of luciferin has been made. A method for isotopic analysis of lithium was developed with the use of the Li_2Cl^+ ions formed when lithium chloride is heated in the mass spectrometer. The new General Electric mass spectrometer has yielded satisfactory data for hydrogen-deuterium equilibration studies.

HIGH-TEMPERATURE ANALYSES

Uranium Tetrafluoride Analysis (J. R. Sites, L. O. Gilpatrick)

A method of analyzing UF_4 for UO_2F_2 that consisted of making a time integrated estimate of the uranium pentafluoride (UF_5) produced in a UF_4 sample during examination in the mass spectrometer was perfected during the last quarter.[20] During this quarter, additional experiments were performed to firmly establish the mechanism of formation of UF_5 as observed when untreated uranium tetrafluoride (UF_4) is volatilized in the mass spectrometer. In order to carry out this part of the investigations, some UF_4 enriched in the U^{235} isotope was used. First, a study was made of $U^{235}F_4$ that had been baked to remove the contaminating source of UF_5 ions. This baked material gave a pure $U^{235}F_4$ mass cracking pattern. For the second run, a small amount (about 10%) of natural uranyl fluoride($U^{238}O_2F_2$) was physically mixed with some of the baked $U^{235}F_4$. When uranium ions first appeared, the U^{238} was in a typical UF_5 pattern, and the U^{235} was in a pattern that indicated a mixture of $U^{235}F_4$ and $U^{235}F_5$. However, the U^{235} pattern changed to a UF_5 pattern within a few minutes. After holding the oven at 800°C for some time, the $U^{238}O_2F_2$ was exhausted, and the U^{235} and U^{238} patterns changed to UF_4 pattern, with the U^{238+} about 20% of the U^{235+}. Upon raising the temperature to 1300°C, uranium oxides, oxyfluorides, and fluorides were present, with the U^{238+} about 40% of the U^{235+}. The mass cracking patterns indicate the equilibration of the uranium in $U^{235}F_4$ and $U^{238}O_2F_2$, with the $U^{235}F_4$ taking up an extra fluorine from the $U^{238}O_2F_2$ to give $U^{235}F_5^+$, and with the appearance of $U^{235}O^+$ ions formed from UO_2. Thus the origin of the UF_5 found during mass spectrometer examination was determined by observing the isotopic distribution of the products. The following mechanism is reasonable for the formation of the UF_5 previously observed in UF_4 samples at about 550°C:

$$2UF_4 + UO_2F_2 \longrightarrow UO_2 + UF_5$$

Fission Products (J. R. Sites)

A continuation of the samarium investigation[20] was made. Two runs were completed using samarium nitrate ($Sm(NO_3)_3$) in which the Sm^{144} isotope had been enriched from the 3.13% of natural Sm to 72.13%. The first study was a check on the isotopic abundances of

---

[20] Stable Isotopes Research and Production Division Quar. Prog. Rep. July 1 to Sept. 30, 1952, ORNL-1434, p. 34-44.

1434

this separated sample as reported for the stable isotope inventory.[21] These compared favorably except for Sm^{147}, the abundance of which was found to be about 11% of Sm^{144} instead of the 10% previously reported. In addition, a small amount of europium was present.

A sample of the Sm^{144} enriched material had been irradiated for about a year in the Chalk River reactor for study by G. Parker of the ORNL Chemistry Division. The charge material for the second run was a portion of this irradiated sample that had been chemically separated from any contaminating elements. Two noteworthy changes in the isotopic abundances were noted: the appearance of a small Sm^{145} peak with an intensity of about 0.07% of the Sm^{144}, and the complete disappearance of Sm^{149} with a corresponding increase of Sm^{150}. In addition, a very small amount of Sm^{151} was present. These changes may be explained in terms of their neutron absorption cross sections.

In preparation for the future analysis of more intensely radioactive samples, a technique of evaporating a small fraction of a cubic centimeter of solution inside the presently used high-temperature ovens was developed. This involves the use of a low power microscope and positively controlled, finely tipped, micropipets. A small sample of potassium pertechnetate ($KTcO_4$) was used to check the method, with a few tenths of a milligram of crystals being deposited in the oven. At about 400°C, ions of $KTcO_4^+$, Tc^+, TcO^+, and TcO_2^+ were present.

Molecular Weight of Luciferin (J. R. Sites)

B. L. Strehler of the Biology Division separated a few milligrams of luciferin from 100,000 firefly tails[22] and wished to determine its molecular weight. As a preliminary check on examining such components in the mass spectrometer, a run was made with riboflavin, which is possibly similar in structure to luciferin. The mass cracking pattern of riboflavin obtained at 300°C showed characteristic peaks up to and including the parent peak. The most intense peaks were those of the parent minus one or more of the side chains, leaving lumichrome and lumiflavin. Peaks that were due to ions of these side chain fragments were also present. Nearly all the prominent peaks could be identified by comparison with the structural formula.

---

[21] C. P. Keim, C. E. Normand, and B. S. Weaver, "Electromagnetically Enriched Isotopes," Inventory, October 31, 1952, ORNL-1428.

[22] B. L. Strehler and W. D. McElroy, "Purification of Firefly Luciferin," J. Cellular Comp. Physiol. 34, 457 (1949).

A study was made of luciferesceine, a compound also obtained from fireflies,[23] the molecular weight of which is known approximately. Again a characteristic mass cracking pattern was obtained.

The luciferin mass cracking pattern had certain similarities to luciferesceine, and interpretation studies on the data are being made by B. L. Strehler.

Alkali Metals (J. R. Sites)

In the stable isotope research and production section, a number of the lithium runs gave poor operations because of a material buildup in the ion accelerating slits. Several studies of this material confirmed suspicions that excess free chlorine from the lithium chloride (LiCl) charge material was picking up some of the metal constituents of the source parts.

In examining LiCl, it was noticed that the Li_2Cl^+ ions were the most abundant. A method for analyzing the enrichment of Li^6 up to 20 mole % has been worked out by using the ratio mass 48 $(Li^6\ Li^7\ Cl^{35})^+$ to mass 51 $(Li_2^7\ Cl^{37})^+$ and by assuming the accepted ratio of the chlorine isotopes.

In one run with a mixture of sodium chloride, potassium chloride, and lithium chloride, ions were obtained that corresponded to all possible pairs of lithium, sodium, and potassium with one or two chlorine atoms. The groups analogous to $NaKCl^+$ were the most intense in each pattern.

Stainless Steel (J. R. Sites)

Stainless steel studies[24] were continued, and an investigation was made of the mass cracking pattern of chromium oxide (Cr_2O_3) in a platinum high-temperature oven. Chromium (Cr^+) ions appeared at about 1300°C and were very intense at 1500°C, with both the CrO^+ and CrO_2^+ ions only about 0.5% of the elemental ions. Also appearing at this temperature were ions, thermal, as well as those formed by electron impact, of calcium, cobalt, and strontium.

---

[23] B. L. Strehler, "The Isolation and Properties of Firefly Luciferesceine," Arch. Biochem. and Biophys. 32, 397 (1951).

[24] "Stable Isotopes Research and Production Division Quar. Prog. Rep. July 1 to Sept. 30, 1952," ORNL-1434.

ROOM TEMPERATURE ANALYSES

Hydrogen Equilibration (J. R. Walton, G. A. Consolazio)

The equilibriums involved in the concentrations of HD and the analysis of HD content of a $H_2 + D_2$ gas mixture depend upon exchange reactions. Urey and Rittenburg[25] were the first to treat theoretically the equilibriums involved in such chemical reactions. The new General Electric mass spectrometer has been used to determine its suitability for investigating such reactions.

Two samples composed of approximately 50-50% $H_2 + D_2$ were obtained from E. H. Taylor and J. A. Wethington, Jr., ORNL Chemistry Division. These samples were studied in a mass spectrometer of the Nier type, and an effort was made to determine the equilibrium constants for the $H_2 + D_2 \rightleftarrows 2HD$ reaction.

A tungsten filament in the form of a spiral extended through the center of each glass sample container. This filament was supported by heavier leads that passed through glass-metal seals to the outside. A low current (1 amp) was passed through the filament and was increased by small increments until the filament became incandescent. After each increase in current, an investigation was made of the resulting mixture.

As the current was increased, the mass 2 (H_2^+) and mass 4 (D_2^+) peak heights decreased slowly, and the mass 3 (HD^+) peak height increased at a corresponding rate. At 5.5 amp, the filament in the number one sample was dull red; there was a sudden, large increase of mass 3 peak height and a corresponding sudden decrease in the mass 2 and mass 4 peak heights. Little change was noted after 5.9 amp was reached. Similar results were gained from the second sample.

Equilibrium constants K were determined for the two mixtures from

$$K = \frac{(HD)^2}{H_2D_2}$$

where

HD is the peak height in arbitrary units at mass 3;

H_2 and D_2 are the peak heights in arbitrary units at mass 2 and mass 4, respectively.

The data obtained for the two mixtures are shown in Table 7.

---

[25] H. C. Urey and D. Rittenburg, J. Chem. Phys. 1, 137 (1933).

Table 7. Mass Spectrometer Equilibration of $H_2 + D_2$

Sample No. 1		Sample No. 2	
Current (amp)	Equilibrium Constant K	Current (amp)	Equilibrium Constant K
0	2.86×10^{-4}	0	2.56×10^{-4}
1	3.26×10^{-4}	4	2.49×10^{-4}
2	3.11×10^{-4}	5	3.47×10^{-4}
3	2.96×10^{-4}	6	8.72×10^{-2}
5.5	6.20×10^{-3}	7	3.89
5.9	3.64	8	4.08
6.5	3.97		
8.0	3.91		

The equilibrium constants as calculated from partition functions for H_2, D_2, and HD molecules that are listed in Table 8 were obtained from Kirshenbaum's work.[26]

Table 8. Calculated Equilibrium Constants

Temperature (°C)	$K_1 = \frac{Q^2_{HD}}{QH_2\ QD_2}$
0	3.17
25	3.26
50	3.33
75	3.39
100	3.44
125	3.48

Uranium (J. R. Sites)

Natural uranium filings were run in a tantalum high-temperature oven to check the relative appearance potentials of U^+ and U^{++}. At 1370°C, U^+, UO^+, and small UO_2^+ ions appeared. Data taken at 1900 and 2100°C indicated that the difference in appearance potentials is around 10 to 11 volts.

---

(26) I. Kirshenbaum, "Physical Properties and Analysis of Heavy Water," NNES, MPTS, Div. III - Vol. 4A.

Rhodium (J. R. Sites)

Some very pure rhodium powder was investigated in a tantalum oven. In the two runs made, one oven burned out at approximately 1400°C and the other at 1560°C, even though rhodium melts at 1950°C and tantalum at 2700°C. The filaments were completely corroded through by the alloying of the Rh and Ta. A small Rh^{103+} peak appeared just before the second filament burned out.

Hydrogen-Deuterium Mass Spectrometer (W. R. Rathkamp)

Considerable effort has been expended in the construction of a hydrogen-deuterium mass spectrometer. Some of the basic components for a spectrometer of this type, such as mass 2/3 and mass 3/4 tubes and the electronic equipment to operate them, were obtained from X-10. Unfortunately, most of this equipment proved to be in poor condition, and it was decided to redesign both the sample handling system and the spectrometer tube vacuum system. This was done, and those two vacuum systems were built into an aluminum frame. A rack panel was built onto the frame at the right end to hold the necessary electronics.

The systems are now pumping and being checked for leaks. The reworking of the electronic equipment has not yet been completed.

LABORATORY EQUIPMENT

New Electrical Equipment (G. F. Wells)

Development of a mass spectrometer ion source gate for the accurate measurement of ionization potentials as described by R. E. Fox et al.[27] has begun. The design is an adaptation of circuitry developed by D. J. Grove and A. O. McCoubrey[28] at the Westinghouse Research Laboratories.

A 10-kv RF-controlled d-c power supply was completed and installed in mass spectrometer A (MS-A) to improve resolution and to diminish mass discrimination effects that result from any small errors in alignment of the electrostatic focusing fields.

The first of a group of 1:1 isolation transformers has been delivered from the Central Transformer Co. for acceptance tests. These transformers are to enable full use of the 10-kv RF

---

[27] R. E. Fox et al., "Ionization Potentials and Probabilities Using a Mass Spectrometer," Phys. Rev. 84, 859 (1951).

[28] D. J. Grove and A. O. McCoubrey, "Double Square Wave Generator," Westinghouse Res. Lab., Scientific Paper 1655 (Apr. 16, 1952).

power supply. This power supply has been limited to 2-kv operation by the present isolation transformer available.

Test circuitry[29] for the acceptance tests of the high voltage isolation transformer was completed. Tests showed the transformer to have 2000 megohms internal resistance winding to winding, winding to case, and winding to core, and 20 $\pm$ mv corona discharge upon application of 15-kv d-c potential to the primary. This satisfactorily passes the acceptance requirements of 500 megohms and 100 mv or less corona.

A portable vacuum dolly for study of new designs of various mass spectrometer source and receiver components is nearing completion.

A battery power supply designed by W. R. Rathkamp for heating the high temperature source ovens has been installed and tested on mass spectrometer A (the original 8-in. radius machine). The unit is enclosed and insulated for 10 kv and comprises a battery supply, a charging circuit, and necessary controls and meters.

Stainless Steel Mass Analyzer Tube (L. O. Gilpatrick)

The newly designed metal mass analyzer tube was extensively tested for vacuum leaks and pump-down characteristics. Initial tests with a small glass vacuum system showed that a larger pumping capacity was essential for testing the empty tube. A metal vacuum system was assembled which gave an effective pumping speed of about 12 liters/sec at the tube entrance (see Fig. 6). This vacuum system, after extensive leak testing, produced a base pressure on the tube of 1×10^{-6} mm Hg. Teflon closure gaskets worked well, but several leaks appeared at the electrode entries where soft copper gaskets were used. As a result of this testing experience, the permanent vacuum system for this tube was designed to have a pumping speed of approximately 25 liters/sec at the tube.

---

[29] US Navy Letter BuShips 16T30 (INT) 71-4942 - Jan-T-27 (Sept. 27, 1945).

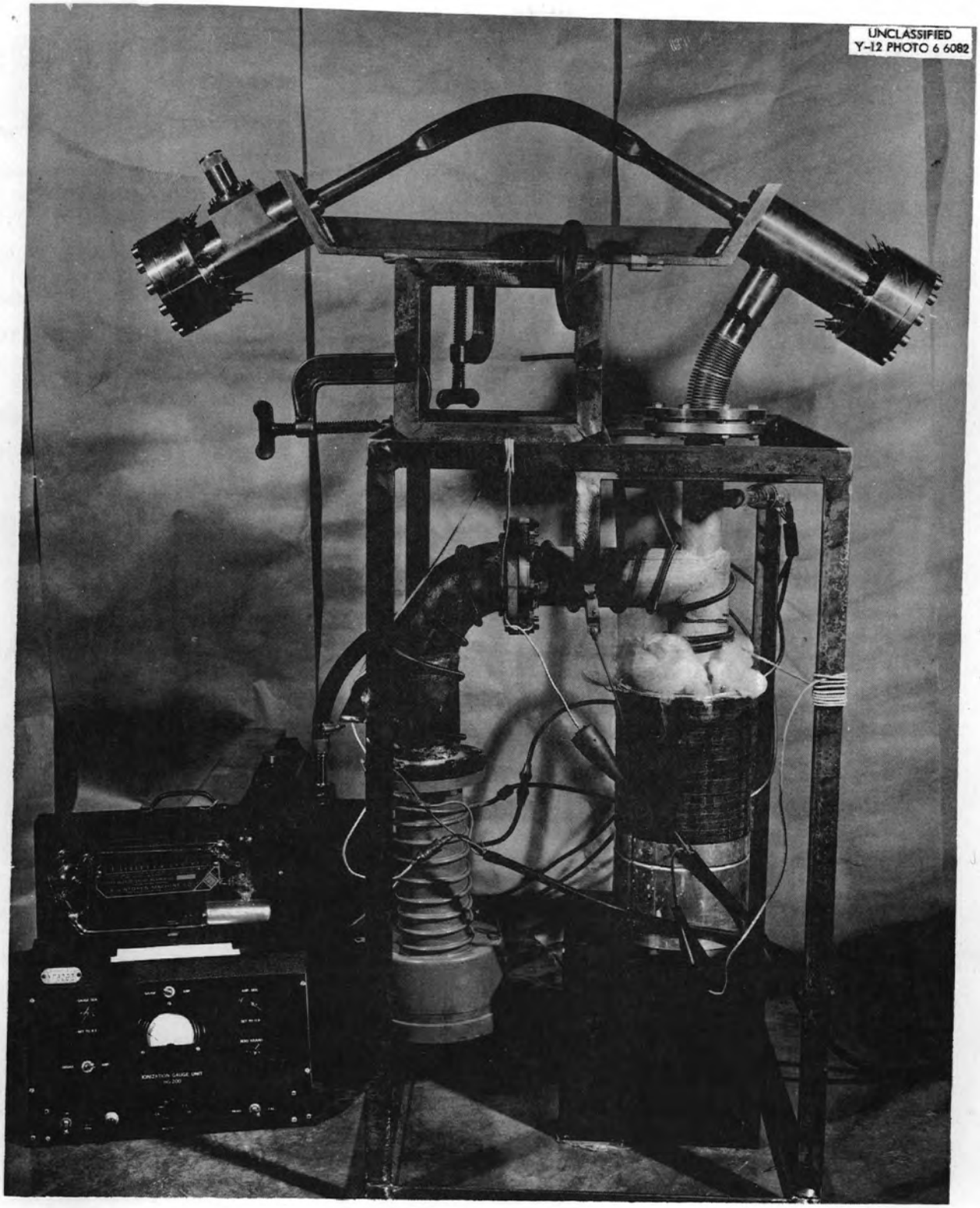

Fig. 6. Metal Vacuum System and Tube