[redacted]

[redacted]

ORNL
MASTER COPY

AEC RESEARCH AND DEVELOPMENT REPORT

ORNL-1423
Progress

ANALYTICAL CHEMISTRY DIVISION

QUARTERLY PROGRESS REPORT

FOR PERIOD ENDING SEPTEMBER 26, 1952

DECLASSIFIED By Authority Of: AEC 9/21/1970
F. Evans
For E. J. Sing, Director
Laboratory Records Dept
ORNL

LABORATORY RECORDS 1954

CLASSIFICATION CANCELLED
(DOE Review Guide)
DATE JUL 12 1979
Classification Officer
OAK RIDGE NATIONAL LABORATORY
AUTHORITY DELEGATED BY ERDA 8-15-77

THIS DOCUMENT WAS PROPERLY DECLASSIFIED
AND IS EXEMPT FROM DOE 1979 REVIEW ORDER
PER DOE LETTER, 10-16-79, R.T. DUFF, OOC

R. S. BAKER, ORNL/CO 12/22/80
INITIALS DATE

OAK RIDGE NATIONAL LABORATORY
OPERATED BY
CARBIDE AND CARBON CHEMICALS COMPANY
A DIVISION OF UNION CARBIDE AND CARBON CORPORATION

UCC

POST OFFICE BOX P
OAK RIDGE, TENNESSEE

[redacted]

[redacted]

[redacted]

[redacted]

[redacted]

CENTRAL RESEARCH LIBRARY
DOCUMENT COLLECTION

MARTIN MARIETTA ENERGY SYSTEMS LIBRARIES
3 4456 0360621 1

ORNL-1423
Progress

DECLASSIFIED
Classification Cancelled
By Authority Of: [illegible] 9.24.70
By: [illegible] 2.10.71

AEC RESEARCH AND DEVELOPMENT REPORT

ANALYTICAL CHEMISTRY DIVISION

LABORATORY RECORDS
1954

QUARTERLY PROGRESS REPORT

FOR PERIOD ENDING SEPTEMBER 26, 1952

CENTRAL RESEARCH LIBRARY
DOCUMENT COLLECTION
LIBRARY LOAN COPY
DO NOT TRANSFER TO ANOTHER PERSON
If you wish someone else to see this document, send in name with document and the library will arrange a loan.

OAK RIDGE NATIONAL LABORATORY
U.S. ATOMIC ENERGY COMMISSION

CLASSIFICATION CANCELLED
Chris Poe ORNL Co 10/31/2013
DD Signature Date
Single review of CCRP-declassified documents was authorized by DOE Office of Declassification memo of August 22, 1994.

OAK RIDGE N

CARBIDE AND CA

A DIVISION OF UNION

PO

OAK

[redacted]

[redacted]

[redacted]

ORNL-1423
This document consists of 72 pages.
Copy 39 of 143 copies. Series A.

Contract No. W-7405-eng-26

ANALYTICAL CHEMISTRY DIVISION

QUARTERLY PROGRESS REPORT

For Period Ending September 26, 1952

M. T. Kelley, Director
C. D. Susano, Associate Director

DATE ISSUED:

FEB 11 1953

OAK RIDGE NATIONAL LABORATORY
Operated by
CARBIDE AND CARBON CHEMICALS COMPANY
A Division of Union Carbide and Carbon Corporation
Post Office Box P
Oak Ridge, Tennessee

[redacted]

[redacted]

[redacted]

INTERNAL DISTRIBUTION

1. G. T. Felbeck (C&CCC)
2. Biology Library
3. Health Physics Library
4. Reactor Experimental Engineering Library
5-6. Central Research Library
7-13. Central Files
14. C. E. Center
15. C. E. Larson
16. W. B. Humes (K-25)
17. L. B. Emlet (Y-12)
18. A. M. Weinberg
19. J. A. Swartout
20. E. D. Shipley
21. E. J. Murphy
22. F. C. VonderLage
23. M. T. Kelley
24. E. H. Taylor
25. A. H. Snell
26. F. L. Steahly
27. S. C. Lind
28. R. C. Briant
29. J. S. Felton
30. C. E. Winters
31. A. Hollaender
32. K. Z. Morgan
33. C. P. Keim
34. G. H. Clewett
35. A. S. Householder
36. D. W. Cardwell
37. E. M. King
38. C. D. Susano
39. G. E. Boyd
40. R. B. Briggs
41. G. W. Parker
42. L. J. Brady
43. H. P. House
44. O. Menis
45. C. H. Secoy
46. L. E. Burkhart
47. R. N. Lyon
48. S. A. Reynolds
49. P. F. Thomason
50. R. Rowan, Jr.
51. D. E. LaValle
52. A. R. Brosi
53. A. F. Roemer, Jr.
54. E. I. Wyatt
55. G. W. Leddicotte
56. C. Feldman
57. T. E. Willmarth
58. C. L. Burros
59. J. H. Edgerton
60. L. T. Corbin
61. P. M. Reyling
62. D. D. Cowen
63. S. D. Schiffman (K-25)
64. H. P. Raaen
65. J. C. White
66. W. K. Miller
67. U. Koskela
68. E. P. Wigner (consultant)
69. D. J. Fisher
70. G. C. Williams

[redacted]

[redacted]

[redacted]

EXTERNAL DISTRIBUTION

71-78.	Argonne National Laboratory
79-83.	Atomic Energy Commission, Washington
84-87.	Brookhaven National Laboratory
88-91.	Knolls Atomic Power Laboratory
92-98.	General Electric Company, Richland (1 copy to A. H. Bushey)
99-102.	Los Alamos
103.	Mound Laboratory
104-106.	New York Operations Office
107.	Patent Branch, Washington
108-122.	Technical Information Service, Oak Ridge
123-126.	University of California Radiation Laboratory
127-130.	Carbide and Carbon Chemicals Company (Y-12)
131-134.	E. I. du Pont de Nemours and Company
135-136.	New Brunswick Laboratory
137.	Savannah River Operations Office, Wilmington
138-139.	Westinghouse Electric Corporation
140-142.	Idaho Operations Office (1 copy to Phillips Petroleum)
143.	North American Aviation, Inc.

[redacted]

[redacted]

[redacted]

Reports previously issued in this series are as follows:

ORNL-686	Period Ending March 31, 1950
ORNL-788	Period Ending June 30, 1950
ORNL-867	Period Ending October 10, 1950
ORNL-955	Period Ending January 10, 1951
ORNL-1088	Period Ending March 26, 1951
ORNL-1113	Period Ending June 26, 1951
ORNL-1129	Period Ending September 10, 1951
ORNL-1233	Period Ending December 26, 1951
ORNL-1276	Period Ending March 26, 1952
ORNL-1361	Period Ending June 26, 1952

[redacted]

[redacted]

[redacted]

CONTENTS

PAGE

ABSTRACT ix

PUBLICATIONS xii

ANALYTICAL CHEMISTRY DIVISION – X-10 SITE

RESEARCH AND DEVELOPMENT 1
Ionic Analyses 1
Derivative polarography: New RC method 1
Development of an automatically recording, internal-standard, flame photometer. II. Ratio and control circuit 2
Damped external meter for Applied Physics Corporation vibrating-reed electrometer, model 30 2
Modification of input circuit of ORNL Q-1160-6 Brown high-impedance preamplifier 3
Analytical applications of high-frequency oscillators. I. High-frequency energy-loss meter 3
Analytical applications of high-frequency oscillators. II. ORNL Gridos 4
Polarographic determination of lead and zinc as impurities in thorium metal 5
Low-resistance "salt" bridge with cellophane barriers 5
Colorimetric estimation of nitrate in the presence of uranium . . . 7
Determination of uranium(III) in the presence of a large excess of lanthanum trifluoride 7
Simultaneous spectrophotometric determination of copper, cobalt, and nickel as diethyldithiocarbamates 8
Instrumentation for the determination of densities of aqueous solutions by the falling-drop method 8
Vacuum-fusion analysis of metals and alloys 9
New apparatus for submicro potentiometric titrations 10
Quantitative removal of iron from plutonium solutions 11
Radiochemical Analyses 11
Nuclear properties 11
New gamma radiation in thorium-234 11
Measurement of radioactivity 12
Comparison of ORNL and Tracerlab G-M counter tubes 12
Low-level radioassay laboratory 14
Gamma scintillation counters 14

[redacted]

[redacted]

[redacted]

Analysis for heavy elements 15
Plutonium analysis by alpha counting 15
Analysis of cyclotron products 18
Identification of radioelements 18
Impurities in reactor-bombarded copper 18
Solvent extraction methods 19
Separation of americium from yttrium 19
Niobium-tantalum separation 19
Electrolytic methods 19
Miscellaneous radiochemistry 19
Carrying of copper by fluoride precipitates 19
Teaching and training 23
Activation Analyses 24
Irradiation facilities 24
Measurement of neutron flux in vertical holes of the LITR 24
Determination of trace elements by means of their short-lived radioisotopes 24
Determination of trace amounts of vanadium in petroleum hydrocarbons 25
Determination of trace amounts of aluminum, mercury, silver, and sulfur 25
Determination of trace amounts of uranium 25
Assay of aplite ore for trace elements 28
Modifications to existing analytical procedures for trace element analysis 29
Determination of arsenic 29
Determination of nickel 29
Use of sodium sulfide and ammonium sulfide for sulfide precipitations 29
Determination of trace amounts of rare earths by ion-exchange procedures 30
Determination of trace amounts of metals by electrodeposition procedures 30
New applications of activation analyses 30
Spectrochemical Analyses 30
Determination of traces of zinc in copper 30
Determination of 0.2 to 10.0% niobium in thorium-niobium alloy . . . 31
Extension of operating concentration range for iron, nickel, chromium, manganese, calcium, and magnesium solutions 31
Determination of samarium in europium 31
Inorganic Preparations 32
Solid solutions of uranium trihalides in lanthanum halides 32
Analytical Control of the HRE Solution 33
Optical and Electron Microscopy 33

[redacted]

[redacted]

[redacted]

SERVICE ANALYSES 34
Ionic Analyses 34
Radiochemical Analyses 34
Activation Analyses 34
General Radiochemical Analyses 34
General Analysis Laboratory 35
Ion-exchange separation of fluoride 35
Automatic potentiometric microtitration of boron 35
Calibration of servo remote-control pipet 37
Ion-exchange separation of sodium and uranium 37
Laboratory and Semi-Works Control 37
Pilot Plant Control 38
HRE Analyses 40
Use of ORNL automatic titrator in ferric sulfate titration of uranium 40
Automatic titration of uranium with stationary electrodes and rotating container 40
Isolation Analyses 43

ANALYTICAL CHEMISTRY DIVISION - Y-12 SITE

RESEARCH AND DEVELOPMENT 45
Analytical Studies of Reactor Fuels and Their Components 45
Analysis of Alkali Hydroxides 45
Vanadium 45
Chromium 46
Determination of Uranium in Bartow Clays 46
Cellulose column method 46
Ultraviolet absorption method 47
Indirect colorimetric method 48
Analysis of Uranyl Sulfate and Uranium Oxide 49
Zirconium 49
Nickel 49
Nitrate 50
Aluminum 51
Analysis of Thorium Oxide Slurries 51
Thorium 51
Fluoride 51
Quality Control 52
General analytical chemistry laboratory 52
HRP analytical chemistry laboratory 52
ANP analytical chemistry laboratory 54
Analytical chemistry laboratories (X-10 site) 56

[redacted]

[redacted]

[redacted]

SERVICE ANALYSES 58
Analytical Services for the ANP Project 58
Analysis of Ores and Related Materials 60
Miscellaneous analyses 60
Analytical Services for the HRP 60

[redacted]

[redacted]

[redacted]

[redacted]

ABSTRACT

ANALYTICAL CHEMISTRY DIVISION
X-10 SITE

New developments and modifications in analytical instrumentation are reported. A new method of resistance-condenser (RC) derivative polarography is presented. The method employs a negative-feedback, d-c current amplifier that permits the use of a high-value measuring resistor without causing a large voltage drop in the cell circuit. It also has a greater signal-to-noise ratio than the other RC derivative polarography circuits that have been described in previous reports. A pilot-model derivative polarograph, ORNL model Q-1338, is being constructed and a circuit diagram is given. The high-frequency energy-loss meter has been modified by adding a fine-adjustment capacitor to the test head and increasing the sensitivity of the indicating meter by dividing the voltage range into ten parts. Each part is then amplified to read full-scale. A ratio and control circuit for a recording, internal-standard, flame photometer has been built and will be tested soon. The circuitry is shown for a damped external meter that has been designed and installed on an Applied Physics Corp. vibrating-reed electrometer to electrically average the fluctuations of the internal meter. This permits increased accuracy, which is gained at the sacrifice of time. A circuit diagram is given of the ORNL model Q-1160-6 Brown high-impedance preamplifier. The diagram shows a modification that permits the use of a common ground in order to reduce a-c pickup trouble. A grid-dip oscillator, designated Gridos, has been built, and its analytical applications are discussed. A summary is given of the improvements in the instrumentation for the determination of the densities of aqueous solutions by the falling-drop method. A low-resistance "salt" bridge with cellophane barriers has been developed for use in coulometric titrations, and a new apparatus has been constructed for submicro potentiometric titrations.

Spectrophotometric methods are proposed for determining nitrate impurities in uranyl sulfate solutions and for the simultaneous determination of copper, cobalt, and nickel as diethyldithiocarbamates. Vacuum-fusion analyses of thorium, columbium, and titanium for gaseous constituents are discussed. A polarographic determination of lead and zinc impurities in a sample of thorium metal of interest to the AEC is reported. A modified electrodeposition method is proposed for the removal of interfering iron from plutonium solutions.

A previously unknown gamma ray has been found in Th^{234} (UX_1). Comparisons of the efficiencies of ORNL and Tracerlab G-M tubes are reported. The construction of a laboratory at the Y-12 site for low-level radioassays has been proposed. Progress has been made in the assay of high

[redacted]

[redacted]

g/t[1] plutonium by alpha counting. Analytical assistance in the Y-12 cyclotron program has continued. Research in solvent-extraction methods of radioanalysis has continued, and workin controlled-cathode electrolytic separations of radioelements is beginning. A study of coprecipitation of copper with various fluorides by use of Cu^{64} is reported. The training program in analytical radiochemistry is discussed.

The use of activation analysis in the determination of trace quantities of elements in petroleum, hydrocarbons, fine chemicals, cellulosic materials that include filter paper, and ores is described. Modifications to existing activation-analysis procedures for arsenic, nickel, and the acid and basic sulfide elements are reported. A tabulation of short-lived radioisotopes suitable for use in activation analysis is presented, and the use of one of these in the determination of vanadium in petroleum hydrocarbons is discussed. Neutron-irradiation facilities currently available for activation analysis work are reviewed and new applications of the method are suggested.

Spectrochemical procedures are proposed for traces of zinc in copper, for niobium in thorium-niobium alloy, and for samarium in europium. Extension of the spectrochemical operating concentration range for iron, nickel, chromium, manganese, calcium, and magnesium solutions is reported.

[1] g/t = grams of plutonium per ton of uranium; an indirect measure of neutron irradiation time and neutron flux that is used to determine amounts of plutonium isotopes in samples.

The synthesis of a solid solution of uranium trichloride in lanthanum trichloride is described.

The development and evaluation of the Princo Densitrol for analytical control of the HRE fuel solution was concluded and a complete report of the work is forthcoming. The application of optical and electron microscopy to problems related to the HRP is described.

Special problems of the service analytical work are indicated and new or modified procedures are discussed for ion-exchange separation of fluorides and of sodium and uranium, automatic potentiometric microtitration of boron, specific gravity of uranyl nitrate solutions, and the potentiometric titration of uranium in HRE fuel solutions. The new apparatus mentioned include a servo remote-control pipet, a heating block for evaporating TBP-Amsco solution for alpha counting, and an assembly for the automatic titration of uranium with stationary electrodes and a rotating container. The routine service work is summarized.

ANALYTICAL CHEMISTRY DIVISION Y-12 SITE

In connection with the ANP Project, the methods for analysis of the proposed ARE fuel ($NaF-ZrF_4-UF_4$) and its components have been improved and simplified. In addition, a study has been made of the products of the reaction between NaK and reactor fuels. An apparatus for the determination of oxygen in reactor fuels has been fabricated.

[redacted]

[redacted]

Successful methods for the determination of submicrogram quantities of chromium and vanadium in alkali hydroxide have been developed. Two promising colorimetric methods for the determination of uranium in phosphate ores are being tested.

Extensive investigations of methods for the determination of nickel and zirconium in uranyl sulfate are now complete, and other methods being studied for the analysis of uranyl sulfate or oxide include those for the determination of nitrate and aluminum in microgram quantities. A method for the determination of fluoride in thorium oxide slurries is also described.

The Analytical Service Laboratories made a total of 31,353 determinations during the period. A brief review of the work is given, and a distribution of personnel and of determinations by projects is presented.

[redacted]

[redacted]

PUBLICATIONS

W. S. Lyon, "Disintegration of Cr^{51}," *Phys. Rev.* **87** (Sept. 15, 1952, in press).

F. L. Moore, *A New Anionic Solvent Extraction Technique*, ORNL-1314 (July 3, 1952).

B. L. Cohen, T. H. Handley, *An Experimental Search for the Dineutron. Part I. Search for a Stable Dineutron*, ORNL-1382 (Sept. 23, 1952).

R. L. McCutchen and C. D. Susano, *Effect of Fluoride on the Gravimetric Determination of Zirconium in Zirconium Fluoride*, ORNL-1307 (July 29, 1952).

J. E. Lee, Jr., R. Rowan, Jr., C. D. Susano, and O. Menis, *The Density of Uranyl Sulfate Solutions and the Determination of Uranium Concentration by Density Measurements*, ORNL-1332 (July 29, 1952).

O. Menis and R. Rowan, Jr., *Absorption Spectrum of Uranyl Sulfate Solution*, ORNL-1351 (Aug. 5, 1952).

[redacted]

ANALYTICAL CHEMISTRY DIVISION - X-10 SITE

RESEARCH AND DEVELOPMENT

IONIC ANALYSES

P. F. Thomason

Derivative Polarography: New RC Method (M. T. Kelley, D. J. Fisher, L. A. Meeks,[1] J. P. Palmer[1]). The low-level, d-c, voltage-amplifier, RC method of derivative polarography, which has been described previously,[2] has been explored further. A modified Leeds & Northrup microvolt amplifier and specially designed, d-c, voltage amplifiers have been tried. In each case, the signal-to-noise ratio of the low-level input signal proved to be the limiting factor. The derivative peak, although sharp, was more noisy than that which can be obtained by the new RC method. As a consequence, it was decided that the low-level, d-c, voltage-amplifier RC method is not satisfactory.

In the d-c, voltage-amplifier method, the signal-to-noise ratio at the amplifier input could be improved by raising the value of the current-measuring resistor an arbitrary amount, say tenfold, together with the use of filter networks. This would result in a corresponding increase in signal level without a significant increase in noise level. However, since this resistance is in series with the cell, it causes an increased voltage drop which, in turn, causes the cell voltage to differ from the applied voltage by an amount equivalent to the increased voltage drop. A solution to the problem has been found in a new RC method that retains the advantage of high signal-to-noise ratio and minimizes the voltage drop.

The new method uses a negative-feedback, d-c current amplifier instead of a d-c voltage amplifier. Figure 1 shows a simplified diagram of the new scheme. In this arrangement, the negative feedback maintains the input at ground potential. From circuit analysis, it is seen that a portion of the output voltage, feedback voltage (E_{FB}), is connected in series with the input voltage across R. These voltages are of opposite sign and are of equal magnitude within one part in K, where K is the product of the amplifier gain, A, and beta, which is the ratio of E_{FB} to E_{out}. K is of the order of several hundred. Since the output signal is proportional to R, the magnitude of R must be large, but the new method permits it to be large without disturbing the cell voltage. The amplifier output is a high-level, high signal-to-noise ratio, and low-impedance-source voltage that is a greatly improved input signal for the RC derivative network. In the new method, the quadruple, parallel-T, RC filter that removes oscillations resulting from the growth and fall of each mercury drop follows the RC derivative network because better impedance-matching is obtained by this arrangement.

The beta network of the 100% feedback, impedance-matching, d-c amplifier described previously[3] was temporarily modified for preliminary trial and development of the new method. With this test setup, R was increased twentyfold over the value used previously. An input of 1 μa produced an output of 0.5 volt, and K was about 400. Preliminary data

(1) ORNL Instrument Department.

(2) M. T. Kelley, D. J. Fisher, "Derivative Polarography: RC Method," *Anal. Chem. Quar. Prog. Rep. June 26, 1952*, ORNL-1361, p. 1.

(3) M. T. Kelley and D. J. Fisher, "Development of an Automatically Recording, Internal-Standard, Flame Photometer. I. 100% Feedback, Impedance-Matching, Direct-Current Amplifier," *Anal. Chem. Quar. Prog. Rep. June 26, 1952*, ORNL-1361, p. 4.

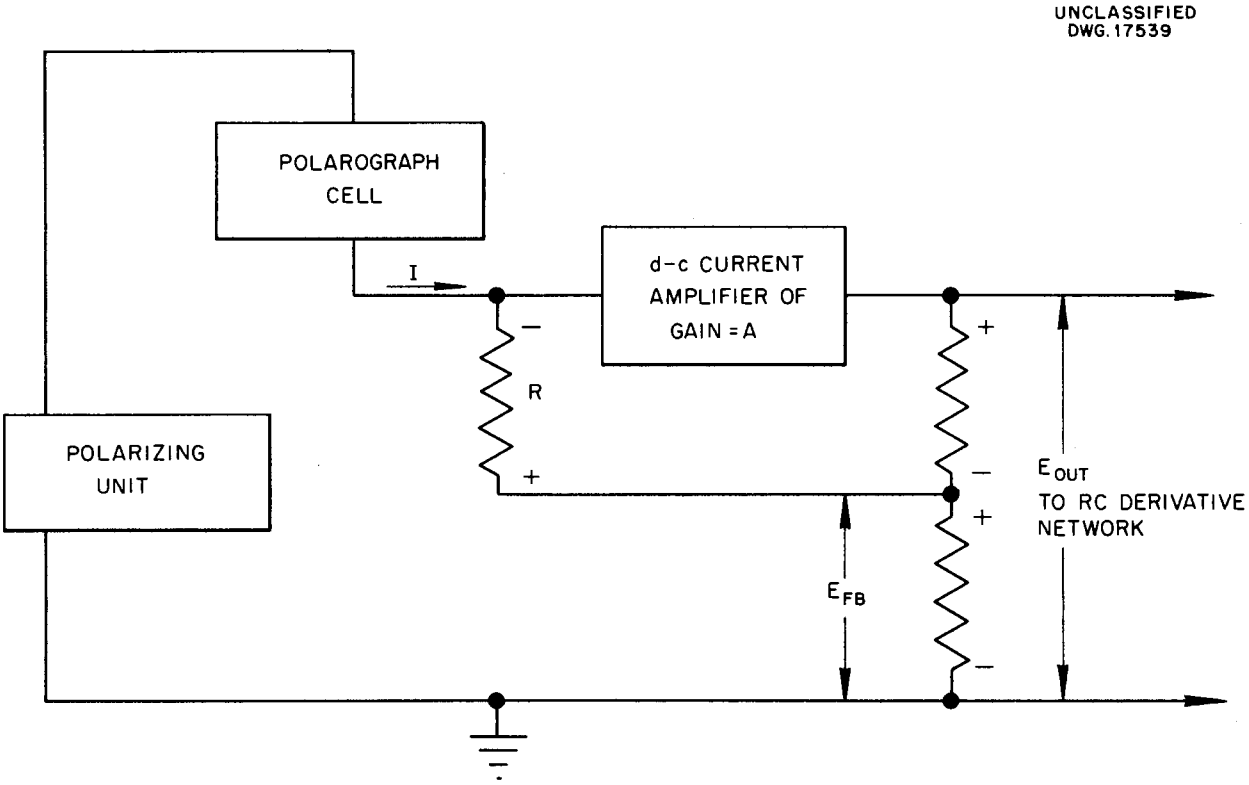

Fig. 1. Simplified Diagram of Circuit Used in New Method of RC Derivative Polarography.

indicate that derivative polarograms obtained with this new method are satisfactory. Copper and uranium peaks are resolved without mutual interference. The noise level on the derivative signal is sufficiently low. The cancellation of the voltage drop across the current-measuring resistor is of interest for regular polarography at very high sensitivity.

A pilot-model derivative polarograph, ORNL model Q-1338, based on this work is being constructed by the Instrument Department. It is expected that a topical report covering all the work on derivative polarography will be written after the new derivative polarograph has been completely tested.

Development of an Automatically Recording, Internal-Standard, Flame Photometer. II. Ratio and Control Circuit (M. T. Kelley, D. J. Fisher). A circuit has been built that obtains the ratio of the photomultiplier output for the unknown to the photomultiplier output for the internal standard and plots this ratio on the chart of a Brown recorder. In addition, control circuits are included. The photometer will be tested and put into service as soon as possible. It will be delineated in a forthcoming report.

Damped External Meter for Applied Physics Corp. Vibrating-Reed Electrometer, Model 30 (M. T. Kelley, D. J. Fisher, N. D. Lee). Under certain conditions, the needle of the internal indicating meter on the Applied Physics Corp., model 30, vibrating-reed electrometer fluctuates enough to make an accurate visual reading of its average position difficult. A damped external-meter circuit has been designed and installed that electronically averages this fluctuation. Because of the heavy damping - 24-sec time constant required for the external meter - it is necessary to allow

about 240 sec of electronic averaging time prior to each reading of the external meter; accuracy is thus gained at the expense of time. The circuit is shown in Fig. 2. Provision is made for calibrating the external damped meter against the internal meter by use of a potentiometer. The momentary switch shown in the circuit diagram permits the zeroing of the external meter to be conveniently checked.

Modification of Input Circuit of ORNL Q-1160-6, Brown, High-Impedance Preamplifier (M. T. Kelley). In the ORNL model Q-1160-6, Brown, high-impedance preamplifier, the ground of the outboard equipment that is connected to the preamplifier input through a Brown recorder cannot be connected to the ground of the preamplifier. The lack of a common ground can cause considerable a-c pickup trouble. A modification of the input circuit of the preamplifier that permits a common ground is shown in Fig. 3. A great reduction of a-c pickup trouble is achieved by means of this change, and the modification has also been found useful where filters are needed because it eliminates phase shift in the feedback circuit.

Analytical Applications of High-Frequency Oscillators. I. High-Frequency Energy-Loss Meter (M. T. Kelley, E. B. Wagner, W. Pruessner, D. J. Fisher). The high-frequency energy-loss meter described previously[4] has been modified in two ways by K. H. Kline of the Instrument Department and resubmitted to the Ionic Analyses group for application evaluation. The modifications are (1) the addition of a fine-adjustment capacitor to the test head and (2) an effective tenfold increase in the length of the meter scale. The latter was accomplished by dividing the voltage range covered by the original meter into ten parts and then amplifying each part to read full-scale. A selector switch determines which of the ten parts is being observed. The principles and technique of operation of the modified instrument are essentially unchanged, and the description will not be repeated.

The instrument is being evaluated as a continuous indicator for the

[4] D. J. Fisher, E. B. Wagner, and M. T. Kelley, "Analytical Applications of High-Frequency Oscillators. I. High-Frequency Energy-Loss Meter," *Anal. Chem. Quar. Prog. Rep. June 26, 1952*, ORNL-1361, p. 3.

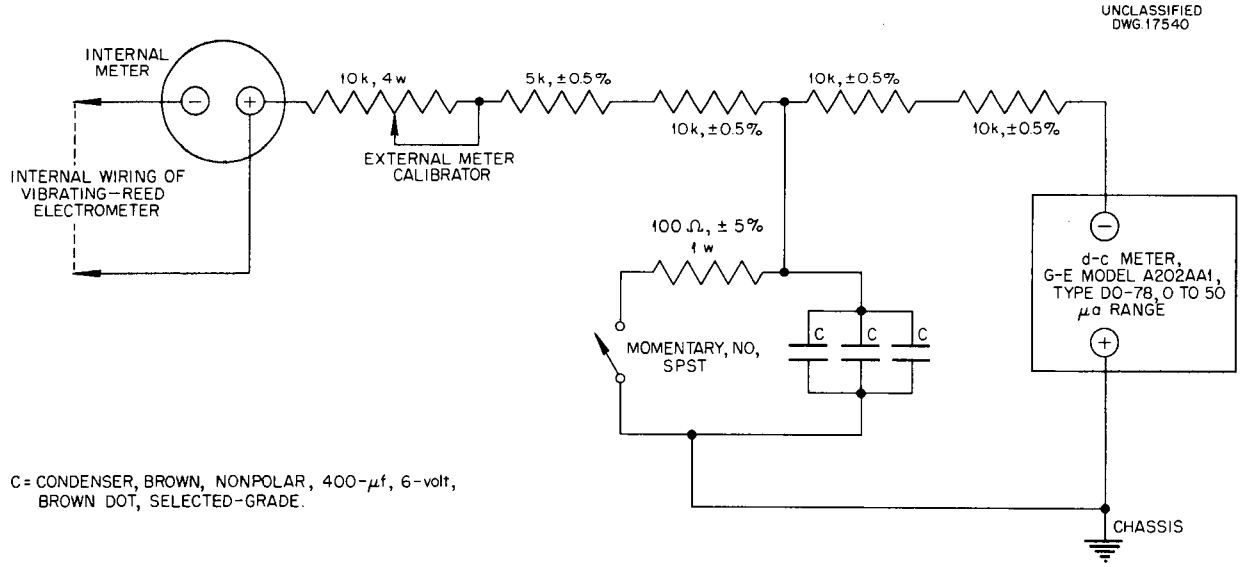

Fig. 2. Circuit of a Damped External Meter for Applied Physics Corporation, Model 30, Vibrating-Reed Electrometer.

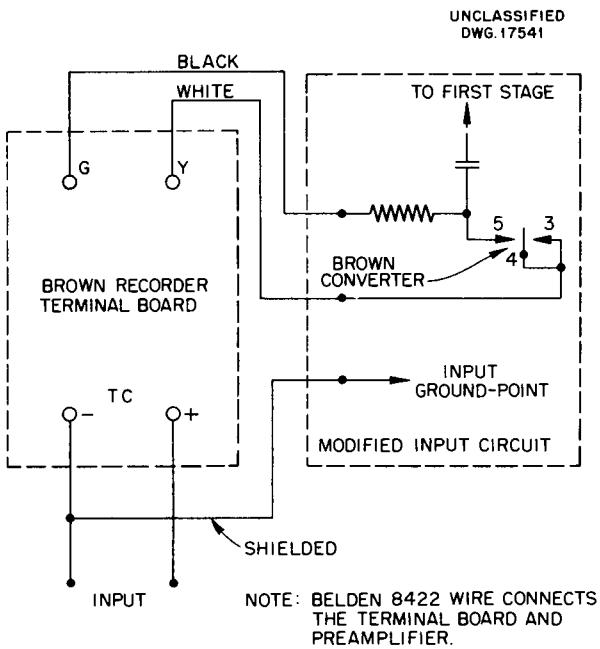

Fig. 3. Circuit Showing Modification of Input Circuit of ORNL Q-1160-6 Brown High-Impedance Preamplifier.

analysis of certain process-solution streams. It will also be evaluated for concentration measurement of various types of other solutions, as well as for titrations.

Analytical Applications of High-Frequency Oscillators. II. ORNL Gridos (M. T. Kelley, D. J. Fisher, E. B. Wagner). The grid-dip oscillator mentioned in a previous report[5] has now been built and given an initial evaluation. It is distinguished from other analytical high-frequency instruments by the coined name "Gridos." The design of the Gridos incorporates ideas that have been discussed previously.[6,7,8] The basic circuit is a grid-dip type of oscillator circuit that has proved to be more stable for analytical applications than most other oscillators.

As a check on the long-term circuit stability of the instrument, the grid-current deviation was monitored for a period of 16 hr, and the deviation was found to be ±0.5% of 1 ma. A 2.5 *M* solution of KCl was placed in the coil of the Gridos and the frequency set at 4 megacycles for the stability test. The short-term stability is such that a 0 to 50-μa range is used for the highest sensitivity scale.

The design of the Gridos provides several versatile features. The frequency of the oscillator can be varied from 1 to 80 megacycles by means of a variable tuning condenser and plug-in coils. Also, test solutions may be placed in the field of either a coil or a condenser of the oscillator's tank circuit. In addition, several types of cells have been developed that can be used in both the coil and condenser of the Gridos.

Certain effects resulting from the properties of electrolytic solutions can be observed by placing the solutions within a high-frequency field, either electrostatic or electromagnetic. These effects include the irreversible absorption of energy as heat and a quadrature reversible-energy absorption that is due to dielectric constant. at a particular frequency and temperature, the absorption of energy and the dielectric constant are complex functions of the concentration. These energy-absorption changes result in a difference of load on the oscillator and a slight change of frequency, both of which cause a change of grid current of the oscillator. The grid current is metered with the aid of a bucking circuit so that small changes in grid current may be read. Five meter ranges are available with full-scale values of 50 μa to 5 ma.

Thus far the Gridos has been used for the determination of the concentration of inorganic compounds in

(5) *Ibid.*, p. 4.

(6) K. Anderson, E. S. Bettis, and D. Revinson, "Stable High-Frequency Oscillator-Type Titrimeter," *Anal. Chem.* 22, 743 (1950).

(7) American Radio Relay League, *The Radio Amateur's Handbook*, 29th ed., West Hartford, Conn., 1952.

(8) *Instructions for the Millen Grid-Dip Meter*, James Millen Mfg. Co., Inc., Malden, Mass.

various inorganic and organic solvents. The Gridos has also been used, with promising results, in kinetic studies of hydrogen peroxide decomposition in uranyl sulfate solutions; the work was done in cooperation with M. D. Silverman and G. Watson of the Chemistry Division.

Polarographic Determination of Lead and Zinc as Impurities in Thorium Metal (H. H. Miller). A sample of thorium metal of interest to the AEC was submitted for polarographic analysis as a check on the lead and zinc impurities. It was found necessary to remove the impurities from the thorium metal prior to their polarographic determination, because the large excess of thorium gave a high residual current when polarographed.

The procedure of analysis was as follows: A 1.000-g sample of the thorium metal was dissolved in 10 ml of concentrated HNO_3 to which a few milligrams of NH_4F had been added to aid the dissolution. After the metal was dissolved, the solution was evaporated until most of the nitric acid had been volatilized, and the residual liquid was transferred quantitatively to a separatory funnel. Thirty milliliters of a 20% ammonium citrate solution that had been treated several times with dithizone-chloroform reagent until the dithizone remained green was added to the funnel and the pH adjusted to 9.5 with dilute NH_4OH solution. The lead and zinc were then extracted with several aliquots of dithizone-chloroform and stripped from the dithizone-chloroform phase into 0.5 *N* HCl solution by means of three 5-ml aliquots of 0.5 *M* HCl solution. The HCl solution was evaporated to dryness, and the residue was dissolved in a supporting electrolyte of 5 ml of a solution 0.1 *N* in ammonium acetate and 0.025 *N* in KCNS.[9] This solution was polarographed with a high-sensitivity polarograph, and well-defined lead and zinc waves were obtained. The approximate half-wave potentials for lead and zinc in this medium are, respectively, -0.5 and -1.0 v vs. S.C.E. The thorium sample was found to contain 11.7 ppm of lead and 2.6 ppm of zinc. A comparison of these values with results from other laboratories shows that the value for zinc is in agreement and the value for lead is slightly high.

Low-Resistance "Salt" Bridge with Cellophane Barriers (A. D. Horton). In the coulometric titrations described earlier,[10] the salt bridge that connects the coulometric cell to a standard reference cell in the indicating circuit of the modified Sargent polarograph has been a continual source of trouble. Originally,[11] a 3% ammonium sulfate-3% agar jell was recommended, but ceric ion that was generated in the coulometric cell attacked the organic jell and caused a partial mechanical block. This resulted in greatly increased resistance that impaired the conductivity of the bridge and interfered with the normal response of the Brown recorder.

Other types of conducting media were tried in the bridge. A fine-porosity glass frit was used as a liquid-permeable barrier at the ends of the bridge, and the bridge was filled at different times with various electrolytes. In a short time, however, plugging of the frit and back-diffusion of the liquids from the cells into the bridge increased the resistance of this type of bridge to a value that rendered it unusable. The lowest resistance of any bridge previously tried was 8000 ohms. The bridge will have a resistance as low as 2000 to 2500 ohms, under ideal conditions, in the recording circuits

(9) P. R. Stout, J. Levy, and L. C. Williams, "Polarographic Studies with the Dropping Mercury Kathode - Part LXXIII - The Estimation of Zinc in the Presence of Nickel, Cobalt, Cadmium, Lead, Copper and Bismuth" (in English), *Collection Czechoslov. Chem. Commun.* **10**, 129 (1938).

(10) P. F. Thomason and M. T. Kelley, "Microcoulometric Titrations," *Anal. Chem. Quar. Prog. Rep. June 26, 1951*, ORNL-1113, p. 6.

(11) N. H. Furman, personal letter to M. T. Kelley, April 23, 1951.

for the polarograph in which the use of KCl-agar or KNO_3-agar is permissible.

According to Lee,[12] cellophane of an unspecified type has been used as a barrier material in the construction of a battery which produces a high current that remains constant for long periods of time. The components of the battery were solid silver oxide and concentrated sodium hydroxide solution, separated from each other by a cellophane barrier. DuPont type 300-PT-62 cellophane was found to have the property of allowing the efficient transfer of electrons from one conducting liquid to another liquid or solid without being permeable to the liquid.

It has been possible to construct a "salt" bridge with a resistance of only 1500 ohms by utilizing this property of cellophane (Fig. 4). Because sodium hydroxide was used as the electrolyte in the battery, the bridge was filled with 0.1 *N* NaOH solution. The cellophane-covered ends were placed in a beaker that contained 0.1 *M* H_2SO_4 solution, and the resistance across the bridge was found to be 20,000 ohms. Weighed amounts of

[12] N. Lee, personal communication to A. D. Horton, August 1, 1952.

UNCLASSIFIED
DWG. 17542

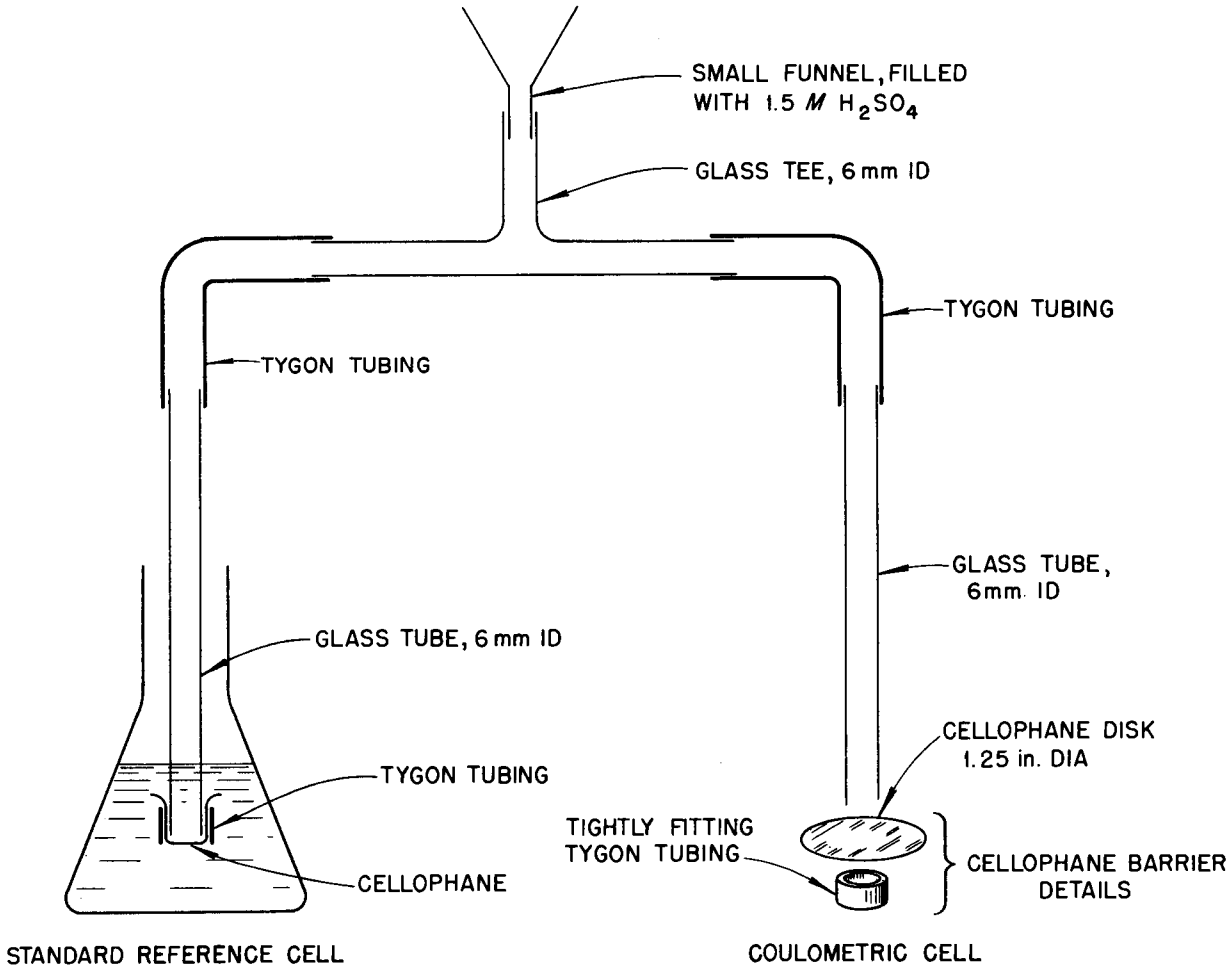

Fig. 4. Conductivity Bridge with Cellophane Barriers.

solid NaOH were added to the bridge in small increments as long as the resistance of the bridge continued to drop. The resistance reached a constant value of 1900 ohms and did not change upon further addition of NaOH. The molarity of the NaOH solution at the time the resistance became constant was calculated to be approximately 1.5.

As mentioned previously, the cellophane barrier used in this experiment was impermeable to liquids. However, the other physical and chemical properties of the cellophane were not known, and with the use of NaOH solution as the electrolyte, a rupture would admit fairly strong caustic solution into a strongly acid system. Therefore it was decided to substitute 1.5 *M* H_2SO_4 solution for the NaOH solution in the bridge. The resistance of the sulfuric acid bridge was found by measurement to be 1500 ohms when the cellophane-covered ends were placed in 0.1 *M* H_2SO_4 solution.

In order to check the physical and chemical stability of the barriers, the bridge was filled with 1.5 *M* H_2SO_4 solution, and the cellophane-covered ends were placed in a beaker containing 1.5 *M* H_2SO_4 solution. The condition of the bridge was checked every 24 hr, and a very small loss of solution was noted daily as a result of evaporation. After 20 days there was enough loss from evaporation to break the liquid column, but the barriers remained intact. If a stopcock were placed in the funnel stem it would eliminate evaporation from the bridge. At the end of 44 days, one of the barriers that had been allowed to remain dry for 10 days was brittle and cracked. The barrier that had remained in the 1.5 *M* H_2SO_4 solution leaked very slowly, but was still intact. However, it was ruptured by a slight pressure with the finger, thus indicating a considerable loss of physical strength.

The barriers should give satisfactory use for two to three weeks. Only a few minutes are required to replace the cellophane, and a periodic change at intervals of two to three weeks will ensure efficient performance. The resistance of the bridge remains constant as long as the cellophane barriers are intact. The performance of the bridge in coulometric titrations will be evaluated.

Colorimetric Estimation of Nitrate in the Presence of Uranium (J. M. Chilton). A request was received from the Chemical Technology Division for a colorimetric method for the determination of nitrate impurities in uranyl sulfate solutions. A micro-Kjeldahl procedure was found to be unsatisfactory for such samples. After a check of several of the methods given by Snell and Snell,[13] a procedure has been developed in which the uranium is precipitated with sodium hydroxide solution, the resulting solution is evaporated to a small volume, the precipitate is removed by filtration, and the nitrate is determined in the filtrate by the standard colorimetric brucine method.[14]

A standard solution of UO_2SO_4, presumably nitrate-free, was made by dissolving U_3O_8 (National Bureau of Standards sample MS-ST) in reagent-grade H_2SO_4. Analyses of aliquots of a standard solution of KNO_3, with and without the addition of the standard uranyl solution, indicated that the method is accurate to ±5%.

Determination of Uranium(III) in the Presence of a Large Excess of Lanthanum Trifluoride (J. M. Chilton). In connection with the preparation of uranium trihalides for the Physics Division, D. LaValle requested that uranium(III) in a mixture of UF_3, LaF_3, and traces of UF_4 be determined. The procedure in use at the Y-12

(13) F. D. Snell and C. T. Snell, *Colorimetric Methods of Analysis*, 3rd ed., Vol. II, p. 785-801, Van Nostrand, 1949.

(14) *Ibid.*, p. 798.

Analytical Chemistry Division laboratories,[15] which employs total uranium and total reducing-power determinations, was attempted. This procedure, which requires the addition of an excess of cerium(IV) and back-titration with iron(II) using ferroin indicator, gave results for uranium(III) that were greater than the total uranium present. Because it was believed that the high fluoride content of the sample caused the high results for uranium, the procedure was modified to use potassium dichromate as the oxidizing agent. The use of diphenylaminesulfonic acid as an indicator in the back-titration did not give reproducible results; however, potentiometric determination of the end point with the automatic titrator gave good precision.

Simultaneous Spectrophotometric Determination of Copper, Cobalt, and Nickel as Diethyldithiocarbamates (J. M. Chilton). A procedure has been developed to determine microgram quantities of copper, cobalt, and nickel, especially in the presence of large amounts of other metals. The differences in the absorption spectra of the diethyldithiocarbamates of these ions are sufficient to allow the simultaneous determination of each ion from the optical densities of their solution at three separate wavelengths. The diethyldithiocarbamates are formed at pH 8.5 to 9.0 and extracted with carbon tetrachloride. The procedure will easily determine 5 μg of copper, 4 μg of cobalt, and 2 μg of nickel per sample. Bismuth and cyanide interfere when present in any concentration. Several other metallic ions interfere if present in excessive amounts. A paper that describes the work has been submitted to *Analytical Chemistry* for publication.

Instrumentation for the Determination of Densities of Aqueous Solutions by the Falling-Drop Method (M. T. Kelley, P. F. Thomason, W. Pruessner). Although the assembly discussed in the previous quarterly report[16] possessed adequate sensitivity, it was not suitable for routine use because it required frequent recalibration, adjustment, cleaning, and other attention. However, the most serious of these difficulties have been overcome, and a new instrument is being built for the HRE control laboratory.

The optical system has been simplified and its dependability improved. The Zirconarc light source has been replaced with a small, a-c powered, automobile headlight type of bulb. The sensitivity of light detection has been increased by replacing the 927 phototube with a 1P21 photomultiplier tube. The entrance- and exit-slit widths have been reduced from 1 to 0.1 mm; this is possible because of the great amplifying power of the 1P21, and, as a result, resolution is more than adequate. Interference with the response of the optical system by bubbles, dust, and algae in the water bath has been eliminated by the use of a Plexiglas plate fastened in optical contact with both the wall of the water bath and the tube through which the drop falls (fall tube). It is not now necessary for the light to pass through water. An additional advantage of the arrangement is that the prism and fall tube are firmly held in position by a housing that clamps onto the Plexiglas plate.

Some minor changes have been made in the switching and timing circuits. The increased voltage output of the photomultiplier permitted elimination

(15) D. L. Manning, W. K. Miller, and R. Rowan, Jr., *Methods of Determination of Uranium Trifluoride*, ORNL-1279 (April 25, 1952).

(16) M. T. Kelley, P. F. Thomason, W. Pruessner, "Instrumentation for the Determination of Densities of Aqueous Solutions by the Falling-Drop Method," *Anal. Chem. Quar. Prog. Rep. June 26, 1952*, ORNL-1361, p. 6.

of the amplifier, and the pulse that results when the falling drop interrupts the light beam is applied to a 2D21 thyratron through an RC, band-pass filter. The firing of the thyratron actuates the relays that start and stop the timer. A more easily read microammeter has been used in the timing circuit and a battery power pack for the photomultiplier has been mounted on the chassis.

The design of the water bath has been improved. Evaporation has been practically eliminated by closing the container. Thorough stirring has been assured and the time constant of the temperature control reduced by using a more powerful motor and by placing a larger stirring blade in a 5-in. diameter tube that encloses the immersion-heater coils. A continuously adjustable, mercury thermoregulator that has excellent stability and control to ±0.002°C has become commercially available, therefore the Thermistor bridge regulator has not been used. An enclosure has been built over the fall tube in order to decrease the errors caused by the temperature differential between the sample and bath and by the lack of equilibrium between atmospheric water and water in the reference medium and the sample. The temperature of a sample stored within the enclosure will rise to a temperature close to that of the bath. The enclosure is airtight and contains an open vessel of waste D_2O-H_2O mixture, the composition of which is maintained at a value close to that of the samples. The small amount of unavoidable H_2O-D_2O exchange occurring with the atmosphere of the enclosure thus causes a negligible change in the composition of both the sample and the water that is dissolved in the reference medium. A topical report is to be written that will describe the completed instrument in detail.

Vacuum-Fusion Analysis of Metals and Alloys (W. J. Wolkowitz). The vacuum-fusion analysis of thorium and its alloys for oxygen, hydrogen, and nitrogen has been established for routine use. The results of the analyses of some thorium-carbon alloys of the carbon content indicated are given in Table 1.

A sample of columbium metal of interest to the Powder Metallurgy group was analyzed for oxygen, nitrogen, and hydrogen. The results were not reproducible. A temperature of 2315°C was found to be too low to melt the sample in the presence of iron; however, the melting was effected at 1775°C by addition of nickel. Work will continue until the analysis of the sample can be made with satisfactory reproducibility.

A titanium sample, produced by the iodide process and of interest to the HRP, was analyzed for oxygen with

TABLE 1. OXYGEN AND NITROGEN IN THORIUM-CARBON ALLOYS*

ALLOY	CARBON IN THORIUM-CARBON ALLOY (wt %)	GASEOUS CONSTITUENT (wt %)	
		Oxygen	Nitrogen
1	0.049	0.01	0.001
2	0.085	0.004	0.003
3	0.101	0.07	0.008
4	0.130	0.05	0.06

*Vacuum-fusion analysis.

good reproducibility. A temperature of 1850 °C, which is higher than that usual for a vacuum fusion, was required because the titanium nitride that was present is more stable and requires a higher fusion temperature than the oxide. Also, an iron bath was used, and it was found that the maximum titanium concentration in the bath should not exceed 20 wt %. The analysis gave 0.16 wt % of oxygen in the sample.

The method of vacuum-fusion analysis is being used to determine hydrogen in uranium that has been pretreated for electroplating with nickel. The analyses are being made for the Metallurgy Division for use in studies of uranium pretreatments by nitric acid pickling, electrolytic etching, and anodic cleaning.

Similarly, pretreated titanium is being analyzed for hydrogen, and the results will be used in the HRP study of the effect of pretreatment on the impact properties of titanium. The pretreatments include exposures to solutions containing 40 g of uranyl sulfate per liter at 250 °C for ten days under gaseous H_2O_2 pressure.

New Apparatus for Submicro Potentiometric Titrations (F. J. Miller). Prerequisites for the submicrotitration of radioactive solutions are: a small aliquot size, a high concentration of the substance to be titrated, the immersion of the electrode in the solution, good stirring, the immersion of the buret tip in the solution, and an inert atmosphere. The apparatus illustrated in Fig. 5 fulfills the requirements.

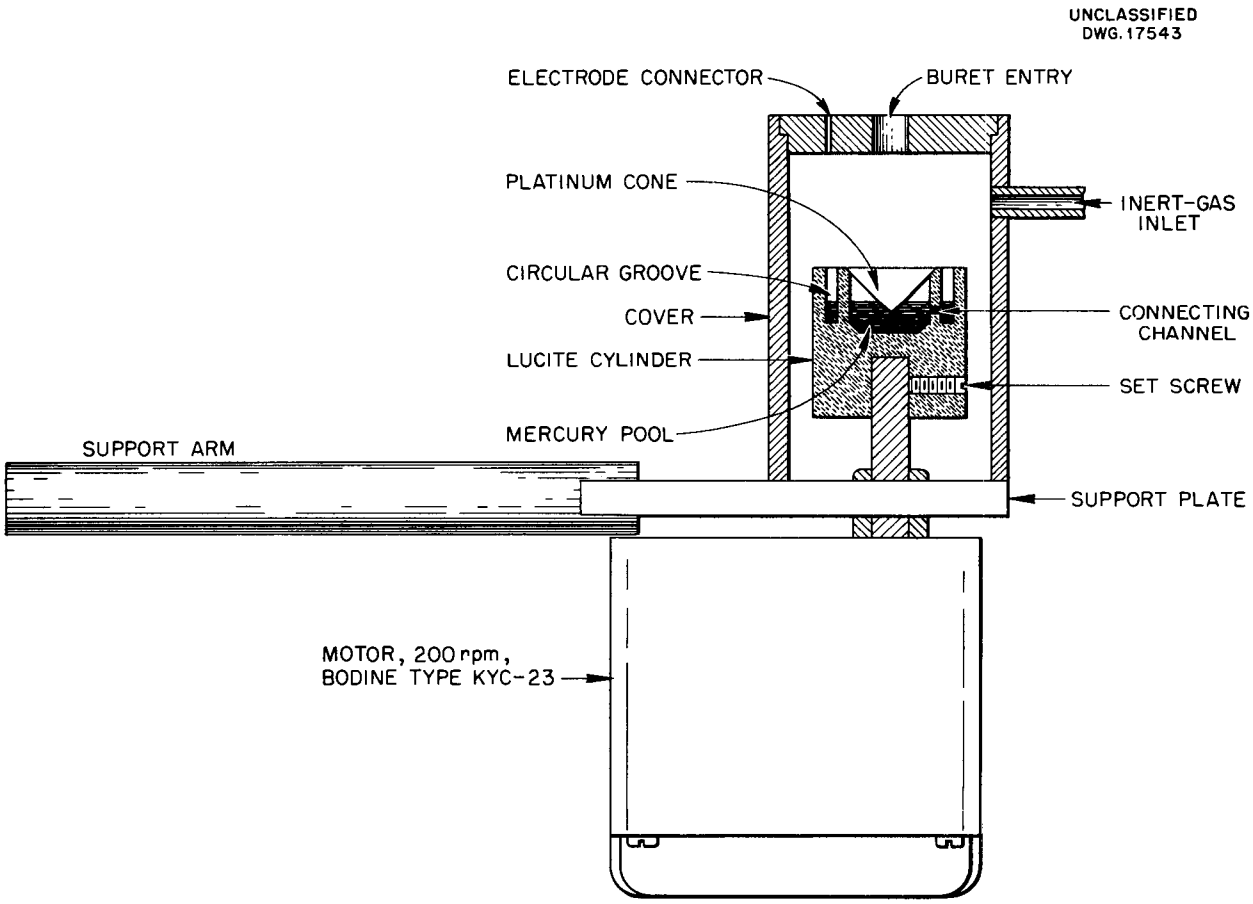

Fig. 5. Titration Vessel for Submicrotitrations.

A small Lucite cylinder was machined to provide a center well and a circular groove that are connected by a channel. The Lucite cylinder is attached to the shaft of a 200-rpm motor that is fastened to an aluminum supporting plate. Mercury placed in the well runs through the channel into the circular groove. An inverted platinum cone rests in the well so that the apex of the cone touches the mercury, and its base is supported by the wall of the well. The cone serves both as a titration vessel and an indicating electrode. A hollow, transparent-plastic cylinder covers the titration assembly. Holes are provided in the cover for electrode connection, buret entry, and inert-gas entry.

The apparatus is operated in the following manner. If the micropipet has been previously treated so that the walls are not wetted by the solution being pipeted, 25-μl aliquots are taken. If the pipet has not been treated, a smaller volume, in the range of 5 to 10 μl, must be used. The aliquot is placed in the platinum cone, and the entire assembly is raised so that the tip of the microburet is immersed in the liquid. The cover is then lowered so that it rests firmly upon the aluminum supporting plate and the electrode connector dips into the mercury in the circular groove. The electrical connections are then complete, if an electrode system similar to that of Willard and Boldyreff[17] is used. Inert gas is passed into the chamber and the motor is switched on to rotate the platinum cone. A rotation speed of 200 rpm is sufficient to provide ample stirring. Cobalt in 0.1 μg amounts has been titrated in this manner.

Quantitative Removal of Iron from Plutonium Solutions (F. J. Miller). The mercury-coated silver electrode previously described[18] for the removal of microgram quantities of iron from plutonium solutions was reported, by the HRE Analysis group, as failing in operation. Investigation disclosed the presence of milligram quantities of iron in the 1.5 to 2 *N* sulfuric acid solution that was being analyzed. Mercury was also present after the electrolyses.

A sheet-silver electrode, 1 by 2 cm, was substituted for the mercury-coated silver electrode. Precautions were taken to keep the potential on the electrodes prior to their immersion and during their withdrawal from the solution. The sample was cooled in an ice bath during electrolysis, and zinc was added subsequent to electrolysis to remove any mercury. Further work is being done to establish optimum conditions for the removal of iron through the use of these modifications.

RADIOCHEMICAL ANALYSES

S. A. Reynolds

Nuclear Properties

New Gamma Radiation in Thorium-234 (W. S. Lyon, D. J. Coombe). Thorium-234 (UX_1) has been reported to decay 80% to 0.205-Mev and 20% to 0.115-Mev beta radiation. The former goes directly to the ground state, the latter is followed by a 0.093-Mev gamma ray.[19] Recently, this nuclide has been examined on the sodium iodide crystal spectrometer, and several additional gamma rays have been noted.

Thorium-234 was separated from its parent, U^{238}, and used as a source on the sodium iodide crystal spectrometer. The gamma-ray spectrum was determined by means of the differential discriminator, and the data so obtained were

(17) H. H. Willard and A. W. Boldyreff, "A Simple Reference Electrode for Potentiometric Titrations," *J. Am. Chem. Soc.* **51**, 471 (1929).

(18) F. J. Miller, "Quantitative Removal of Iron from Plutonium Solutions," *Anal. Chem. Quar. Prog. Rep. March 26, 1952*, ORNL-1276, p. 19.

(19) H. Bradt and P. Scherrer, "The 93-kev Gamma Line of UX" (translated), *Helv. Phys. Acta* **19**, 307 (1946).

plotted (Fig. 6) as observed counts per minute vs. pulse height. Known energy standards in the region of 93-kev energy were run in order to calibrate the pulse-height scale in terms of energy. It is felt that the three lowest energy peaks may have been caused by tube noise, because it is questionable whether the crystal has any resolution in this low-energy region. It is planned to make an intensity measurement of these two gammas by comparing the area beneath each peak with the area beneath each peak of known intensity sources that have energy fairly close to that of the unknown.

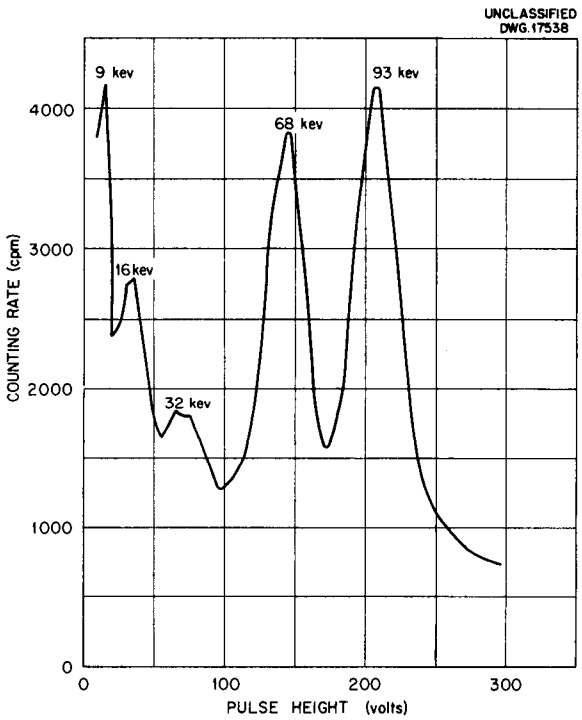

Fig. 6. Low-Energy Gamma Spectrum of Thorium-234. NaI-crystal spectrometer.

Measurement of Radioactivity

Comparison of ORNL and Tracerlab G-M Counter Tubes (W. S. Lyon, E. I. Wyatt[20]). The Analytical Chemistry Division has replaced many ORNL-made G-M counters with commercially available Tracerlab tubes. The ORNL counters are in the form of a brass-walled type of shell that is filled with alcohol at 1 cm Hg and argon at 9 cm Hg. The Tracerlab tube is a glass-walled counter filled with 72 cm Hg of helium and 1 cm Hg of organic vapor. Both counters use a mica window.

It has been observed that data from the two types of counters are not strictly comparable, even when a normalizing standard is used. The absolute beta-counting geometry on the ORNL tube is generally about 7.7%; that of the Tracerlab tube is about 8.6%. Consequently the need for and the use of a uranium (Th^{234}) normalizing standard is indicated. In order to ascertain the magnitude of the difference between the two counters, a series of sources was prepared, both on polystyrene and watch-glass mountings, and counted on six instruments. Three ORNL counters and three Tracerlab counters were used. The observed counts were corrected by the normalizing standard, and the values so obtained were then corrected so that the observed counts per minute were reduced to the value that would have been observed had the count been taken through a 3.0-mg/cm^2 mica window. The standardizations were the only efforts made to correct the observed data. The results were averaged and divided by the disintegration rate of the source. Whenever possible, the dpm value of the source was obtained by coincidence counting or ion-chamber reading. Where absolute beta counting was used, the source was calibrated separately for Tracerlab and ORNL counters. The nuclides used were: Pm^{147}(0.22 Mev), Ca^{45}(0.25 Mev), Co^{60}(0.31 Mev), Sc^{46}(0.36 and 1.5 Mev), Na^{22}(0.57 Mev), Tl^{204}(0.78 Mev), Au^{198}(0.97 Mev), Sr^{89}(1.5 Mev), P^{32}(1.71 Mev), Ce^{144}-Pr^{144}(0.35 and 3.00 Mev), and Ru^{106}-Rh^{106}(3.55 Mev).

[20] Radioisotope Production Analysis group.

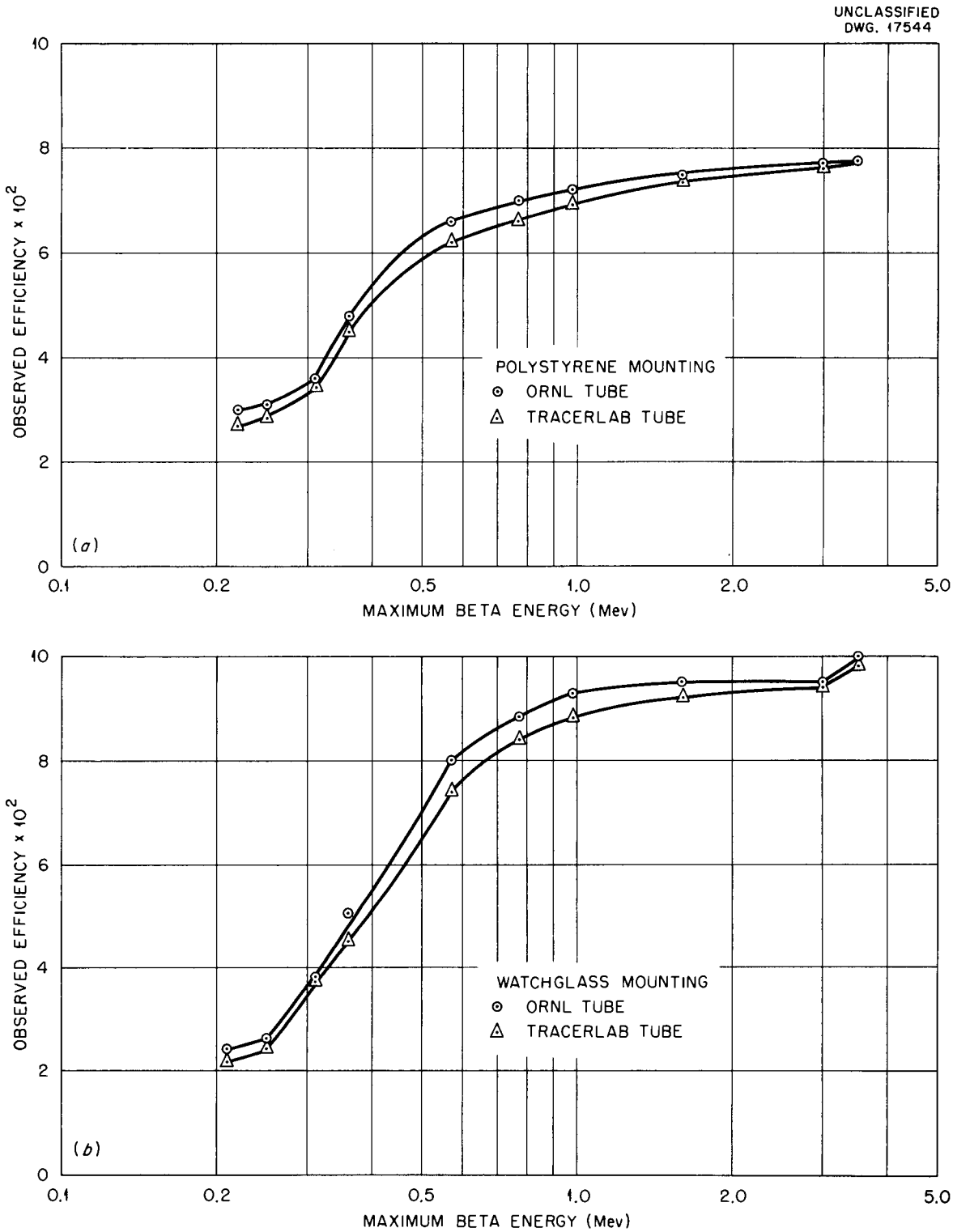

Fig. 7. Comparison of ORNL and Tracerlab G-M Tubes. Polystyrene and watch glass mountings.

Figure 7 shows the results. It is apparent that there is a difference in the efficiency of the two tubes and that the difference is not constant. It appears that only one kind of instrument can be used if the data are to be compared and expected to check.

Low-Level Radioassay Laboratory (W. A. Brooksbank, S. A. Reynolds). On the basis of a survey of background radioactivity,[21] Y-12 was chosen as the site for the proposed low-level radioassay laboratory. Space is available in Building 9733-4. The background gamma activity was surveyed within the building and it was found that a low-background area existed in Rooms 209, 210, and 212, which have been selected as adequate. The proposed floor plan is given in Fig. 8. On the basis of the floorplan and an inspection of the site, an engineering estimate has been made. A list of the necessary equipment has been compiled.

Gamma Scintillation Counters (S. A. Reynolds, W. S. Lyon). Scintillation counters for use in routine gamma measurements will soon be delivered to those analytical groups requiring

[21] W. A. Brooksbank and S. A. Reynolds, "Assay of Low-Level Samples," *Anal. Chem. Quar. Prog. Rep. June 26, 1952*, ORNL-1361, p. 17.

UNCLASSIFIED
DWG. 16308

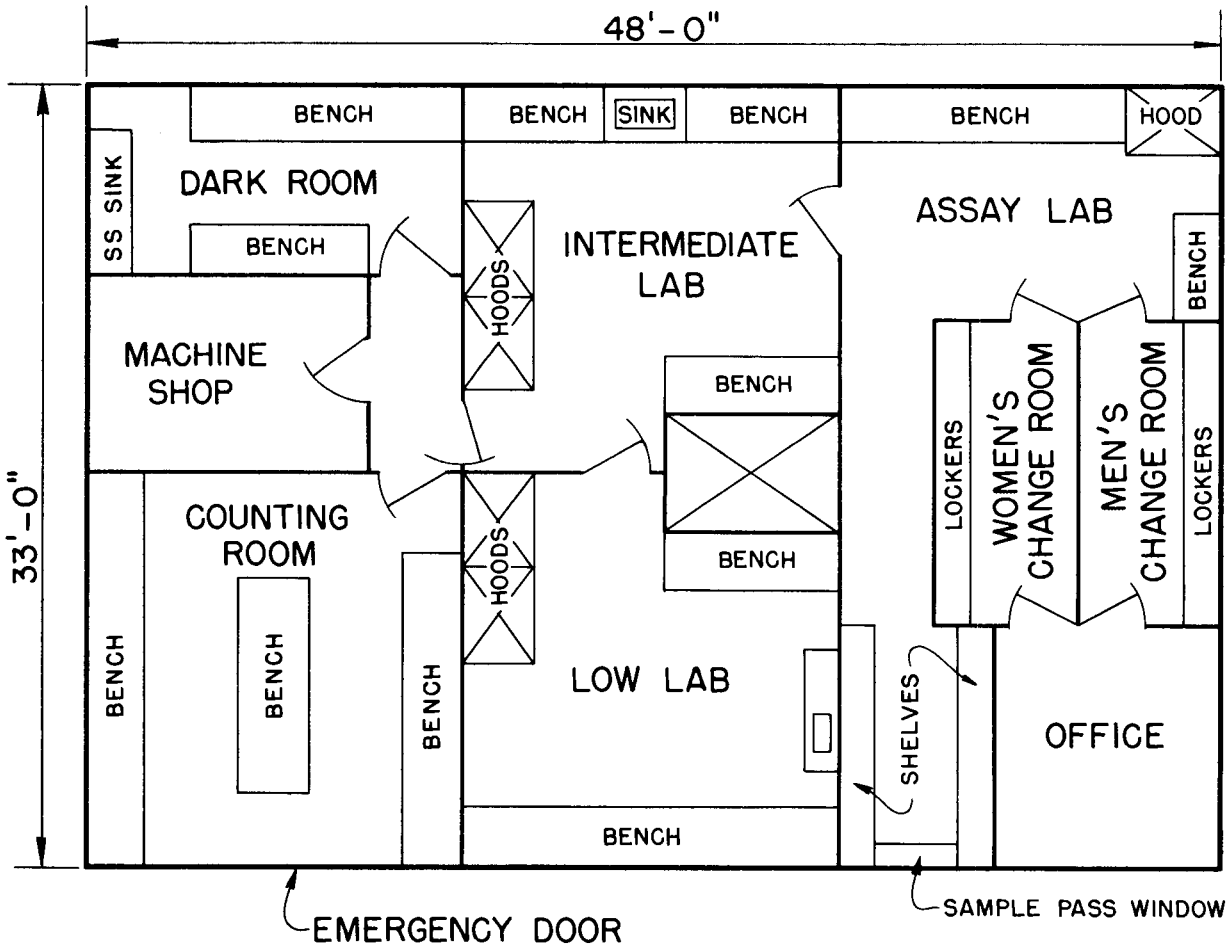

Fig. 8. Proposed Low-Level Radioassay Laboratory.

them. These counters were described previously.[22] The scintillation head is pictured in Fig. 9.

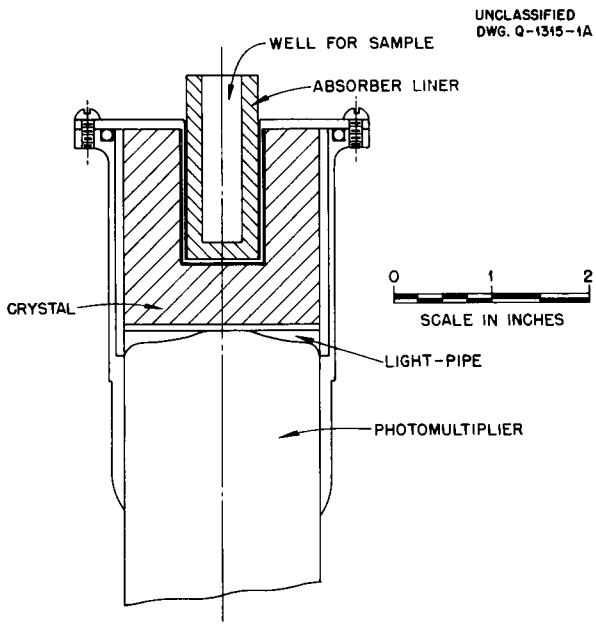

Fig. 9. High-Geometry Scintillation Counter.

Analysis for Heavy Elements

Plutonium Analysis by Alpha Counting (G. W. Smith). Data on the assay of plutonium samples by counting of alpha particles and by titration have shown that the counting method gives lower results. It was requested that this discrepancy be investigated and a suitable new method developed if the counting method was found to be in error. The work of Moore and Lyon[23] was consulted in the study of the problem.

The counting assay of plutonium is simple. It is made by diluting a solution to the desired concentration, pipeting an aliquot onto a stainless steel or platinum plate, drying, flaming, and counting the residue in a proportional alpha counter. It is well known from project data[24,25] that such a procedure, carefully followed, will give accurate counting assays, provided there is essentially no weight of residue on the plate (less than 0.1 mg/cm^2), the counter is properly standardized, and the specific activity of the sample is accurately known.

Plutonium samples originate not only from ORNL but also from Hanford and Chalk River. The different sources cause variations in g/t[26] levels among samples and result in different proportions of plutonium isotopes other than Pu^{239}. The resulting specific activities vary by as much as +20% from that of Pu^{239}. The specific activities of the samples discussed were estimated by three methods: (1) by a g/t to specific activity relationship,[27,28,29] (2) by calculation from mass spectrographic analyses, and (3) from alpha pulse analyses combined with mass spectrographic data. Representative analyses based on various estimations of specific activity are given later in this report (Table 4).

(22) D. A. Brown and W. S. Lyon, "Scintillation Counting for Purex Solutions," *Anal. Chem. Quar. Prog. Rep. March 26, 1952*, ORNL-1276, p. 26; C. J. Borkowski, "Scintillation Counter with High Gamma-Counting Efficiency," *Chem. Quar. Prog. Rep. Sept. 30, 1951*, ORNL-1153, p. 83.

(23) F. L. Moore and W. S. Lyon, *Preliminary Investigation of Methods for the Determination of Plutonium in Chalk River Dissolver Solutions*, ORNL-1101 (Nov. 30, 1951).

(24) A. H. Jaffey, J. P. Kohman, and J. A. Crawford, *A Manual on the Measurement of Radioactivity*, M-CC-1602 (Jan. 1944).

(25) P. L. Kirk, "Transuranic Elements," *Analytical Chemistry of the Manhattan Project*, Chap. XV, TID-5002 (no date).

(26) g/t = grams of plutonium per ton of uranium; an indirect measure of neutron irradiation time and neutron flux that is used to determine amounts of plutonium isotopes in samples.

(27) E. F. Westrum, Jr., R. W. Greenlee, and J. C. Hindman, *The Specific Alpha Activity of Pu^{239}, Pu^{240}, and Pile-Produced Plutonium Samples*, CC-3894 (Nov. 1946).

(28) R. E. Schreiber (ed.), *Notes on Conference on Highly Irradiated Plutonium*, LAMS-995 (Dec. 23, 1949).

(29) F. R. Bruce and D. C. Overholt, Chemical Technology Division communication to G. W. Smith, June 26, 1952.

Typical analyses of plutonium product samples furnished by L. T. Corbin of the Analytical Chemistry Division are given in Table 2. It will be noted that although there is fairly good agreement between titration and counting assays, the counting assay, when corrected for specific activity corresponding to the actual g/t level, averages 8.5% low.

In view of the above results, it appeared advisable to check the counting assay by making new dilutions and taking aliquots using calibrated volumetric equipment. At least three plates were made from each dilution. The counter used was standardized with two weightless plates that were carefully made from Pu^{239},[30] and all plates were counted sufficiently long to give at least ±0.6% reliable error. The results are given in Table 3.

The results show that although the counting assays agree satisfactorily with each other, the relative per cent deviation from the titration analysis is of the same order as shown in Table 2.

[30] Prepared by G. E. Moore and K. A. Kraus of the ORNL Chemistry Division.

TABLE 2. ANALYSES OF PLUTONIUM PRODUCT SAMPLES

SAMPLE CODE NO.	Pu CONCENTRATION (mg/ml)				RELATIVE DEVIATION IN CORRECTED COUNTING ASSAY (%)
	Titration Assay	Counting Assay[a]	Corrected Counting Assay[b]	Error in Corrected Counting Assay[c]	
RAP	9.49	8.53	7.78	-1.7	-17.9
HP-6-7	14.7	14.23	13.88	-0.8	-5.4
RGP	41.6	41.27	37.35	-4.2	-10.1
HP-10	7.9	13.32	12.92	+5.0	+63.3[d]
HPC-3	51.40	51.5	46.6	-4.8	-9.3
HPC-4	51.40	51.5	46.5	-4.9	-9.5
HP-C-(3)	9.75	10.32	9.35	-0.4	-4.1
HCP-4	44.60	45.07	40.75	-3.8	-8.5
HCP-5	44.57	47.32	42.8	-1.8	-4.0
R8-R	28.91	27.46	25.02	-3.9	-13.5
R8-S	42.48	42.11	38.20	-4.3	-10.1
R9-T	43.68	43.94	40.00	-3.7	-8.5
R9-U	32.40	34.51	31.52	-0.9	-2.8
Scrup-R3	20.07	22.20	18.77	-1.3	-6.5
Scrup-R5	11.44	12.02	10.66	-0.7	-6.1
Scrup-R5A	18.86	20.23	17.97	-0.9	-4.8[e]
Scrup-R6	24.05	26.62	22.63	-1.5	-6.2
Scrup-R4	28.7	28.82	24.92	-3.8	-13.2
			Arithmetical mean ± σ = - 8.48 ± 4.1		

[a] Calculated by using specific activity of Pu^{239}.

[b] Estimated from relationship of g/t to specific activity.

[c] Calculated by assuming titration to give correct assay.

[d] Maveric value; omitted from mean.

[e] Omitted from mean.

TABLE 3. CHECK COUNTING ANALYSES OF PLUTONIUM PRODUCE SAMPLES

SAMPLE CODE NO.	Pu CONCENTRATION (mg/ml)			RELATIVE DEVIATION OF OBSERVED COUNTING ASSAY[c] FROM TITRATION ASSAY (%)
	Titration Assay	Corrected Counting Assay[a]	Observed Counting Assay[b]	
R8-R	28.91	25.02	25.63	-11.35
Scrup-R3	20.07	18.77	19.24	- 4.1
Scrup-R5A	18.86	17.97	18.17	- 3.7

[a] As reported in Table 2.
[b] Average of at least five plates.
[c] From the assay by counting.

Because the counting assays appeared to be low, several methods of improving their accuracy were considered and some were tried. Techniques other than the usual direct evaporations, such as tetraethylene glycol spreading, slurry spreading, and electrodeposition[31] were not considered because of their time-consuming nature. The most obvious method of attempting to increase the counting rate is to use platinum instead of polished stainless steel, because platinum has a higher atomic number than stainless steel and would be expected to show more backscattering. Comparison of the two metals showed dull platinum to give a possible counting rate increase of only 0.7%. The use of polished platinum, however, gave an increase of 3% over that of polished stainless steel. The addition of HF to the plating bath[25] in order to give more uniform spreading, failed to appreciably increase the counting rate with polished platinum. Another experiment, in which HF was added in plating on dull platinum, increased the counting rate 2.2% over that obtained with polished stainless steel.

[31] D. L. Hufford and B. F. Scott, *Techniques for the Preparation of Thin Films of Radioactive Material*, NNES Vol. IV-14B, p. 1149, McGraw-Hill, New York, 1949.

Another factor that could cause low counting assays is the solids content of the samples, which would stop the alpha particles and prevent counting. Three times the usual aliquot of two of the above samples, R8-R and Scrup-R3, were plated on tared platinum plates, but no increase in weights was detectable with a macroanalytical balance. If these solutions are representative, plutonium product solutions can be considered as giving weightless plates.

Another source of error in the counting assay is the estimation of specific activity from the g/t level, which itself is usually not accurately known. If used, however, the g/t to specific activity relationship gives results accurate to only ±2 to 3%. The specific activity may also be calculated from mass spectrographic analyses, although an error in the amount of a high specific activity constituent such as Pu^{238} might cause an error of several per cent. Further, alpha pulse analyses can be used, together with mass analyses where the energies are too close to be resolved, to calculate the specific activities of plutonium-isotope mixtures. Results by the three methods are given in Table 4.

TABLE 4. COMPARISON OF PLUTONIUM COUNTING ASSAYS BASED ON DIFFERENT METHODS OF CALCULATION OF SPECIFIC ACTIVITY[a]

SAMPLE CODE NO.	TITRATION ASSAY	CALCULATED FROM SPECIFIC ACTIVITY[c]		
		Based on g/t Level	Based on Mass Analysis	Based on Alpha[b,d] Pulse Analysis
Scrup-R3	20.07	19.24	19.89	19.41
Scrup-R5A	18.86	18.17	17.92	18.24
Scrup-R-4	28.7	24.92	24.6	
Scrup-R-6	24.05	22.63	23.6	

[a] Data in milligrams of Pu per milliliter of solution.

[b] Calculation made by use of mass analysis to obtain ratio of Pu^{239} to Pu^{240}.

[c] Observed average analysis used in Scrup-R3 and Scrup-R5A.

[d] Pulse analyses preliminary; further data to be obtained.

Although the counting assays agree fairly well as calculated from the different specific activities, approximately the original discrepancy exists between the counting and titration assays.

Recently, the titration analysis has been found to be high by several per cent because of the presence of iron. This places the entire problem in a different light and may explain the existing discrepancy. Where titration analyses have been rerun on the lots in question, together with some further mass spectrometric and pulse analyses, the data may be complete and the difference explained.

Analysis of Cyclotron Products

T. H. Handley

The work on the determination of fission-yield vs. mass curves[32] has continued and is almost complete. Experimental data are being tabulated and a report of the work will appear about January 1953.

[32] T. H. Handley, "Analysis of Cyclotron Products," *Anal. Chem. Quar. Prog. Rep. March 26, 1952*, ORNL-1276, p. 33.

The first phase of the search for a stable dineutron is complete and has been reported.[33] The second phase of this search in which mechanisms of (p,t) and (t,p) reactions are being studied is still in progress; however, a report of the work should appear within a short time.

Identification of Radioelements

Impurities in Reactor-Bombarded Copper (D. J. Coombe and S. A. Reynolds). Samples of reactor-bombarded copper were submitted for identification of the long-lived activity they contained. Spectra were determined by means of the scintillation spectrometer and the gamma activity was identified as Co^{60} (Fig. 10). Cobalt-60 was also separated chemically, and the beta energy was verified by an absorption curve. Nickel-63 may be present and will be determined by Handley's method[34] of extracting the nickel dimethylglyoxime and electroplating the nickel.

[33] B. L. Cohen and T. H. Handley, *An Experimental Search for the Dineutron. Part 1: Search for a Stable Dineutron*, ORNL-1382 (Sept. 23, 1952).

[34] T. H. Handley, "Ni^{63} and Ni^{59}," *Anal. Chem. Quar. Prog. Rep. June 30, 1950*, ORNL-788, p. 29.

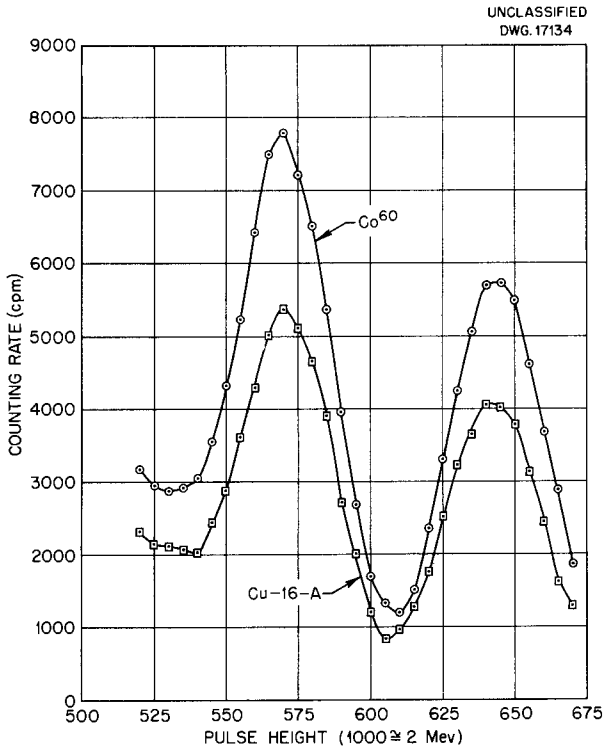

Fig. 10. Gamma Spectra of Cobalt-60 and Copper Unknown, Cu-16-A.

Solvent Extraction Methods

Separation of Americium from Yttrium (F. L. Moore). During the past quarter more experiments were made that employed the selective-stripping technique previously described.[35]

In these exploratory experiments, americium tracer (6.2×10^4 alpha cpm) and yttrium tracer (1.9×10^5 alpha cpm), both in 5-ml volumes of xylene containing varying concentrations of TTA, were stripped for 5 min with an equal volume of Versene (1.4%) in MacIlvaine's buffer (pH = 7). Table 5 indicates the difference in the behavior of americium and yttrium in this system. Work is in progress to effect a rapid quantitative separation of americium from yttrium. It is thought that the method may also be of potential value in rapid rare-earth separations.

TABLE 5. EFFECT OF TTA CONCENTRATION IN XYLENE ON THE STRIPPING OF AMERICIUM AND YTTRIUM WITH VERSENE

TTA CONCENTRATION IN XYLENE (*M*)	ACTIVITY STRIPPED (%)	
	Americium	Yttrium
0.250	18.8	0
0.125	20.8	2.2
0.063	85.0	11.8
0.038	97.0	48.0

Niobium-Tantalum Separation (F. L. Moore). A topical report on the separation of niobium from tantalum by solvent extraction with methyldioctylamine and tribenzylamine in several systems is being prepared for issue in the near future.

Electrolytic Methods

S. A. Reynolds

The application of controlled-cathode-potential electroanalysis in radiochemistry is to be investigated. Obvious applications include the separations of activities of copper, antimony, silver, and other elements.

Miscellaneous Radiochemistry

Carrying of Copper by Fluoride Precipitates (M. M. Vick[36]). A new nonsulfide scheme of analysis for the separation and identification of the metallic ions has been devised and tested qualitatively during the past three years. It appeared desirable to determine the quantitative nature of the separations. For this purpose, tagging with radioactive isotopes has been used to determine the completeness of precipitation and the amount of coprecipitation or adsorption of

(35) W. A. Brooksbank and F. L. Moore, "Transuranics in Radioisotope Preparations," *Anal. Chem. Quar. Prog. Rep. March 26, 1951*, ORNL-1088, p. 49.

(36) Research Participant from Louisiana State University.

foreign ions occurring during the group separations.

Experimentation that made use of radioactive tracers was conducted at the Louisiana State University, and data were obtained that show 98.0 to 99.5% precipitation of the fluorides of this group of cations at a pH of 5. The precipitation was relatively independent of the pH between 4.5 and 5.5.

In this work, the distribution of copper(II) ions during the precipitation of the fluoride group, that is, magnesium(II), lead(II), barium(II), calcium(II), and strontium(II) has been traced. The effect of varying the conditions of such separations, for example, pH, amount of precipitant, use of coagulants, order of addition of reagents, and use of various wash solutions, has been studied.

Foreign ions may be incorporated into a precipitate by isomorphous replacement, adsorption, mixed-crystal formation, or internal adsorption.

In isomorphous replacement, the carried ion is incorporated into the lattice of the precipitate. The distribution is continuous and the ratio of the fraction of tracer to the fraction of carrier removed is relatively independent of the precipitating conditions. Factors such as the presence or absence of excess precipitant or of highly charged ions have little effect on the amount of ion carried. This represents true coprecipitation.

In adsorption, the surface charge on the precipitate is very important. It should be opposite in sign to that of the ion to be carried. Adsorption will be sensitive to acidity because changes in pH will alter the nature of the ionic atmosphere or double-layer residing around the particles of the precipitate where any part of it exists in the colloidal state. The order of addition of reagents and the physical state or subdivision of the precipitate will also affect the extent of adsorption.

Mixed-crystal formation occurs when the ion to be carried crystallizes in the same crystal pattern as the one that acts as a carrier. It is enhanced by slow evaporation, as is also internal adsorption where the carried ion is adsorbed on the faces of growing crystals. The present work deals with rapid precipitations and centrifugations.

The distribution of copper(II) ions during fluoride precipitations of lead(II), magnesium(II), barium(II), strontium(II), and calcium(II) was followed by adding tracer amounts of Cu^{64}, whose positron emission gives rise to gamma radiation that is easily measured on a scintillation counter. The metal that was irradiated for use as tracer ion was electrolytic copper with a radioactive purity that was verified by decay measurements and scintillation-spectrometric analysis. Inactive copper carrier was added in amounts that paralleled the quantities of the fluoride-group ion used (0.1 meq.), each addition corresponded to the amounts called for in the qualitative scheme. Precipitation was effected with saturated sodium fluoride solution (approximately 1 *M*). The desired acidity was attained by the addition of small amounts of HCl (or HNO_3 in the case of lead(II)). Centrifugation was used, pH measurements were made on a Beckman pH meter, and decay was followed in each experiment by use of a standard that contained exactly the same amount of active copper as that used in the analysis.

The effect of varying pH on the amount of copper carried by the various fluorides may be seen in Table 6. To determine the effect, 0.1 meq. weights of magnesium(II), calcium(II), strontium(II), barium(II), and lead(II) were mixed, in turn, with 0.103 equivalent weights of copper(II), acid, active copper tracer, and 3 ml of saturated NaF solution. Centrifugation

was carried out for 2 min and the precipitate was washed five times with 1 ml of saturated NaF solution at a pH of 5.5.

The effect of increasing acidity in all cases, with the possible exception of lead fluoride, was to decrease the carrying of the copper ions. As the pH decreased, the fluoride ions in the double layer surrounding the PbF_2 particles were replaced by hydrogen ions, thus decreasing the attraction of the fluoride ions for the copper ions. This indicates that carrying occurred by means of adsorption rather than by isomorphous replacement.

The lead fluoride precipitate was very granular in texture as contrasted with that of magnesium fluoride. The other precipitates were intermediate in subdivision. Because the amount of surface exposed is a prime factor in adsorption, the data again indicate this form of carrying.

Precipitations were conducted in varying amounts of precipitant. The results are shown in Table 7, where data collected under comparable conditions of acidity, a pH of approximately 5.0, are shown. The volumes of saturated NaF solution used, and the fraction of copper ion present in centrifugates are indicated. A large

TABLE 6. CARRYING OF COPPER(II) BY VARIOUS FLUORIDES

CARRIER FLUORIDE	pH	FRACTION OF COPPER(II)		
		In Supernate	In Precipitate	In Washings
Magnesium(II)	5.76	0.574	0.372	0.054
	5.50	0.595	0.388	0.020
	5.40	0.739	0.181	0.080
	4.89	0.698	0.223	0.079
	4.65	0.783	0.211	0.006
Calcium(II)	5.60	0.717	0.095	0.188
	5.45	0.828	0.067	0.105
	5.20	0.836	0.073	0.091
	5.00	0.864	0.051	0.085
	4.86	0.876	0.050	0.074
Strontium(II)	5.55	0.725	0.098	0.177
	5.25	0.808	0.121	0.071
	5.20	0.856	0.090	0.054
	5.03	0.868	0.072	0.060
	4.95	0.895	0.071	0.034
Barium(II)	5.48	0.754	0.118	0.128
	5.34	0.754	0.132	0.114
	5.14	0.781	0.103	0.116
	5.00	0.837	0.100	0.063
	4.88	0.912	0.055	0.033
Lead(II)	5.50	0.994	0.004	0.002
	5.37	0.969	0.014	0.017
	5.27	0.977	0.007	0.016
	4.95	0.972	0.022	0.006
	4.90	0.949	0.038	0.013

excess of precipitant increases the carrying of the foreign ion, which verifies adsorption rather than true coprecipitation.

Studies were made of the effect of the presence of highly charged ions of the same sign as those carried. The results are shown in Table 8. Two drops of 0.1 *M* $Al(NO_3)_3$ solution were added to the precipitating mixture at comparative pH ranges. Fractions of copper in the centrifugates are shown.

The order in which the reacting substances were added was changed so that the copper ions were introduced after the sodium fluoride solution. The results taken at pH ~5 are shown in Table 9. The fractions of copper(II) that remained in the centrifugates are shown.

TABLE 7. EFFECT OF VOLUME OF PRECIPITANT SOLUTION ON CARRYING OF COPPER(II)

CARRIER FLUORIDE	FRACTION OF COPPER(II) CARRIED		
	Precipitant Solution* (ml)		
	3.0	1.0	0.1
Magnesium(II)	0.698	0.699	0.923
Calcium(II)	0.864	0.766	0.934
Strontium(II)	0.868	0.706	0.875
Barium(II)	0.873	0.717	0.900
Lead(II)	0.972	0.932	0.941

*Saturated solution of NaF.

TABLE 8. EFFECT OF HIGHLY CHARGED IONS ON CARRYING OF COPPER(II)

CARRIER FLUORIDE	FRACTION OF COPPER(II) CARRIED	
	Aluminum(III) Present	Aluminum(III) Absent
Magnesium(II)	0.946	0.783
Calcium(II)	0.951	0.876
Strontium(II)	0.966	0.895
Barium(II)	0.969	0.912
Lead(II)	0.974	0.949

TABLE 9. EFFECT OF ORDER OF REAGENT ADDITION ON CARRYING OF COPPER(II)

CARRIER FLUORIDE	FRACTION OF COPPER(II) CARRIED	
	Copper(II) Added After NaF	Copper(II) Added Before NaF
Magnesium(II)	0.958	0.827
Calcium(II)	0.927	0.836
Strontium(II)	0.941	0.842
Barium(II)	0.983	0.837
Lead(II)	0.995	0.949

The effect of washing the precipitates with various solutions was tried. Ions that form complexes with copper(II) ions were used. Versene, citrate, and tartrate solutions did not cause removal of much copper in the presence of excess fluoride ions. Results obtained at pH ~5 by washing with 1 *M* KCN solution, followed by saturated NaF solutions, are shown in Table 10.

The carrying of copper(II) on fluoride precipitates of magnesium(II), calcium(II), strontium(II), barium(II), and lead(II) has been shown to be dependent on the pH of the solution, the amount of excess precipitant, and the order of addition of the reagents. The presence of highly charged cations, even in very small amounts, decreased the contamination of the precipitates by copper(II) to a significant extent. Washing the contaminated precipitates with solutions of sodium fluoride, Versene, citrate, and tartrates did not remove more than 50% of the adsorbed copper. Use of 1 *M* potassium cyanide solution removed up to 95% of the copper(II) that remained adsorbed on the precipitates.

Heat could not be used to coagulate the precipitates because it caused a deposition of the insoluble copper compound. Attempts to utilize homogeneous precipitation, brought about by adding the precipitant to a strongly acid solution and subsequently warming with urea to bring about optimum pH conditions, resulted in precipitation of a copper compound, possibly the fluoride. Changing the nature of the hydrophilic colloid by the addition of alcohol and acetone did not meet with favorable results.

Adsorption of copper(II) on fluoride precipitates may be held to a minimum by utilizing a pH of approximately 5.0 and by adding a small amount of aluminum(II) to the freshly precipitated solution. If carrying of tracers is desirable, magnesium fluoride in neutral or slightly acid solutions should be efficient in the presence of a fairly large excess of fluoride ions. Since most cations form slightly soluble fluorides, it is felt that MgF_2 can be useful as a scavenger or carrier in a large number of instances. This should be especially true where the ion to be carried resembles magnesium(II), for example, lithium(II).

Similar work is being done on iron(II), cobalt(II), cadmium(II), and nickel(II) in the radiochemical laboratory of the Louisiana State University. This will be continued until the quantitative nature of the new qualitative scheme has been established.

Teaching and Training (S. A. Reynolds, W. S. Lyon). At the request of Du Pont and ORNL personnel, another "Analytical Radiochemistry Survey Course" was given during the period August 11 to September 19. Approximately 50 people attended regularly. Fundamentals of radiochemistry, measurement methods, and analytical separations techniques were discussed.

D. A. Brown, a Du Pont chemist, has continued his training in the group. M. M. Vick of the analytical chemistry

TABLE 10. EFFECT OF TYPE OF WASH SOLUTION ON THE CARRYING OF COPPER(II) ON BARIUM FLUORIDE

WASH SOLUTION	FRACTION OF COPPER(II)		
	In Supernate	In Precipitate	In Washings
1*M* KCN–Saturated NaF	0.783	0.012	0.205
Saturated NaF	0.781	0.103	0.116

staff of the Louisiana State University worked as a research participant during the months of June, July, and August, studying radiochemical techniques and participating in the above-mentioned course.

ACTIVATION ANALYSIS

G. W. Leddicotte

H. A. Mahlman N. D. Lee[37]
T. G. Harmon T. E. Strain
W. A. Brooksbank[38]

Irradiation Facilities (N. D. Lee). The assignment to the Analytical Chemistry Division of the vertical, peripheral hole, V-2, of the LITR was discussed in an earlier report.[39] The neutron flux and the temperature have been determined at the base of the hole. The 2.5-h Mn^{56} activity that is produced by the nuclear reaction, $Mn^{55}(n,\gamma)Mn^{56}$, was the basis for the analysis. A number of samples of Co-Al-Mn monitor alloy were analyzed following a 3.0-hr irradiation of the metal in this facility. After the irradiation, the samples were placed in counting tubes and the gamma radiation measured in a high-pressure ionization chamber.[40] The decay energy of the Mn^{56} gamma radiations[41] was followed by a measurement of the radioactivity at various intervals. From these data it was found that the flux for this facility is of the order of 2×10^{11} neutrons/cm^2·sec. The temperature at the base of the hole was measured by means of a long thermocouple and a recording instrument. The maximum temperature recorded was 120°C.

It is felt that this hole is an adequate auxiliary facility for irradiating samples for activation analysis when other existing facilities, such as vertical hole 12 of the ORNL Graphite Reactor, are not available. It is quite adequate for the irradiation of samples containing trace amounts of those elements having a significant cross section and is especially useful for samples having physical properties that make extreme caution in handling necessary.

Measurement of Neutron Flux in Vertical Holes of the LITR (G. W. Leddicotte). In a joint project with the Operations Division, the neutron fluxes in the vertical peripheral holes, known as V-1, V-3, and V-4, were determined by the method described above for hole V-2. The effective fluxes of these facilities are given in Table 11.

TABLE 11. FLUX OF VERTICAL HOLES OF THE LOW INTENSITY TRAINING REACTOR

HOLE DESIGNATION	FLUX x 10^{-11} (neutrons/cm^2·sec)*
V-1	1.90
V-2	1.95
V-3	1.20
V-4	1.10

*Each value an average of three results.

Determination of Trace Elements by Means of Their Short-Lived Radioisotopes (W. A. Brooksbank, G. W. Leddicotte). Leddicotte and Reynolds[42] have reported the use of radioisotopes of $t_{1/2}$ = 30 m or longer as a means of determining trace amounts of many elements. Their tabulation can now be

(37) On loan.

(38) Special assignment.

(39) G. W. Leddicotte, H. A. Mahlman, J. Y. Ellenberg, and N. D. Lee, "Availability of Additional Irradiation Facilities for Neutron Activation Analysis," *Anal. Chem. Quar. Prog. Rep. June 26, 1952*, ORNL-1361, p. 20.

(40) C. J. Borkowski, "Instruments for Measuring Radioactivity," *Anal. Chem.* **21**, 348 (1949).

(41) K. Way, L. Fano, M. R. Scott, and K. Thew, *Nuclear Data*, N.B.S. Circular 499, p. 50 (Sept. 1, 1950).

(42) G. W. Leddicotte and S. A. Reynolds, "Activation Analysis with the Oak Ridge Reactor," *Nucleonics* 8, No. 3, 62 (1951).

enlarged to include radioisotopes of $t_{1/2}$ = 1 to 30 m. These stable isotopes and their active nuclides are given in Table 12. The sensitivity of detection of these elements is included as part of the tabulation. It is defined as the least amount of the element that will produce sufficient radioactivity (40 dps of beta activity, or equivalent) to be determined by radioassay methods with Geiger-Mueller counters. This activity is the amount produced in a saturation irradiation at a reactor flux of 5×10^{11} neutrons/cm^2·sec.

In order to measure the decay of most of the short-lived radioisotopes shown in Table 12, special counting equipment that is continuously recording and of instantaneous response is necessary. The present equipment for these analyses is a bell-type proportional tube that has a gold-foil window of 1.85 mg/cm^2 thickness. It is mounted in a standard counting shield. The ionization current pulses are fed to an ORNL model A-1 linear amplifier through an A-1A preamplifier. The output from this pulse-height selector feeds into an ORNL model Q-861 logarithmic count rate meter and is recorded as counts per minute on a Brown single-pen recorder of 0- to 10-mv range. Because the measurements are usually made by a direct determination, the results are calculated by resolving the decay curves recorded on the Brown strip chart.

Determination of Trace Amounts of Vanadium in Petroleum Hydrocarbons (W. A. Brooksbank, G. W. Leddicotte). An isotope of very short half life has been used to determine trace amounts of vanadium in motor oils and related petroleum hydrocarbons. This is the first known application of radioactivation analysis to the determination of vanadium and is especially unusual because the vanadium radioisotope used has such a short half life. The radionuclide, V^{52} ($t_{1/2}$ = 3.9 m), is produced by the slow-neutron reaction (n,γ) on V^{51}. Vanadium-51 emits a negative 2.7-Mev beta particle and a 1.45-Mev gamma ray.[43]

The motor oil samples were analyzed as follows. An aliquot was transferred to a quartz ampoule that was then sealed, placed in a "rabbit," and irradiated for 7 min, or approximately 80% of saturation. After the irradiation, duplicate portions of the sample were put into small, tared, porcelain dishes, and the beta activity was measured in the equipment described above. The decay of the samples was followed until the vanadium activity had decayed. A reference-standard sample that contained a known amount of vanadium was irradiated and counted under the same conditions. The results of Table 13 were obtained by comparing the activity of the samples with that of the standard.

Determination of Trace Amounts of Aluminum, Mercury, Silver, and Sulfur (W. A. Brooksbank, G. W. Leddicotte). An investigation of the use of the short-lived radioisotopes of aluminum, mercury, silver, and sulfur to determine traces of these elements in fine chemicals, cellulosic materials, petroleum products, etc. is under way. The following reactions will be employed: $Al^{27}(n,\gamma)Al^{28}$, $Hg^{204}(n,\gamma)Hg^{205}$, $Ag^{107}(n,\gamma)Ag^{108}$, and $S^{36}(n,\gamma)S^{37}$. The half lives, activation cross sections, decay energies, and sensitivities of detection of the radionuclides are given in Table 12.

Determination of Trace Amounts of Uranium (H. A. Mahlman, G. W. Leddicotte). Work on the determination of trace amounts of uranium was continued. A sample of Bartow clay, which reportedly had a uranium concentration of 250 ppm, was obtained, and the uranium was determined by a measurement of the neptunium radioactivity produced by the slow-neutron reaction $U^{238}(n,\gamma)U^{239}$. The U^{239} decays with a

(43) K. Way, L. Fano, M. R. Scott, and K. Thew, *op. cit.*, p. 46.

TABLE 12. SHORT-LIVED (1- to 26-m) ISOTOPES THAT MAY BE USED IN ACTIVATION ANALYSES

STABLE ISOTOPE	ABUNDANCE (%)	ACTIVE NUCLIDE	$t_{1/2}$ (m)	CROSS SECTION σ (barns)	ENERGY (Mev)		SENSITIVITY OF DETECTION (μg)
					β-Radiation	γ-Radiation	
Mg^{26}	11.3	Mg^{27}	9.6	50 ± 10(mbarns)	0.9 1.8	1.0 0.8 0.6	6.1
Al^{27}	100	Al^{28}	2.3	0.21 ± 0.04	3.0	1.8	0.0002
S^{36}	0.016	S^{37}	5	0.14 ± 0.04	4.3 1.6	2.6	190
Ca^{48}	0.18	Ca^{49}	8.5	1.1 ± 0.1	2.7	2.7	0.4
Ti^{50}	5.3	Ti^{51}	6	0.14 ± 0.03	1.6		0.9
V^{51}	99.8	V^{52}	3.9	4.5 ± 0.9	2.7	1.45	0.0015
Co^{59}	100	Co^{60}	10.7	14 ± 3	1.56 (10%)	0.06 (90%)	0.0006
Cu^{65}	31.0	Cu^{66}	4.3	1.8 ± 0.4	2.58	1.32	0.016
Zn^{70}	0.63	Zn^{71}	2.2	85 ± 20(mbarns)	2.1		17.5
Ga^{69}	60.2	Ga^{70}	20	1.4 ± 0.3	1.65		0.01
Rb^{87}	27.2	Rb^{88}	17.5	0.12 ± 0.03	5.0		0.36
Nb^{93}	100	Nb^{94}	6.6	1.0 ± 0.5	1.3 (0.1%)	0.04 (99.9%)	0.01
Mo^{100}	9.5	Mo^{101}	15	0.18 ± 0.5	1.9-2.2	0.9	0.80
Rh^{103}	100	Rh^{104m}(a)	4.3 44(s)	12 ± 2	0.07 (e^-)(b) 2.6	0.08 0.9	0.001
Pd^{110}	13.5	Pd^{111}	26	0.4 ± 0.1	3.5		0.27
Ag^{107}	51.9	Ag^{108}	2.3	44 ± 9	2.8		0.0006
In^{113}	4.2	In^{114}	72(s)	2.0 ± 0.6	2.0	0.715	0.18
Sb^{123}	42.8	Sb^{124}	21 1.3	30 ± 15(mbarns) 30 ± 15(mbarns)	2.38 2.04 1.17	0.36 1.86	0.13
Gd^{160}	21.8	Gd^{161}	3.6	0.15 ± 0.03	1.5	0.37	0.64
Dy^{164}	28.2	Dy^{165m}(a,c)	1.3	2600 ± 300		0.11	0.00003
Ta^{181}	100	Ta^{182m}(a)	16.4	30 ± 10(mbarns)	0.2	0.18	0.80
Ir^{191}	38.5	Ir^{192m}(a)	1.4	260 ± 100		0.06	0.0003
Hg^{204}	6.8	Hg^{205}	5.5	0.43 ± 0.10	1.62		0.93
Tl^{205}	70.5	Tl^{206}	4.2	0.10 ± 0.03	1.8		0.38

(a) Metastable isomer of measured half-life of either a stable or unstable isotope.
(b) Conversion electron.
(c) Decays to Dy^{165} (2.4h) as Dy^{164} (n,γ) $Dy^{165m} \xrightarrow[1.3m]{\gamma} Dy^{165}$ $(\beta^-,\gamma;\ t_{1/2} = 2.4h)$.

TABLE 13. DETERMINATION OF TRACE AMOUNTS OF VANADIUM IN MOTOR OILS BY ACTIVATION ANALYSIS*

SAMPLE	VANADIUM (ppm)
1	0.7
	0.7
2	1.0
	0.9
3	0.7
	0.7
4	1.0
	1.2
5	1.0
	0.9

*Results reported by requestor, <1 ppm.

23.5-m half life and a negative beta emission to produce Np^{239}, which decays with a 2.3-d half life.[44] The analytical procedure used in this assay was described earlier.[45] Duplicate assays on approximately 30 mg of ore, irradiated for 62 hr in the graphite reactor at a flux of approximately 8×10^{11} neutrons/cm^2·sec, gave results of 244.1 and 252.9 ppm. The average of these determinations is 248.5 ppm, which is a reasonably good check with the reported value.

(44) *Ibid.*, p. 268.

(45) H. A. Mahlman and G. W. Leddicotte, "Determination of Natural Uranium (U^{238}) by Radioactivation Analysis," *Anal. Chem. Quar. Prog. Rep. June 26, 1952*, ORNL-1361, p. 21.

This procedure has also been applied to the determination of uranium on filter paper. This filter-paper determination of uranium is a joint project of the Ionic Research and Development and the Activation Analyses groups to develop paper chromatographic and radioactivation analysis techniques for the determination of submicrogram amounts of uranium in process solutions. In one series of analyses, 0.324 μg of U^{235}-depleted U^{238} was deposited in 100-μl aliquots from a Greiner buret onto aluminum-foil squares and filter-paper (Whatman No. 1) strips. Each sample was wrapped separately in aluminum foil, folded into a small package, and placed in an irradiation container. Similarly, a second series of samples, deposited on filter paper, was prepared. These were folded, placed in quartz tubes, and then in the irradiation container. Blank sections of the aluminum foil and the filter paper were also included in the experiment. The results of the work are summarized in Table 14.

Incomplete dissolution of the aluminum foil and filter paper by the acid, incomplete oxidation and reduction of the neptunium, and mechanical losses are possible sources of error in this determination. On the basis of these analyses, it is felt that a quartz tube is the best encasement for the irradiation of such samples.

It was also of interest that the total Np^{239} activity for each sample

TABLE 14. DETERMINATION OF TRACE AMOUNTS OF URANIUM ON FILTER PAPER*

SAMPLE	ENCASEMENT	NUMBER OF ANALYSES	URANIUM RECOVERED (μg)**
Uranium on aluminum foil	Aluminum foil	9	0.290
Uranium on filter paper	Aluminum foil	9	0.310
Uranium on filter paper	Quartz tube	10	0.327

*0.324 μg of uranium taken.

**Average values, corrected for blanks.

was of the order of 10^4 dps, as measured by a scintillation counter of the type described by Borkowski.[46] The statistics at this count level are good. Additional work is proposed in order to show that it should be possible to determine amounts of uranium much smaller than those used in the above experiments. It has been estimated that as little as 10^{-3} μg of uranium may be determined with an accuracy of ±10%.

Assay of Aplite Ore for Trace Elements (H. A. Mahlman, G. W. Leddicotte). Aplite ore contains a quartz monzonite that is supplied to the glass trade for use in the manufacture of laboratory glassware. A sample of the ore was submitted from a mining operation in the eastern United States for a qualitative determination of trace elements by activation analysis. The components reported by the requestor are listed in Table 15. All of the elements present, except Al, Ti, Mg, V, Li, Pb, and B, are readily detected by activation analysis by using the qualitative procedure suggested by Handley.[47] A typical analysis consisted of irradiating separate portions of the sample for time intervals of 16 hr, 62 hr, and 1 week. After the irradiation, each portion was put into solution by means of a HF-HNO_3 mixture, group carriers were added, and specific group separations were made according to Handley's scheme. All elements that produce, under neutron irradiation, radioisotopes that have half lives sufficiently long to be included in this scheme were detected qualitatively. Those elements that appeared in the requestor's analysis as faint traces were detected and found to be in excess of the lower limit of detection for each: Sn, 0.2 μg; Ni, 0.03 μg; Ga, 0.01 μg; and Cr, 0.2 μg.

In addition, traces of hafnium and tantalum were found and determined quantitatively. Following a 62-hr bombardment, the 17-h activity of Zr^{97} was allowed to decay. After this time interval, a quantitative separation of hafnium was made through the use of the typical radiochemical procedure for zirconium separation.[48] Standardized zirconium carrier was used to carry the hafnium activity. The activity found in the separated zirconium oxide was compared with the activity found in a control sample of HfO_2. The results of two analyses were 533 and 541 ppm.

Similarly, an analysis was made for trace amounts of tantalum. After a 62-hr irradiation, the sample was dissolved, standard niobium carrier was added as a specific carrier for

(46) C. J. Borkowski, "Scintillation Counter with High Gamma-Counting Efficiency," *Chem. Quar. Prog. Rep. Sept. 30, 1951*, ORNL-1153, p. 83.

(47) T. H. Handley, "Qualitative Analysis Scheme," *Anal. Chem. Quar. Prog. Rep. Jan. 10, 1951*, ORNL-955, p. 47.

(48) D. N. Hume, N. E. Ballou, and L. E. Glendenin, "Zirconium," *A Manual of the Radiochemical Determination of Fission Product Activities*, CN-2815, p. 27 (June 30, 1945).

TABLE 15. REQUESTOR'S ASSAY OF APLITE ORE SAMPLE

CLASSIFICATION	CONCENTRATION RANGE (%)	COMPONENT
Major	> 25	Si, Al
Intermediate	5 to 25	Na, Ca
Minor	0.10 to 5	Fe, Ti, K, Mg
Trace	0.0001 to 0.10	P, Ba, Mn, Zr, Cu, Mo, V
Faint trace	< 0.0001	Li, Sn, Pb, Ni, B, Ga, Cr

the tantalum, and the solution was chemically processed according to the typical niobium procedure.[49] The activity found in the separated Nb_2O_5 was compared with the activity found in a control sample of tantalum metal. The average result of two analyses was 161 ppm. The aplite ore assay results by activation analysis were confirmed by decay and absorption studies.

Modifications to Existing Analytical Procedures for Trace Element Analysis (H. A. Mahlman, G. W. Leddicotte). The analytical procedures used to determine trace quantities of arsenic and nickel have been improved. Also, sodium sulfide and ammonium sulfide have been successfully substituted for the less convenient hydrogen sulfide in sulfide precipitations.

Determination of Arsenic. High yields and difficulty in mounting sulfide precipitates were experienced in the use of the existing procedure for arsenic. Precipitation of the arsenic as the magnesium ammonium arsenate[50] is now being considered. It is found that magnesium ammonium arsenate precipitates are easily filterable, give quantitative separation of arsenic in yields of the order of 70 to 80%, and are satisfactorily free of contaminating radioactivities. For example, the most commonly encountered activity, Na^{24}, was coprecipitated to the extent of only 0.009%, and Cu^{64} to only 0.011%. The use of additional scavenging steps should completely eliminate any inference from these ions. It was shown that when such activities as radioantimony or large excesses of Group II radioions are present, arsenic can be sublimed completely as arsenious chloride without interference from any of these radioions. The arsenious chloride can then be absorbed in NaOH solution and precipitated as magnesium ammonium arsenate for weighing and counting.

Determination of Nickel. The present procedure for the determination of trace amounts of nickel has not always been successful in routine use. Low yields and difficult filterability of the nickel dimethylglyoxime have been experienced. These problems have been solved in the following manner. The amount of dimethylglyoxime reagent (1% dimethylglyoxime in alcohol) was increased to give at least a fourfold excess of that required for complete precipitation of the nickel. The difficulty in filtering the nickel dimethylglyoxime precipitate was overcome by dissolving the final precipitate of nickel dimethylglyoxime in in HCl and diluting to 10 ml with water and alcohol. The alcohol dissolved the excess precipitate of dimethylglyoxime (white) which, because of its low solubility, precipitates in water. A 2-ml aliquot of this solution is pipeted into a tube that is suitable for use in a gamma scintillation counter. The yield of the experiment is then determined by taking another aliquot of the solution of nickel dimethylglyoxime and proceeding with the colorimetric dimethylglyoxime determination of the nickel.[51]

The combination of the dimethylglyoxime precipitation and the colorimetric method has permitted complete analysis for nickel within a short time after discharge of the irradiated sample from the reactor. The results obtained are considerably more accurate because good counting statistics, the basis for trace determinations, are achieved. Also, there is considerably more ease in handling the final solution containing the radioactive nickel ions.

Use of Sodium Sulfide and Ammonium Sulfide for Sulfide Precipitations. Saturated Na_2S and $(NH_4)_2S$ solutions

(49) Hume, Ballou, and Glendenin, "Columbium," *op. cit.*, p. 31.

(50) N. H. Furman (ed.), *Standard Methods of Chemical Analysis*, Vol. 1, 5th ed., p. 96, Van Nostrand, 1939.

(51) E. B. Sandell, *Colorimetric Determination of Traces of Metals*, 2nd ed., p. 469-476, Interscience, New York, 1950.

have replaced hydrogen sulfide as precipitating agents for the acid and basic sulfide elements. These reagents are less offensive and can be added in solution rather than in gaseous form. A solution of Na_2S has been used in all the procedures, other than the sodium procedure, which incorporates a sulfide scavenging step. When sodium is the element to be determined, $(NH_4)_2S$ solution has been used for the sulfide precipitations.

Determination of Trace Amounts of Rare Earths by Ion-Exchange Procedures (W. A. Brooksbank, G. W. Leddicotte). The use of ion-exchange columns for the determination of trace amounts of individual rare earths is being continued. Permanent equipment is being obtained for routine separations by the method of Boyd and Ketelle[52] for determining trace rare earths in human tissue and ores.

Determination of Trace Amounts of Metals by Electrodeposition Procedures (H. A. Mahlman, G. W. Leddicotte). Theoretical consideration is currently being given to the electrodeposition of various metallic ions, especially nickel and copper, as a procedure in activation analysis. When the reduction potentials of two or more elements are too close for an efficient electroseparation, complexes and/or preliminary precipitation separations of the elements may be used. Because yield determinations are made in all instances, complete separation of the element under investigation need not be effected, therefore sufficient yields may be obtained in 10 to 15 minutes.

New Applications of Activation Analyses (G. W. Leddicotte). Recently public announcement was made of the activation analysis service for the determination of trace elements. Since that time, inquiries have been received regarding the suitability of the method for the determination of trace elements in sea water, grains, grasses and grass juices, foods and related products, transistors, and human tissues.

SPECTROCHEMICAL ANALYSES

C. Feldman

J. Y. Ellenburg M. Murray
A. J. Estepp M. K. Wittels

Determination of Traces of Zinc in Copper. In connection with Solid State Division studies of the physical properties of copper, it was desired to know whether certain rods of neutron-irradiated copper had contained zinc before irradiation, that is, whether their total zinc content after the irradiation was greater than could be expected to result from the $Cu^{64} \xrightarrow[12.8\,h]{\beta^-} Zn^{64}$ reaction. An analytical sensitivity of approximately 4 μg of zinc per gram of copper was required.

Zinc in copper can be detected spectrographically at this concentration by directly burning a large pellet of copper in the d-c arc. However, synthetic metallic standards would be needed in order to interpret the results, and the preparation of these standards would be difficult and the results uncertain. Because standards can be easily synthesized in the form of solutions, it was decided to work with solutions.

The comparatively poor sensitivity of the spectrographic method for zinc, especially in solution techniques, made it necessary to concentrate the zinc. Electrolytic deposition of the copper, followed by evaporation of the electrolyte, was the procedure chosen. The details of the spectrographic method for traces of zinc in copper have been recorded.

[52] B. H. Ketelle and G. E. Boyd, "The Exchange Adsorption of Ions from Aqueous Solutions by Organic Zeolites. IV. The Separation of the Yttrium Group Rare Earths," *J. Am. Chem. Soc.* **69**, 2800 (1947).

Determination of 0.2 to 10.0% Niobium in Thorium-Niobium Alloy. Examination of the MIT Wavelength Tables indicated that it should be possible to determine niobium in the presence of thorium. Since working curves for niobium in solution were already available, it was decided to perform the analysis on a solution of the alloy. A procedure has been developed and recorded whereby the solution was prepared, exposed spectrographically by the porous-cup method, the intensity ratio

$$\frac{\text{Nb } 2950.9}{\text{Co } 3044.0} \quad \text{or} \quad \frac{\text{Nb } 3094.18}{\text{Co } 3044.0}$$

measured, and the niobium concentration of the solution was obtained from an appropriate working curve.

Extension of Operating Concentration Range for Iron, Nickel, Chromium, Manganese, Calcium, and Magnesium Solutions. In order to avoid foreign-element effects and thus permit the use of a single set of working curves on a wide variety of dissolved samples, it has been customary to make all determinations in the lowest possible concentration range. However, if the original concentration is unknown or the concentrations of several components vary widely, several dilutions are required, each with a separate exposure. If extreme dilutions must be made for the determination of high concentrations of iron, chromium, and magnesium, much of the accuracy and precision that is otherwise attainable is lost through the relative importance assumed by the blank correction.

Experience has shown that foreign-element effects are negligible among iron, nickel, chromium, and manganese at concentrations of 200 ppm or less. Therefore a set of standard solutions containing iron, nickel, chromium, and manganese in the relative proportions and concentration ranges usually encountered was prepared. Each solution contained 75 ppm of Co^{++} as an internal standard. The lines given in Table 16 were selected for use in the concentration ranges indicated.

The MIT Wavelength Tables showed the lines to be free of interference by commonly encountered elements; however, to make sure that there were no interferences among the four elements, separate solutions of each, at or above the highest concentration listed, were analyzed under the conditions indicated. No possible interferences were found for the line-pairs given.

Determination of Samarium in Europium. In connection with the purification of europium by the zinc-amalgam reduction method, it was desired to follow the changes of samarium concentration in successive stages in the purification.

The samples at hand were essentially free of impurities other than samarium. The copper-spark technique was the only exposure technique found to give sufficient sensitivity for the samarium concentration of interest. Standards were prepared by evaporating solutions, each of which contained 100 μg of europium plus 0.63, 1.25, 2.50, 5.00 or 10.0 μg of samarium as the chlorides, on the ends of copper rods. The sample was treated similarly. The corresponding values for the per cent samarium as the metal were thus determined. The electrodes were sparked for 75 sec in order to provide sufficient spectral background to overcome emulsion inertia. A 30-μ fixed slit was used; the film was Eastman type SA1. The logarithm of the intensity ratio Sm 3568.26/Eu 3542.17 was plotted against the logarithm of the samarium-to-europium concentration ratio. Although minor lines of cerium, protactinium, thorium, and dysprosium might interfere with these lines, none of these elements was present. In the first two samples analyzed the samarium-to-europium ratios were 5.2 and 1.8.

TABLE 16. INTERFERENCE-FREE LINES OF IRON, NICKEL, CHROMIUM, AND MANGANESE IN A MODERATE CONCENTRATION RANGE

ELEMENT	WAVELENGTH OF LINE (Å)	USEFUL RANGE OF CONCENTRATION FOR A 3-MIN, POROUS-CUP EXPOSURE USING EASTMAN SAI FILM (ppm)	WAVELENGTH OF COBALT INTERNAL-STANDARD LINE (Å)
Iron	2599	0.40 to 12.5	2587
	2598	0.79 to 25	2587
	2395	3.13 to 50	2397, 2411
	2410	6.25 to 200	2397, 2411
	2411	6.25 to 200	2397, 2411
Nickel	2316	3.13 to 50	2324, 2397
	3461	3.13 to 50	3462
	2394	6.25 to 100	2397
	2334	25 to 200	2324, 2397
Chromium	2677	0.79 to 12.5	2587
	4254	3.13 to 25	3894
	4274	3.13 to 25	3894
	2971	6.25 to 100	2587
	2971	12.5 to 100	2587
Manganese	2939	0.79 to 12.5	2587
	2933	0.79 to 12.5	2587
	4030	1.57 to 12.5	3894
	4033	3.13 to 25	3894
	4034	3.13 to 25	3894

INORGANIC PREPARATIONS

D. E. LaValle R. H. Sampley

Solid Solutions of Uranium Trihalides in Lanthanum Halides (D. E. LaValle). The program of preparing solid solutions of uranium trihalides in $LaCl_3$ for the Nuclear Physics and Low Temperature group of the Physics Division was continued. The success with a 10 mole % solution of UF_3 in the study of the magnetic susceptibility of trivalent uranium at low temperatures led to a request for a similar solution of UCl_3.

A special apparatus was set up for the synthesis of UCl_3. The apparatus was also used for the purification of the starting materials. The gaseous H_2 and HCl that were required were purified by procedures that essentially followed those of Newton.[53] The hydrogen was passed over uranium turnings at 700°C, and HCl gas over anhydrous UCl_3 at 400°C. The $LaCl_3$ was fused in an atmosphere of purified HCl gas, placed in a porcelain boat, and uranium chips in the quantity necessary to give a 10 mole % solution of UCl_3 were distributed over the surface of the $LaCl_3$. The uranium was converted to UH_3 by heating to 250°C in a combustion-tube furnace under an atmosphere of the purified hydrogen. Purified HCl gas was then introduced and the hydride converted to the chloride at 400°C. The furnace was

[53] A. S. Newton, *The Purification of Some Laboratory Gases*, MDDC-724 (Declassified Jan. 1, 1947).

removed and brought up to a temperature of 900°C, then the tube and materials, with the HCl gas still passing through, were again inserted into the furnace and the materials fused. Some UCl_3 sublimed and deposited in the tube.

A 2.5 mole % solution of a uranium trihalide in $LaCl_3$ was required for further experiments in the trivalent-uranium magnetic-susceptibility studies at low temperatures. Because UF_3 could be more simply and rapidly prepared than other uranium trihalides, it was decided to use it again. The solution was made in the same manner as the original,[54] that is, by fusing $LaCl_3$ and UF_3 in a vacuum. The Physics Division succeeded in cooling the product to temperatures below 1°K.

Some UF_3 is converted to UCl_3 during the fusion and some of the UCl_3 thus formed sublimes. A loss of trivalent uranium results. Therefore an analysis of the product for trivalent uranium is being made.[55]

ANALYTICAL CONTROL OF THE HRE SOLUTION

R. H. Powell

The development and evaluation of the Densitrol unit and metal plummets for use therein has been concluded. The unit has performed most satisfactorily in the determination of the specific gravity and, consequently, the uranyl sulfate concentration of HRE fuel solutions under operating mockup conditions. The work is reported elsewhere[56] and in a topical report entitled "Evaluation of Princo Densitrol System and Internally Pressurized Metal Plummets for Automatic Remote Measurement of Specific Gravity as Related to Concentration of Uranyl Sulfate Solutions, at 50°C and 1000 psi, HRE Mock-Up."

OPTICAL AND ELECTRON MICROSCOPY

T. E. Willmarth
F. D. McNeer I. H. Gary

Type 347 stainless steel capillary tubes that had failed during test experiments were examined for the HRP. Also, microscopic and electron-diffraction studies were made of various types of (1) stainless steel samples that had been exposed to UO_2F_2 solutions or subjected to several conditioning treatments, (2) type 347 stainless steel that had been electrolytically defilmed or exposed to UO_2F_2 and NaF solutions, and (3) corrosion products that were filtered from UO_2SO_4 solutions after the solutions had been in HRE test loops, operating at 250°C, for short time intervals.

Metallographic examinations for other groups included a progressive study of stainless steel samples before and after decontamination treatment, observations of changes in structure of type 347 stainless steel at or near weld zones of gold-plated cobalt, and electron-microscopic studies of nodular pearlite in steel.

Crystallographic studies were made of unknown precipitates that were suspected to contain UO_3. Photomicrography and electron-microscopy examination was made of (1) $UO_3 \cdot H_2O$, (2) deposits on irradiated aluminum, (3) surface precipitates on titanium after exposure to UO_2SO_4 at high temperatures, (4) LiCl in the presence of an organic solvent, and (5) various Dowex-50 exchange resins. Results of most of these studies will be reported by the originators of the work.

---

(54) D. E. LaValle, "Solid Solutions of the Uranium Trihalides in Lanthanum Halides," *Anal. Chem. Quar. Prog. Rep. June 26, 1952*, ORNL-1361, p. 26.

(55) J. M. Chilton, "Determination of Uranium(III) in the Presence of a Large Excess of Lanthanum Trifluoride," this report.

(56) "Concentration Measurement," *HRP Quar. Prog. Rep. Oct. 1, 1952*, ORNL-1424, p. 9.

SERVICE ANALYSES

A summary of the service analyses made at the X-10 Analytical Chemistry Division laboratories is given in Table 23.

IONIC ANALYSES

P. F. Thomason

The service work of the Ionic Research and Development group was normal for the past quarter. It consisted primarily of analyses of UO_2SO_4 solutions and solid eutectics of UF_4 for corrosion products and uranium. The methods used for these analyses have been reported previously.[1]

RADIOCHEMICAL ANALYSES

S. A. Reynolds

Most of the service analyses by the Radiochemical Analysis group were done for the Operations Division. These consisted of assay of unusual radioisotope products and analysis for impurities. The impurities were determined by chemical means and by such instruments as the scintillation spectrometer. Analyses for the Chemistry Division included special U^{233} determinations. Numerous fission-product analyses were made in connection with the cyclotron program.

ACTIVATION ANALYSES

G. W. Leddicotte

The activation analysis method has been applied to the routine determination of As, Cu, Na, Ni, Fe, and V in hydrocarbons; Na and Ca in Al; Sr in human tissue; As and Se in animal tissue; Ta, Zr, and Hf in aplite ore; and Ba in process solutions.

(1) P. F. Thomason, "Ionic Analyses – Development Group," *Anal. Chem. Quar. Prog. Rep. Jan. 10, 1951*, ORNL-955, p. 65.

GENERAL RADIOCHEMICAL ANALYSES

C. L. Burros

Most of the work of the General Radiochemical Analyses group was done for the Pilot Plant in connection with the Purex process. Assistance was given to the Chemical Technology Division in the studies of plutonium recovery from Scrup process samples and from fluoride residues of the Fluoride Volatility process, and of the fission-product decontamination of thorium from the Thorex process.

It was of general interest to know to what extent radioactive iodine would contaminate the final ruthenium precipitate in the standard ruthenium method.[2] This was estimated by making a ruthenium determination on an iodine-product sample with an activity equivalent to 2.51×10^6 beta counts per minute. The results are given in Table 17 and indicate that approximately 0.006% of the iodine activity was carried on the final ruthenium precipitate.

(2) D. N. Hume, N. E. Ballou, and L. E. Glendenin, "Ruthenium," *A Manual of the Radiochemical Determination of Fission Product Activities*, CN-2815, p. 34 (June 30, 1945).

TABLE 17. IODINE CONTAMINATION OF RUTHENIUM PRECIPITATES*

TOTAL IODINE BETA ACTIVITY TAKEN x 10^{-6} (cpm)	APPROXIMATE BETA ACTIVITY ON RUTHENIUM PRECIPITATE (cpm)
2.62	90
2.52	496
2.46	62
2.51	136
2.43**	132
2.52**	56
Average 2.51	162

*Counting geometry = 10.18%.

**Activity as iodine beta, other values as gross beta.

GENERAL ANALYSIS LABORATORY

J. H. Edgerton

Ion-Exchange Separation of Fluoride (J. H. Edgerton, J. F. Emery). In the studies of the solubilities of metal oxides in UO_2F_2 by the Chemistry Division, it was necessary to know the fluoride content of samples of UO_2F_2 solutions. The fluoride was separated from the uranyl ion on a cation-exchange column of Amberlite IR-120 (1 cm) and Dowex-50 (4 cm) resins.[3] The fluoride was determined by titrating the HF in the eluate, received at a rate of approximately 0.5 ml/min, with standard alkali and a microburet.[4] The all-plastic apparatus shown in Fig. 11 was required. The data of Table 18 show that this method compares favorably with the more difficult pyrohydrolysis method described by Hibbits.[5]

Automatic Potentiometric Microtitration of Boron (J. H. Edgerton, L. C. Henley). The determination of the boron content of brazing flux, type 2S aluminum, and steel alloys was required by the Metallurgy Division in the evaluation of ANP high-temperature brazing alloy. The boron was separated and determined by the mannitol method,[6] except that the strong acid and boron-mannitol end points were detected potentiometrically with the ORNL automatic titrator, model Q-945, serial No. 3, equipped with a 0.5-ml/in., positive-feed, syringe-type, microburet. The boron distillates were made acid to a pH of 3.5 to 4.0 with hydrochloric acid.

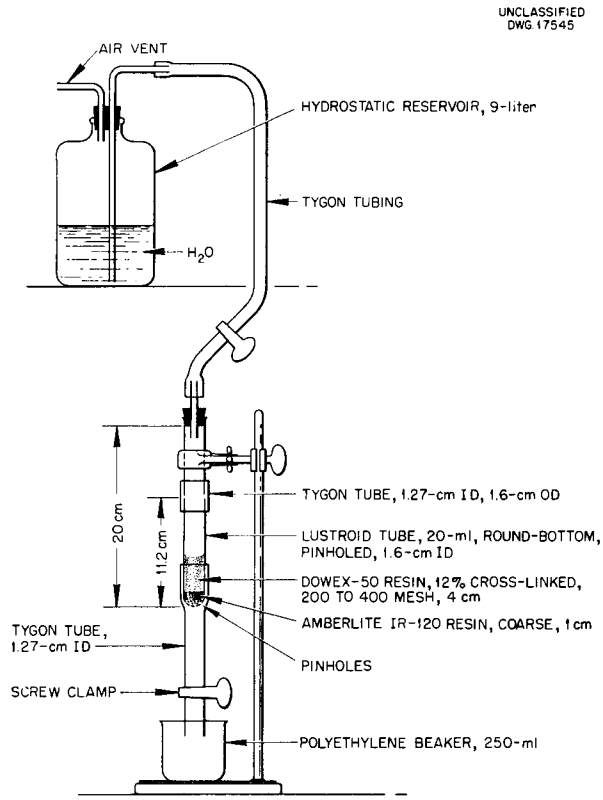

Fig. 11. Resin Column for the Determination of Fluoride in UO_2F_2 Solutions.

Standard sodium hydroxide solution was used to titrate to the strong-acid end point. A minimum of 2 g of mannitol[7] was then added, which made the pH decrease to about 4.5. It was necessary to add a total of 6 mmole (1.1 g) of mannitol for each millimole of boric acid. The boron-mannitol end point was obtained by completing the titration with standard sodium hydroxide solution. A typical titration curve is given in Fig. 12.

Table 19 gives data for the boron content of standards and samples from which boron was separated by ion exchange and distillation. It is believed to be possible to determine 1 ppm of boron with an accuracy of ±5% by this method.

(3) H. O. Day, J. S. Gill, E. V. Jones, and W. L. Marshall, *The Use of Dowex 50 for Sulfate Analysis of Uranium Trioxide-Sulfuric Acid-Water Solutions*, ORNL CF-52-10-25 (Oct. 1, 1952).

(4) J. H. Edgerton, "General Analysis Laboratory," *Anal. Chem. Quar. Prog. Rep. March 26, 1952*, ORNL-1276, p. 62.

(5) J. O. Hibbits, *Analysis of Uranyl Fluoride and Uranium Tetrafluoride by Pyrohydrolysis*, Y-883, p. 10 (July 2, 1952).

(6) J. H. Edgerton, "Determination of Boron," *Anal. Chem. Quar. Prog. Rep. Sept. 10, 1951*, ORNL-1129, p. 49.

(7) M. Kilpatric, C. A. Hutchison, Jr., E. H. Taylor, and C. M. Judson, *Separation of the Boron Isotopes*, NNES Vol. III-5, p. 400, McGraw-Hill, New York, 1952.

TABLE 18. FLUORIDE IN UO_2F_2 AS DETERMINED BY ION-EXCHANGE AND PYROHYDROLYSIS SEPARATION METHODS*

ANALYSIS NO.	FLUORIDE (%)	
	Ion Exchange	Pyrohydrolysis**
1	12.29	12.23
2	12.30	12.26
3	12.29	12.27
4	12.29	12.31
5	12.28	12.24
6	12.29	12.11
7	12.28	12.27
8	12.29	12.28
9	12.29	12.30
10	12.26	12.29
11	12.29	12.30
12	12.26	12.31
13	12.29	12.30
14	12.29	12.31
15	Average = 12.29	12.32
16	Average deviation (%) = ±0.10	12.32
17		12.32
18		12.32
19		12.33
		Average = 12.28
		Average deviation (%) = ±0.15

*Test solution: UO_2F_2 solution containing 12.33% fluoride.

**Data of J. O. Hibbits, Y-12 Analytical Department.

TABLE 19. BORON IN STANDARDS AND IN SAMPLES SEPARATED BY ION EXCHANGE AND DISTILLATION*

BORON IN BORIC ACID STANDARD (μg)**		BORON IN SYNTHETIC SAMPLE (μg)***			
		Ion-Exchange Separation		Distillation Separation	
Taken	Recovered	Taken	Recovered	Taken	Recovered
10.0	10.0	100.0	105.0	10.0	8.9
10.0	10.2	109.0	115.0	20.0	20.5
20.0	20.1	250.0	241.0	30.0	29.2
20.0	20.0	500.0	504.0	30.0	30.0
20.0	20.0	500.0	504.0	500.0	495.0
50.0	49.4	500.0	500.0	500.0	502.0
50.0	51.0	510.0	512.0	500.0	489.0
100.0	99.0	1000.0	1000.0	1000.0	1004.0

*Mannitol method employing automatic potentiometric microtitration.

**Baker and Adamson analytical reagent grade.

***25 mg of type 2S aluminum (less than 5 ppm boron) plus boric acid to give the indicated amount of boron.

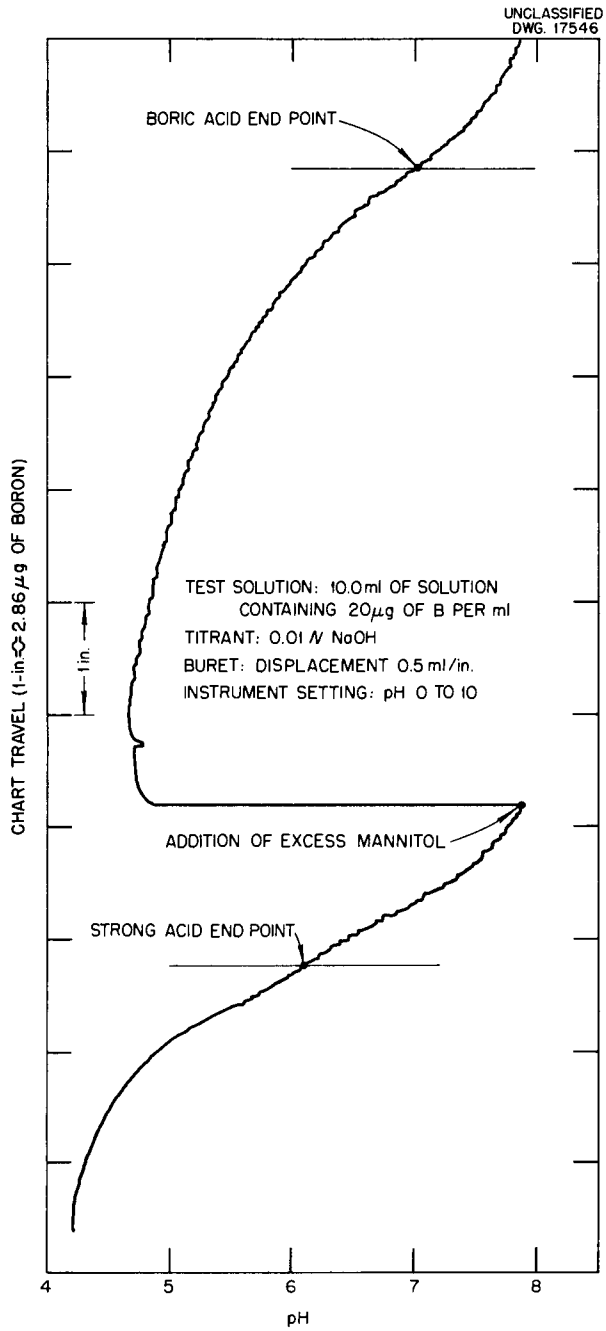

Fig. 12. Typical Automatic Potentiometric Microtitration Curve for Boron.

Calibration of Servo Remote-Control Pipet (J. H. Edgerton, L. C. Henley). A servo remote-control pipet designed by H. L. Hemphill has been calibrated for use with highly radioactive solutions. The calibration was made by delivering aliquots of 2.000 *N* HNO_3 solution with the pipet and titrating the acid delivered with standard dilute alkali delivered from a calibrated buret. The calibration data are summarized in Table 20.

Ion-Exchange Separation of Sodium and Uranium (J. H. Edgerton, H. G. Davis). The Chemical Technology Division requested sodium determination in their Purex product solutions. Before determining sodium with the flame photometer, it was necessary to separate the sodium and uranium. The separation was effected by making the solution 8 *M* in HCl and passing it through a Dowex A-1, 200- to 400-mesh resin column. The uranyl ion formed a negatively charged anion complex with the chloride ion. The complex remained on the column and the sodium was eluted. The eluate was evaporated to dryness, the residue dissolved in water and made up to volume. Sodium was then determined with the flame photometer. Uranium was eluted from the column with 0.1 *N* HCl and determined by standard methods.

LABORATORY AND SEMI-WORKS CONTROL

G. R. Wilson

During the past quarter, several requests were received for the determination of uranium in oils, concrete, and aqueous solutions of high-iron content and unknown quantities of other elements. The uranium in the oil samples was determined by burning the oil in a platinum crucible, fusing the ash with a Na_2CO_3-K_2CO_3 mixture, dissolving the melt in concentrated HNO_3, and measuring the uranium fluorometrically. The samples of concrete were treated in a platinum crucible with concentrated HNO_3 and then with a $HClO_4$-HF mixture. This treatment effected sample solution in most cases and the uranium was determined fluorometrically. If the sample did not dissolve, the residue from this treatment was fused with a Na_2CO_3-K_2CO_3

TABLE 20. CALIBRATION DATA FOR SERVO REMOTE-CONTROL PIPET

RANGE OF PIPET HELIPOT SETTINGS USED	NUMBER OF VOLUMES DELIVERED	STANDARD DEVIATION OF A SINGLE DELIVERY ($\pm\mu l$)
50 to 41	10	0.134
40 to 31	10	0.063
30 to 22	9	0.220
21 to 12	10	0.134
11 to 2	10	0.320

mixture, the melt dissolved in concentrated HNO_3, and the uranium determined fluorometrically.

The aqueous samples, which contained 0.5 to 1.0 mg of uranium per milliliter of solution, required several separations. The iron was extracted with a volume of isopropyl ether double that of the sample after the sample was made 8 *M* in HCl. After separation of the phases, KI solution was added to the aqueous phase to reduce any unextracted iron. The aqueous phase, which contained a small amount of reduced iron, the uranium, and the unknown elements, was passed through a Dowex A-1 anion-exchange column. The uranium was then eluted from the column with distilled water and determined by the ammonium thiocyanate colorimetric method.

PILOT PLANT CONTROL

C. E. Lamb

The work of the Pilot Plant Control laboratory and the number of priority analyses increased significantly with the start-up of the pilot runs of the Purex process, in which slugs of shorter cooling time are used, and of the Interim "23" project. The pilot runs required the use of nonroutine methods and the analysis of highly radioactive samples, some as active as 1500 r/hr. Five additional Purex runs using 60-day cooled slugs are expected during the forthcoming quarter.

In mounting TBP-Amsco solution on a hot, stainless steel plate for drying and alpha-counting, it is difficult to prevent the solution from flowing over the edge. Therefore a heating block that was designed and used by KAPL was installed. This block consists of a 1-in.-thick aluminum disk resting on a 4-in.-dia, ring-type heater that is mounted on a Transite base. The assembly is supported on a ringstand, and the heat is controlled by a Variac. The drying block has a 0.5-in. hole in the center through which a fine stream of air is directed upward. The plate is inserted over this hole into a circular ledge on top of the aluminum block and its edge allowed to come to a temperature of 175 ± 5°C, which is attained at a Variac setting of approximately 46 volts. The temperature differential across the plate prevents the solution from reaching the edge of the plate. The use of this heating block has improved the reproducibility of alpha-count data and reduced contamination of the alpha counters.

The specific gravity at 25°C can be determined more quickly for a sample if the measurement is made at room temperature, 20 to 30°C, and a correction factor applied, than if the temperature of the sample is adjusted to 25°C before the measurement.

At the request of the Hot Pilot Plant group, correction factors were determined for a series of uranyl

nitrate solutions of interest by measuring the specific gravity of the solutions at 5-deg intervals from 15 to 30°C through the use of a Westphal balance. The results obtained by measuring the samples at 5-deg intervals from 15 to 30°C are given in Table 21.

The Hot Pilot Plant group requested that a comparison be made of the methods available for determining TBP in Amsco solution. The three methods are: the dielectric constant method,[8] equilibration with acid,[9] and the uranium saturation method.[10] The methods were compared by use of a series of pure synthetic TBP-Amsco samples and a series of process TBP-Amsco samples which had been recycled in the columns. The data are given in Table 22.

(8) M. T. Kelley, P. F. Thomason, A. D. Horton, and J. L. Horton, *Estimation of Tributyl Phosphate (TBP) in Mixtures of TBP-Varsol*, ORNL-599 (Feb. 21, 1950).

(9) A. T. Gresky *et al.*, *Laboratory Development of the Thorex Process-Progress Report*, ORNL-1367 (in press).

(10) T. C. Runion and C. V. Ellison, *TBP Process for Uranium Recovery from Metal Waste – Laboratory Summary*, ORNL-557, p. 23 (Jan. 18, 1950).

TABLE 21. TEMPERATURE CORRECTION FACTORS FOR SPECIFIC GRAVITY OF CERTAIN URANYL NITRATE SOLUTIONS

SOLUTION COMPOSITION			CORRECTION FACTOR (per °C x 10^4)**
Solvent Medium	HNO_3 (*N*)	Uranium (~mg/ml)*	
TBP-Amsco***	0.18	88.5	7.2
	0.19	100	8.0
H_2O	0.02	45.4	2.2
	0.12	62.5	2.4
	0.75	403	6.6
	0.87	421	6.2
	0.70	424	6.0

*As uranyl nitrate.

**To be added for sample temperatures above 25°C, subtracted below 25°C.

***30 vol % TBP + 70 vol % Amsco.

TABLE 22. COMPARISON OF METHODS FOR TBP IN AMSCO SOLUTION

METHOD	NUMBER OF ANALYSES	TBP IN AMSCO SAMPLE (vol %)*	
		Synthetic**	Processed
Dielectric constant	30	30.0	31.5
Acid equilibration	20	30.9	32.3
Uranium saturation	20	28.3	29.1

*Average value determined from the number of analyses indicated.

**Prepared to contain 30.0 vol % TBP.

HRE ANALYSES

U. Koskela

Use of ORNL Automatic Titrator in Ferric Sulfate Titration of Uranium (W. D. Shults, II). Difficulties in the analysis of certain samples by the usual ceric sulfate titration prompted the use of a potentiometric method with ferric sulfate as titrant.[11] Because this titration is time-consuming, it was felt that the method could be improved by adapting it to the new ORNL automatic titrator, Q-945.

A heating unit similar to the one already described,[11] but with a Sim-ply-trol temperature control unit, was incorporated into the macro-titration system of the automatic titrator. A voltage setting was chosen so that the temperature of the sample solution was maintained at 90 to 95°C. All reagents and general sample preparations were the same as described in ORNL-983[11] except that the reducing solution was added to the sample by means of an inlet tube after the sample was placed in position.

Several electrode systems were studied. The use of titrant with the platinum contacting it as the reference electrode and a platinum or gold wire as the indicator electrode was found to be unsatisfactory because bubbles were formed in the buret at the relatively high titration temperature. A platinum wire-gold wire system was not usable. A calomel reference electrode gave somewhat better results. Best results were obtained with a glass-gold wire electrode system.

The optimum concentration of the ferric sulfate titrant was found to be approximately 0.1 *N*. A 0.05 *N* ferric sulfate solution gave indistinct end points, and 0.2 *N* ferric sulfate offered little improvement over a 0.1 *N* solution and required larger samples. By use of the glass-gold wire electrode system and 0.1 *N* ferric sulfate solution as titrant, several analyses have been made on gravimetrically standardized uranyl sulfate solution with an accuracy as good or better than that attainable with the method described in ORNL-983.[11]

Automatic Titration of Uranium with Stationary Electrodes and Rotating Container (J. C. Howard). In anticipation of the analysis of "hot" HRE solutions for uranium with the ORNL automatic titrator model Q-945, calibration curves were established in the conventional manner. However, the over-all accuracy was only ±3%. The poor accuracy was attributed to uneven stirring of the solutions. It was thought that even and reproducible stirring action could be obtained if the electrodes were stationary and the solution container rotated. A Lucite box was used as a housing to maintain an inert atmosphere around the sample and as a stationary support for the indicator electrode. A chuck with stainless steel clips was used to hold a 3-ml beaker to the shaft of the stirring motor. A flat iron-plate adapter fastened the motor to an electric jack. Of the motors tested, a 200-rpm, synchronous, Bodine motor gave the most satisfactory stirring action. A diagram of the apparatus is shown in Fig. 13. With the apparatus shown, it is possible to place the gold electrode about one-eighth to three-sixteenths of an inch to the right of the buret. This was found to be desirable because of the clockwise rotation of the solution. Excellent precision has been achieved in analyses made with the use of this apparatus. Three different operators ran a total of 52 titration curves by using a number of 50-μl pipets, 3-ml beakers, and random positioning of the electrodes. Forty four of the

[11] M. T. Kelley *et al.*, "Uranium - Potentiometric Titration with Ferric Sulfate," Method 11 in *Manual of Analytical Procedures for the U^{235} Recovery Process*, ORNL-983 (Aug. 20, 1951).

titration curves were used to determine the precision of the method. A precision of ±1% was realized. Numerous HRE solutions have been titrated for uranium by this method, and it was found that the precision on triplicate titrations was ±0.6%.

The major advantages of the method are (1) the stirring action is constant and easily duplicated; (2) the uranium half-waves in the titration curves are almost horizontal, thus effecting a decrease in the variation in measurements among analysts; (3) the apparatus is mechanically simple and easily operated; (4) breakable parts of the equipment can be replaced without special glass work; (5) small volumes

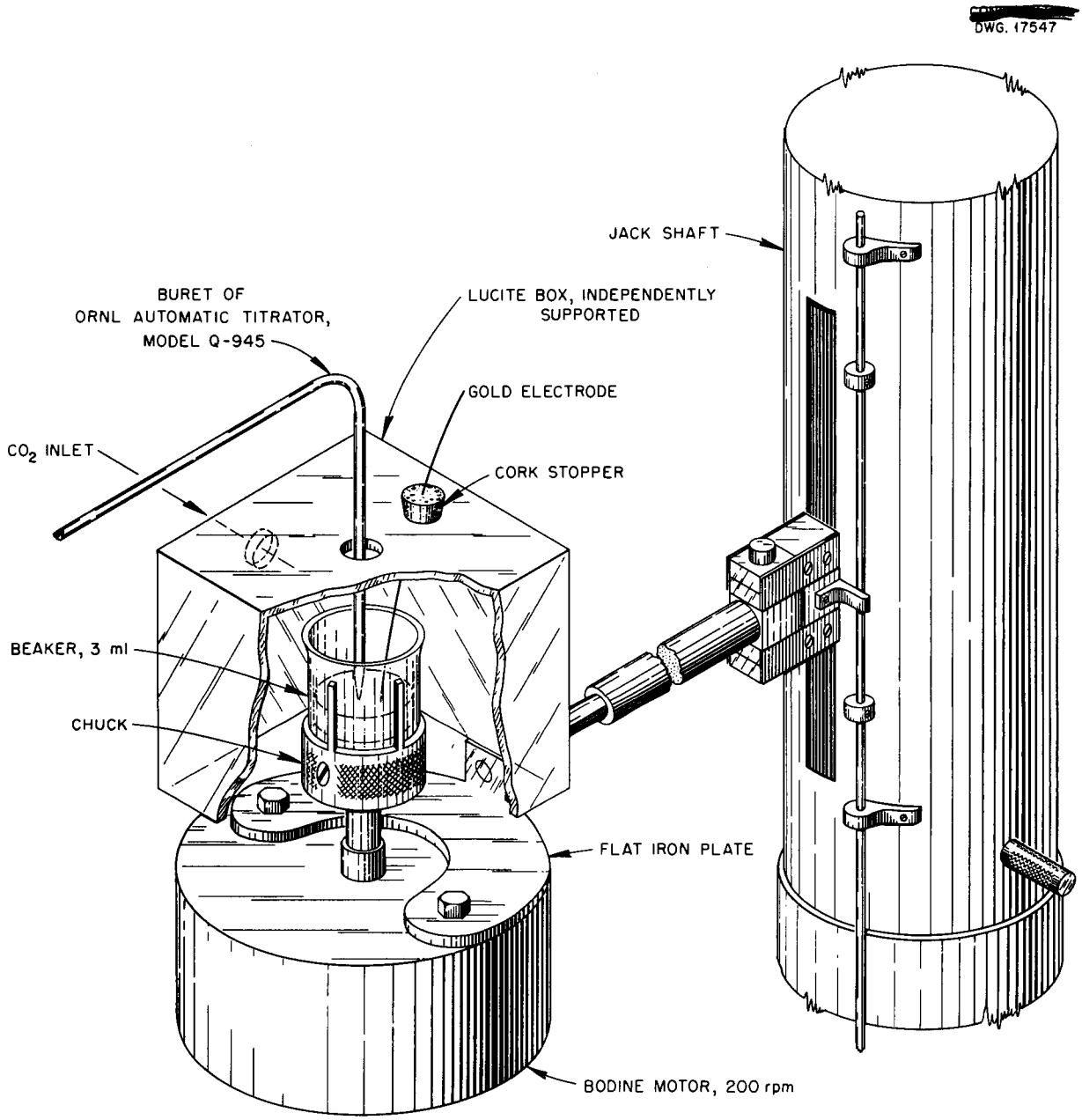

Fig. 13. Apparatus for Automatic Titration of Uranium with Stationary Electrodes and Rotating Container.

TABLE 23. SUMMARY OF ANALYTICAL SERVICE WORK AT X-10 SITE FOR PERIOD JUNE 27, 1952 THROUGH SEPTEMBER 26, 1952

	NO. OF PERSONNEL		ORNL DIVISIONS REQUESTING ANALYSES														OTHER REQUESTING ANALYSES					
	TECHNICAL	NONTECHNICAL	ANALYTICAL CHEMISTRY	ANP	CHEMICAL TECH.	CHEMISTRY	ELECTROMAGNETIC	ENGR. AND MAINT.	HEALTH	HEALTH PHYSICS	METALLURGY	OPERATIONS	PHYSICS	REACTOR TECH.	SOLID STATE	REED	ACCUMULATIVE COST CODES FOR ACTIVATION ANAL.	ADP	HRE	TVA	Y-12	TOTAL DETERMINATIONS
GROUP MAKING ANALYSES			NUMBER OF DETERMINATIONS																			
Activation Analyses	5	6	430		148	170				20		297	22		5		82	245			25	1,444
General Analyses	5	7			2,734	437		14		24	349	27	4		42				39			3,670
General Radiochemical	5	5			7,565					223			10							338		8,136
HRE	2	3														484						484
Ionic Analyses	10	1		20	21	219							8									268
Isolation	1	4			3,477																	3,477
Laboratory and Semi-Works Control	2	9			6,707	69					134	25	3						267			7,205
Optical and Electron Microscopy	3	1			85	197				5	79			148								514
Pilot Plant Control	8	14			14,199	56																14,255
Radiochemical Analyses	7	0			23	43	152			18		92	5	15								348
Radioisotope Production Control	3	16			1,766							6,304										8,070
Spectrochemical Analyses	5	0	28		1,147	17		2	6		142	34	3	78	9				5			1,471
TOTAL	56	66	458	20	37,872	1,208	152	16	6	290	704	6,779	55	241	56	484	82	245	311	338	25	49,342

of solutions may be titrated because as little as 300 μl of total solution can be tolerated; and (6) the electrodes may be positioned before they are brought in contact with the solution, thus giving added protection against radiation to the analyst.

ISOLATION ANALYSES

J. H. Cooper

A new method for correcting for iron interferences in the ceric sulfate titration of plutonium has been instituted by the Isolation Analyses group. The previous method of removing the iron by electrolysis with a silver-mercury electrode did not effect complete removal of the iron and introduced mercury into the sample, which also interferred. In the new method, iron is determined colorimetrically by *o*-phenanthroline[12] and the result used as a correction factor in the plutonium titrations.

The Isolation Analyses group is now prepared to do radiochemical analyses on plutonium and U^{233} product samples. These analyses are expected to begin during the next quarter.

(12) E. B. Sandell, *Colorimetric Determination of Traces of Metals*, 2nd ed, p. 375, Interscience, New York, 1950.

ANALYTICAL CHEMISTRY DIVISION - Y-12 SITE

RESEARCH AND DEVELOPMENT

R. Rowan, Jr.

ANALYTICAL STUDIES OF REACTOR FUELS AND THEIR COMPONENTS

J. C. White J. E. Lee, Jr.
C. M. Boyd W. J. Ross
C. K. Talbott

Analytical studies for the ANP project have been principally concerned with the proposed ARE fuel, $NaF-ZrF_4-UF_4$, and its components. The improvement and simplification of the methods of analyzing this reactor fuel have been of major interest. The work has included the indirect volumetric determination of alkali metals, the adaptation of a volumetric method for the determination of zirconium, and some investigations of the methods that are now being used for the determination of nickel and chromium.

Other problems studied were the development of a method, which is adaptable to unstable fluoride compounds, for the determination of trace amounts of water in solid materials, the determination of trace amounts of chloride in ZrF_4 and in reactor fuels, the chemical analysis of the substances formed by the action of NaK on reactor fuels, and the preparation and testing of the apparatus for the proposed method of determining oxygen in reactor fuels by means of bromine trifluoride. A discussion of the work done on these problems was included in the ANP Quarterly Progress Report.[1]

ANALYSIS OF ALKALI HYDROXIDES

W. K. Miller D. L. Manning

Satisfactory methods have been developed for the determination of submicrogram quantities of chromium and vanadium in alkali hydroxides, particularly in lithium hydroxide.

Vanadium. It was reported previously[2] that vanadium can be determined colorimetrically by a method in which the quantity of vanadium is calculated indirectly from the absorbancy of the ferrous-*o*-phenanthroline complex. Vanadium(V) is reduced to vanadium(IV) by hot hydrochloric acid, and the resulting solution is made alkaline with ammonia in the presence of iron(III) and *o*-phenanthroline. In the basic medium, vanadium(IV) is used to reduce iron to the ferrous state; then the resulting ferrous-phenanthroline complex is determined spectrophotometrically. Chromium does not interfere. Although as little as 0.05 μg of vanadium can be detected by this method, it is necessary to effect a separation of the element from a large sample in order to determine less than 0.1 ppm of vanadium in alkali hydroxides.

A well-known method for the extraction of vanadium from aqueous solutions is based on the solubility of the vanadium cupferrate or neocupferrate in organic solvents. This method was found to be unsatisfactory, however, for the separation of very small quantities of vanadium from alkali hydroxides.

The use of small columns of anion-exchange resin, which had proved successful in the separation of chromium,[3] appeared to be a possible

(1) C. D. Susano, "Analytical Chemistry," *ANP Quar. Prog. Rep. Sept. 10, 1952*, ORNL-1375, p. 159.

(2) W. K. Miller and D. L. Manning, "Analysis of Alkali Hydroxides - Vanadium," *Anal. Chem. Quar. Prog. Rep. June 26, 1952*, ORNL-1361, p. 37.

(3) W. K. Miller, D. L. Manning, and J. E. Lee, Jr., "Determination of Impurities in Lithium Hydroxide," *Anal. Chem. Quar. Prog. Rep. Mar. 26, 1952*, ORNL-1276, p. 69.

means of separating microgram quantities of vanadium from alkali hydroxides, although the results of earlier tests had not been encouraging.[2] It was found, however, that elution of vanadate was more readily achieved if a small reversible column was used. It was demonstrated experimentally, by employing an alkaline solution of phenolphthalein, that anions are concentrated and held in a narrow band at the top of the resin bed. The red, phenolphthalein band could be washed very slowly down the column by a 2 *M* K_2CO_3 solution. The reversible column is constructed so that it can be inverted prior to the elution step, thus making possible the elution of the narrow band from the bottom of the resin column in the direction opposite from that in which the solution was introduced. Consequently, it is not necessary to wash the band completely through the column during the elution process.

The procedure for the separation of vanadium from the hydroxide matrix is similar to that described previously[3] for the separation of chromium. Vanadium is determined in the evaporated eluate by the indirect ferrous-phenanthroline method. As little as 0.05 ppm of vanadium in the alkali hydroxide can be quantitatively determined by taking a 20-g sample for analysis and making the absorbancy measurements in cells of 2.5-cm light-path length. The final report[4] on this project has been written.

Chromium. The success of the reversible column in the ion-exchange separation of vanadium from alkali hydroxides prompted the testing of this column for the separation of chromium. A procedure that was identical with that described in the preceding paragraphs for vanadium was employed. Two drops of hydrogen peroxide was added to the hydroxide solution prior to the separation in order to completely oxidize chromium to chromate. The final determination of chromium was made by the diphenylcarbazide method[5] after evaporation of the eluate to a small volume.

A series of tests has indicated that if a 20- to 25-g sample is taken for analysis, as little as 0.01 ppm of chromium can be determined in alkali hydroxides. The optical density measurement of the chromium-diphenylcarbazide complex is made preferably in absorption cells of 2.5-cm light-path length after dilution to a final volume of only 10 ml. The standard deviation of the method is 18%.[4]

DETERMINATION OF URANIUM IN BARTOW CLAYS

W. K. Miller D. L. Manning
J. J. McCown

Difficulties that have been encountered in the colorimetric determination of uranium in low-grade phosphate ores have necessitated the exclusive use of the fluorometric method[6] for the analysis of Bartow clays and Florida Leached Zone materials in connection with the Raw Materials program. The relatively poor precision of the fluorometric method often results in failure to obtain a good material balance between the uranium content of the head sample and the sum of the uranium contents in the various leaches and residues. Consequently, a search is being made for a more precise method for analyzing these phosphatic materials.

Cellulose Column Method. In a previous report[7] an account was

(4) W. K. Miller, D. L. Manning, and R. Rowan, Jr., *Determination of Submicrogram Quantities of Chromium and Vanadium in Alkali Hydroxides*, ORNL-1396 (Sept. 8, 1952).

(5) E. B. Sandell, *Colorimetric Determination of Traces of Metals*, 2nd ed., p. 260, Interscience, New York, 1950.

(6) C. J. Rodden (Editor-in-Chief), *Analytical Chemistry of Manhattan Project*, p. 565, McGraw-Hill, New York, 1950.

(7) W. K. Miller, C. M. Boyd, and M. L. Druschel, "Determination of Uranium by Cellulose Column Extraction Methods," *Anal. Chem. Quar. Prog. Rep. Dec. 26, 1951*, ORNL-1233, p. 65.

given of the study of a cellulose-column extraction procedure for the separation of uranium from the other constituents of low-grade ores prior to the colorimetric determination of the element. A test of the method on a series of Bartow clay samples indicated that the standard deviation was approximately 10% when the final determination was made by the thiocyanate method.[8]

The application of the cellulose-column method to the analysis of low-grade ores is anticipated; therefore additional work has been carried out. The results were erratic, in general, in contrast to the more promising results reported previously.[7] Part of the difficulty could be traced to the final method of determining uranium, but an incomplete separation of uranium from iron appeared to be the greatest source of error. The peroxide[9] and polarographic[10] methods were tested as substitutes for the thiocyanate method for the determination of uranium. Variations in the method of preparing the pulp and in the length of the column were made in an effort to prevent iron from passing into the eluate, but none of the measures were successful. The investigation is not complete.

A study is presently under way of a partition chromatographic technique which was suggested by Dr. Frierson[11] of Agnes Scott College. A strip of thick filter paper that contains the absorbed sample is employed. A solution of nitric acid in ether (5 wt/vol %) is allowed to pass through the paper and extract the uranium into the organic phase. The number of results that has been obtained is insufficient to permit proper evaluation of the method.

Ultraviolet Absorption Method. The extremely high absorption of ultraviolet light by a solution containing uranium and alkali carbonate indicated that an ultraviolet spectrophotometric method for the determination of uranium might be possible. It was determined that iron could not be tolerated in the solutions on which the ultraviolet absorption measurements were made. Appreciable quantities of aluminum, nitrate, and phosphate also interfere with the measurements. Sulfate, chloride, and alkali metal ions do not interfere. Successful application of the method, therefore, is dependent on an efficient means of separating uranium from most of the constituents present in the ores.

The separation of uranium from the bulk of the impurities may be accomplished by either tributyl phosphate (TBP) or diethyl ether extraction of a nitric acid solution of the material after the addition of aluminum nitrate as a salting-out agent. Uranium can be backwashed from the TBP extract by a solution of sulfuric acid or ammonium carbonate, and ether is readily removed by adding water and evaporating the organic layer. The resulting solution is evaporated to a small volume, and nitrate is removed by fuming twice with sulfuric acid; the acid is then neutralized with sodium hydroxide solution and sodium carbonate is added. Residual iron and aluminum precipitate at this point and are removed by filtration. After adjustment of the solution to volume, the absorbancy is measured at 250 mμ.

Tests of the two extraction procedures produced erratic results in the final absorbancy measurements. Colorimetric thiocyanate tests indicated that a significant amount of the chief interference, iron, remained in solution even after the carbonate precipitation.

---

(8) C. Crouthamel, C. Johnson, R. Vogel, "Development of Techniques for Analysis for Uranium in Hydrofluoric Acid-Zirconium Solutions - Modified Thiocyanate Method for Determination of Uranium," *Argonne National Laboratory Summary Report, October, November and December, 1950*, ANL-4588, p. 40.

(9) C. J. Rodden, *op. cit.*, p. 83.

(10) *Ibid.*, p. 596.

(11) W. J. Frierson, private communication to C. D. Susano, Sept. 1, 1952.

Another method of uranium separation that employs double cupferron precipitation was attempted. The sample, in sulfuric acid solution, was passed through a Jones reductor to reduce the uranium. Uranium was then precipitated as the cupferrate, along with iron, titanium, and possibly other elements. After filtration, the organic material was destroyed and the uranium was oxidized to uranium(VI) by treatment with a hot HNO_3-$HClO_4$ mixture. A second precipitation with cupferron resulted in a separation of the uranium(VI) from the other elements, which were extracted as the cupferrates by ethyl acetate. After addition of carbonate, the aqueous phase was then analyzed for uranium by measuring the absorbancy of the solution. The results obtained with this procedure were more promising but were still erratic.

It is also planned to test an ion-exchange procedure in which uranium is retained as the complex sulfate on a strong-base anion-exchange resin and finally eluted with hydrochloric acid. Initial tests have indicated that phosphate is not retained on an anion-exchange resin if the solution is sufficiently acid. It is believed, therefore, that this procedure may effect a separation of uranium from phosphate and all of the cations.

Indirect Colorimetric Method. A recently developed, indirect, colorimetric method for the determination of uranium has proved to be more sensitive than the colorimetric methods in general use. The procedure is based on the reduction of iron(III) by uranium(IV) and subsequent determination of the resulting iron(II) by the *o*-phenanthroline method.[12] The method depends on an efficient separation of uranium from iron, since, if any iron is present in the solution during the step in which uranium(VI) is reduced to uranium(IV), the iron will also be reduced, and the results will be in error.

Two satisfactory methods for the reduction of uranium(VI) to the quadrivalent state are the Jones reductor[13] method and mercury cathode electrolysis.[14] The latter method is advantageous in the present application because iron is removed at the same time by deposition in the mercury cathode, but the electrolysis is a tedious, time-consuming step. If an efficient preliminary separation of iron is achieved, the Jones-reductor procedure is more convenient. Uranium is partially reduced to the trivalent state by either method, and a short aeration step is necessary to assure that only uranium(IV) is present. Excessive aeration is avoided because microgram quantities of uranium can be oxidized to the hexavalent state by air.

A test of the indirect method on standard solutions of uranium(VI), in which uranium(VI) had been reduced to the quadrivalent state by both reduction procedures, produced straight-line plots of absorbancy vs. concentration. The slopes of the lines represented a colorimetric factor of 13.3 μg of uranium/ml/optical-density unit (1-cm cell length) as compared with a factor of 167 by the *l*-ascorbic acid method.[15] These values illustrate that the indirect method is 12.5 times more sensitive than the *l*-ascorbic acid method. Tests of the method on synthetic and spiked Bartow clay samples after preliminary separation of uranium by TBP extraction have, however, yielded inconsistent results. Synthetic samples that contained iron and presumably no uranium produced a color with *o*-phenanthroline when carried through the

(12) C. J. Rodden, *op. cit.*, p. 422.

(13) *Ibid.*, p. 54.

(14) *Ibid.*, p. 511.

(15) C. D. Rothenberger and W. R. Grimes, *Use of l-Ascorbic Acid as a Colorimetric Reagent for Uranium*, H-4.360.13 (June 9, 1947).

same procedure, thus illustrating that the complete removal of iron had not been achieved by the extraction.

Evaluation of the double cupferron and ion-exchange methods of separation of uranium is planned prior to the application of the indirect colorimetric method of uranium determination. These separation procedures were described briefly in a previous paragraph in connection with the ultraviolet-absorption method.

ANALYSIS OF URANYL SULFATE AND URANIUM OXIDE

Zirconium (O. Menis). Studies of the chloranilic acid method[16] for the determination of microgram quantities of zirconium in uranyl sulfate solutions have been continued, and a series of process samples has been analyzed. The final phases of the study have dealt with the effects on the sensitivity that are produced by varying the excess quantity of chloranilic acid reagent. The interference of of other ions and the effect of reagent purity were also studied.

In solutions of reagent concentration greater than 3.6×10^{-3} *M*, precipitation of the complex occurred when the reagent was recrystallized.[17] Because the recrystallized material was to be used in subsequent studies, it was necessary to maintain the final reagent concentration below this value. It was illustrated by experiment that maximum sensitivity was attained in a solution which was 2.6×10^{-3} *M*; the colorimetric factor was independent of the reagent concentration in the range of 2.6×10^{-3} to 3.4×10^{-3} *M*. It was also found that in the higher reagent concentration a relatively higher uranium concentration could be tolerated without reducing the sensitivity of the method.

A study was also made of the interference of iron(II and III) and of tin(II and IV). In a 2.6×10^{-3} *M* chloranilic acid solution, it was found that iron(II) and tin(II) did not interfere when in concentrations of 1 μg or less per ml of final solution. One microgram of tin(IV) per ml of final solution caused an increase in absorbancy equivalent to 0.05 μg of zirconium. Iron(III), when present to the extent of 1 μg per ml of final volume, is equivalent to 0.15 μg of zirconium per ml of final volume. Fluoride, when present in concentrations less than 3 μg per ml of final volume, does not interfere, but milligram quantities prevent the development of the colored complex.

A series of 15 samples of uranyl sulfate solution was analyzed by this method. The samples ranged in concentration from 0.15 to 3.7 μg of zirconium per ml of solution. The standard deviation, estimated from the average difference between duplicates, was ±8.4%. The samples were spiked with a standard solution of zirconium, and the zirconium content was redetermined. An average recovery of 98% of the added zirconium was obtained.

Nickel (O. Menis, M. L. Druschel). The study of the dimethylglyoxime method for the colorimetric determination of nickel in uranyl sulfate solutions has been completed. As previously reported,[18] at a wavelength of 446 mμ, concentrations of uranium as uranyl sulfate up to 4 mg/ml in the reference and sample solutions can be tolerated without change in sensitivity. Additional tests have shown that the determination can be made in the presence of uranium in concentrations between 5 and 7 mg/ml by utilizing a colorimetric factor that is specific for this concentration

(16) O. Menis, "Analysis of Uranyl Sulfate Solution – Zirconium," *Anal. Chem. Quar. Prog. Rep. June 26, 1952*, ORNL-1361, p. 49.

(17) B. J. Thamer and A. F. Voigt, "The Spectrophotometric Determination of Overlapping Dissociation Constants of Dibasic Acids. The acid Constants of Isophthalic, Terephthalic, and Chloranilic Acids," *J. Phys. Chem.* **56**, 225 (1952).

(18) O. Menis and M. L. Druschel, "Analysis of Uranyl Sulfate Solutions – Nickel," *Anal. Chem. Quar. Prog. Rep. June 26, 1952*, ORNL-1361, p. 46.

range. If uranium is present in concentrations greater than 7 mg/ml, Beer's law no longer holds, and all absorbancy measurements must be made at 515 mμ, a wavelength where uranium does not interfere. This is particularly true if a slit width greater than 0.43 mm is required to balance the instrument. Because the Beckman model B spectrophotometer is less sensitive than the model DU, the wavelength of 446 mμ can be used with the model B only when the concentration of uranium is 2 mg/ml or less.

The optimum pH for maximum color development was found to vary with the concentration of nickel in the sample and with the wavelength used. A compromise pH of 9.5 ± 0.05 resulted in a precision of better than 2% at 446 mμ and better than 3% at 515 mμ for concentrations of nickel between 0.2 and 8 μg/ml. The temperature during the one-half hour period allowed for color development should be maintained between 25 and 30 °C. Higher or lower temperatures yield erratic results. A 10-ml volume of a 30% solution of ammonium citrate was found to complex 500 mg of uranium in a final volume of 50 ml. Iron(II or III), the other principal interference, can be tolerated up to 1 mg/ml. The nickel-dimethylglyoxime complex, if formed under the conditions described above, is stable for a period of at least an hour after the period that is allowed for color development. The quantity of dimethylglyoxime necessary to complex the nickel was also studied. A fourfold variation in the quantity of reagent does not affect the precision or sensitivity of the method at the 446-mμ wavelength. At 515 mμ, however, the quantity of reagent was found to be a critical factor. For best results the dimethylglyoxime must be omitted in the reference solution. The optimum conditions of the method and the sensitivity and precision obtainable under those conditions are being summarized in a final report.

Nitrate (O. Menis). The need for a sensitive and precise method for the determination of microgram quantities of nitrate in uranyl sulfate solutions has led to the investigation of a method developed by Chamot[19] for water analysis. After evaporation of the solution to dryness, the nitrate is allowed to react with phenoldisulphonic acid reagent in aqueous solution; the solution is then adjusted to a pH of 7.5 ± 0.1 with KOH, and the absorbancy of the colored complex is determined at 410 mμ. A search was made for a complexing agent that would prevent the uranium from precipitating and would not interfere with the procedure. Of the three complexing agents tested, carbonate, citrate and oxalate, only the oxalate did not interfere. The absorption spectrum of the compound formed between nitrate and phenoldisulfonic acid was not shifted by the presence of a uranyl oxalate complex.

In order to avoid losses of nitrate, a search was also made to find the best procedure for dissolving the UO_3. The procedure that has been adopted consists of the dissolution of the oxide in the phenoldisulfonic acid reagent with the aid of hot water, addition of an aqueous solution of sodium oxalate, adjustment of the pH to 7.5 ± 0.1, and measurement of the absorbancy on a model DU Beckman spectrophotometer at 410 mμ against a reference solution that contains uranyl oxalate in a concentration equivalent to that in the samples. The method was tested on several series, each series consisting of four standard solutions that ranged in concentration from 0.3 to 0.6 μg of nitrogen per ml of final solution and contained 0.1 and 0.2 g of UO_3. A standard deviation of approximately 10% was calculated

[19] E. M. Chamot, D. S. Pratt, and H. W. Redfield, "A study on the Phenolsulfonic Acid Method for the Determination of Nitrates in Water," *J. Am. Chem. Soc.* **33**, 366 (1911).

from the results of these determinations.

Aluminum (O. Menis, T. R. Phillips). An investigation has been made of methods for the determination of microgram quantities of aluminum in uranyl sulfate solution. In this connection, a series of tests was made to determine the feasibility of a quantitative separation of aluminum from uranium, although a procedure in which aluminum is determined in the presence of uranium was finally adopted.

Attempts were made to separate aluminum from uranium by passing the uranyl sulfate solution through a Dowex-1 anion-exchange column in which the uranium is retained but the aluminum is not. The aluminum in the effluent was determined by the "aluminon" method. The results of the tests indicated that aluminum at a concentration of a few micrograms per ml can probably be determined by this method with a precision of about 30%. The principal difficulty appeared to be in the separation procedure. The blanks for the column were relatively high and nonreproducible. It is evident that if the method is to be wholly successful, the reproducibility of the blank will have to be greatly improved. It is not expected, however, that any further work will be done along these lines.

In a subsequent investigation, it was found that aluminum can be determined in the presence of uranium, provided the latter element is complexed with carbonate. The method is a modification of that of Craft and Makepeace,[20] in which 4 mg of ammonium carbonate is added for each milligram of uranium in order to keep the uranyl ions in solution when the pH of the final solution is adjusted to 4.2.

Several series of standard samples containing 1 mg of uranium(VI) and 0.1 to 0.4 μg of aluminum per ml of final solution were analyzed by this procedure, and the colorimetric factor (concentration/absorbancy) was found to be reproducible. The factor had a value of 2.02 μg of aluminum/ml/optical density unit with a standard deviation of 0.7 μg of aluminum/ml/optical density unit.

ANALYSIS OF THORIUM OXIDE SLURRIES

T. R. Phillips O. Menis

Thorium. An investigation of the method of determining thorium by means of chloranilic acid was discussed in a previous quarterly report.[21] Although it is expected that this study will be resumed, no work was done during the present period.

Fluoride. A method is desired for the determination of fluoride in the aqueous phases of slurries of ThO_2. The approximate fluoride concentration expected is a few micrograms per ml. An investigation was made to determine whether the diminution of the color of the thorium-chloranilic acid complex by fluoride ions could serve as the basis for a sensitive colorimetric method for fluoride. Information gained during the previous work on the determination of thorium by means of chloranilic acid[21] aided in the selection of proper conditions for the present method.

The method consists of the addition of chloranilic acid reagent, thorium, and perchloric acid to the sample containing fluoride and the measurement of the absorbancy of the solution at 345 mμ against a reference solution of the reagent after an aging period. There is little variation in the absorbancy of a solution of thorium, chloranilic acid reagent, and fluoride over a period up to 2.5 hours. The color stability was better in a perchloric acid medium than in an acetic

[20] C. H. Craft and G. R. Makepeace, "Colorimetric Estimation of Aluminum in Steel," *Anal. Chem.* **17**, 206 (1945).

[21] T. R. Phillips, O. Menis, "Analysis of Thorium Slurries" *Anal. Chem. Quar. Prog. Rep. June 26, 1952*, ORNL-1361, p. 51.

acid medium, and the sensitivity was not noticeably decreased. Interferences have not yet been studied, but it can be assumed that any ion that forms a complex with fluoride or the chloranilic acid reagent would interfere with this method. Although only pure solutions of sodium fluoride have been tested, it appears that the method may be quite useful for the determination of fluoride in concentrations in the range of 0.2 to 6 μg/ml.

QUALITY CONTROL

R. L. McCutchen

The control programs for the General Analytical Chemistry laboratory and the ANP Analytical Chemistry laboratory have been expanded during this quarter. Daily control of the accuracy and precision of the test results was maintained in both laboratories by the use of daily control standards. Youden's method of control was substituted for the daily control standards in the HRP Analytical Chemistry laboratory, and regular process samples were used to maintain a daily control of the accuracy and precision of the test results being reported. The control programs of the Analytical Chemistry Division laboratories at the X-10 site remained essentially the same as those reported for previous quarters.

The four laboratories participating in the control program reported a total of 2778 control determinations during this period as compared to 1570 reported last quarter. A summary of the number of control determinations reported by each laboratory is given in Table 24.

TABLE 24. SUMMARY OF CONTROL DETERMINATIONS

LABORATORY	TOTAL NUMBER OF DETERMINATIONS
General Analytical	385
HRP Analytical	905
ANP Analytical	260
Analytical (X-10 site)	1228
Total	2778

General Analytical Chemistry Laboratory. In general, the work this quarter has consisted of providing daily correction factors, based on control standards, to compensate for the day-to-day variation in test results and making a statistical evaluation of the test results to determine the precision of the reported values. As a result, tentative control limits, based on the difference between duplicate sample determinations, have been calculated.

It was observed that whenever the daily correction factor was larger than had been obtained previously, the method was in need of attention. As a result of this observation, the daily correction factors were studied to determine whether control limits for these factors could be used to determine the need for remedial action before sample values had been reported. It was found that correction factor limits could be used for that purpose. Therefore the control limits for the sample determinations indicate the reproducibility or precision of the test results, whereas the correction factor limits control the accuracy of the reported values as well as indicating the need for remedial action before the test results are reported.

The tentative control limits and correction factor limits for the General Analytical Laboratory are given in Tables 25, 26, 27, and 28.

HRP Analtyical Chemistry Laboratory. The HRP Analytical laboratory's control program for the analysis of uranyl sulfate solutions for uranium and the corrosion products, iron, nickel, chromium, and manganese was revised this quarter by substituting Youden's method for maintaining control of the

TABLE 25. TENTATIVE CONTROL LIMITS BASED ON THE DIFFERENCE BETWEEN DUPLICATE DETERMINATIONS BY GRAVIMETRIC AND VOLUMETRIC METHODS

TYPE OF ANALYSIS	DETERMINATION	NUMBER OF DUPLICATES	APPROXIMATE MAGNITUDE OF MEASURED QUANTITY	STANDARD DEVIATION (%)	CONTROL LIMITS* (%)
Gravimetric					
	Fe	2	100 mg	1	2
	Cu	3	10 to 20 mg	9	20
	Ni	2	100 mg	0.5	1
	Mg	15	100 mg	1	2
	Co	2	50 mg	2.5	5
	Mo	4	10 to 20 mg	5	10
	Si	18	100 mg	1	2
	SO_4^{--}	36	100 mg	2	4
	PO_4^{---}	28	100 mg	0.5	1
	CO_2	12	100 mg	1.5	3
Kjeldahl Nitrogen					
	N	15	15 ml	5	10
	NH_4^+	7	15 ml	2.5	5
Volumetric					
	Fe	17	> 5 ml	2	4
	Al	38	> 5 ml	1.5	3
	Cr	5	10 ml	2	4
	Mn	25	15 ml	1.0	2
	V	2	10 ml	2.5	5
	Ca	21	> 5 ml	2	4
	Br	4	10 ml	1	2
	Cl	11	15 ml	0.3	0.5
	Alkalinity	11	10 to 45 ml	0.7	1.5

*95% probability level.

precision and accuracy of the test results for the daily control standards.

A significant improvement in precision was noted for the determination of iron, nickel, chromium, and manganese, although over 5% of the control results were outside the control limits during this period. The fact that over 5% of the results were out-of-control is not particularly important in the determination of iron, chromium, and manganese because the precision for these three determinations has been progressively improving, and, in most instances, results outside the control limits were obtained early in the quarter before these control limits had been established.

The nickel method was modified in July by substituting potassium persulfate for ammonium persulfate. Initially, it appeared that this modification improved the precision of the test results; however, at this time there appears to be little difference between the two oxidants insofar as the precision of the test results is concerned.

The precision of the uranium-control results is somewhat better than was observed for last quarter,

TABLE 26. TENTATIVE CONTROL LIMITS BASED ON THE DIFFERENCE BETWEEN DUPLICATE URANIUM DETERMINATIONS

	NUMBER OF DUPLICATES	MAGNITUDE OF MEASURED QUANTITY	STANDARD DEVIATION (%)	CONTROL LIMITS* (%)
Fluorometric Method				
Leach solutions				
HNO_3	45	1 to 5 μg/ml	11	20
H_2SO_4	18	1 to 5 μg/ml	5	10
Organic (various)	39	1 to 6 μg/ml	30	60
Solids				
HNO_3 (leached)	50	1 to 5 μg/ml	20	40
H_2SO_4 (leached)	17	1 to 5 μg/ml	12	25
Lignite (unleached)	25	1 to 5 μg/ml	15	30
Colorimetric Method				
Leach solutions				
H_2SO_4	20	>0.1**	6	10
Organic	126	>0.1**	3.5	7
Oxidation Reduction Method - $(UO_2)_3(PO_4)_2$				
Zn-ceric	21	~20 ml	0.25	0.5
Chromous-ferric	21	~ 3 ml	1	2

*95% probability level.

**Optical density.

but not significantly so, and a larger percentage of the control results are outside the control limits. This is believed to be caused by certain samples, processed from time to time, that contaminated the zinc reductors. When contamination occurred, samples processed at that time were not reported until the reductors had been renewed and the samples reprocessed. Therefore the fact that over 5% of the control results were out-of-control does not indicate that remedial action is necessary.

The control limits established during this quarter by use of Youden's method of control and the limits established by use of the daily control standards for the first and second quarter of this year are given in Table 29.

ANP Analytical Chemistry Laboratory. As mentioned previously,[22] eight solid eutectic NaF-KF-UF_4 materials were analyzed in the ANP Analytical Chemistry laboratory for control purposes. At that time, the lack of precision observed for the determination of iron, nickel, and chromium in these materials was believed to be caused by either the lack of homogeneity in the solid material or too low a concentration of iron, nickel, and chromium to give good precision. To determine which of these two factors was responsible, the control program was revised to include solutions containing known amounts of iron, nickel, and chromium as daily control standards

(22) R. L. McCutchen, "Quality Control - ANP Analytical Laboratory," *Anal. Chem. Quar. Prog. Rep. June 26, 1952*, ORNL-1361, p. 56.

TABLE 27. TENTATIVE CONTROL LIMITS BASED ON THE DIFFERENCE BETWEEN DUPLICATE DETERMINATIONS BY COLORIMETRIC AND FLAME PHOTOMETRIC METHODS

DETERMINATION	REAGENT	NUMBER OF DUPLICATES	TRANS-MITTANCY (%)	OPTICAL DENSITY	STANDARD DEVIATION (%)	CONTROL LIMITS* (%)
		Flame Photometric Method				
K		5	25 to 65		0.5	1
Na		117	25 to 65		2.0	4
Li		136	25 to 65		0.5	1
		Colorimetric Method				
Fe	α,α'-Bipyridyl	27		> 0.1	3.5	7
Fe	α,α'-Bipyridyl	62		< 0.1	5	10
Fe	Salicylic acid	119		> 0.1	4	8
Al	Aluminon	63		< 0.1	25	50
Al	Aluminon	51		> 0.1	1.5	3
V	Peroxide	14		> 0.1	1	2
Mo	Molybdenum blue	66		> 0.1	2.5	5
PO_4^{---}	Mixed vanadate	230		> 0.1	2	4

*95% probability level.

TABLE 28. PROPOSED CONTROL LIMITS AND CORRECTION FACTOR LIMITS BASED ON CONTROL STANDARDS

DETERMI-NATION	METHOD	NO. OF DUPLICATES	OPTICAL DENSITY	VOLUME (ml)	STANDARD DEVIATION (%)	CONTROL LIMITS* (%)	CORRECTION FACTOR LIMITS*
U	Fluorometric	28		1 to 5**	5	10	0.80 to 1.20
U	*l*-Ascorbic acid	27	> 0.1		3.5	7	0.85 to 1.15
U	Potentiometric titration	6		~3	1	2	0.98 to 1.02
U	Jones reductor-ceric sulfate	17		15 to 20	0.3	0.5	0.98 to 1.02
Fe	α,α'-Bipyridyl	8	> 0.1		1	2	0.90 to 1.10
Fe	Salicylic acid	9	> 0.1		1.5	3	0.90 to 1.10
Fe	Volumetric	7		> 5	2	4	0.90 to 1.10
Al	Aluminon	19	> 0.1		2.5	5	0.80 to 1.20
Al	Volumetric	11		> 5	1.5	3	0.95 to 1.05
V	Peroxide	4	> 0.1		1.5	3	0.90 to 1.10
Mo	Molybdenum blue	15	> 0.1		4	8	0.80 to 1.20
Ca	Volumetric	2		~15	2	4	0.95 to 1.05
PO_4^{---}	Mixed vanadate	21	> 0.1		1.5	3	0.95 to 1.05
PO_4^{---}	Gravimetric	2		~100***	0.5	1	0.95 to 1.05

*95% probability level. **μg/ml. ***mg.

TABLE 29. STATISTICAL EVALUATION OF THE PRECISION AND ACCURACY OF CONTROL RESULTS MADE BY USING YOUDEN'S METHOD OF DAILY DIFFERENCES

DETERMINATION	METHOD	NUMBER OF DETERMINATIONS	CONCENTRATION RANGE (μg/ml)	CONTROL LIMITS (%)		DIFFERENCES OUTSIDE OF CONTROL LIMITS OF YOUDEN (%)
				Youden*	Established*	
U	Jones reductor-ceric sulfate	45	26 to 56**	0.8	1.0	11
Ni	Dimethyl glyoxime-ammonium persulfate	15	10 to 40	4.0	15	7
	Dimethyl glyoxime-potassium persulfate	34	10 to 40	4.0		15
	Dimethyl glyoxime-$NH_4S_2O_8$ and $K_2S_2O_8$	49	10 to 40	4.0		12
Cr	Diphenyl carbazide-bismuthate	47	5 to 10	2.0	20	8
Fe	α,α'-Bipyridyl	31	8 to 15	5.0	20	13
Mn	Periodate	8	~30	5.0	40	13

*95% probability level.

**μg/ml.

and only four eutectic solids, that is, two untreated materials and two materials that had been previously treated to reduce the corrosive tendencies of the materials.

A comparison of the test results for these two types of materials shows that the heterogeneity of the solid samples is largely responsible for the poor precision observed for the determination of iron, nickel, chromium, and uranium in these materials. A summary of the control data obtained during this period is given in Tables 30 and 31.

Analytical Chemistry Laboratories (X-10 Site). The precision of the uranium and thorium control results reported for this quarter continues to be very good for both Laboratories 3019 and 4500; however, the accuracy of the uranium results reported from Laboratory 3019 and the thorium results reported from Laboratory 4500 are not as good as was observed in previous months.

A definite negative bias continues to persist for the colorimetric test results, and a trend toward high values was observed for the fluorometric test results reported from Laboratory 3019. Remedial action is indicated in both instances.

The thorium values for the lower concentration, 47 μg/ml, of thorium reported from Laboratory 4500 indicate that a definite negative bias exists and remedial action is recommended.

The control results reported for uranium and thorium for this period are summarized in Table 32.

TABLE 30. STATISTICAL EVALUATION OF THE PRECISION AND ACCURACY OF TEST RESULTS REPORTED FOR STANDARD EUTECTIC CONTROL SOLUTIONS

DETERMINATION	METHOD	NUMBER OF DETERMINATIONS	MAGNITUDE OF MEASURED QUANTITY	CONCENTRATION (μg/ml)		STANDARD DEVIATION (%)	CONTROL LIMITS* (%)
				Known	Determined		
Cr	$HClO_4$-diphenylcarbazide	19	Optical density < 0.1	1.8 to 2.7	1.7 to 2.5	7.5	15
		9	Optical density > 0.1	4.5	4.5	3.5	7
Ni	Dimethylglyoxime-$K_2S_2O_8$	27	Optical density > 0.1	6.3 to 8.9	6.3 to 8.8	4	8
Fe	*o*-Phenanthroline	24	Optical density > 0.1	5.3 to 7.5	5.5 to 7.8	3	6
Zr	Phenylarsonic acid	25	~0.13 g	**	12.61***	0.5	1.0
U	Potentiometric titration	31	~4 ml	**	2.95***	1.5	3.0

*95% probability level.
**No values previously established for the zirconium and uranium concentration of the eutectic solutions.
***mg/ml.

TABLE 31. STATISTICAL EVALUATION OF THE PRECISION OF THE TEST RESULTS REPORTED FOR SOLID EUTECTIC CONTROL MATERIAL

MATERIAL NO.	SAMPLE CONDITION	DETERMINATION	METHOD	NO. OF DETERMINATIONS	$\bar{X}$ (μg/ml)	STANDARD DEVIATION (%)	CONTROL LIMITS* (%)
14	Treated	U	Potentiometric titration	8	5.55**	2.0	4.0
	Untreated			8	5.86**	1.0	2.0
	Treated	Ni	Dimethylglyoxime-$K_2S_2O_8$	8	120	30	60
	Untreated			12	1900	18	35
	Treated	Cr	Diphenylcarbazide-perchloric acid	6	< 20		
	Untreated			11	300	15	30
	Treated	Fe	*o*-Phenanthroline	9	135	23	45
	Untreated			10	1780	12	25
12	Treated	Ni	Dimethylglyoxime-$K_2S_2O_8$	8	665	26	50
	Untreated			10	2170	13	25
	Treated	Cr	Diphenylcarbazide-perchloric acid	6	< 20		
	Untreated			8	910	12	25
	Treated	Fe	*o*-Phenanthroline	8	260	9	20
	Untreated			11	1990	11	20

*95% probability level.
**mg/ml.

TABLE 32. URANIUM AND THORIUM CONTROL PROGRAMS

CODE NO.	LABORATORY NO.	DETERMINATION	METHOD	NUMBER OF DUPLICATES	CONCENTRATION (μg/ml)	CONTROL LIMITS (Limit of error, %)*		DETERMINATIONS OUTSIDE CONTROL LIMITS (%)	BIAS
						Found	Established		
E-1	4500	U	Fluorometric	59	2.5	7	10	0	None
E-1	3019	U	Fluorometric	189	2.5	9	11	8	Positive
D-2	4500	U	Colorimetric (thiocyanate)	60	506	1.8	2.2	0	None
D-2	3019	U	Colorimetric (thiocyanate)	188	506	2.2	3.0	1	Negative
Th-1	4500	Th	Colorimetric (thoron)	17	53	1.0	3.4	4	None
Th-5	4500	Th	Colorimetric (thoron)	43	47 (mg/ml)	4.0	3.4	50	Negative
Th-3	4500	Th	Colorimetric (thoron)	17	85	1.0	2.2	0	None
Th-4	4500	Th	Colorimetric (thoron)	43	93	2.4	2.2	9	Positive

*95% probability level.

SERVICE ANALYSES

H. P. House

ANALYTICAL SERVICES FOR THE ANP PROJECT

L. J. Brady J. R. Lund

The adaptation of methods for special problems and the analysis of zirconium fuels and various related zirconium fluoride mixtures and compounds has accounted for the major portion of the work of the ANP Analytical laboratory during this quarter. A discussion of the specific problems encountered, along with a somewhat detailed classification of the work according to types of materials analyzed, number of samples, groups requesting analyses, and components determined, appears in the ANP Quarterly Progress Report.[1]

Work other than that directly related to the analysis of fuels or fuel components included the analysis of inert gases to determine the oxygen content for the Maintenance Shops group, and the determination of the sodium monoxide content of sodium samples for the General Electric Co.

During the latter part of the quarter, the Reactor Chemistry group investigated the properties of fluoride mixtures containing aluminum or beryllium fluoride in the presence of zirconium. The separation of these components from zirconium and uranium has presented some difficulties in the analysis of samples of this type.

A total of 1050 samples was received and 1118 sample analyses were reported during the period, thus reducing the backlog of samples from 271 to 203. Of the samples analyzed, approximately 80% were submitted by the Reactor Chemistry group and 15% by the ANP Experimental Engineering Section. A summary of the work is presented in Table 33.

[1] H. P. House, L. J. Brady, and W. F. Vaughn, "Service Analysis," *ANP Quar. Prog. Rep. Sept. 10, 1952*, ORNL-1375, p. 163.

TABLE 33. SUMMARY OF ANALYTICAL SERVICES WORK AT Y-12 SITE FOR PERIOD JUNE 8 THROUGH SEPTEMBER 5, 1952

	NO. OF PERSONNEL		ORNL DIVISIONS REQUESTING ANALYSES								
	TECHNICAL	NONTECHNICAL	ANP	ELECTROMAGNETIC RESEARCH	ISOTOPE RESEARCH AND PRODUCTION	MATERIALS CHEMISTRY	REED	CHEMISTRY	MISCELLANEOUS	Y-12	TOTAL DETERMINATIONS
GROUP MAKING ANALYSES			NUMBER OF DETERMINATIONS								
HRP	3	10					11,837	242			12,079
ANP	4	13	1581	79		7,860			3	201	9,724
Raw Materials	5	9	169	9	23	7,232	20			81	7,534
Metals and Alloys	1	1	46	1			520				567
Miscellaneous Materials	2	2			471	973				5	1,449
TOTAL	15	35	1796	89	494	16,065	12,377	242	3	287	31,353

ANALYSIS OF ORES AND RELATED MATERIALS

W. F. Vaughan

The methods for the analysis of ores, residues, and leach solutions remained essentially unchanged during this period. Most of the samples received by the Laboratory were derived from Bartow clay and Marysvale ore. The investigation of methods of extracting uranium from these materials has resulted in the use of many organic and inorganic extractants. Among those tested, phosphonic and phosphinic acids have been used frequently. It was found that ores that had been treated with these acids were best decomposed by ignition followed by treatment with a mixture of nitric and perchloric acids. Components of major interest included uranium, iron, aluminum, calcium, sulfates, nitrates, phosphates, and silicon dioxide.

A number of samples of $UO_2HPO_4 \cdot xH_2O$ were analyzed for phosphate by this laboratory. Ion-exchange columns were used very effectively in removing the cations, and good results were obtained in the subsequent determination of phosphate.

A new fluorophotometer, model Q-1165, has been received and is now being calibrated for use in the fluorometric determination of uranium. With this instrument, smaller samples are required; however, the results obtained to date for uranium have been slightly higher, although more precise, than those observed with the older fluorometer.

Miscellaneous Analyses. There was an increase in the number of miscellaneous samples received during the quarter. The major portion of the work consisted of the analysis of amalgams of the alkali metals and solutions of alkali in organic solvents. The separation of the alkalies from the matrix in the amalgams has proved to be very time consuming, although the final determination that employs the flame photometer is relatively simple. The removal of the organic material from samples of alkali dissolved in organic solvents, prior to determining the alkali content, has proved to be rather difficult.

Samples of partially nitrated urine specimens were submitted by the Health Physics Division and were analyzed for calcium, magnesium, sodium, potassium, copper, phosphates, chlorides, and sulfates.

ANALYTICAL SERVICES FOR THE HRP

A. F. Roemer, Jr.

The analytical services for the HRP consisted of the analysis of fuel solutions, uranium trioxide slurries uranyl sulfate, and uranium fluoride solutions for uranium and corrosion products. There was a decided increase in the number of samples from the dynamic tests, whereas the number of samples from static tests decreased. As added emphasis was placed on tests employing uranyl fluoride solutions of high concentration (300 g/l), more of these samples were analyzed, and there was also a slight increase in the number of samples of uranyl sulfate solutions of high concentration.

During the quarter the laboratory was moved into new facilities provided on the second floor of Building 9204-1. As the result of an increase in efficiency and a slight drop in the number of samples received, the number of laboratory personnel was decreased from 16 to 12.

A total of 2227 samples was received and 2205 analyses were reported during the quarter. The number of determinations totaled 12,079, and there was a backlog of 243 samples at the close of the period.