CENTRAL RESEARCH LIBRARY
DOCUMENT COLLECTION

ORNL-1454
Special Distribution
184a

MARTIN MARIETTA ENERGY SYSTEMS LIBRARIES
3 4456 0360647 1

PREPARATION OF REPORTS

OAK RIDGE NATIONAL LABORATORY
CENTRAL RESEARCH LIBRARY
CIRCULATION SECTION
4500N ROOM 175
LIBRARY LOAN COPY
DO NOT TRANSFER TO ANOTHER PERSON
If you wish someone else to see this report, send in name with report and the library will arrange a loan.
UCN-7969 (3 9-77)

OAK RIDGE NATIONAL LABORATORY
OPERATED BY
CARBIDE AND CARBON CHEMICALS COMPANY
A DIVISION OF UNION CARBIDE AND CARBON CORPORATION
UCC
POST OFFICE BOX P
OAK RIDGE, TENNESSEE

ORNL-1454

This document consists of 31 pages

Copy 184 of 450 copies Series A

INFORMATION AND REPORTS DIVISION

PREPARATION OF REPORTS

P. M. Reyling

DATE ISSUED

MAR 4 1958

OAK RIDGE NATIONAL LABORATORY
Operated by
CARBIDE AND CARBON CHEMICALS COMPANY
A Division of Union Carbide and Carbon Corporation
Post Office Box P
Oak Ridge, Tennessee

MARTIN MARIETTA ENERGY SYSTEMS LIBRARIES

3 4456 0360647 1

INTERNAL DISTRIBUTION

1. C. E. Center
2. C. E. Larson
3. A. M. Weinberg
4. E. J. Murphy
5. E. H. Taylor
6. E. D. Shipley
7-8. L. B. Emlet (Y-12)
9. J. A. Swartout
10. R. C. Briant
11. J. H. Buck
12. H. E. Seagren
13. E. T. Henson
14. P. W. Rueff
15. Hezz Stringfield
16. D. W. Cardwell
17. E. A. Bagley
18. L. P. Riordan
19. K. A. Fowler
20. M. E. Ramsey
21. D. D. Cowen
22. J. S. Felton
23. M. T. Kelley
24. G. H. Clewett
25. J. H. Frye, Jr.
26. S. C. Lind
27. F. L. Steahly
28. D. S. Billington
29. R. S. Livingston
30. C. P. Keim
31. C. E. Winters
32. A. Hollaender
33. K. Z. Morgan
34. A. H. Snell
35. F. C. VonderLage
36. C. S. Harrill
37. A. D. Mackintosh
38. E. W. Parrish
39. F. W. Wuest
40. P. Kofmehl
41. B. G. Rowland
42. C. H. Marsh
43. B. G. Catron
44. M. V. Firmin
45. W. P. Lewis
46. R. S. Cockreham
47. N. T. Bray
48. E. J. Witkowski
49. H. Blauer
50. J. A. Cox
51. A. F. Rupp
52. Laboratory Shift Supervisory (E. M. King)
53. H. P. Raaen
54. S. A. Reynolds
55. P. F. Thomason
56. C. Feldman
57. T. E. Willmarth
58. G. W. Leddicotte
59. O. Menis
60. J. C. White
61. W. K. Miller
62. U. Koskela
63. D. E. LaValle
64. W. K. Eister
65. W. B. Lanham
66. A. J. Miller
67. F. R. Bruce
68. F. L. Culler
69. H. K. Jackson
70. M. A. Bredig
71. K. A. Kraus
72. G. H. Cartledge
73. R. W. Stoughton
74. E. R. VanArtsdalen
75. E. G. Bohlmann
76. W. L. Marshall
77. H. F. McDuffie
78. C. H. Secoy
79. A. R. Brosi
80. G. W. Parker
81. C. J. Hochanadel
82. G. H. Jenks
83. H. A. Levy
84. R. Livingston
85. W. H. Baldwin
86. C. J. Collins
87. C. J. Borkowski
88. W. R. Grimes
89. K. B. Brown
90. H. M. McLeod, Jr.
91. E. J. Boyle
92. E. C. Miller
93. L. K. Jetter

94. W. D. Manly
95. J. E. Cunningham
96. S. D. Fulkerson
97. R. J. Gray
98. B. S. Borie, Jr.
99. W. H. Bridges
100. P. Patriarca
101. E. S. Bomar, Jr.
102. R. B. Oliver
103. D. C. Vreeland
104. G. M. Adamson
105. G. P. Smith
106. W. J. Fretague
107. J. T. Howe
108. S. E. Dismuke
109. R. H. Kernohan
110. G. W. Kielholtz
111. J. C. Wilson
112. W. E. Taylor
113. G. T. Murray
114. J. H. Crawford, Jr.
115. J. W. Cleland
116. M. C. Wittels
117. O. Sisman
118. W. W. Parkinson
119. C. D. Bopp
120. J. B. Trice
121. T. H. Blewitt
122. W. J. Sturm
123. A. F. Cohen
124. G. E. Klein
125. W. B. Cottrell
126. W. K. Ergen
127. A. P. Fraas
128. E. S. Bettis
129. R. W. Schroeder
130. H. W. Savage
131. E. R. Mann
132. R. N. Lyon
133. H. F. Poppendiek
134. C. B. Graham
135. S. E. Beall
136. W. M. Breazeale
137. R. Baldock
133. E. J. Slaughter
139. F. J. Davis
140. L. B. Farabee
141. H. K. Richards
142. R. J. Morton
143. J. C. Hart
144. J. Neufeld
145. E. E. Anderson
146. H. H. Hubbell
147. E. O. Wollan
148. M. E. Rose
149. J. L. Fowler
150. W. M. Good
151. W. H. Jordan
152. P. R. Bell
153. J. L. Meem
154. E. P. Blizard
155. C. E. Clifford
156. S. Bernstein
157. L. D. Roberts
158. C. G. Shull
159. T. A. Welton
160. A. D. Callihan
161. E. D. Klema
162. G. E. Evans
163. R. B. Briggs
164. E. P. Epler
165. J. J. Stone
166. W. E. Thompson
167. J. V. Francis
168. C. L. Perry
169. J. Moshman
170. R. A. Charpie
171. J. W. Millsaps
172-183. P. M. Reyling
184-185. Central Research Library
186-450. Central Files

CONTENTS

	Page
PLANNING THE ROUGH DRAFT	1
Writing Procedure	1
Component Parts	1
Lengthy Reports	3
Medium-Length Reports	4
Short Reports	4
ILLUSTRATION	4
PHOTOGRAPHY	11
COMPOSITION	21
REPRODUCTION	24
Photo-Offset Process	24
Multilith Offset Process	24
Ozalid Process	24
Photostat Process	25

THE PREPARATION OF REPORTS

This report is intended to serve as a guide in producing high-quality, uniform reports at the Oak Ridge National Laboratory. In any research laboratory the product is basic information or technology, which must be recorded in report form, primarily for the dissemination of the information, but, also, for a permanent record. Since reports are the major physical product of research, and ORNL reports represent the Laboratory to the people at other AEC installations and in industry, these reports obviously should be in the best form consistent with reasonable economy.

A service group, known as the Information and Reports Division has been organized to obtain uniform reports at ORNL. Figure 1 shows the organization of this division, which prepares for reproduction, reproduces, and distributes all reports that are circulated outside the Laboratory.

The preparation of the master copies of major reports from rough draft form is accomplished in the Technical Publications Department. Editorial, drafting, illustration, proofreading, composition, and make-up services are provided for the Laboratory by this group.

The master copies of major reports are printed by the Reproduction Department by the photo-offset process. Other reproduction processes currently available are Ozalid, photostat, and offset printing from Multilith paper plates.

Finished reports are distributed by the Central Files Department, and a limited number of copies are stored. This department is also responsible for the storage of all master copies of the various documents.

Figure 2 outlines the work involved in publishing a typical report by the photo-offset process. This may appear to be a cumbersome procedure, but experience has dictated this minimum for obtaining high-quality work. It has been demonstrated that good illustrations cannot be made without this work sequence, regardless of the type of process used on the text.

There are many satisfactory ways to prepare a good report, and the style of the report varies widely with personal opinions and tastes. However, it is most desirable that uniform practices be used in the preparation of ORNL reports. The style currently in use has been reviewed by many technical people throughout the country, and, in general, it has received very favorable comment.

Some phases of style selection can be based upon technical considerations. This is true of the selection of the two-column style,[1,2,3] currently in use. Various studies have shown that this column width reduces reading time and improves over-all readability. Type faces are selected for appearance and readability,[1,2,3] and to obtain a maximum amount of copy on a fixed page size.

One of the major features of a good technical report is simplicity. Most engineering or research schools touch on the matter of simplicity at some point in their respective curriculums. However, the complexities encountered in many technical fields have a tendency to creep into the over-all style of reporting. Of all the fields of endeavor, it certainly is most appropriate for the engineering and research fields to present to the reader the simplest and most forthright reports possible.

PLANNING THE ROUGH DRAFT

Writing Procedure. In the course of writing a report, the author normally includes the following steps (1) investigation and study, (2) outline, (3) rough draft, (4) review. The investigation usually involves compiling data and making literature surveys prior to and during the course of an experiment or test. The collected results should be carefully analyzed to avoid the use of fragmentary or disorganized information and to determine the most effective outline for presentation. The rough draft should be prepared directly from the outline, and particular attention should be given to the technical accuracy of statements made. Good sentence structure and grammar are desirable but, if poor, can be corrected by the editorial personnel. After completion of the rough draft, the entire document should be reviewed critically, with emphasis on the technical content. Reports to be distributed externally will be impartially reviewed by the editorial staff of the Technical Publications Department, if desired. Recommendations for revisions will be discussed with the author prior to make-up and printing of the document.

Component Parts. The main parts of a report are the title, abstract, introduction, body, conclusion, summary, and appendix. Not all these parts need be used in a report, and a judicious choice of which should be used is essential.

---

(1) *J. Research Nat. Bur. Standards* 48, No. 5, 349-398 (1952)

(2) *J Aeronaut Sci* 19, No. 7, 433-504 (1952).

(3) *J Applied Phys.* 23, No. 7, 701-804 (1952).

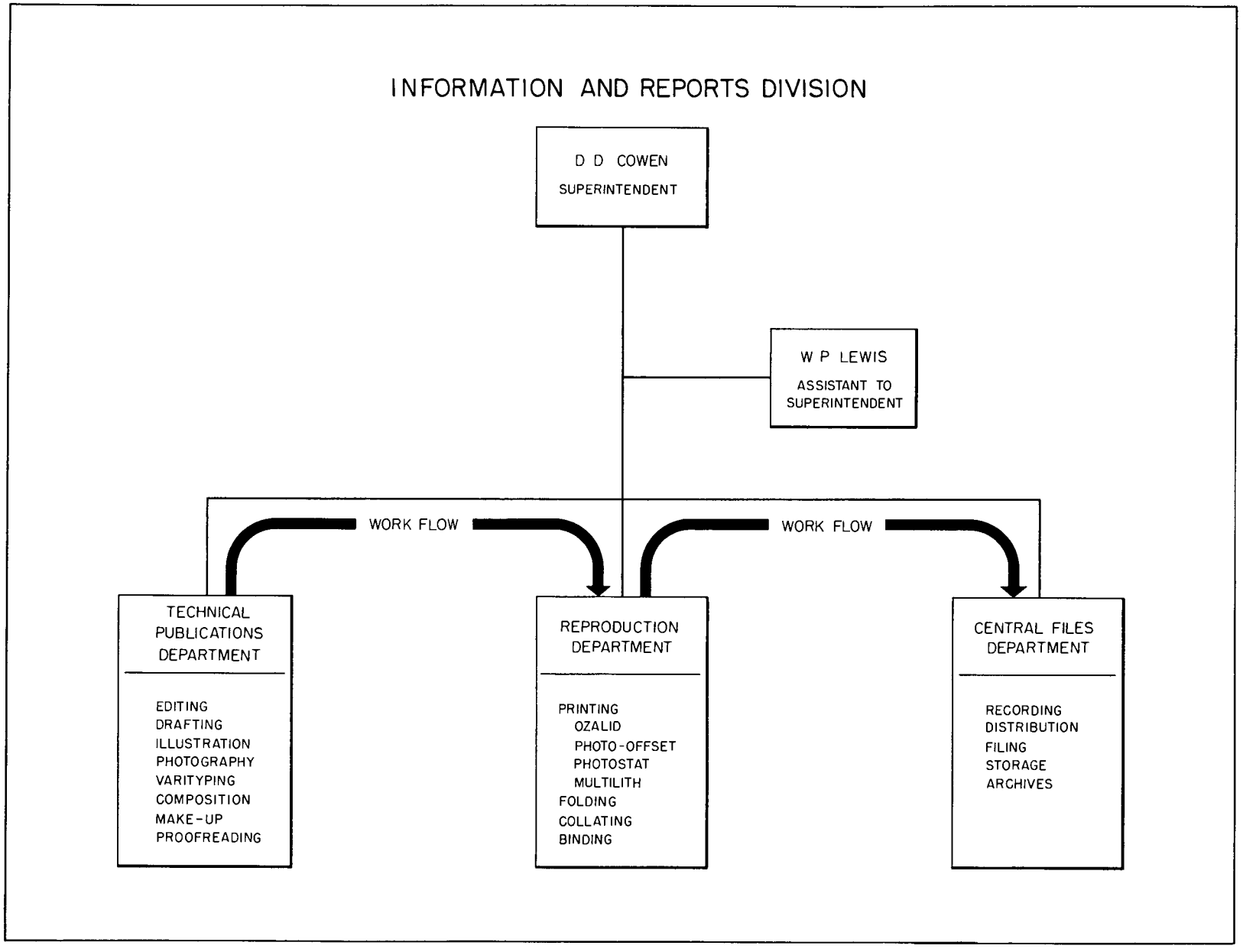

Fig. 1. Divisional Organization.

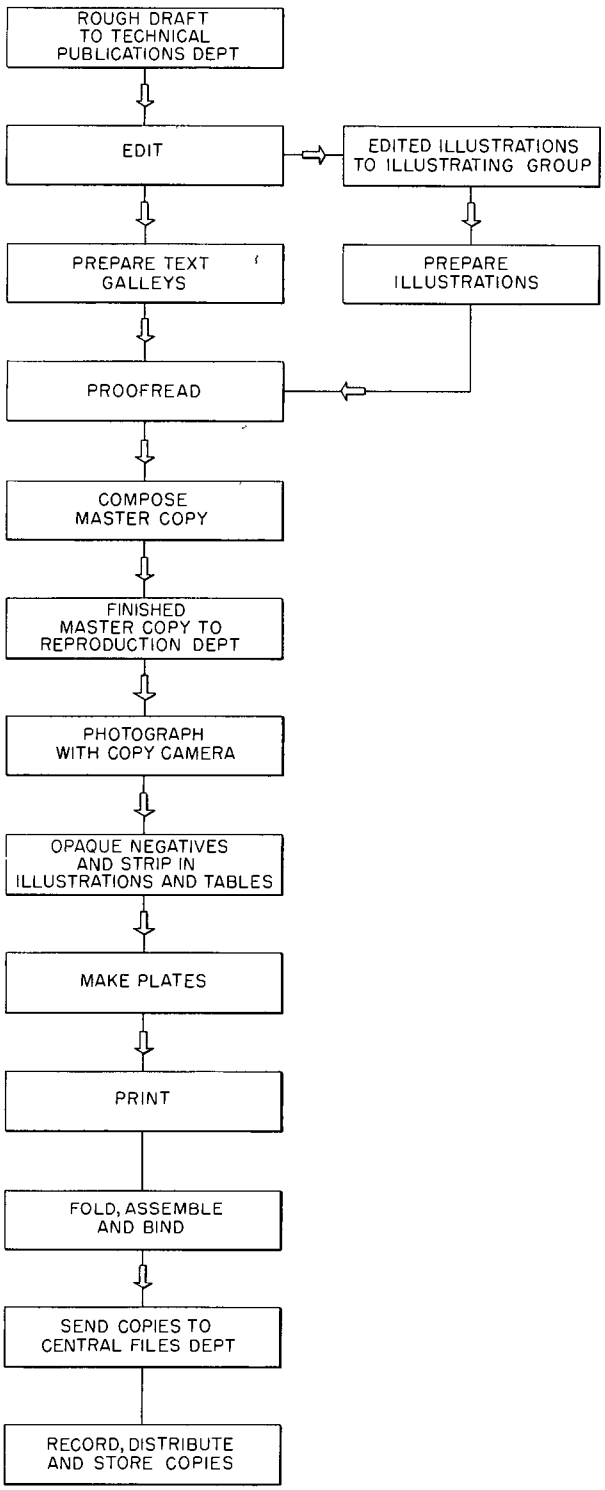

Fig. 2. Work Flow for the Photo-Offset Process.

Many reports have fallen into an academic rut because an attempt has been made to utilize and contain all these parts and their titles physically in one document. Such reports are difficult to digest and many readers often give up after partial perusal. A good report should serve all interests equally. The busy executive should be able to read a concise summary that states the problem and major findings and gives enough background information to tie the subject to associated interests. The technical or research readers should be able to obtain a summarized or a complete picture, as desired. This can be accomplished by separating the detailed experimental procedures and results and appended material from the general discussion in the body of the text. Although these types of material should be obviously separated, they should occur in appropriate relationship to other experimental or detailed material.

Lengthy Reports. In lengthy reports covering projects or extensive subjects, a desirable outline is the following

1. Summary
2. Introduction
3. Body
4. Conclusions (where required)

In the lengthy report, the summary is a very significant part, since an abstract would be difficult to prepare and would be of questionable value. In the summary, the major conclusions should be stated to provide the reader with an over-all picture of the status of the project or the results of a study. In project reports covering many fields and subjects, the report should be sectionalized and a brief summary included in the beginning of each major section. The brief summaries should supplement but not replace the general over-all project summary. In these complex reports, a high degree of readability will be achieved by treating each major subject as a short report.

The use of appendixes to a lengthy report should be minimized or eliminated. A more modern approach to the problem of appended material or detailed experimental results is to retain the material in the body of the report and use smaller type[4] to separate it from the general discussion in that section. Such a presentation has the advantage of retaining detailed information in its proper place while allowing the reader to pass over such information if he desires a more general review of the report.

[4] *Chemistry Division Quarterly Progress Report for Period Ending December 31, 1951*, ORNL-1260, p 58-65, 89.

Medium-Length Reports. In medium-length topical reports, a good order for the parts is the following

1. Summary
2. Introduction
3. Body
4. Conclusions (where required)

If separate conclusions are incorporated in the report, the summary should contain a generalized statement of the conclusions. Conclusions should not be handled as a separate part of the report unless they are lengthy or there are many individual minor conclusive statements that would make the summary too bulky. Appended material should be fitted appropriately into the body of the report.

Short Reports. In short topical reports, an ideal choice for the order of the parts is the following

1. Summary
2 Introduction and body

In these reports, the summary serves equally well as an abstract, and the author's conclusions may be contained therein. Introductory material, if required, should be the opening paragraphs of the body of the report. This type of report, when properly prepared, should be the most easily read document an author can produce.

In all reports the summary should show as a physical title. In a few special cases in which appended material must be included as such, the appendix should also show as a physical title. Introduction and conclusion should appear as physical titles only in cases in which the subject matter demands it.

References are a necessity in technical reports, and authors should be careful to give adequate information. As a minimum, a reference should include author's name, title of report or publication, report number, and page number.

ILLUSTRATION

Illustrations are an essential part of any report. In many cases a good illustration conveys much more information than many pages of written matter describing the same data. Each illustration must be an integral part of the report and should be discussed or appropriately referenced in the text. Authors should weigh the value of each illustration in the over-all report and use only those that make a positive contribution.

Certain limitations in size are imposed on all illustrations used in reports by the equipment available for photo-offset reproduction. The maximum finished size of any illustration cannot be more than 11 by 17 in., including margins and binding edge. Each illustration will be sized before the master copy is prepared, the size is determined by the value of the illustration in the copy or by its physical limitations. In general, it is good practice to minimize the number of fold-in (11 by 17 in.) illustrations.

Large illustrations may be used for special work, other than reports. In all cases in which illustrations larger than 11 by 17 in. are required a photographic or Ozalid process must be used for reproduction. Large illustrations are expensive, and to justify this expense they should show information definitely unobtainable from a smaller print.

Usually, reports that contain a large number of illustrations over 11 by 17 in. are poorly prepared. Large drawings containing construction details are out of place in most reports. A general picture or drawing, with additional small sketches of special details, is preferable Readers requiring additional information for construction or study may obtain a set of larger prints designed for that purpose.

Centralizing illustration and drafting service is necessary for obtaining uniform, high-quality work. In a centralized unit, standards are easily maintained, and personnel and equipment can be used efficiently.

In various types of line-cut illustrations, the weights of lines used will determine the over-all clarity of presentation. Properly drawn, thin, India-ink lines are the most satisfactory for good reduction and faithful reproduction. Many illustrations are made in rather large sizes for ease in drawing and lettering and then reduced.

In the following pages some actual illustrations are shown that feature either desirable practice or point out weaknesses. Most of these illustrations have been used in ORNL reports and are shown here the same size as in the report. This size has been used in order to discuss size determination for various illustrations.

Figures 3 and 4 exemplify properly executed illustrations. The details are excellent, although the originals were reduced by 30%. In Fig. 4 the lettering is clean and clear even in the scale on the dividing head.

Figure 5 represents a type of illustration commonly encountered in technical reports. In all

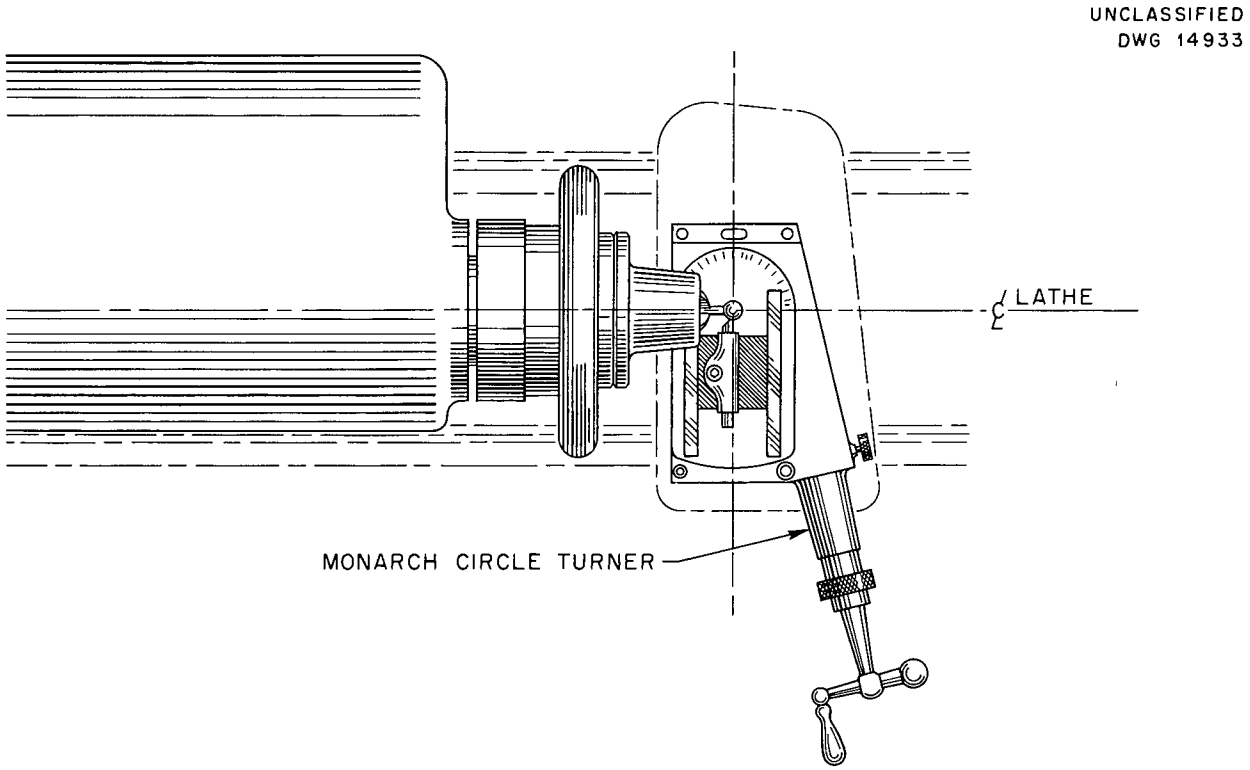

Fig. 3. Arrangement for Machining Spherical X-Ray-Diffraction Specimens.

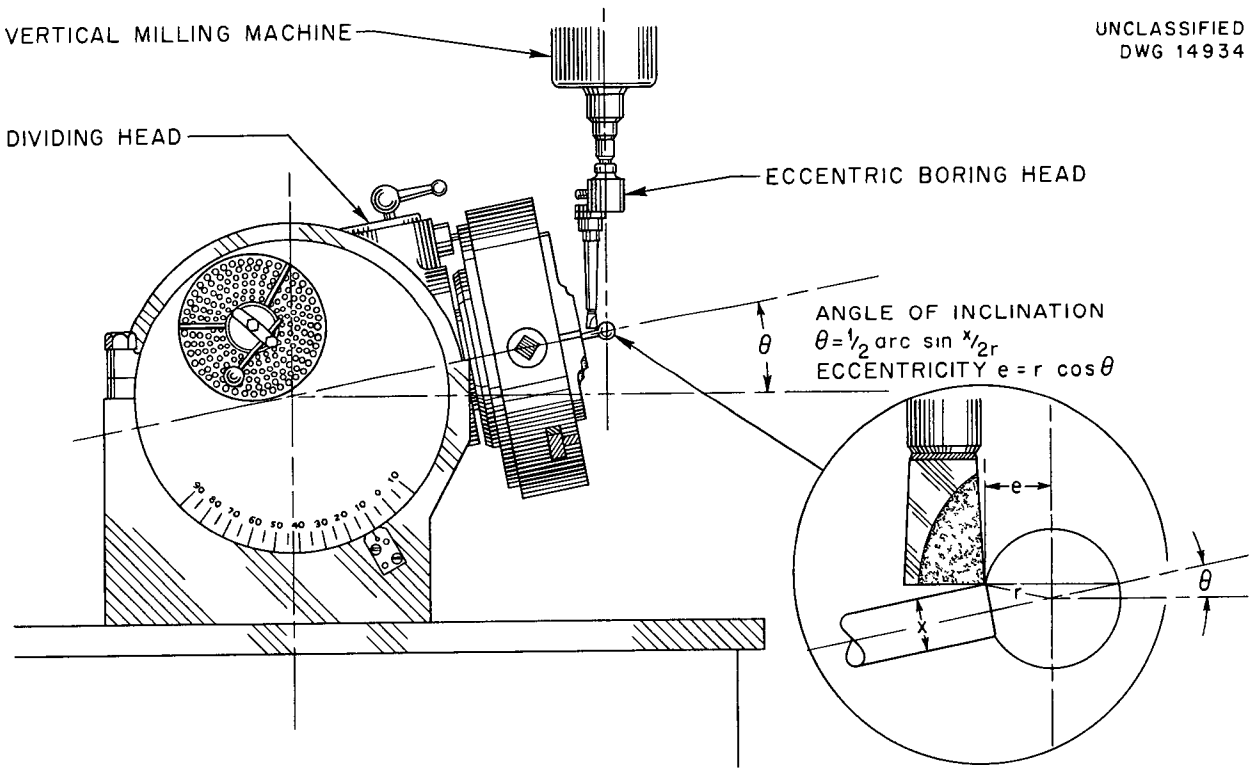

Fig. 4. Preferred Arrangement for Machining Spherical X-Ray-Diffraction Specimens.

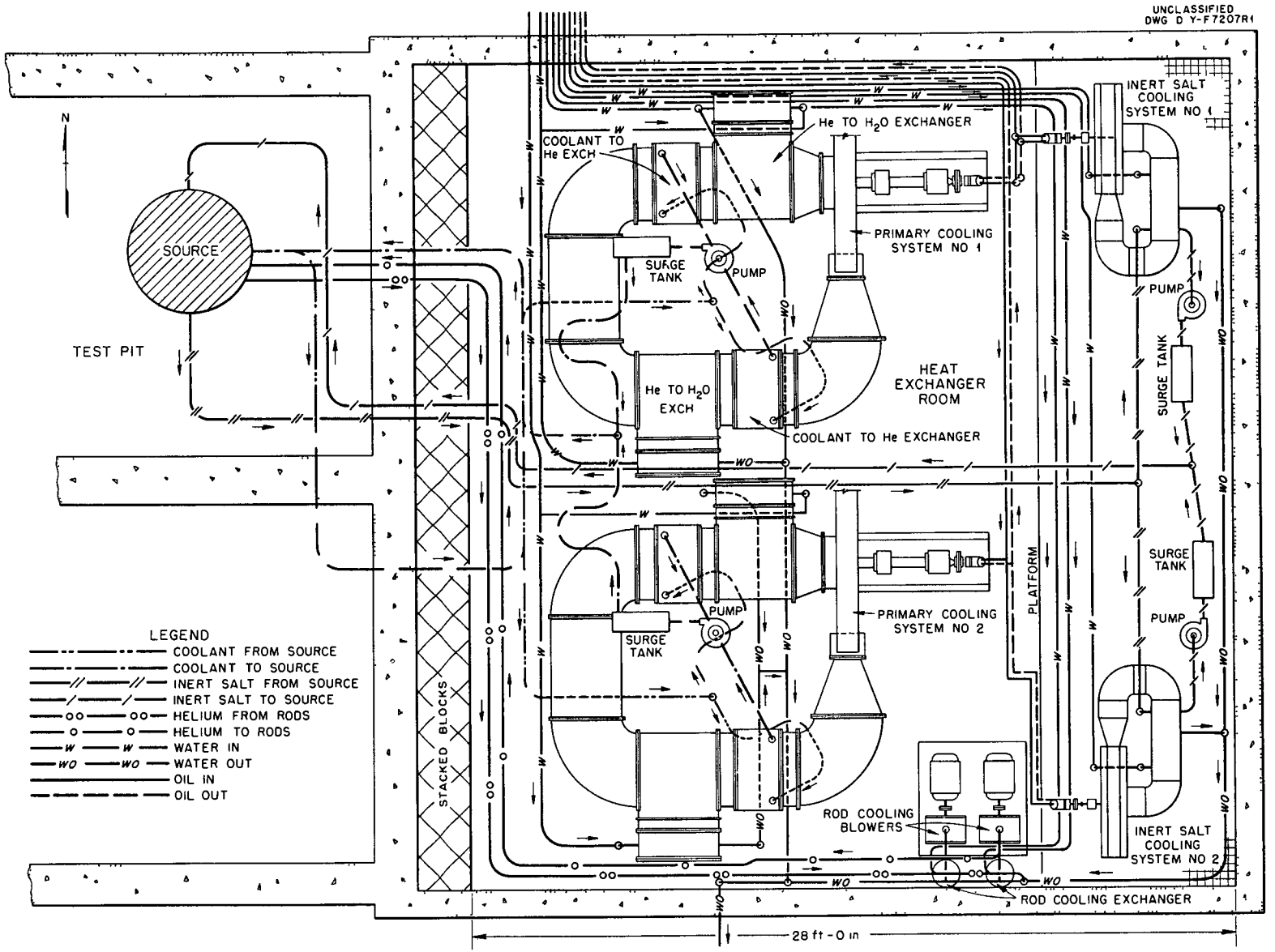

Fig. 5. Fluid Circuit Equipment Arrangement.

illustrative circuit arrangements, the weights of lines are very important. Obviously, the circuit lines are the most important, and as in Fig. 5 they should have more weight than any of the background material. The original drawing for Fig. 5 was reduced 51%. Figure 6 illustrates a satisfactory apparatus drawing. Figure 7 shows another type of detail drawing that was reduced 50% without destroying the pertinent details.

Figure 8 is an unsatisfactory detail illustration, for which the original drawing was prepared in such a size that the details are too small on the final illustration. It was reduced 73%, or down to 27% of the original size. The illustration could be presented with greater clarity by breaking it at section A-A and making detail sketches of each half so that less reduction would be required for the final copy. Another possibility would be to redraw the liner in simpler form without the finer details and group separate sketches of each major detail around the illustration. Much less reduction would be required with such an arrangement and none of the essential details would be lost.

Figure 9 shows a sketch that has been poorly executed and has a nonprofessional appearance. The inlet and outlet connections and the graphite reflector are very crudely drawn. The lettering is ragged, the weight of the letters is entirely too heavy (note letter e), and the choice of capital and lower-case letters is not appropriate. The illustration does not warrant a full page, a two-column, one-half-page cut would be generous, and a one-column, one-third-page cut would be adequate with more professional rendering.

Figures 10, 11, 12, and 13 illustrate proper treatment of various data in graph form. Note that all the figures have light lines for background information, that is, cross sections or grid lines, illustration outline, and other supporting figures. The curves are, appropriately, the heaviest lines in the figures. Obviously, the curve lines must not be made too heavy, or in some instances an error would be introduced. This problem is handled by using light-weight continuous background lines and medium-weight curve lines. Figures 10 through 13 have the following reductions 73, 38, 72, and 41%. These reductions all allow reasonable treatment of the data involved.

Figure 14 illustrates poor rendition of the data shown. The selection of a full page for the two curves is unnecessary and does not clarify the data, an appropriate size would be one column. The title is improperly placed and inadequate, the formula MnF_2 supplies no information regarding the illustration. Also, in this illustration the curves are awkwardly placed in that they must be read at a right angle to the text. With proper planning this fault could have been eliminated. Note that the curve is the lightest line in the figure, the relative importance of the various lines should have been reversed. Figures 15 and 16 have the same faults as Fig. 14, in varying degrees.

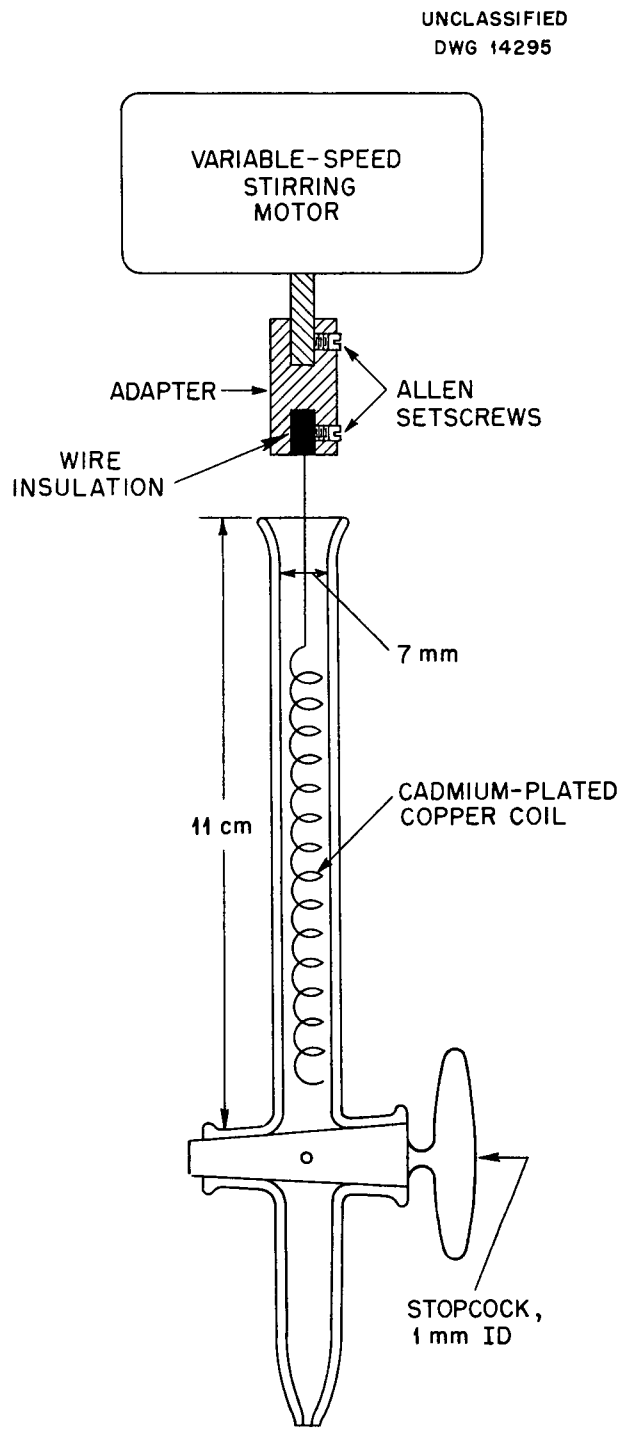

Fig. 6. Microreduction Apparatus.

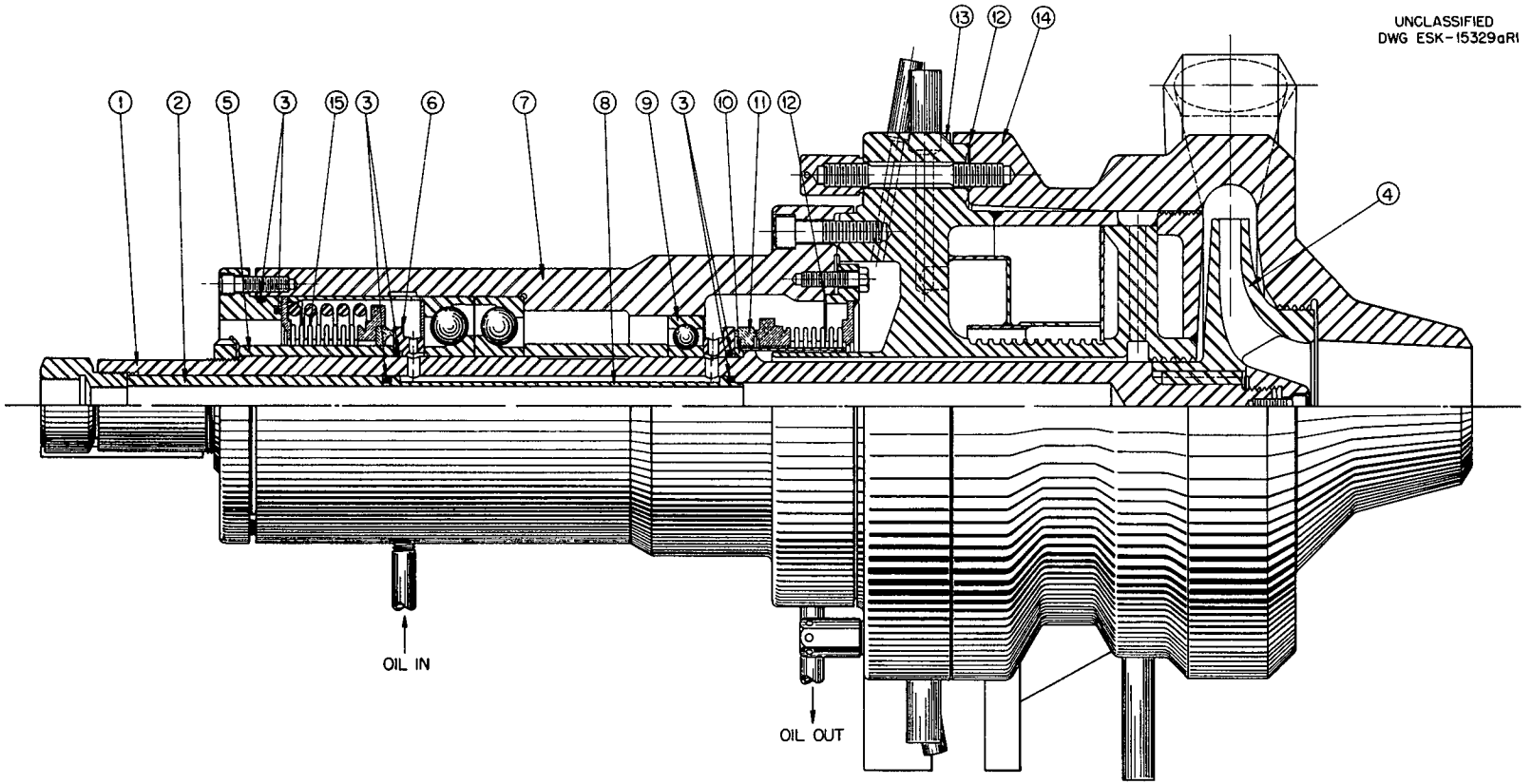

1. Shaft, type-316 stainless steel.
2. Shaft liner spacer, any 300-series stainless steel.
3. "O" ring, material to be recommended by seal manufacturer.
4. Impeller, type-316 corrosion-resistant steel casting.
5. Pressure sleeve, any 300-series stainless steel.
6. Seal face ring, Ontario steel.
7. Bearing housing, type-316 corrosion-resistant steel.
8. Shaft liner, any 300-series stainless steel.
9. Single-row radial ball bearings.
10. Slinger, type-316 stainless steel.
11. Special graphite ring, alternate with seal arrangement.
12. Gasket, copper.
13. Pump body assembly.
14. Impeller casing assembly.
15. Bellows shaft seal.

Fig. 7. Centrifugal Pump.

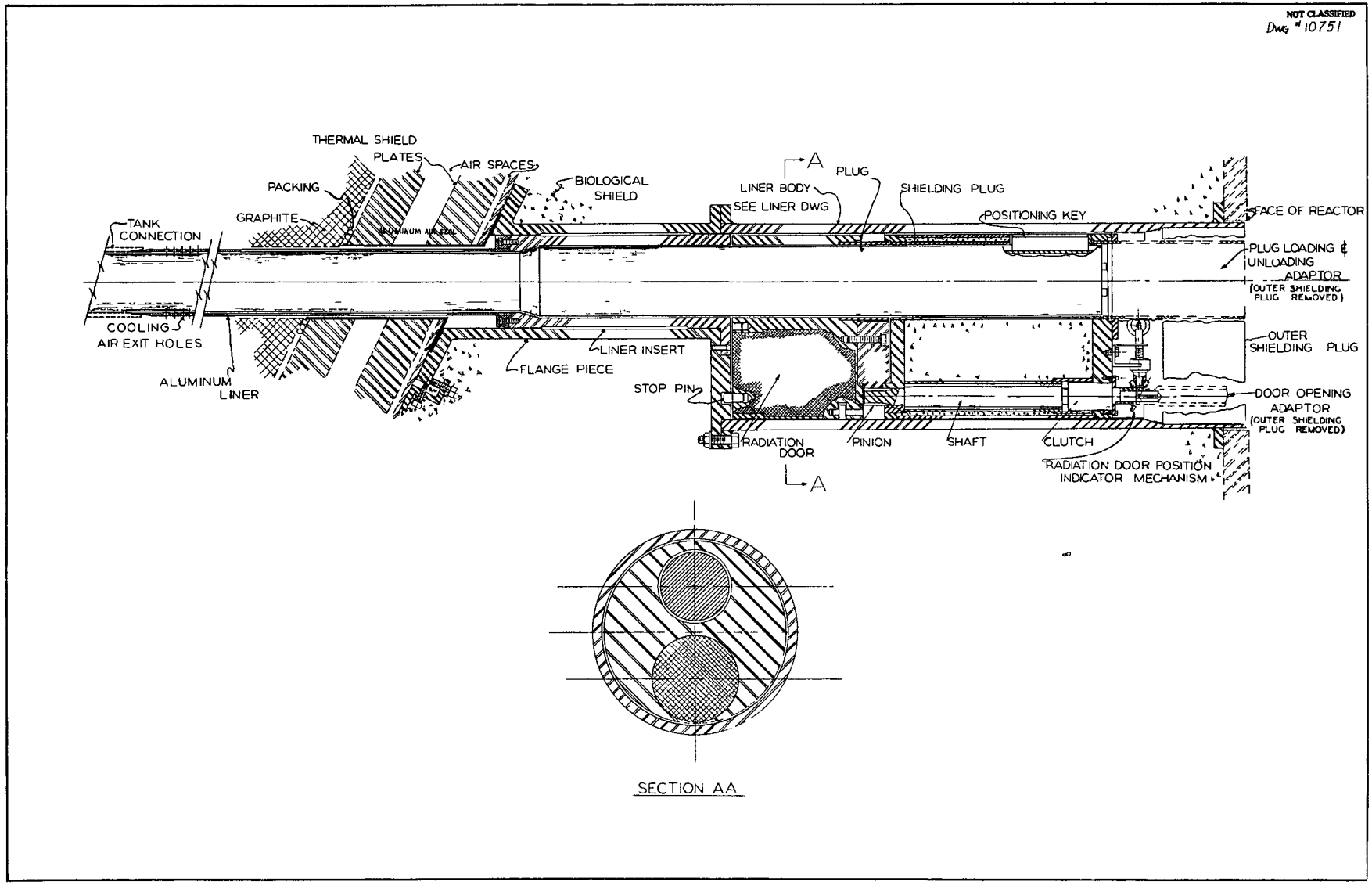

Fig. 8. Typical Beam Hole Liner and Components.

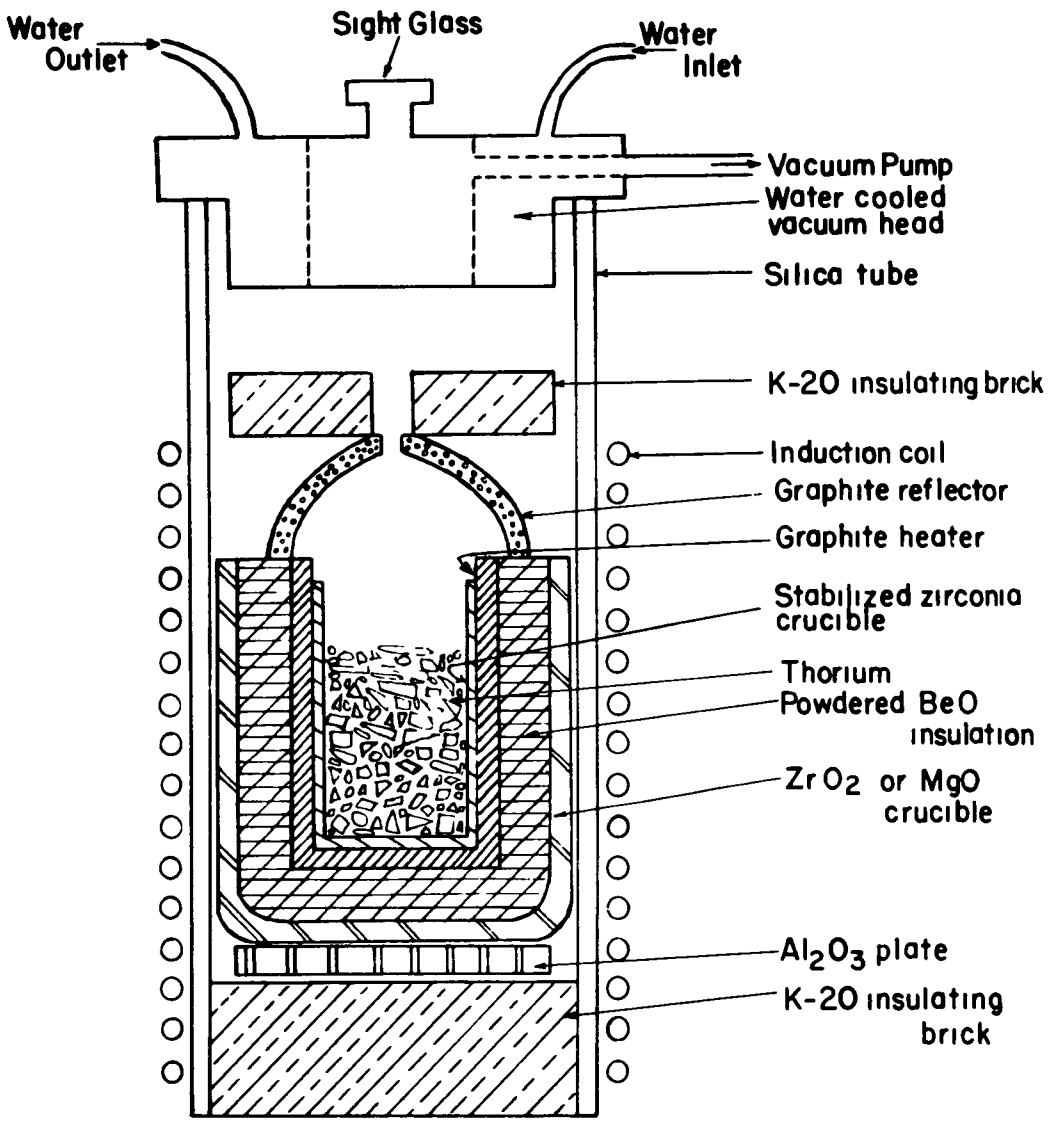

Fig. 9. Schematic Diagram of Silica-Tube Vacuum Furnace.

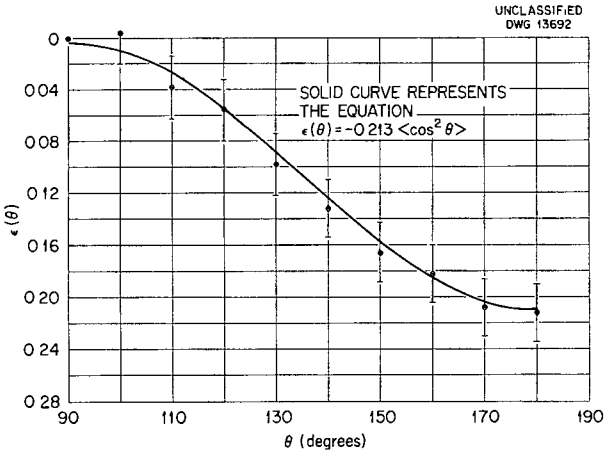

Fig. 10. Angular Distribution of the Coincident Gamma Rays from Hf^{177}.

PHOTOGRAPHY

Photographic illustration can be an asset to any report. However, each photograph should add something to the report and should be appropriately discussed in the text. It is most important that the photograph provide some information that cannot be conveyed readily by other means. Authors should be careful to analyze each layout, prior to exposure of any film, to plan the detail or other requirements. Many photographs have been used in which there was too much detail. If the details are important, it is better practice to make a small photograph of each important detail so that individual treatment will emphasize their value.

Photographs are produced as halftones, which means that the negative is exposed through a fine screen. Currently, a 120-line screen is being used. Halftones are necessary wherever shades of gray are used. Early printers developed the halftone technique to reproduce grays because printer's ink is black, not gray. Ordinarily, if ink is placed on type or a line cut and impressed on paper, the paper is either black in the impressed areas or white elsewhere. By various spacings of lines or varying the sizes of dots different shades of gray can be synthesized. Obviously, as the dots or lines are moved farther apart, the grays will be lighter shades. It is important to understand that broad changes in shades will be reproduced equally well by halftone or line-cut methods. However, fine tones of gray are impossible to produce by line-cut methods. Figures 17 and 18 show a photograph produced by line cut and by halftone techniques.

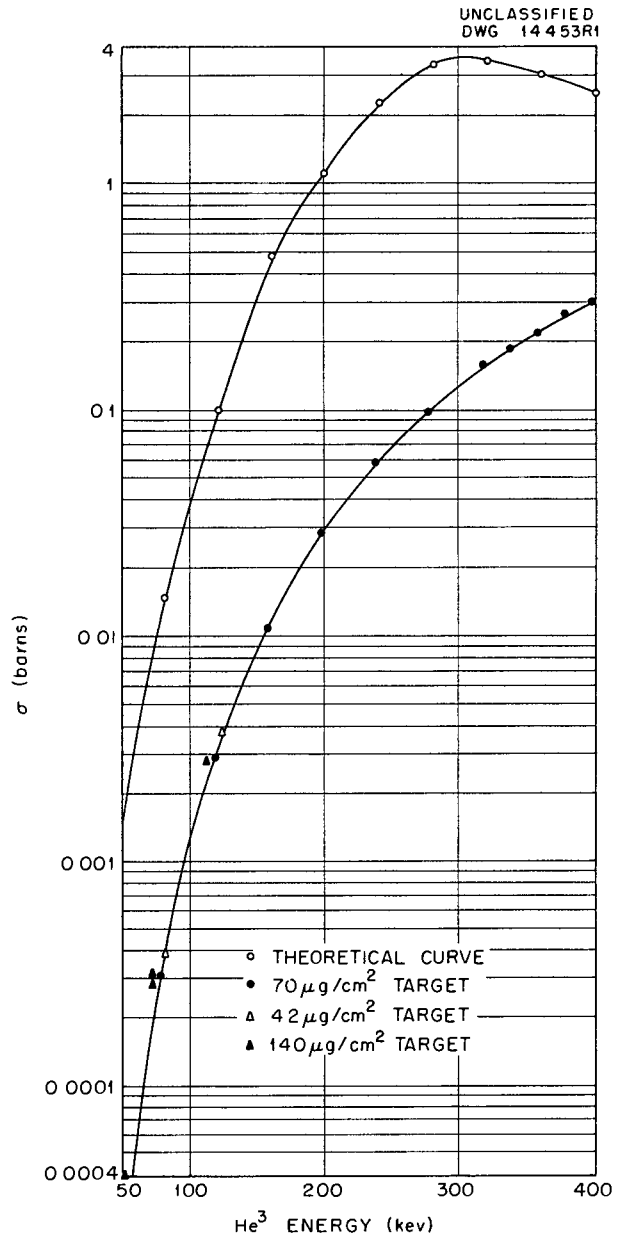

Fig. 11. Yield of Protons from the Reaction $H^2(He^3, H^1)He^4$ with Incident He^3 Bombarding Energy.

One of the most difficult problems is the satisfactory reproduction of photomicrographs and allied work. All of the printer's art is required, and suitable paper must be used for top-quality halftone reproduction. It is absolutely essential that the paper and the plate that has the negative image have no visible grain or imperfections. The philosophy behind the care taken with photomicrographs stems from good reasoning. It is felt that

the printed illustrations should show essentially as much as a good print made in the metallurgist's laboratory. If a large loss in detail is sustained in reproduction, it is useless to print the photomicrograph. Currently, the loss sustained is so slight that it is almost undetectable. Figures 19 through 26 illustrate detailed photographs successfully reproduced.

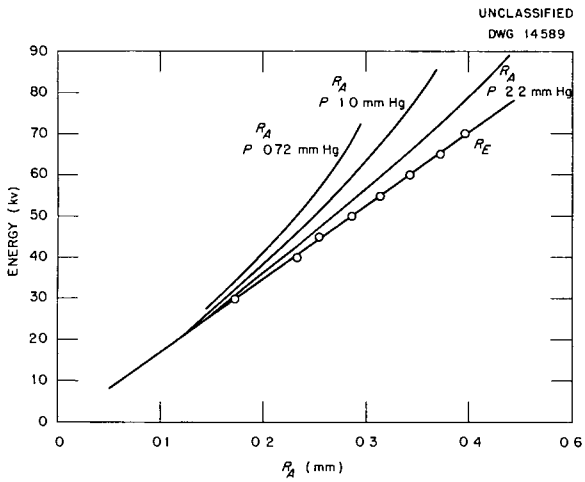

Fig. 12. Range of N_2^+ in Air.

When photomicrographs or similar illustrations are submitted, they should be of such size that their width will not exceed $3\frac{1}{8}$ or $6\frac{1}{2}$ inches. Heights should not exceed 8 inches. It is especially important to hold to these sizes on photomicrographs in order to avoid the necessity of reduction, which might lose some of the essential detail. If the prints are larger than the aforementioned sizes, it is sometimes possible and profitable to crop the illustration so that it satisfies dimension requirements and shows the desired detail. Occasionally, cropping is necessary where nonessential or nonpertinent detail is likely to confuse the illustration.

In the halftone photo-offset process, best reproduction will be obtained from glossy prints. Therefore the positives submitted should have a high-gloss finish. If the illustration has special or explanatory information in the form of call-outs or notes, two clear prints should be provided one with no marking and the other marked with the desired information.

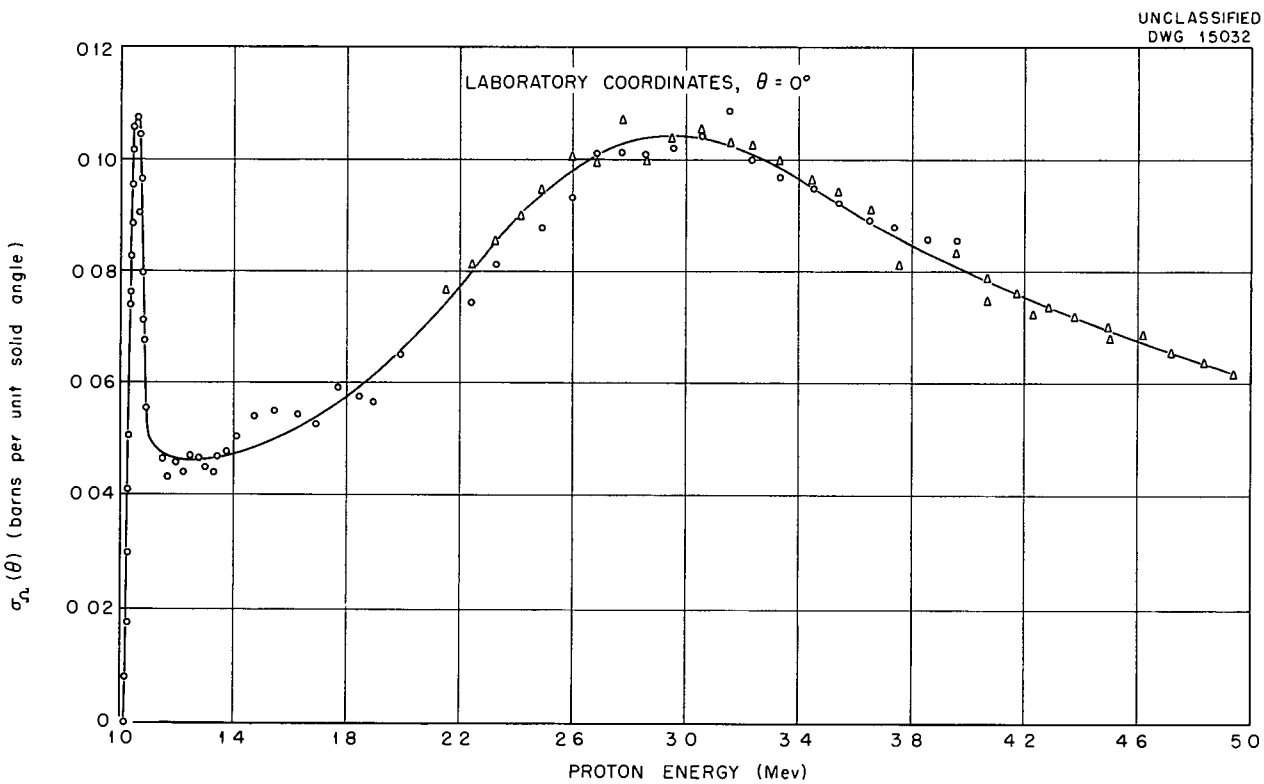

Fig. 13. Differential Cross Section vs. Energy for the $H^3(p,n)He^3$ Reaction.

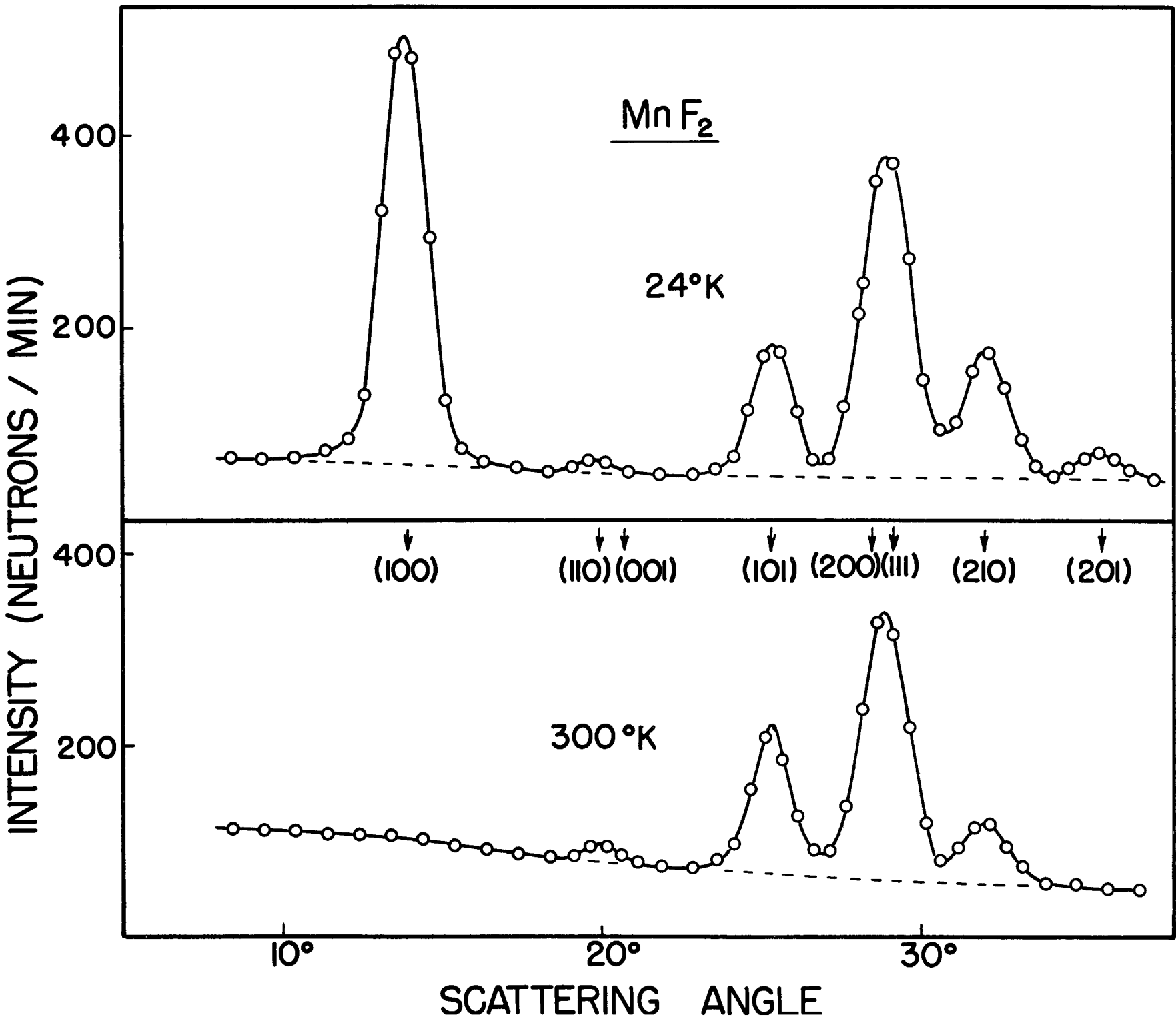

Figure 14

UNCLASSIFIED
DWG. 11469

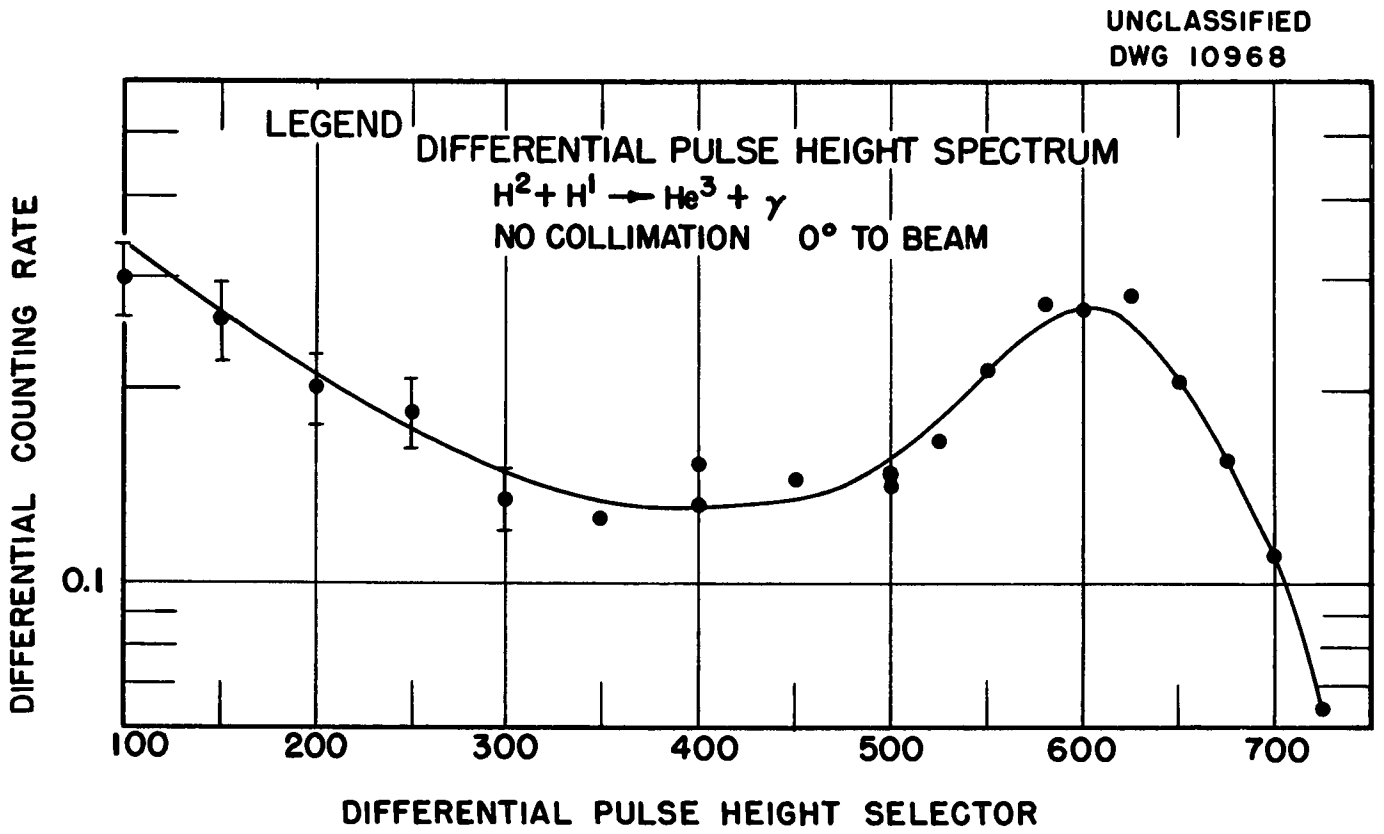
UNCLASSIFIED
DWG 10968
LEGEND
DIFFERENTIAL PULSE HEIGHT SPECTRUM
$H^2 + H^1 \rightarrow He^3 + \gamma$
NO COLLIMATION 0° TO BEAM
DIFFERENTIAL COUNTING RATE
0.1
100
200
300
400
500
600
700
DIFFERENTIAL PULSE HEIGHT SELECTOR

Figure 15

UNCLASSIFIED
DWG 10824 R1

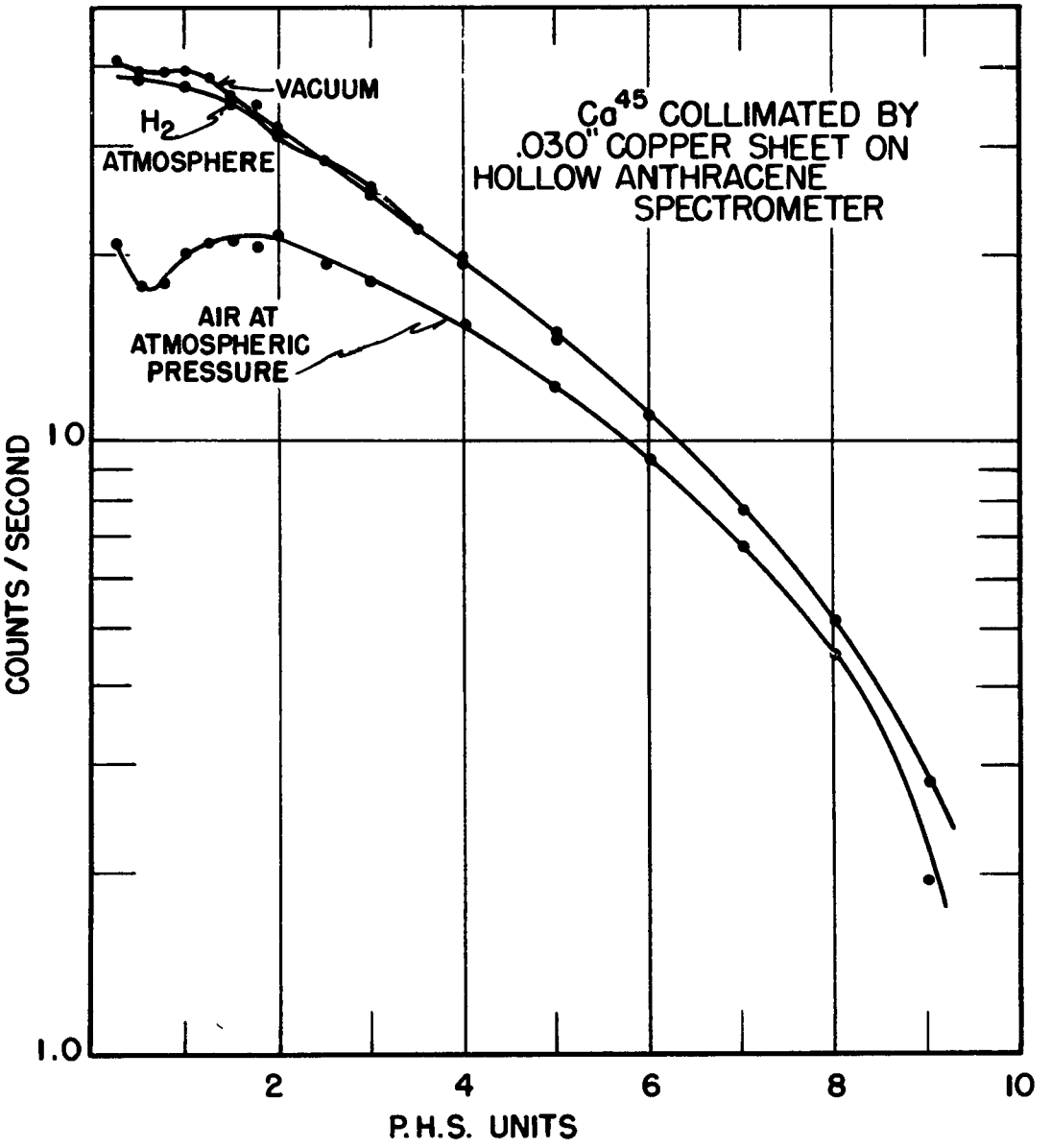

Figure 16

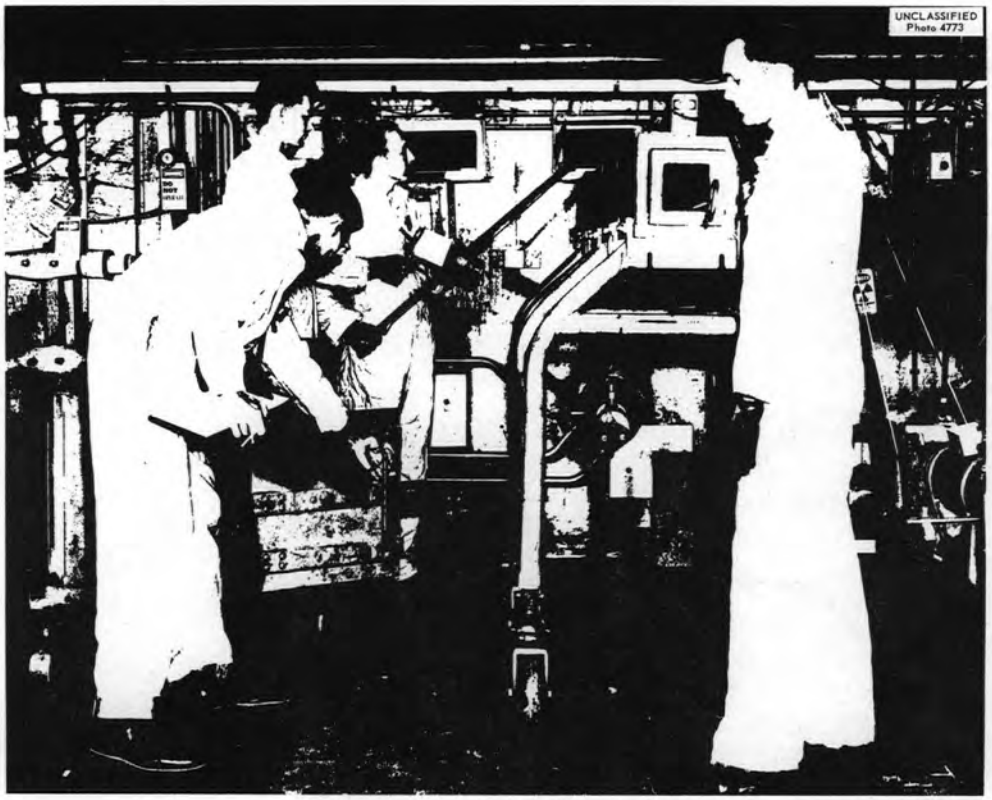

Fig. 17. Irradiated Elements Being Removed from Isotope-loading Face of the Reactor. (Line-cut technique)

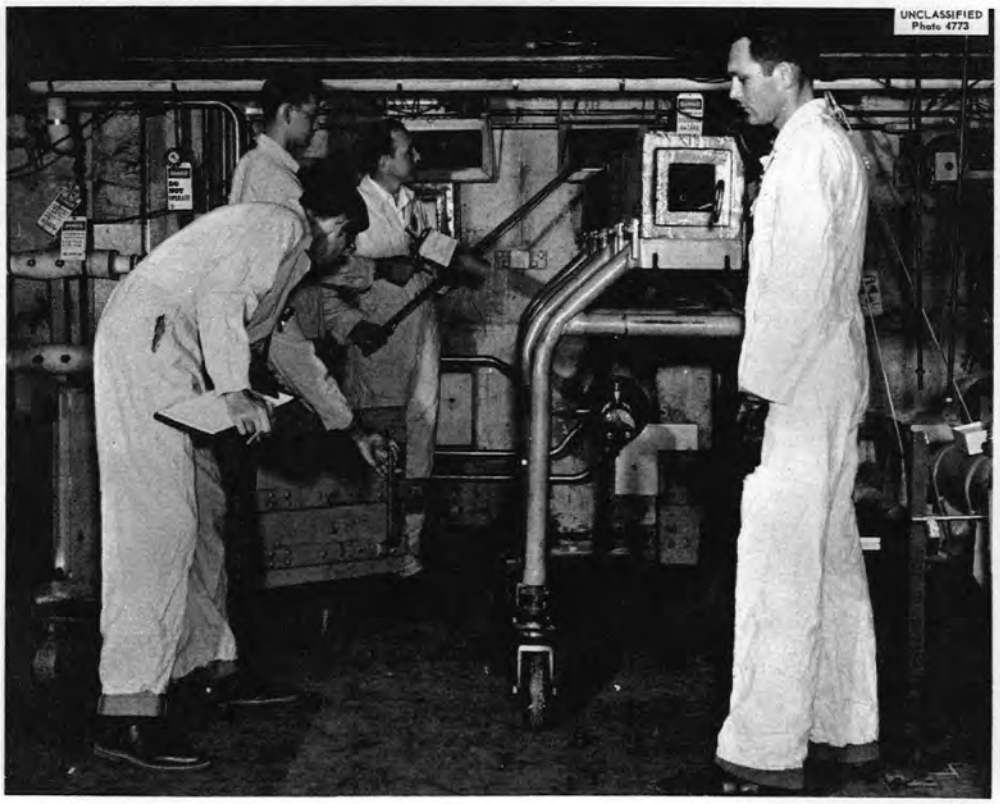

Fig. 18. Irradiated Elements Being Removed from Isotope-loading Face of the Reactor. (Halftone technique)

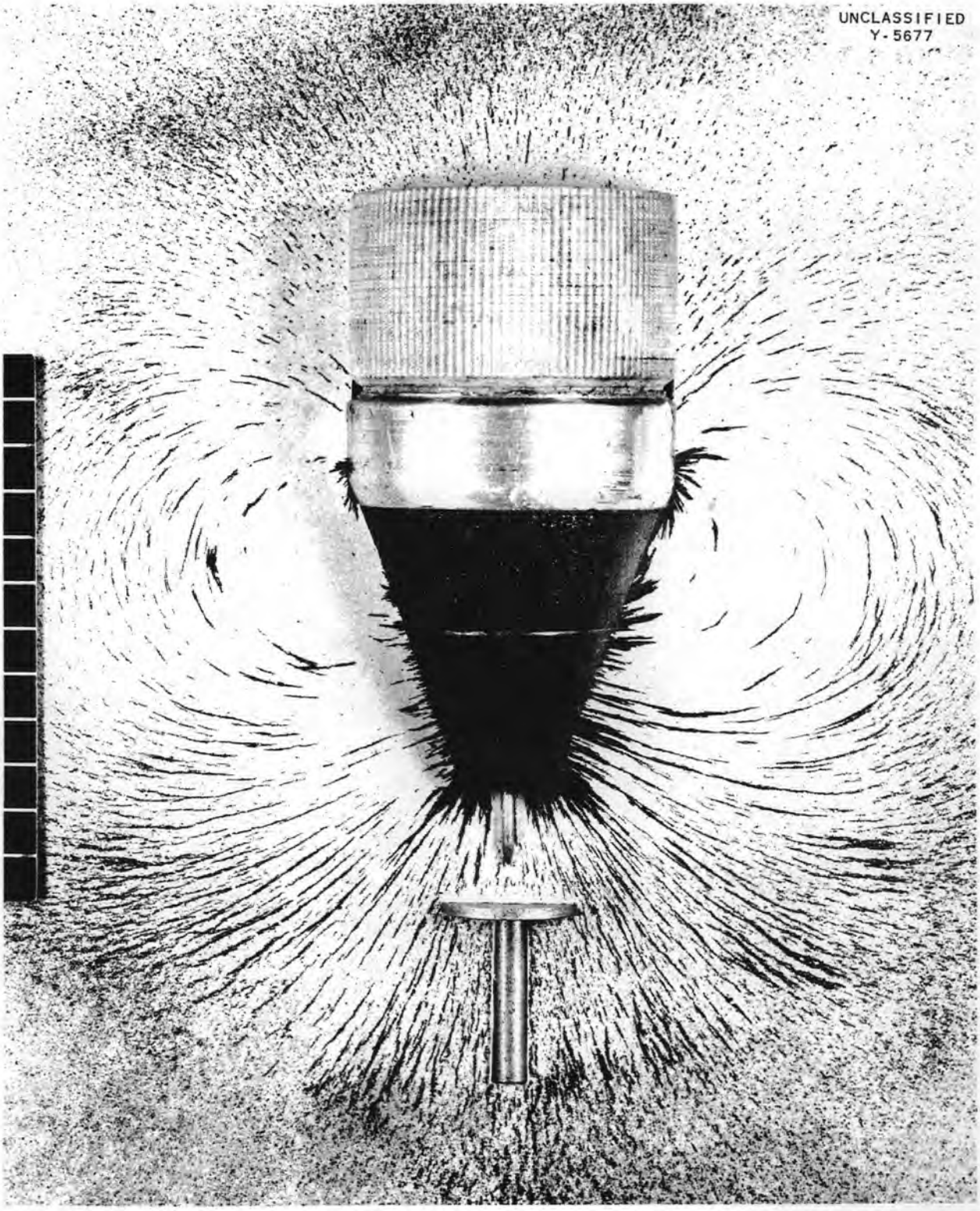

Fig. 19. Iron Filing Pattern of the Magnetic Lines of Flux of a Permanent Alnico Magnet.

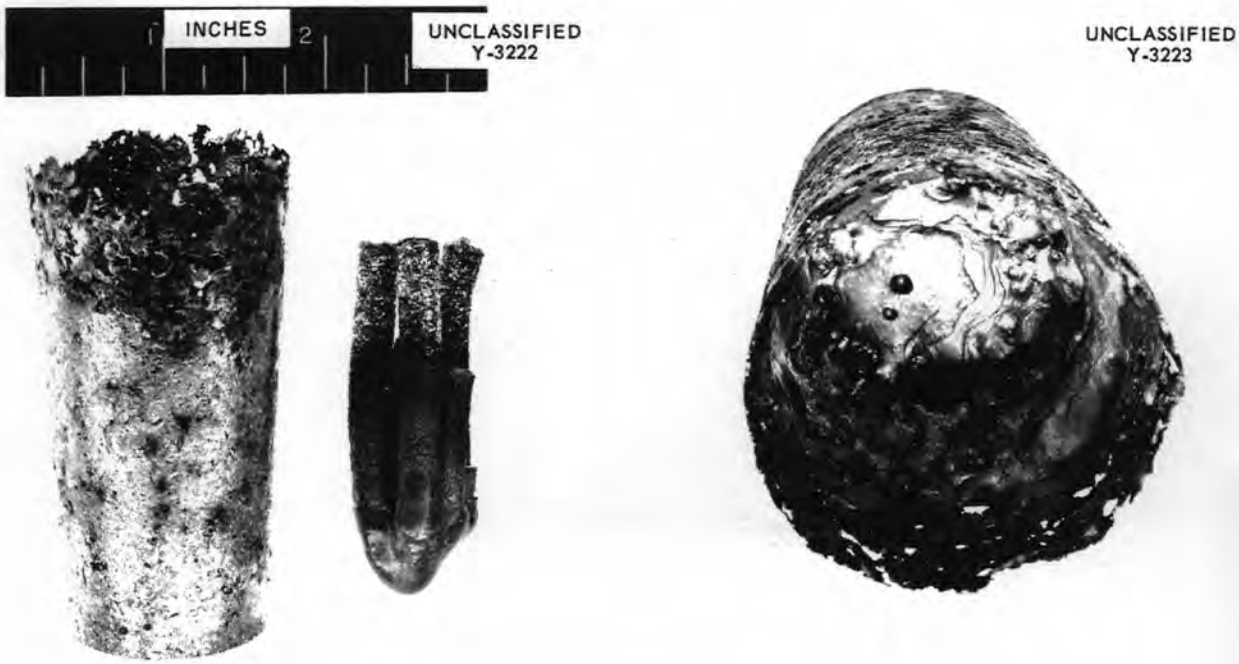

Fig. 20. Samples Melted in Vacuum Arc Furnace.

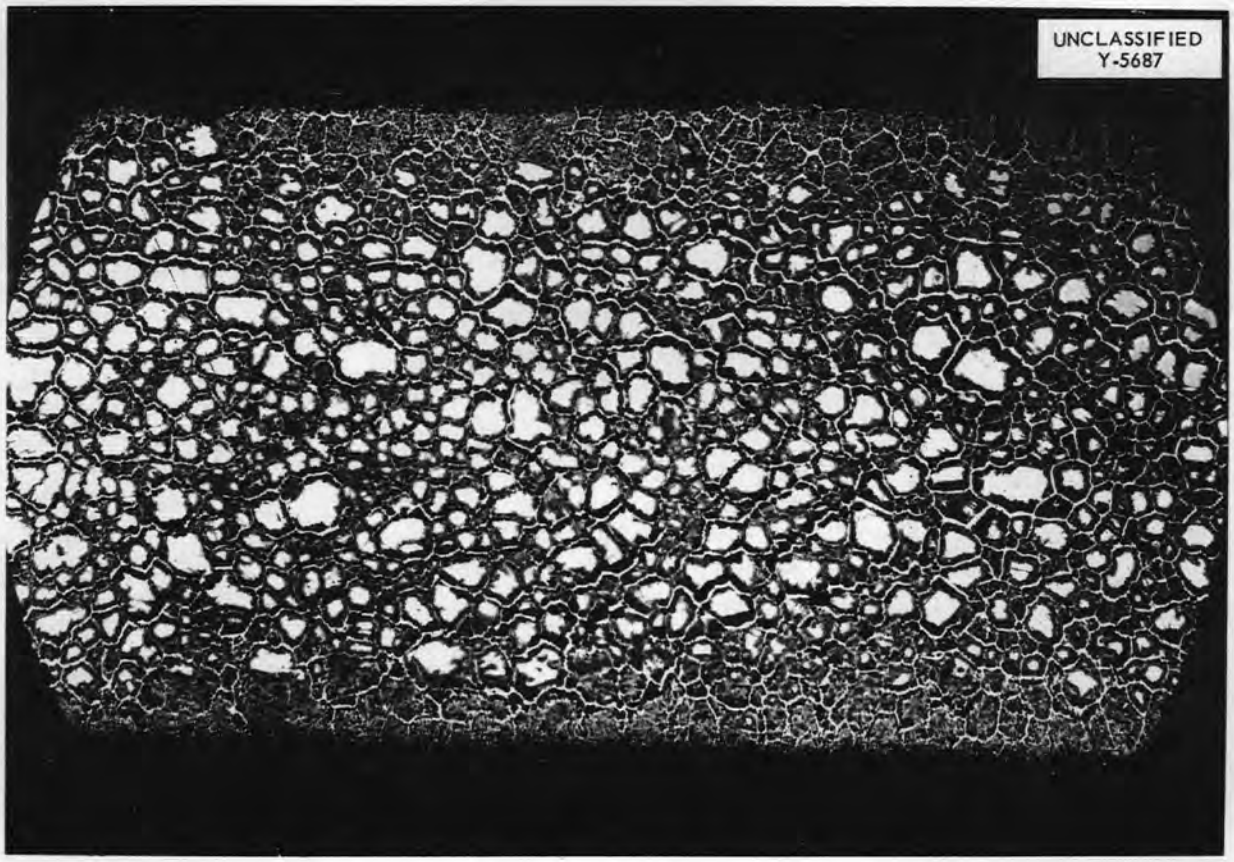

Fig. 21. Inconel Tested in Sodium Hydroxide for 100 hr at 816°C in Vacuum.

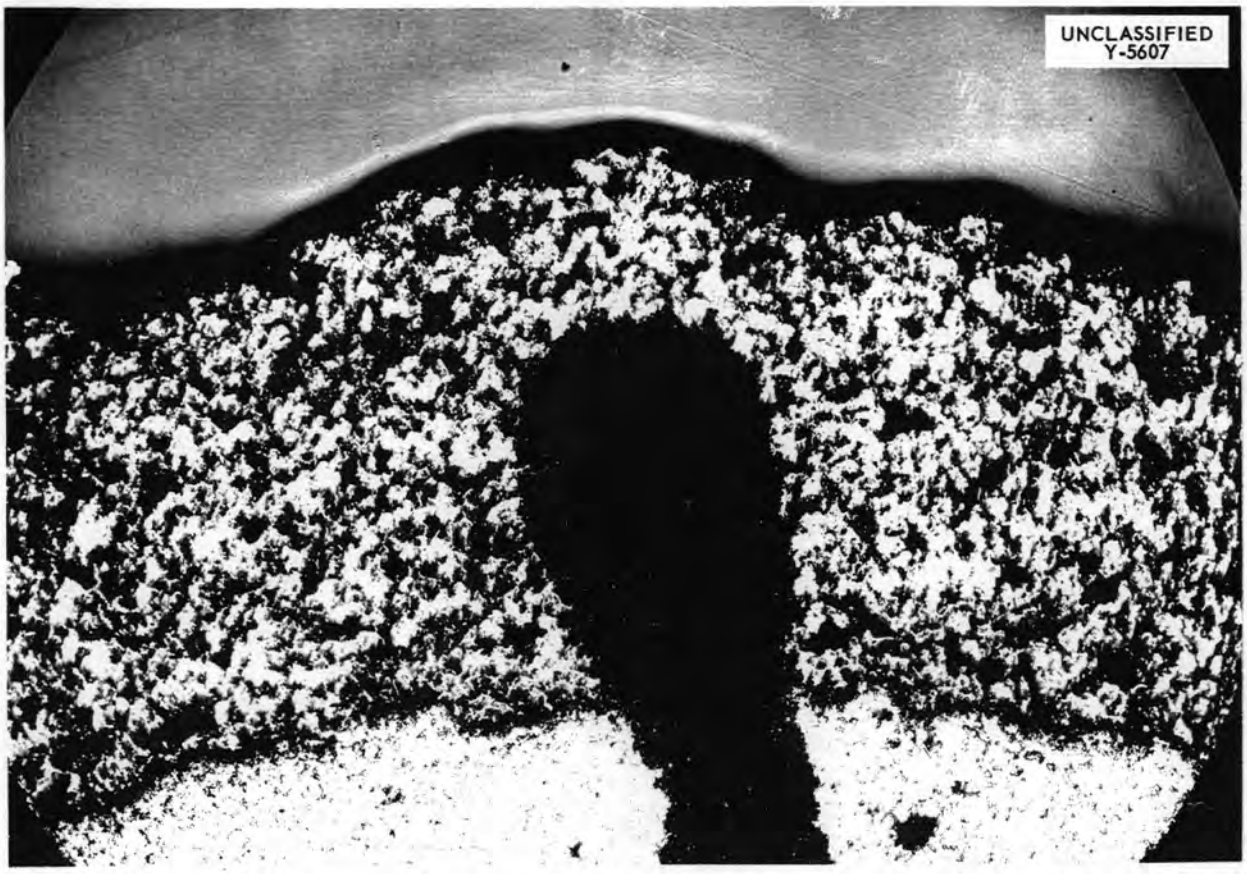

Fig. 22. As-Polished Nicrobrazed Slug After Corrosion Testing in Sodium Hydroxide for 100 hr at 1500°F.

Fig. 23. Metal Crystals Deposited on Comb-like Nickel Oxide Crystals in Cold End of Test SS-4a. 70x.

Fig. 24. Silver-Zirconium Alloy 0.77 at. % Silver, Annealed 12 Days at 802°C, Quenched from the Alpha Phase With a Small Amount of Eutectoid.

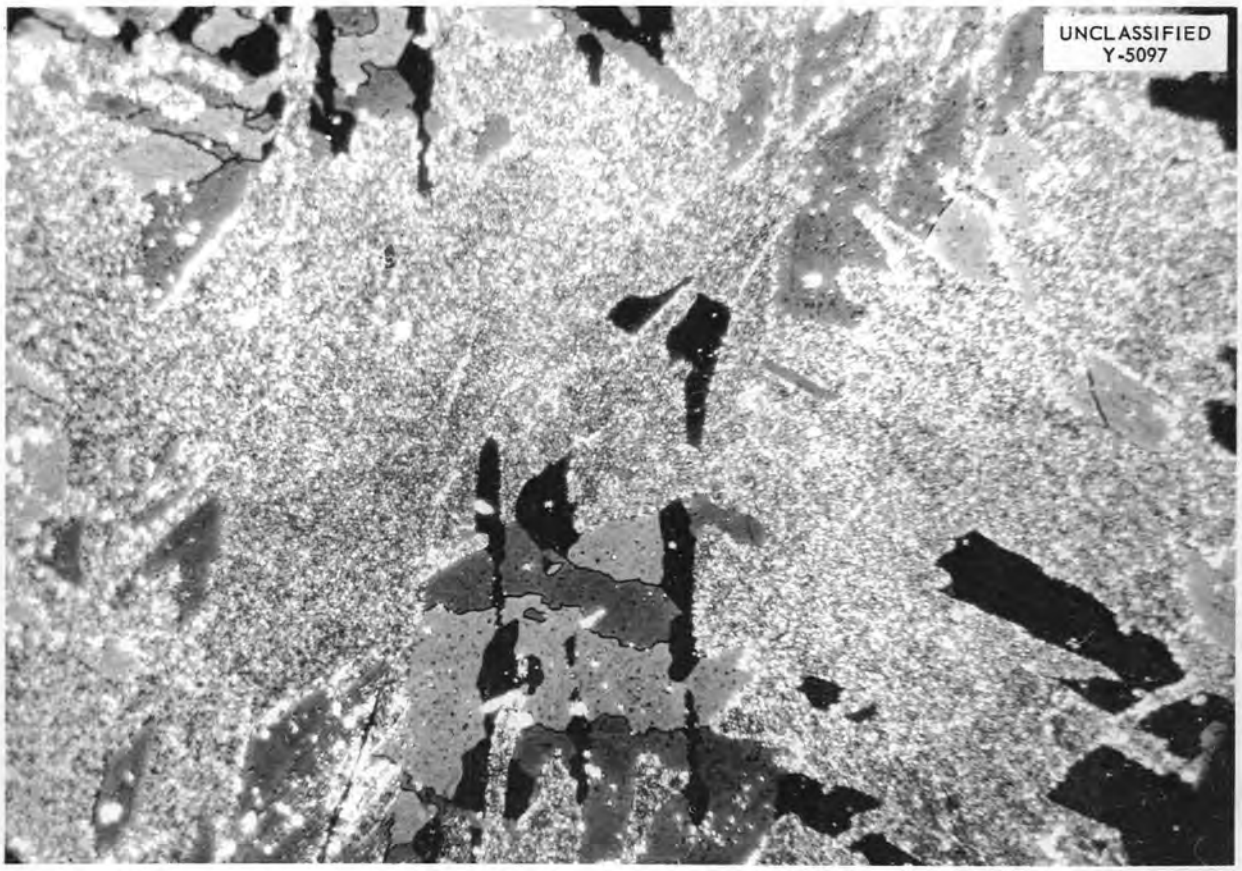

Fig. 25. Zirconium–Tungsten Alloy Heated at 900°C for 1 hr and Slowly Cooled.

Fig. 26. Microstructure of Alloy 21.4 in the As-Cast Condition Illustrating the Peritectic Formation of $AgZr_2$.

COMPOSITION

All major ORNL reports are composed on the Coxhead composing machines, commonly known as Vari-typer machines. These machines provide changeable type bars and variable spacing between characters or words. The variable spacing permits even right- and left-hand margins, hence, the work from these machines compares favorably with the best commercial composition.

Typical samples of body, bold face, and italic types in one size are illustrated in the following for the new model DSJ machine.

660-10-B

lower case

q w e r t y u i o p
a s d f g h j k l ,
z x c v b n m , . -

Figure

1 2 3 4 5 6 7 8 9 0
' fl $ % – & ' ( ) ½
fi ¼ ¾ ff ¢ * ? , . /

Caps

Q W E R T Y U I O P
A S D F G H J K L
Z X C V B N M , . !

670-10-B

lower case

q w e r t y u i o p
a s d f g h j k l ;
z x c v b n m , . -

Figure

1 2 3 4 5 6 7 8 9 0
' fl $ % – & ' ( ) ½
fi ¼ ¾ ff ¢ * ? , . /

Caps

Q W E R T Y U I O P
A S D F G H J K L ·
Z X C V B N M , . !

665-10-B

lower case

q w e r t y u i o p
a s d f g h j k l ,
z x c v b n m , -

Figure

1 2 3 4 5 6 7 8 9 0
' fl $ % – & ' ( ) ½
*fi ¼ ¾ ff ¢ * ? , (/*

Caps

Q W E R T Y U I O P
A S D F G H J K L
Z X C V B N M , !

Typical samples of similar types for the older model A-20 machine are

380-10

lower case

q w e r t y u i o p
a s d f g h j k l ,
z x c v b n m , -

Figure

1 2 3 4 5 6 7 8 9 0
' fl $ % – & ' ( ) ½
fi ¼ ¾ ff ¢ * ? , /

Caps

Q W E R T Y U I O P
A S D F G H J K L
Z X C V B N M , !

362-9

lower case

q w e r t y u i o p
a s d f g h j k l ,
z x c v b n m , . -

Figure

1	2	3	4	5	6	7	8	9	0
'	fl	$	%	–	&	'	(	)	½
fi	¼	¾	ff	¢	*	?	,	.	/

Caps

Q	W	E	R	T	Y	U	I	O	P
A	S	D	F	G	H	J	K	L	:
Z	X	C	V	B	N	M	,	.	'

385-10

lower case

q	w	e	r	t	y	u	i	o	p
a	s	d	f	g	h	j	k	l	,
z	x	c	v	b	n	m	,	.	-

Figure

1	2	3	4	5	6	7	8	9	0
'	fl	$	%	–	&	'	(	)	½
fi	¼	¾	ff	¢	*	?	,	.	/

Caps

Q	W	E	R	T	Y	U	I	O	P
A	S	D	F	G	H	J	K	L	
Z	X	C	V	B	N	M	,		'

Special mathematical and engineering or chemical formulas and symbols may be obtained by using the type shown below for the DSJ and A-20 models.

710-10-B

lower case

1	ℑ	/	°	}	–	×	*	≡	→
2	4	6	{	9	=	·	≈	·	'
3	5	7	8	0	+	ℜ		´	-

Figure

ξ	λ	∝	ρ	π	α	θ	∂	κ	σ
τ	⊂	δ	φ	β	ω	∫	ε	[	√
ζ	ψ	χ	γ	η	ν	μ	ι	]	⊃

Caps

Ξ	Λ	℘	P	Π	A	Θ	|	K	Σ
T	<	Δ	Φ	B	Ω	>	E	∞	.
Z	Ψ	X	Γ	H	N	M	(	)	,

264

lower case

±	ω	ε	ρ	τ	+	–	=	θ	π
α	σ	δ	φ	∞	η	→	κ	λ	
ζ	ξ	γ	ψ	β	ν	μ	∫	·	/

Figure

±	ω	ε	ρ	τ	+	–	=	θ	π
α	σ	δ	φ	∞	η	→	(	)	‴
ζ	ξ	γ	ψ	β	ν	μ	∫	≡	√

Caps

°	Ω	>	<	∴	\	⎫	¯	_	Π
'	Σ	Δ	∂	~	{	}	[	]	|
"	∇	Γ	∠	⎭	⎫	⎩	⎧	⎷	√

It is particularly important that all composition on these machines be centralized. Many unsuccessful and uneconomical operations have been attempted by people inexperienced with these machines, because the main problems with them are maintenance and training. Decentralization is a serious drawback to the efficient use of personnel and machines.

The authors of the various reports have a limited interest in composition, but it is most desirable that they know of the special letters and symbols available for mathematics, chemistry, physics, and other technical fields. Some samples of various equations in their final form are shown in the following

$$D \nabla^2 x^i + K x^i = s x^i - F ,$$

$$A \nabla^2 x^e = s x^e - G .$$

$$\epsilon = \left(1 - \frac{\overline{r^2 Q}}{\overline{r^2}\,\overline{Q}}\right) \frac{r_0^2}{10\, D_i}$$

$$k_{ij} = \delta^{-2} \int_{-a+(j-1)\delta}^{-a+j\delta} \int_{-a+(i-1)\delta}^{-a+i\delta} E_1(\sigma\,|y - x|)\,dx\,dy\ ,$$

$$F \sim F^0 + F_A^0(A - A_0) + F_g^0(g - g_0) + F_B^0(B - B_0) + F_d^0(d - d_0)$$

$$\equiv F^0 + F_A^0\alpha + F_g^0\gamma + F_B^0\beta + F_d^0\delta\ ,$$

$$\frac{T - T_0}{T_F - T_0} = 1 - \frac{8}{\pi} \sum_{p=0}^{\infty} \sum_{n=0}^{\infty} \frac{J_0(\beta_n r)\ \sin\left[\frac{(2p+1)}{L}\right] \pi z\ e^{-\{\beta_n^2 + (2p+1)^2\pi^2/L^2\}\,Kt}}{(2p+1)\,(\beta_n a)\ J_1(\beta_n a)}.$$

$$\alpha \sum F_A^{0\,2} + \gamma \sum F_A^0 F_g^0 + \beta \sum F_A^0 F_B^0 + \delta \sum F_A^0 F_d^0 = \sum F_A^0 F^0$$

$$\alpha F_A^0 F_g^0 + \gamma \sum F_g^{0\,2} + \beta \sum F_g^0 F_B^0 + \delta \sum F_g^0 F_d^0 = \sum F_g^0 F^0$$

$$\alpha F_A^0 F_B^0 + \gamma \sum F_g^0 F_B^0 + \beta \sum F_B^{0\,2} + \delta \sum F_B^0 F_d^0 = \sum F_B^0 F^0$$

$$\alpha F_A^0 F_d^0 + \gamma \sum F_g^0 F_d^0 + \beta \sum F_B^0 F_d^0 + \delta \sum F_d^{0\,2} = \sum F_d^0 F^0$$

$$G(\theta) = \int_0^{E_1} \sqrt{E(E+2)}\ (E+1)\ (E_0 - E)^2 \left[1 + n\,\frac{\sqrt{E(E+2)}}{E+1} \left\{\frac{\sqrt{E(E+2)}}{E_0 - E}\ \sin^2\theta\right.\right.$$

$$\left.\left. + \cos\theta \sqrt{1 - \frac{E(E+2)}{(E_0 - E)^2}\ \sin^2\theta}\right\}\right] \left[\frac{1 + \frac{E(E+2)\cos 2\theta}{(E_0 - E)^2}}{\sqrt{1 - \frac{E(E+2)}{(E_0 - E)^2}\ \sin^2\theta}} - 2\,\frac{\sqrt{E(E+2)}}{E_0 - E}\cos\theta\right] dE$$

$$E_1 = \frac{E_0^2}{2(E_0 + 1)} \qquad E_0 = 1.530$$

REPRODUCTION

Photo-Offset Process. The most important process available in reproduction is photo-offset. Photo-offset is a highly versatile process and may be used on any type of material, whether line cut or halftone. The following paragraphs briefly outline the various steps followed in producing the finished document from the master copy.

Negatives are made with a copy camera that is capable of reducing or enlarging copy within the required limits. The amount of reduction or enlargement any particular copy will stand is usually a function of the copy rather than a limitation of the camera. Halftones are produced with a 120-line screen, which is entirely satisfactory for general report work.

The finished negative is opaqued with Aquadag or similar solutions to remove all flaws or spots in the negative, as well as certain guide lines that are more easily removed at this point than during make-up. Illustrations or tables are stripped with appropriate copy at this point so that each page has its own finished negative.

The finished negative for each page is placed in a platemaking frame, over a sensitized plate, and exposed with strong arc light. Following application of chemical solutions, the plate is ready for use on the printing press. The plate most widely used is a plastic-surfaced, paper-backed sheet, although zinc plates and several other types are occasionally employed. The plastic plate is the most versatile, since it is more economical in first cost, chemical processing is simpler and shorter, and the quality of the printed product is very high.

The prepared plates are placed on Multilith machines and the appropriate number of copies are run off on a good-quality paper. Multilith machines are small offset printing presses.

A rotating collating table is available to speed assembly of large reports. After assembly, the reports are stapled and the binding taped, if necessary. In some instances, reports are stapled in the fold. This is a fast, convenient way to handle reports that are not over $\frac{3}{8}$ in. thick in the fold. For this procedure, an automatic folding machine is used that can fold as fast as a press can produce printed sheets.

Multilith Offset Process. The Multilith offset process uses a simple paper plate, typed with a special ribbon, to produce multiple copies at low cost. However, it is essential that the limitations of this process be strictly observed. It is entirely satisfactory for office memos, informal reports, and general office use, if only one run not exceeding 1000 copies is to be made.

The process is unsatisfactory for formal reports or for material that may have to be rerun. The limitation of 1000 good copies must be interpreted, since various authorities list figures that run up to 8000 copies. The 1000 figure is based on an average plate, stored under normally available conditions, and an average use factor. Ideally, Multilith plates and ribbons should be stored under controlled conditions at 50°F and 50% relative humidity. The wide deviations from these conditions, during summer and winter, reduce the number of good copies that can be produced. In a recent case, plates and ribbons were stored in a metal building where temperatures in the summer reached 100°F or higher and the relative humidity went up to 96%. These plates and ribbons were severely damaged, many to such an extent that no usable copies were obtained.

The appearance of the final product of the Multilith process can be appreciably improved by margination. Margination is accomplished by an extra patented attachment for the ordinary typewriter that is used in such a manner that the right hand margins are all even on any one page. The typing time for marginated copy is about 80% greater than that for unmarginated copy.

Ozalid Process. The old blueprint process is worthy of mention only because it is considered the forerunner of the Ozalid and Bruning processes. The blueprint process required preparation of original material in black ink on translucent paper. When such copy is placed in contact with the sensitized blueprint paper and exposed to strong light, chemical washing turns the print blue wherever the light hits it, all other areas remain white.

The Ozalid or Bruning processes are much the same as the blueprint process except that the prints are usually black-and-white and different chemicals are used. In addition to the black-and-white prints, brown-and-white, blue-and-white, red-and-white, and green-and-white prints can be made. The Laboratory is currently using blue-and-white prints. The colors are determined by the dye used in the various sensitized papers.

One of the best features of the Bruning and Ozalid prints is that they are developed dry, whereas the blueprint process requires wet developing. Obviously, considerable changes in paper size may result in the wet process and cause changes in possibly critical dimensions on certain drawings. Therefore, the Ozalid process or the Bruning

process should be used for large prints of mechanical and architectural drawings or for any print on translucent paper that is larger than 11 by 17 inches. These processes are not considered satisfactory for reports with wide distribution. However they are eminently satisfactory for preliminary reports with limited distribution.

These processes have additional advantages in that by varying the sensitized material, prints can be made on a variety of materials, such as white paper, transparent paper, clear film, frosted film, tracing cloth, and opaque cloth or film. It must be remembered that these processes make copies of the same size as the original, no enlargements or reductions are possible.

Photostat Process. The Photostat machine is essentially a copy camera designed to do a limited number of things more quickly and easily than a regular copy camera. It differs from the copy camera in that it uses photographic paper rather than film and employs a prism so that its copies will be readable rather than reversed. The process normally makes a paper negative (white copy on black background), although positive prints may be obtained by photographing the negative. In ordering copies, if a black print on a white background is desired, the order should show one Photostat negative and as many positive copies as required.

Photostat work features speed and should be used for a limited number of copies. The Photostat process is not satisfactory for reports because it cannot compete with the photo-offset process on large-quantity copying. Also, it is difficult in this process to obtain completely white backgrounds on the positive copies. In the Photostat process, in contrast to the Ozalid process, it is possible to enlarge or reduce the copy. Prints up to 17 by 24 in. can be made, and copy can be enlarged twice or reduced one-half in one step. Additional steps are required for enlargement or reduction beyond those ratios.