MARTIN MARIETTA ENERGY SYSTEMS LIBRARIES
3 4456 0360741 6

CENTRAL RESEARCH LIBRARY
DOCUMENT COLLECTION

Cy-2
C. R. Library

UNITED STATES ATOMIC ENERGY COMMISSION

ORNL-1840

CALCULATIONS OF SHIELDING FOR BURNED-OUT REACTOR FUEL ELEMENTS

By
H. E. Stern

December 22, 1953

Oak Ridge National Laboratory
Oak Ridge, Tennessee

Technical Information Service, Oak Ridge, Tennessee

CENTRAL RESEARCH LIBRARY
DOCUMENT COLLECTION

LIBRARY LOAN COPY

DO NOT TRANSFER TO ANOTHER PERSON

If you wish someone else to see this document, send in name with document and the library will arrange a loan.

Subject Category, PHYSICS.
Operated by Carbide and Carbon Chemicals Company for the U. S. Atomic Energy Commission under Contract No. W-7405-eng-26.
Other issues of this report may bear the number CF-53-12-111.
Date Declassified: January 3, 1955.

Issuance of this document does not constitute authority for declassification of classified material of the same or similar content and title by the same author.
This report has been reproduced with minimum alteration directly from manuscript provided the Technical Information Service in an effort to expedite availability of the information contained herein.
Reproduction of this information is encouraged by the United States Atomic Energy Commission. Arrangements for your republication of this document in whole or in part should be made with the author and the organization he represents.
Printed in USA, Price 25 cents. Available from the Office of Technical Services, Department of Commerce, Washington 25, D. C.

CALCULATIONS OF SHIELDING FOR BURNED-OUT REACTOR FUEL ELEMENTS

By H. E. Stern

Introduction

A current project at ORNL is a design study for a remote-site nuclear power plant. One of the problems associated with this study is the handling of burned-out fuel elements. Calculations of the shielding required for these elements have been performed quite adequately to date by the design group itself,* and this memorandum presents a somewhat independent cursory study of the problem, including some sample calculations and suggested possible modifications.

Assumptions

For the purpose of this paper, the following assumptions have been made concerning the reactor:

(a)	Operating power	10 megawatts
(b)	Number of fuel elements	48
(c)	Life of elements	5 yr
(d)	Allowable cooling time after shutdown	1 yr

In general, the assumptions made here and at various other points throughout the discussion are meant to be typical, conservative, and fairly realistic, although not definitive. The methods of calculation can for the most part be modified to account for different assumptions.

* This memo is in substantial agreement with ideas expressed by A. M. Perry, ORNL, in a private conversation.

MARTIN MARIETTA ENERGY SYSTEMS LIBRARIES

3 4456 0360741 6

Discussion

For the operation and cooling times encountered here, the after-shutdown gamma radiation intensity will be controlled by the mass 144 fission product decay chain:

$$\text{1-sec Xe} \longrightarrow \text{(short) Cs} \longrightarrow \text{(short) Ba} \longrightarrow \text{(short) La} \longrightarrow \text{275-day Ce} \longrightarrow \text{17.5-min Pr} \longrightarrow \text{stable Nd}^{(1)}$$

The fission yield for this chain is 0.053.* Of these 0.02 decay with a 2.60-Mev gamma ray and 0.02 decay with a 2.20-Mev gamma ray.(2) Other disintegrations are of lower energies and can be neglected.

The 17.5-min Pr is in equilibrium with the 275-day Ce, and the radiation dosage rate is hence controlled by the latter. The effective time constant is given by

$$\lambda = \frac{(0.693)(365)}{275} = 0.920\ (\text{yr})^{-1}$$

The average number of disintegrations/sec element (for each energy photon) is

$$\text{Avg. } p_o(E) = \frac{f_w P}{N}\left[1 - e^{-5\lambda}\right] e^{-1\lambda}\ ng$$

(1) John Noteff, Fission Product Decay Gamma Energy Spectrum, APEX 134, p. 25 (n.d.).
(2) Ibid., p. 13.
* This value is normalized so that the total integrated yield is 2 nuclides/fission.

where

f_w = conversion factor (fission/sec-watt),

P = steady operating power (watts),

N = number of reactor fuel elements,

η = fission yield (dimensionless),

g = fraction of disintegrations giving off a gamma of energy E.

Substituting,

$$\text{Avg. } p_o(2.6 \text{ Mev}) = \text{Avg. } p_o(2.2 \text{ Mev}) = \frac{(3.25 \times 10^{10})(10^7)}{48}$$

$$\times (0.99)(0.399)(0.053)(0.02)$$

$$= 2.84 \times 10^{12} \text{ disintegrations/sec/element}$$

Let

p_o = activity of element (disintegrations/sec),

μ_i = absorption coefficient (cm^{-1}),

L = length of element (in.),

r = thickness of lead around fuel element,

and assume

(a) no self-absorption,

(b) a line source of radiation,

(c) a cosine distribution of activity along the fuel element,

(d) an exponential attenuation including buildup.

The current at the surface of a cylinder of lead (point A in Fig. 1) is

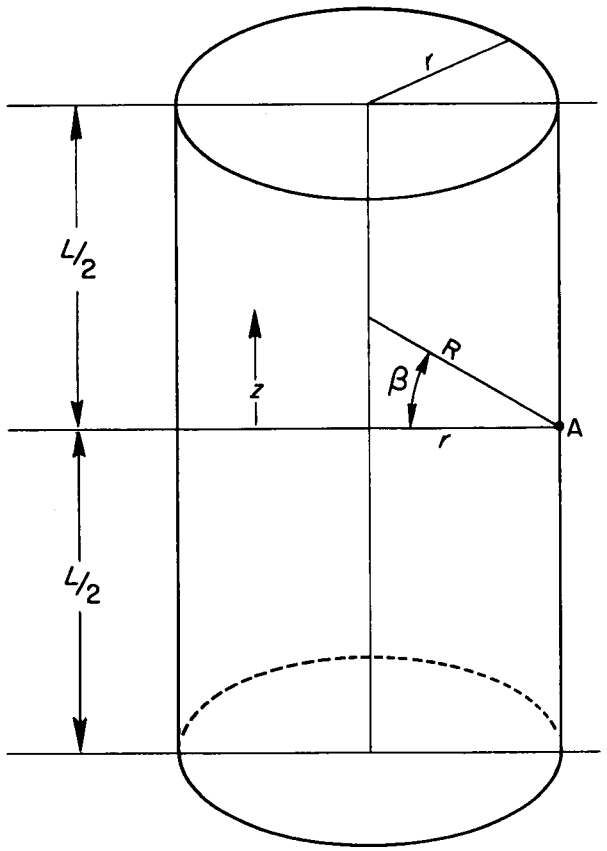

Fig. 1. Illustration of Nomenclature Used in Calculations of Shield Around Fuel Element.

$$F_i = 2 \int_{z=0}^{L/2} \frac{p_o}{L} \cdot \frac{\pi}{2} \cos \frac{\pi z}{L} \, dz \, \frac{e^{-\mu_i R}}{4\pi R^2} \cos\beta$$

$$= \frac{p_o r}{4L} \int_{z=0}^{L/2} \cos \frac{\pi z}{L} \frac{e^{-\mu_i R}}{R^3} \, dz$$

$$= \frac{p_o r}{4L} \int_{z=0}^{L/2} \cos \frac{\pi z}{L} \frac{e^{-\mu_i (r^2+z^2)^{1/2}}}{(r^2 + z^2)^{3/2}} \, dz$$

where z and R are the distances shown in Fig. 1.

Let $y = z/r$; then

$$F_i = \frac{p_o r}{4L} \int_{y=0}^{L/2r} \cos\left(\frac{\pi r}{L} y\right) \frac{e^{-\mu_i r (1+y^2)^{1/2}}}{r^3 (1 + y^2)^{3/2}} \, r dy$$

$$= \frac{p_o}{4Lr} \int_{y=0}^{L/2r} \cos\left(\frac{\pi r}{L} y\right) \frac{e^{-\mu_i r (1+y^2)^{1/2}}}{(1 + y^2)^{3/2}} \, dy$$

The absorption coefficients (μ_i) for the two energies are determined[3] by

$$\frac{\mu}{\rho} (2.6 \text{ Mev}) = .0417 \text{ cm}^2/\text{g}$$

$$\frac{\mu}{\rho} (2.2 \text{ Mev}) = .0434 \text{ cm}^2/\text{g}$$

The buildup effects can be approximated from data previously reported[4] If the point source buildup factors given in this report are represented in a semi-log plot (see Fig. 2) the curves can be extrapolated and fitted

(3) W. S. Snyder and J. L. Powell, "Absorption of γ-Rays," ORNL-421 Supplement 1 (March 14, 1950).

(4) H. Goldstein, J. E. Wilkins, Jr., L. V. Spencer, "Notice of Systematic Calculations of Gamma Ray Penetration," NDA Memo 15C-2 (Feb. 10, 1953).

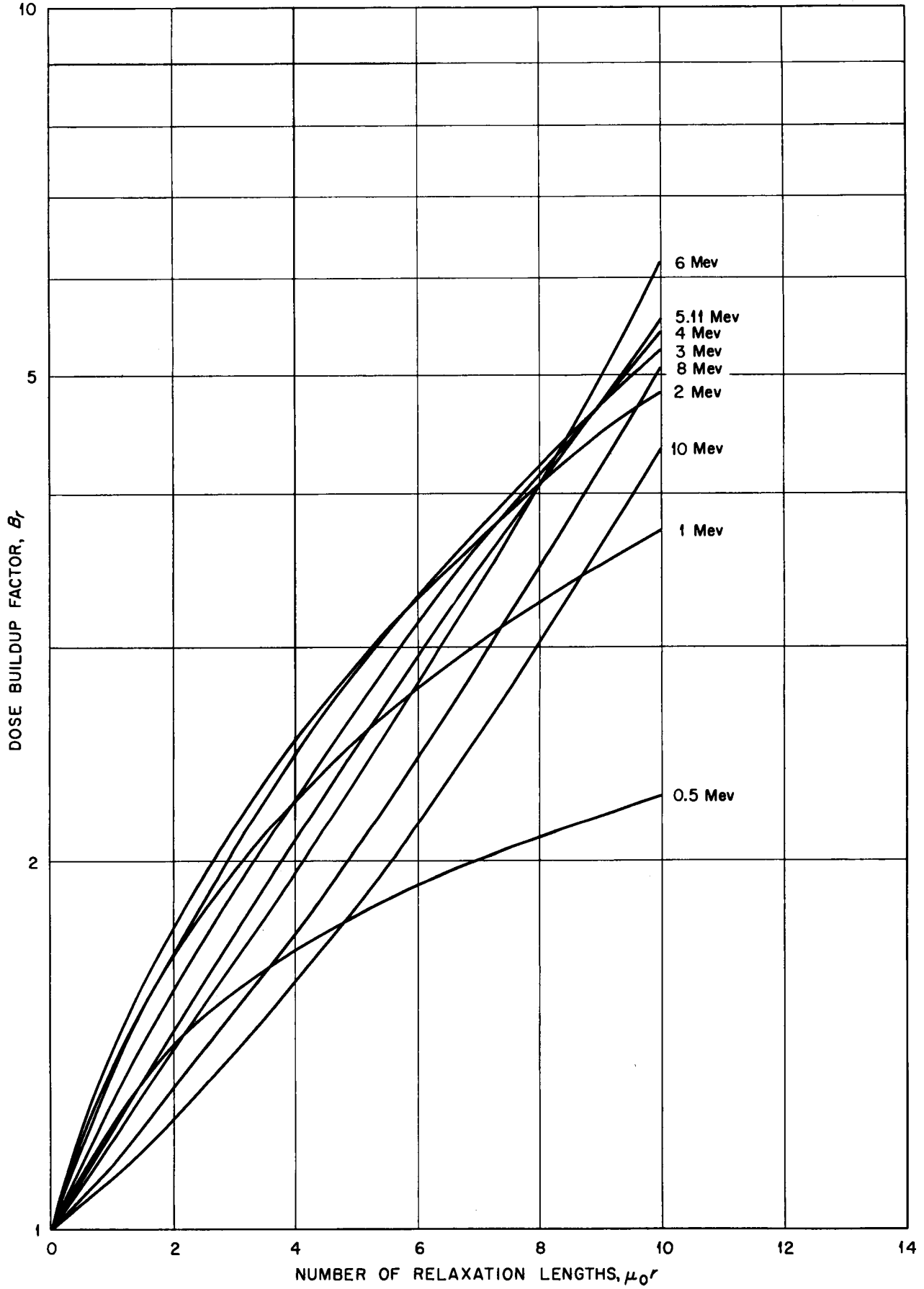

Fig. 2. Dose Buildup Factor as a Function of the Number of Relaxation Lengths for Lead (Ref. NDA MEMO 15C-2).

reasonably well by straight lines in the region of 7 to 10 relaxation lengths. From these straight lines the following expressions for the buildups can be obtained:

$$B(2.6)\text{Mev}) = 1.93\ e^{0.0964\ \mu r}$$

$$B(2.2\ \text{Mev}) = 2.13\ e^{0.0832\ \mu r}$$

Hence material dose attenuations are given by:

$$A_{Pb}(2.6\ \text{Mev}) = 1.93\ e^{-0.904\ \mu r} = 1.93\ e^{-0.415r}$$

$$A_{Pb}(2.2\ \text{Mev}) = 2.13\ e^{-0.917\ \mu r} = 2.13\ e^{-0.437r}$$

With these modified attenuations the following expressions were set up for the currents in photons/cm^2·sec.

For E = 2.6 Mev,

$$F_1 = F(25\ \text{cm}) = \frac{1.93\ p_o}{4L(25)} \int_{y=0}^{1.118} \cos(1.407y)\ \frac{e^{-10.38(1+y^2)^{1/2}}}{(1+y^2)^{3/2}}\ dy$$

$$F_2 = F(30\ \text{cm}) = \frac{1.93\ p_o}{4L\ (30)} \int_{y=0}^{0.931} \cos(1.687y)\ \frac{e^{-12.45(1+y^2)^{1/2}}}{(1+y^2)^{3/2}}\ dy$$

$$F_3 = F(35\ \text{cm}) = \frac{1.93\ p_o}{4L(35)} \int_{y=0}^{0.798} \cos(1.967y)\ \frac{e^{-14.52(1+y^2)^{1/2}}}{(1+y^2)^{3/2}}\ dy$$

For E = 2.2 Mev,

$$F_4 = F(25\ \text{cm}) = \frac{2.13\ p_o}{4L(25)} \int_{y=0}^{1.118} \cos(1.407y)\ \frac{e^{-10.92(1+y^2)^{1/2}}}{(1+y^2)^{3/2}}\ dy$$

$$F_5 = F(30\ \text{cm}) = \frac{2.13\ p_o}{4L(30)} \int_{y=0}^{0.931} \cos(1.687y)\ \frac{e^{-13.11(1+y^2)^{1/2}}}{(1+y^2)^{3/2}}\ dy$$

$$F_6 = F(35\ \text{cm}) = \frac{2.13\ p_o}{4L(35)} \int_{y=0}^{0.798} \cos(1.967y)\ \frac{e^{-15.30(1+y^2)^{1/2}}}{(1+y^2)^{3/2}}\ dy$$

The integrals were evaluated and F_i/p_o was computed. The dose at each thickness was computed from

$$\frac{D(r)}{p_o} = \frac{1}{p_o}\left[\frac{F(E_1,r)}{\gamma(E_1)} + \frac{F(E_2,r)}{\gamma(E_2)}\right]$$

where γ is the conversion factor $\left(\frac{\text{No.}/\text{cm}^2/\text{sec}}{\text{r/hr/watt}}\right)$. The results are plotted in Fig. 3.

These results agree within a factor of about 2 with dose calculations under the conservative assumption that all the activity is concentrated at the center of the element.

If it is now assumed that there is a cosine distribution of power across the reactor and that the shield is designed for laboratory tolerance* at the surface, then, for an element of maximum activity, the gamma dose per unit source strength will have to be

$$\frac{D}{(\text{max } P_o)} = \frac{P}{\left[\frac{\pi}{2}\ (\text{avg. } P_o)\right]} = \frac{7.5 \times 10^{-3}}{\left(\frac{\pi}{2}\right)(2.84 \times 10^{12})} = 1.68 \times 10^{-15}\ \frac{\text{r/hr}}{\text{disinteg/sec}}$$

corresponding to a lead thickness of 30.3 cm (12.0 in.) for a single element.

One suggested configuration is the shielding of four elements in a single box. By selectively grouping the elements it should presumably be possible to obtain 12 sets, each with an effective p_o of approximately 4 avg. p_o. If no self-shielding is assumed, and one again designs for laboratory tolerance,

---

* 7.5 mr/hr.

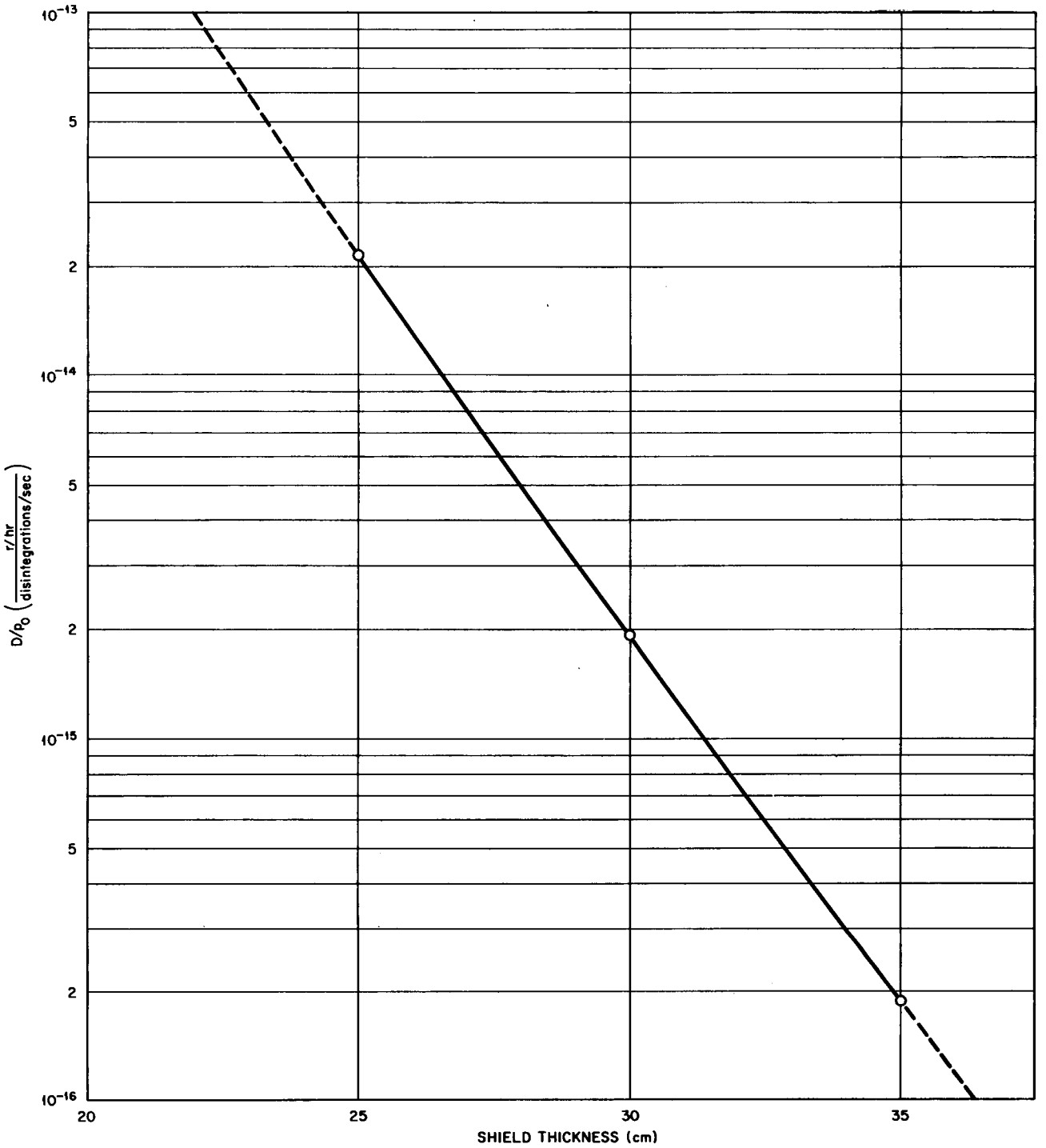

Fig. 3. Gamma Dose per Unit Source Strength as a Function of Thickness of Shield.

$$\frac{D}{P_o} = \frac{7.5 \times 10^{-3}}{(4)(2.84 \times 10^{12})} = 8.4 \times 10^{-16} \frac{\text{r/hr}}{\text{disintegrations/sec}}$$

Corresponding to a thickness of 31.8 cm (2.5 in.) .

Calculation of Shield Weight

The above shield thicknesses were calculated assuming a line source with no self-absorption. It is conservative, therefore, to consider shields where the minimum distance from any point on the shield to a point on the surface of the element is equal to the calculated thickness. If one assumes that the elements to be shielded are in the shape of a rectangular box, of square cross section w x w and length L, the volume of the shield can be divided into five parts (see Fig. 4) and determined as follows:

I. 4 quarter cylinders of height L and radius t

$$V_1 = 4 \cdot \frac{1}{4} \pi t^2 L = \pi t^2 L$$

II. 8 octants of radius t

$$V_2 = 8 \cdot \frac{1}{8} \cdot \frac{4}{3} \pi t^3 = \frac{4}{3} \pi t^3$$

III. 8 quarter-discs of radius t and thickness w

$$V_3 = 8 \cdot \frac{1}{4} \pi t^2 w = 2\pi t^2 w$$

IV. 2 rectangular plugs of square cross section w and length t

$$V_4 = 2w^2 t$$

V. 4 rectangular slabs L x w x t

$$V_5 = 4wLt$$

The total volume of the shield is

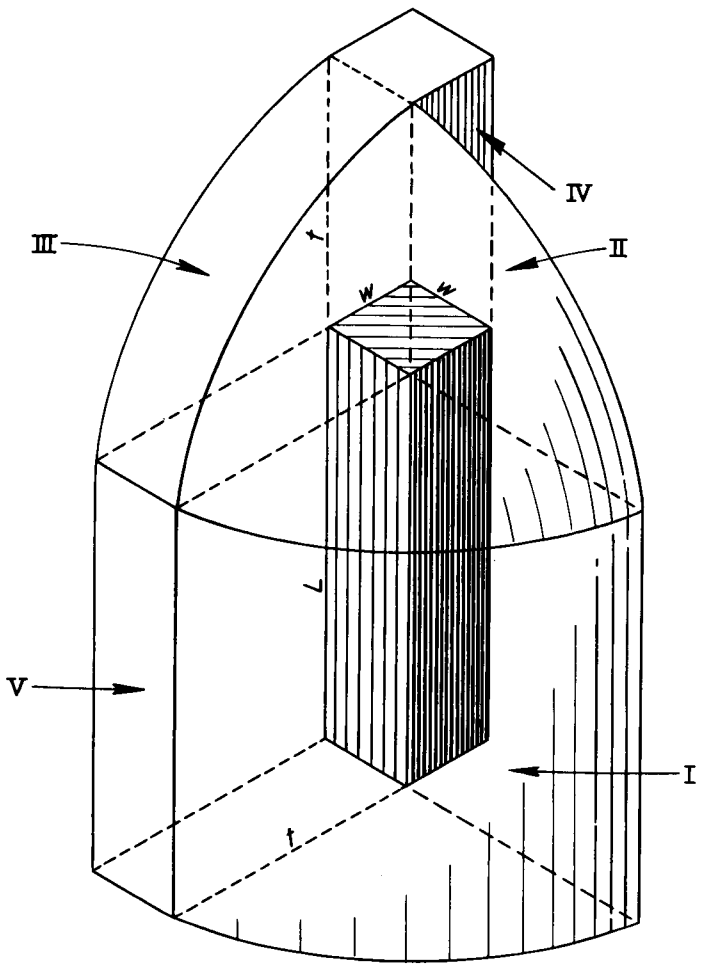

Fig. 4. Diagram Showing Various Sections of Lead Shield Around Fuel Element.

$$V = \sum_{i=1}^{5} V_i$$

$$= \pi t^2 L + \frac{4}{3}\pi t^3 + 2\pi t^2 w + 2w^2 t + 4wLt$$

$$= \left[\frac{4}{3}\pi\right] t^3 + \pi\left[L + 2w\right] t^2 + 2w\left[w + 2L\right] t$$

If the elements are 2 1/2 x 2 1/2 x 22 in. and four elements are shielding together, then

$$w = (2)(2\ 1/2)(2.54) = 12.7 \text{ cm}$$

$$L = (22)(2.54) = 55.9 \text{ cm}$$

$t = 31.8$ cm for the example considered.

Therefore,

$$V = 4.19t^3 + 255t^2 + 3160t$$

$$= (4.19)(31.8)^3 + (255)(31.8)^2 + (3160)(31.8)$$

$$= 4.94 \times 10^5 \text{ cm}^3$$

and the shield weight is

$$W = \frac{(11.0)(4.94 \times 10^5)}{454} = 12{,}000 \text{ lb}$$

This calculation and other weight calculations throughout assume no clearance between elements and shield, no structural weight, and a density of lead of 11.0. The weight of the elements themselves is also excluded. Figure 5 gives a plot of D/p_o vs. lead shield weight for this configuration. Figure 6 is a plot of shield weight vs. thickness.

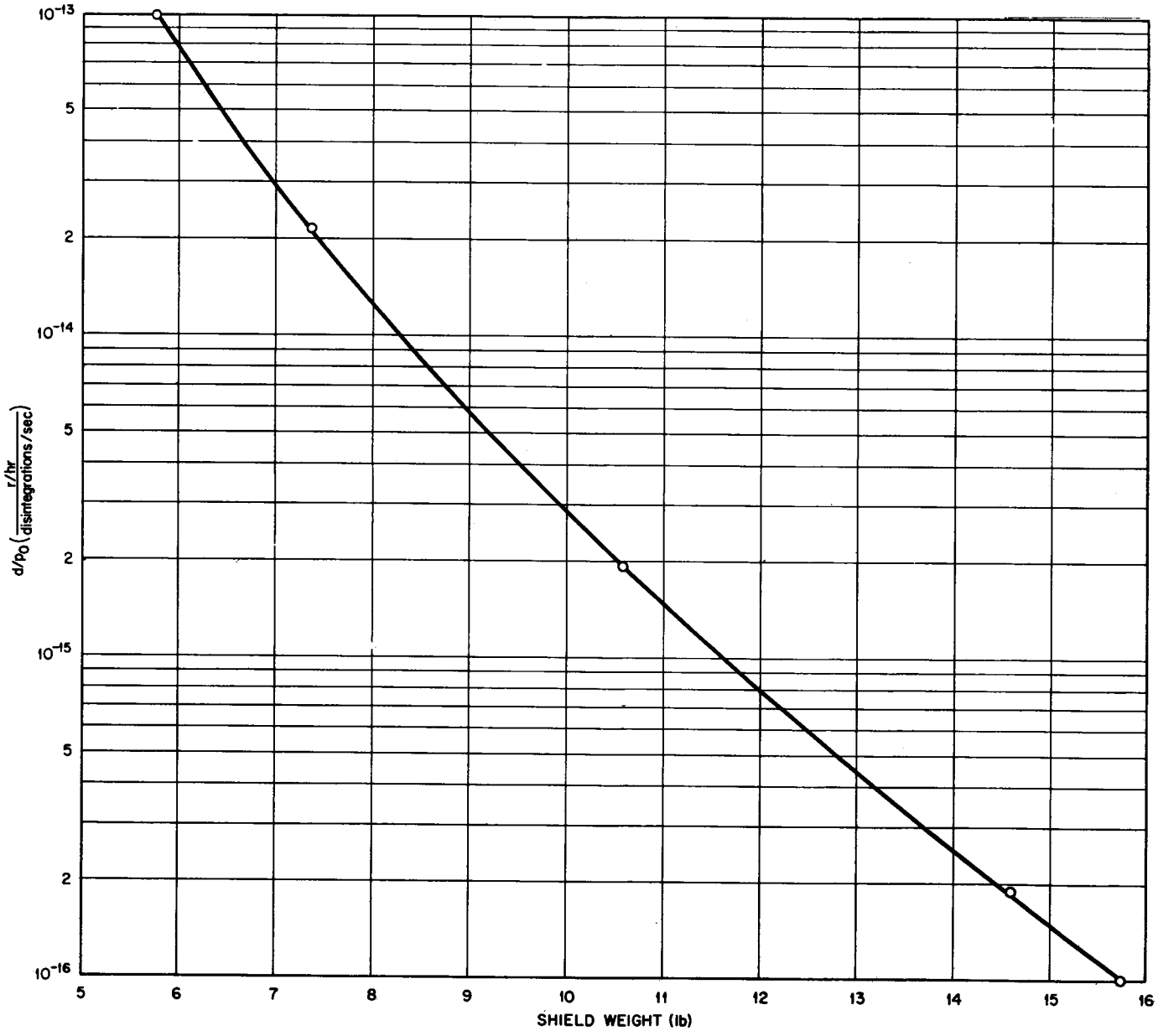

Fig. 5. Weight of Lead Shield for Fuel Element as a Function of Activity of the Element.

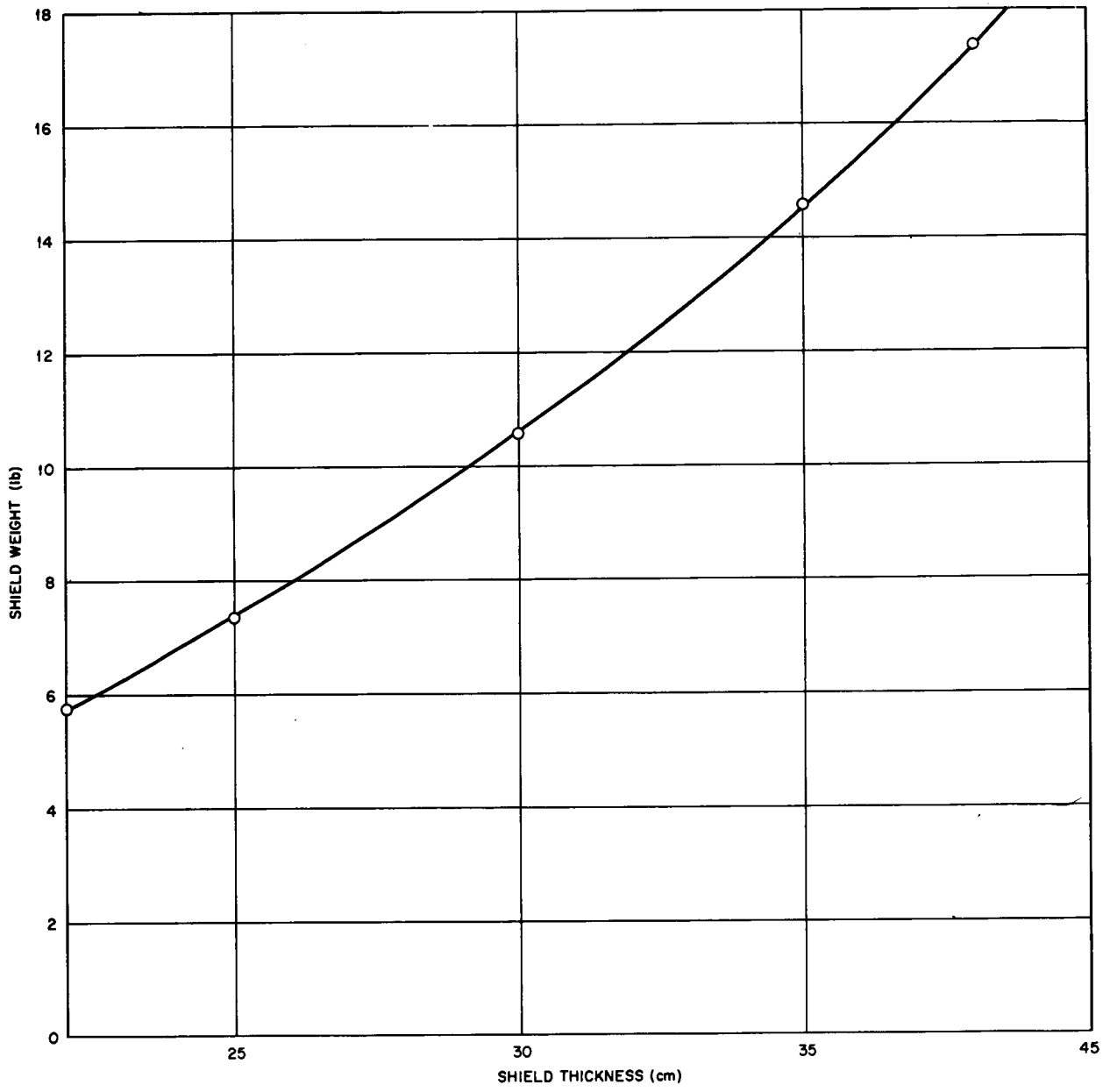

Fig. 6. Weight of Lead Shield for Fuel Element as a Function of Thickness of Shield.

Additional Considerations

Substitution of Uranium for Lead. For a rough estimate of the effect of substituting uranium for lead, the following assumptions were made:

(a) Comparison of uranium and lead thicknesses can be made on the basis of shielding a point source (2.6 Mev),

(b) Buildup factors for uranium and lead are the same.

The uranium mass absorption coefficient is 0.0438 cm^2/g.[5] Using this value,

$$\text{Effective } \mu_U(2.6 \text{ Mev}) = (18.7)(.0438)(0.904) = 0.740 \text{ cm}^{-1}$$

Consider the shielding of a point source of 2.6-Mev gammas, e.g. 31.8 cm of lead:

$$\text{Attenuation} \sim \frac{e^{-(0.415)(31.8)}}{(31.8)^2} = \frac{e^{-13.20}}{(31.8)^2} = 1.83 \times 10^{-9}$$

Hence, the equivalent uranium thickness given by the equation, is

$$1.83 \times 10^{-9} = \frac{e^{-0.740 t_{eq}}}{(t_{eq})^2}$$

$$t_{eq} = 19.2 \text{ cm}$$

The corresponding volume and weight of the shield are:

$$V_U = (4.19)(19.2)^3 + (255)(19.2)^2 + (3160)(19.2)$$

$$= 1.83 \times 10^5 \text{ cm}^3$$

$$W_U = \frac{(1.83 \times 10^5)(18.7)}{454} = 7500 \text{ lb}$$

Thus, the actual weight saved is

$$12{,}000 - 7{,}500 = 4{,}500 \text{ lb},$$

the fractional weight saving being

$$\frac{4{,}500}{12{,}000} = 0.38$$

---

(5) M. K. Hullings, "Gamma-ray Total Mass Absorption Coefficients," CF-53-2-266 (Feb. 12, 1953).

Use of Mercury in Elements to Increase Self-Absorption. To determine the effect of adding mercury in the fuel elements, assume

(a) Photons of 2.6 Mev,

(b) Number of photons escaping is equal to the number produced in the outer 1/3 relaxation length. (approximate leakage from semi-infinite slab).

Then

$$\text{Effective } \mu_{Hg}{}^{(5)} = (13.6)(0.0427) = 0.581 \text{ cm}^{-1}, \ \lambda = 1.72 \text{ cm}$$

and the fraction of photons escaping is

$$F_p = 1 - \frac{\left[12.7 - \left(\frac{2}{3}\right)(1.72)\right]^2 \left[55.9 - \left(\frac{2}{3}\right)(1.72)\right]}{(12.7)^2 \ (55.9)}$$

$$= 1 - 0.818 \approx 0.182$$

The weight of the mercury is

$$W_{Hg} < \frac{(8.66 \times 10^3)(13.6)}{454} = 2.59 \times 10^2 \text{ lb}$$

and the dose corresponding to the new shield thickness is

$$D/p_o = \frac{8.4 \times 10^{-16}}{0.182} = 46.2 \times 10^{-16}$$

where the thickness of the lead is 28.1 cm and the weight is 9300 lb. The corresponding weight of the shield is

$$W_{Pb} = 9300 + 260 = 9560 \text{ lb}$$

where the weight saved is

$$12{,}000 - 9{,}560 = 2{,}440 \text{ lb},$$

the fractional saving being

$$\frac{2{,}440}{12{,}000} = 0.20$$

Cutting Element into Different Shapes. If the elements could be cut and placed in a more nearly optimum geometry, a weight saving would result. For the sake of comparison, consider the four elements in the shape of a cube of equal volume. Then

$$w = L = \sqrt[3]{(12.7)^2\ (55.9)} = 20.8 \text{ cm}$$

If the same thickness t of lead is employed, the shield volume and weight are

$$V = (4.19)(31.8)^3 + (3.14)(3)(20.8)(31.8)^2 + 2(20.8)(3)(20.8)(31.8)$$
$$= 3.61 \times 10^5$$
$$W = \frac{(3.61 \times 10^5)(11.0)}{454} = 8750 \text{ lb}$$

The weight saving is

$$12{,}000 - 8{,}750 = 3{,}250,$$

the fractional weight saving being

$$\frac{3{,}250}{12{,}000} = 0.27.$$

Crushing Element. It might be possible to crush the elements, eliminating all voids. Assume a ratio of the material volume to the total volume of 0.6. Then four crushed elements arranged in a cube geometry would result in

$$w = L = (\sqrt[3]{0.6})(20.8) = 16.1 \text{ cm}$$

The corresponding volume and weight of the shield are:

$$V = (4.19)(31.8)^3 + (3.14)(3)(16.1)(31.8)^2 + (2)(16.1)^2(3)(31.8)$$
$$= 2.06 \times 10^5 \text{ cm}^3$$
$$W = \frac{(2.06 \times 10^5)(11.0)}{454} = 4{,}990 \text{ lb}$$

The weight saving is

$$12{,}000 - 4{,}990 \text{ lb} = 7010 \text{ lb},$$

the fractional weight saving being

$$\frac{7{,}010}{12{,}000} = 0.58$$

Additional Cooling Time. Holding the element an additional year before shipping would result in a further reduction in intensity by a factor of

$$e^{1\cdot\lambda} = e^{-0.920} = 0.399$$

giving a dose

$$D/p_o = \frac{8.4 \times 10^{-16}}{0.399} = 2.1 \times 10^{-15}$$

which corresponds to a thickness of 29.8 cm or 11.7 in. The shield weight and volume are

$$W = (2.42 \times 10^{-2})(4.32 \times 10^{5}) = 10{,}450 \text{ lb}$$

$$V = (4.19)(0.265\text{x}10^{5}) + (2.55\text{x}10^{2})(0.888\text{x}10^{3}) + (3.160\text{x}10^{3})(0.298\text{x}10^{3})$$

$$= 4.32 \times 10^{5} \text{ cm}^{3}$$

This results in a weight saving of

$$12{,}000 - 10{,}450 = 1{,}550 \text{ lb}$$

with a fractional saving of

$$\frac{1{,}550}{12{,}000} = 0.13$$

Higher Allowable Dose Rate. Assume that the shielded package of elements can be represented by a uniform cylindrical source with a length equal to the length of the fuel element. Then the dose at z cm from the shield surface of the fuel element is

$$\frac{D(z)}{p_o} \approx \frac{\frac{(\text{Dose at surface})}{p_o}\gamma \cdot \pi\left(\frac{w}{2} + t\right) \cdot L}{2\pi(z)^2\,\gamma}$$

$$\approx \frac{D(t)}{4p_o}\,\frac{(w + 2t)L}{z^2}$$

If it is feasible, for example, to expect that no one will be allowed continuous exposure within 10 ft of the shielded element and that at this distance laboratory tolerance will be acceptable, then

$$\frac{7.5 \times 10^{-3}}{(4)(2.81 \times 10^{12})} = \frac{D(t)(12.7 + 2t)(55.9)}{(4)(10)^2\,(30.48)^2\,p_o}$$

$$\frac{D(t)}{p_o}(12.7 + 2t) = \frac{(8.4 \times 10^{-16})(4)(10)^2(30.48)^2}{55.9}$$

$$= 5.58 \times 10^{-12}$$

The shield thickness is 22.0 cm or 8.7 in. The weight of the shield is

$$W = 5{,}750 \text{ lb}$$

where the savings is

$$12{,}000 - 5{,}750 = 6{,}250 \text{ lb}$$

with a fractional weight savings of

$$\frac{6{,}250}{12{,}000} = 0.52$$

At the surface of the shield

$$D(t) = p_o\left[\frac{D(t)}{p_o}\right]$$

$$= (4)(2.84 \times 10^{12})(10^{-13})$$

$$= 0.936 \text{ r/hr}$$

Thus, with this shield, a person could stand next to the shielded element for about 20 min before receiving a week's laboratory dose.

Conclusions

The shielding weight for the burned-out fuel elements of the reactor discussed here varies considerably with the geometry and materials used. It would seem expedient to investigate the problem in considerable detail before choosing a definite shield design.