P.12 #2102

X-426 (Revised 1-52)

[redacted]

OAK RIDGE NATIONAL LABORATORY
Operated By
CARBIDE AND CARBON CHEMICALS COMPANY

UCC

POST OFFICE BOX P
OAK RIDGE, TENNESSEE

ORNL MASTER COPY

ORNL
CENTRAL FILES NUMBER
53-1-294

DATE: January 26, 1953

COPY NO.

SUBJECT: PREDICTION OF CRITICALITY BEHAVIOR OF A SLURRY UPON SETTLING

This document consists of 20 pages.
No. 8 of 21 copies, Series A.

TO: Distribution

FROM: P. R. Kasten

DISTRIBUTION

1. W. M. Breazeale
2. R. B. Briggs
3. A. D. Callihan
4. [illegible] A. Charpie
5. D. [illegible] Cronin
6. J. [illegible] Fox
7. [illegible] B. Gallaher
8. C. [illegible] Graham
9. P. R. Kasten
10. [illegible] S. [illegible]itzes
11. R. [illegible] Lyon
12. J. Marable
13. [illegible] A. Swartout
14. D. [illegible] Thomas
15. S. [illegible]
16. A. M. [illegible]berg
17. C. [illegible] Winters
18. E. [illegible] Zimmerman
19. P. C. Zmola
20. X-10 Central Files
21. HRP Reading Files (REED Library)

DECLASSIFIED

Per Letter Instructions Of
List-10
D. McGhee
For: N. T. Bray, Supervisor
Laboratory Records Dept.
ORNL

[redacted]

PREDICTION OF CRITICALITY BEHAVIOR OF A SLURRY UPON SETTLING

SUMMARY

An investigation has been made of the criticality behavior of a slurry reactor as a function of settling of the fuel particles. For a given reactor with an initial H/U^{235} ratio above a certain value, a super-critical condition can be attained as a result of slowing down of the stirrer motor. Complete stopping of the stirrer motor should lead to a less dangerous situation. The slope of the U^{235} critical mass (C.M.) vs H/U^{235} ratio curve appears important in determining the criticality behavior upon fuel settling, a super-critical condition being attainable when $d(C.M.)/d\ H/U^{235}$ is positive, zero, or slightly negative. For more negative values of $\frac{d(C.M.)}{d\ H/U^{235}}$, slurry settling will result in a sub-critical assembly.

INTRODUCTION

In the operation of a slurry reactor, a critical condition can be reached at a given fuel concentration and enrichment, under mixing conditions which disperse the fuel particles uniformly. If the slurry agitation is stopped, it is desired to know what effect the settling of the particles has upon the

criticality of the reactor. It is the purpose here to predict what the above effect will be for various initial fuel concentrations and two reactor sizes. Because some of the assumptions are crude, the absolute values are probably not valid; however, the relative results should prove useful.

THEORY

Unreflected Reactor

Consider that the initial condition is a bare reactor, of homogeneous fuel composition. Assume that as the particles settle, the composition of the lower portion of the reactor remains homogeneous, but increases in fuel concentration, leaving a reflector region above the fuel solution. This situation is depicted in Figure 1.

Using the modified one-group neutron diffusion approximation, the equations and boundary conditions which need to be satisfied to maintain criticality are

$$\nabla^2\Phi_c + B_c^2\Phi_c = 0$$

$$\nabla^2\Phi_t - \frac{1}{L_r^2}\Phi_t = 0$$

$$B_c^2 = \frac{k_c - 1}{M^2}, \text{ (known at any } H/U^{235} \text{ ratio)}$$

$$\Phi_c(0,z) = \text{finite value}$$
$$\Phi_t(0,z) = \text{finite value}$$
$$\Phi_c(r,x) = \Phi_t(r,x)$$
$$\Phi_c^1(r,x) = \Phi_t^1(r,x)\left[\Phi'(r,x) = \left(\frac{\partial\Phi}{\partial z}\right)_{z=x}\right]$$

[redacted]

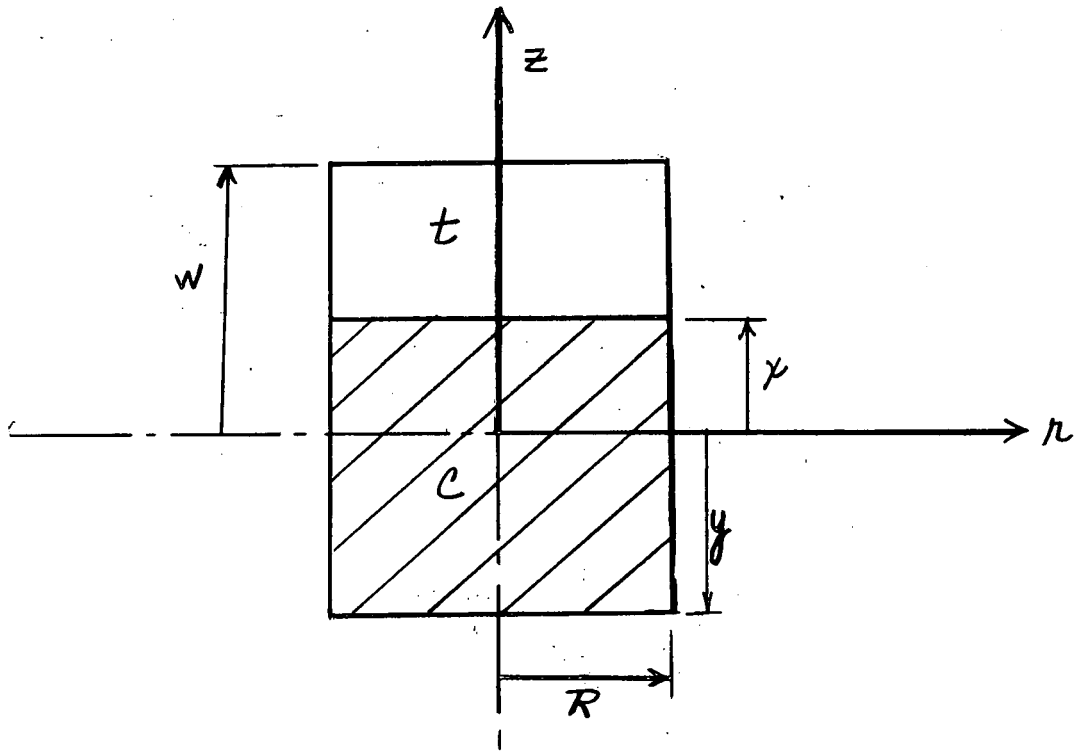

Figure 1. Homogeneous, Bare Reactor Model, with Top Reflector

where t represents the top reflector region

c represents the core region

z = vertical distance measured from point of maximum flux

r = horizontal distance measured from center of reactor

R = r evaluated at effective reactor surface

h = x + y = height of core region

x = distance from z=0 to reflector

y = distance from z=0 to effective bottom of reactor

w = distance from z=0 to effective top of reflector

[redacted]

$$\Phi_c(R,z) = 0$$
$$\Phi_t(R,z) = 0$$
$$\Phi_c(r,-y) = 0$$
$$\Phi_t(r,w) = 0$$

where

Φ_c = thermal neutron flux in core region
Φ_t = thermal neutron flux in reflector region
B_c^2 = buckling coefficient
k_c = material multiplication constant required for criticality
L_r = thermal diffusion length in reflector
M^2 = migration area of neutron from birth to capture in core

From the above, the condition required to maintain criticality can be found to be

$$\omega \tan \frac{\pi h}{2y} = \frac{\pi}{2y} \tanh \omega(x - w) \qquad (1)$$

where

$$\omega^2 = \alpha^2 + \frac{1}{L_r^2}$$

$$\alpha^2 = \left(\frac{2.405}{R}\right)^2$$

$$B_c^2 = \frac{k_c - 1}{M^2} = \alpha^2 + \left(\frac{\pi}{2y}\right)^2$$

$$h = x + y$$

For an initial H/U^{235} ratio, $h = h_c$ = height required for criticality. As the fuel particles settle, the H/U^{235} ratio will be known as a function of

h, the height of the core region. Since the H/U^{235} ratio is known as a function of h, B_c^2 can be computed as a function of h, and thus y can be found. Knowing h and y, x can be calculated. The solution of Equation 1 thus determines w - x, the height of reflector required to maintain criticality of a core region of height h and known H/U^{235} ratio.

Reflected Reactor

The reflected reactor model chosen is shown in Figure 2.

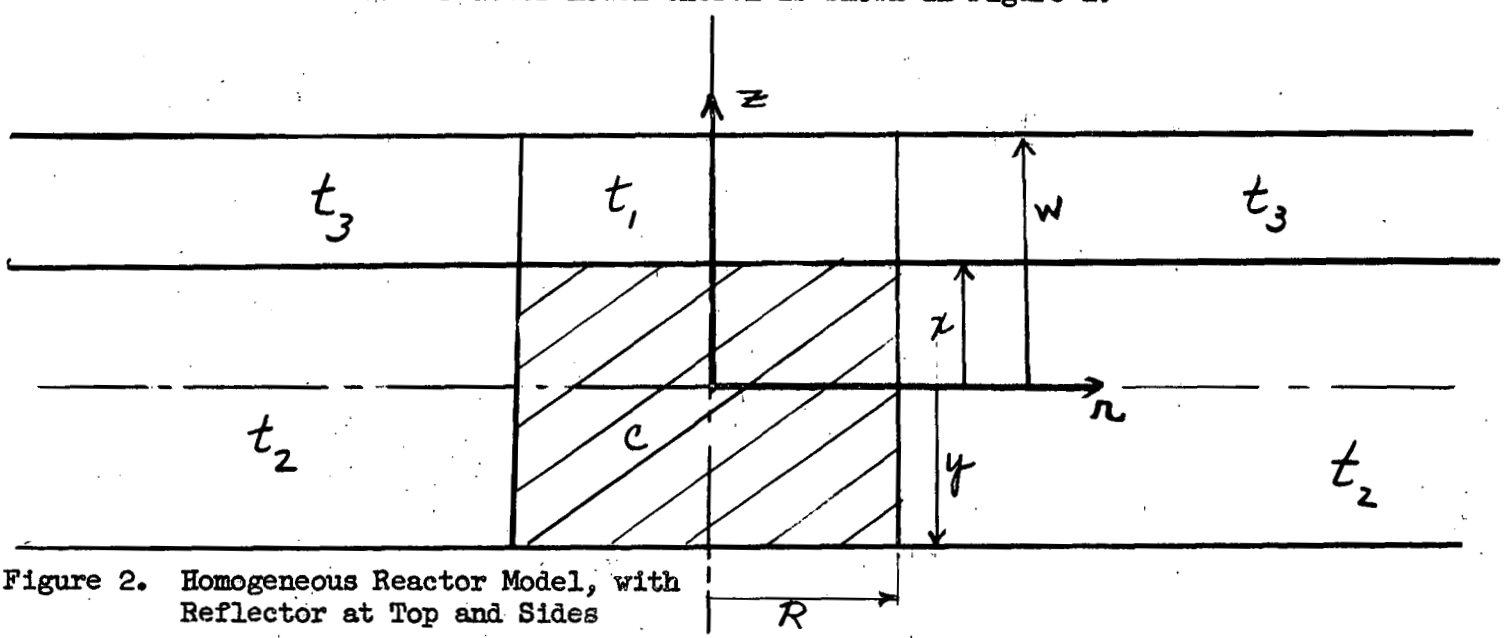

Figure 2. Homogeneous Reactor Model, with Reflector at Top and Sides

The symbols have the same meaning as before, but

t_1 = top reflector

t_2 = side reflector of height x + y

t_3 = side reflector of height w - x

and the side reflectors are infinite in extent. Equations and boundary conditions similar to the unreflected case can be written. Again assuming modified

one group theory, that the solution can be represented by using only the fundamental eigen value, and that there is no thermal flux hump at the boundary of the reflector regions, the following relations are obtained:

$$\omega \tan 2\beta(x + y) = \beta \tanh \omega(x - w) \tag{2}$$

$$\frac{\alpha J_1(\alpha R)}{J_0(\alpha R)} = \epsilon \frac{K_1(\epsilon R)}{K_0(\epsilon R)} \tag{3}$$

where

$$B_c^2 + \frac{1}{L_r^2} = \epsilon^2 + \alpha^2 \tag{4}$$

$$\epsilon^2 = \frac{1}{L_r^2} + \beta^2 \tag{5}$$

$$\omega^2 = \alpha^2 + \frac{1}{L_r^2} \tag{6}$$

$$B_c^2 = \frac{k_c - 1}{M^2} \tag{7}$$

Thus, from Equations 4 and 3, ϵ and α can be determined for each B_c^2, where B_c^2 is determined by the H/U^{235} ratio in the core, which is a function of $h = x + y$. Then, from Equations 5 and 6, β and ω can be found, so that the problem resolves itself to finding the value of $x - w$ = top reflector thickness required for criticality as determined by Equation 2.

[redacted]

Results

Calculations were performed for 10" and 12" diameter cylindrical reactors, with reflected and unreflected situations, using for initial conditions the experimental data given in report K-343*. The experimental data were also used to obtain the appropriate values for some of the constants used in the calculations. The results are given in Tables 1-4. All calculations are applied to a slurry reactor consisting of $UO_3 \cdot H_2O$ particles dispersed in light water, the uranium being 93.4% enriched. All reflectors are considered to be light water. In each group of H/U^{235} values in the tables, the first value given refers to the initial critical condition with no fuel settling, while the values below the initial values refer to the H/U^{235} ratio which would obtain if the fuel particles were dispersed uniformly throughout a region of height h.

As a matter of convenience in comparing the various situations, Figure 3 is given, which plots the critical mass of U^{235} vs H/U^{235} ratio for the initial conditions, these values taken from the experimental data given in K-343 for aqueous UO_2F_2 solution, 93.4% enriched uranium.

---

* C. K. Beck, A. D. Callihan, J. W. Morfitt, R. L. Murray
Critical Mass Studies, Part III Report K-343, Issued April 19, 1949

TABLE I

EFFECT OF SLURRY SETTLING UPON CRITICALITY IN A CYLINDRICAL REACTOR, 10" IN DIAMETER, UNREFLECTED
(h_c = core height required for criticality with no reflector)

H/U^{235} Ratio	Ht. of Core h, cm.	Ht. of Reflector $h_c - h$, cm	Calculated Reflector Ht. Req'd for Criticality $(h_c - h)_c$, cm	Remarks
31.6	35.7	0	0	Initial critical condition
25.0	29.9	5.8	$>\infty$	Sub-critical condition
20.0	25.6	10.1	$>\infty$	Sub-critical condition
43.9	32.3	0	0	Initial critical condition
31.6	24.0	8.3	$>\infty$	Sub-critical condition
25.0	20.1	12.2	$>\infty$	Sub-critical condition
20.0	17.2	15.1	$>\infty$	Sub-critical condition
62.7	31.7	0	0	Initial critical condition
43.9	23.3	8.4	$>\infty$	Sub-critical condition
31.6	17.3	14.4	$>\infty$	Sub-critical condition
25.0	14.5	17.2	$>\infty$	Sub-critical condition
86.4	31.9	0	0	Initial critical condition
62.6	23.2	8.7	$>\infty$	Sub-critical condition
43.9	17.1	14.8	$>\infty$	Sub-critical condition
31.6	12.7	19.2	$>\infty$	Sub-critical condition
123.2	34.3	0	0	Initial critical condition
100	28.1	6.2	$>\infty$	Sub-critical condition
86.4	24.4	9.9	$>\infty$	Sub-critical condition
62.6	17.7	16.6	$>\infty$	Sub-critical condition
43.9	13.1	21.2	$>\infty$	Sub-critical condition
174	38.7	0	0	Initial critical condition
123.2	27.9	10.8	$>\infty$	Sub-critical condition
100	22.9	15.8	$>\infty$	Sub-critical condition
86.4	19.9	18.8	$>\infty$	Sub-critical condition
62.6	14.5	24.2	$>\infty$	Sub-critical condition

(Continued)

TABLE I (Continued)

H/U^{235} Ratio	Ht. of Core h, cm.	Ht. of Reflector $h_c - h$, cm	Calculated Reflector Ht. Req'd for Criticality $(h_c - h)_c$, cm	Remarks
226	46.6	0	0	Initial critical condition
174	35.9	10.7	5.6	Reflector causes super-critical condition
123.2	25.9	20.7	$>\infty$	Sub-critical condition
100	21.2	25.4	$>\infty$	Sub-critical condition
86.4	18.4	28.2	$>\infty$	Sub-critical condition
62.6	13.4	33.2	$>\infty$	Sub-critical condition
43.9	9.9	36.7	$>\infty$	Sub-critical condition
320	67.3	0	0	Initial critical condition
270	58.3	9.0	0-1.3 core ht.	Moderator efficiency causes super-critical condition
226	47.5	19.8	0-.9 core ht.	Moderator efficiency causes super-critical condition
174	36.6	30.7	5.4	Reflector causes super-critical condition
123.2	26.4	40.9	$>\infty$	Sub-critical condition
100	21.7	45.6	$>\infty$	Sub-critical condition
86.4	18.8	48.5	$>\infty$	Sub-critical condition

TABLE II

EFFECT OF SLURRY SETTLING UPON CRITICALITY IN A CYLINDRICAL REACTOR, 12" IN DIAMETER, UNREFLECTED
(h_c = core height required for criticality with no reflector)

H/U^{235} Ratio	Ht. of Core h, cm	Ht. of Reflector $h_c - h$, cm	Calculated Reflector Ht. Req'd for Criticality $(h_c - h)_c$, cm	Remarks
62.6	23.7	0	0	Initial critical condition
43.9	17.4	6.3	$>\infty$	Sub-critical condition
174	24.7	0	0	Initial critical condition
123.2	17.8	6.9	$>\infty$	Sub-critical condition
100	14.6	10.1	$>\infty$	Sub-critical condition
86.4	12.7	12.0	$>\infty$	Sub-critical condition
62.6	9.2	15.5	$>\infty$	Sub-critical condition
226	26.2	0	0	Initial critical condition
174	20.2	6.0	$>\infty$	Sub-critical condition
123.2	14.6	11.6	$>\infty$	Sub-critical condition
100	12.0	14.2	$>\infty$	Sub-critical condition
86.4	10.4	15.8	$>\infty$	Sub-critical condition
320	30.3	0	0	Initial critical condition
270	26.2	4.1	5.8	Sub-critical, but reflector almost makes it critical
226	21.4	8.9	$>\infty$	Sub-critical condition
174	16.5	13.8	$>\infty$	Sub-critical condition
123.2	11.9	18.4	$>\infty$	Sub-critical condition
100	9.8	20.5	$>\infty$	Sub-critical condition
499	48.8	0	0	Initial critical condition
400	40.5	8.3	0-4.0 cm core ht.	Moderator Eff. causes super-critical condition
320	31.7	17.1	0-1.4 cm core ht.	Moderator Eff. causes super-critical condition
270	27.4	21.4	0-0.2 cm core ht.	Moderator Eff. causes super-critical condition
226	22.4	26.4	$\sim\infty$	Sub-critical condition(refl. may be finite ht.)
174	17.2	31.6	$>\infty$	Sub-critical condition

TABLE III

EFFECT OF SLURRY SETTLING UPON CRITICALITY IN A CYLINDRICAL REACTOR, 10" IN DIAMETER, REFLECTED
(h_c = core height required for criticality with no top reflector)

H/U^{235} Ratio	Ht. of Core h, cm	Ht. of Top Reflector h_c-h, cm	Calculated Top Reflector Required for Criticality $(h_c - h)_c$, cm	Remarks
31.6	15.3	0	0	Initial critical condition
24.4	12.7	2.6	$>\infty$	Sub-critical condition
43.9	14.9	0	0	Initial critical condition
31.6	11.1	3.8	$>\infty$	Sub-critical condition
24.4	9.2	5.7	$>\infty$	Sub-critical condition
62.7	15.2	0	0	Initial critical condition
43.9	11.2	4.0	$>\infty$	Sub-critical condition
31.6	8.3	6.9	$>\infty$	Sub-critical condition
24.4	6.9	8.3	$>\infty$	Sub-critical condition
86.4	15.4	0		
62.7	11.2	4.2	0	Initial critical condition
43.9	8.2	7.2	$>\infty$	Sub-critical condition
31.6	6.1	9.3	$>\infty$	Sub-critical condition
24.4	5.1	10.3	$>\infty$	Sub-critical condition
123.2	16.8	0	0	Initial critical condition
86.4	11.9	4.9	$>\infty$	Sub-critical condition
62.7	8.7	8.1	$>\infty$	Sub-critical condition
43.9	6.4	10.4	$>\infty$	Sub-critical condition
174	18.1	0	0	Initial critical condition
123.2	13.1	5.0	$>\infty$	Sub-critical condition
86.4	9.3	8.8	$>\infty$	Sub-critical condition
62.7	6.8	11.3	$>\infty$	Sub-critical condition

(Continued)

TABLE III (Continued)

H/U^{235} Ratio	Ht. of Core h, cm	Ht. of Top Reflector h_c-h, cm	Calculated Top Reflector Required for Criticality $(h_c - h)_c$, cm	Remarks
226	19.9	0	0	Initial critical condition
174	15.4	4.5	$\sim\infty$	Sub-critical condition (refl. may be finite ht.)
123.2	11.1	8.8	$>\infty$	Sub-critical condition
86.4	7.9	12.0	$>\infty$	Sub-critical condition
320	25.0	0	0	Initial critical condition
226	17.7	7.3	$\sim\infty$	Sub-critical condition (refl. may be finite)
174	13.6	11.4	$>\infty$	Sub-critical condition
123.2	9.8	15.2	$>\infty$	Sub-critical condition

TABLE IV

EFFECT OF SLURRY SETTLING UPON CRITICALITY IN A CYLINDRICAL REACTOR, 12" IN DIAMETER, REFLECTED
(h_c = core height required for criticality with no top reflector)

H/U^{235} Ratio	Ht. of Core h, cm.	Ht. of Top Reflector h_c-h, cm	Calculated Top Reflector Required for Criticality $(h_c - h)_c$, cm	Remarks
174	14.9	0	0	Initial critical condition
62.6	5.6	9.3	$>\infty$	Sub-critical condition
226	16.5	0	0	Initial critical condition
174	12.7	3.8	$\sim\infty$	Sub-critical condition (reflector may be finite)
62.6	4.8	11.7	$>\infty$	Sub-critical condition
320	18.6	0	0	Initial critical condition
226	13.1	5.5	$>\infty$	Sub-critical condition
174	10.1	8.5	$>\infty$	Sub-critical condition
62.6	3.8	14.8	$>\infty$	Sub-critical condition
499	26.3	0	0	Initial critical condition
320	17.0	9.3	5.0	Top reflector causes super-critical condition
226	12.0	14.3	$>\infty$	Sub-critical condition
174	9.3	17.0	$>\infty$	Sub-critical condition
755	48.7	0	0	Initial critical condition
499	32.0	16.7	0-5.7 core ht.	Moderator Eff. causes super-critical condition
320	20.8	27.9	0-2.2 core ht.	Moterator Eff. causes super-critical condition
226	14.7	34.0	9.	Top reflector causes super-critical condition
174	11.3	37.4	$>\infty$	Sub-critical condition

[redacted]

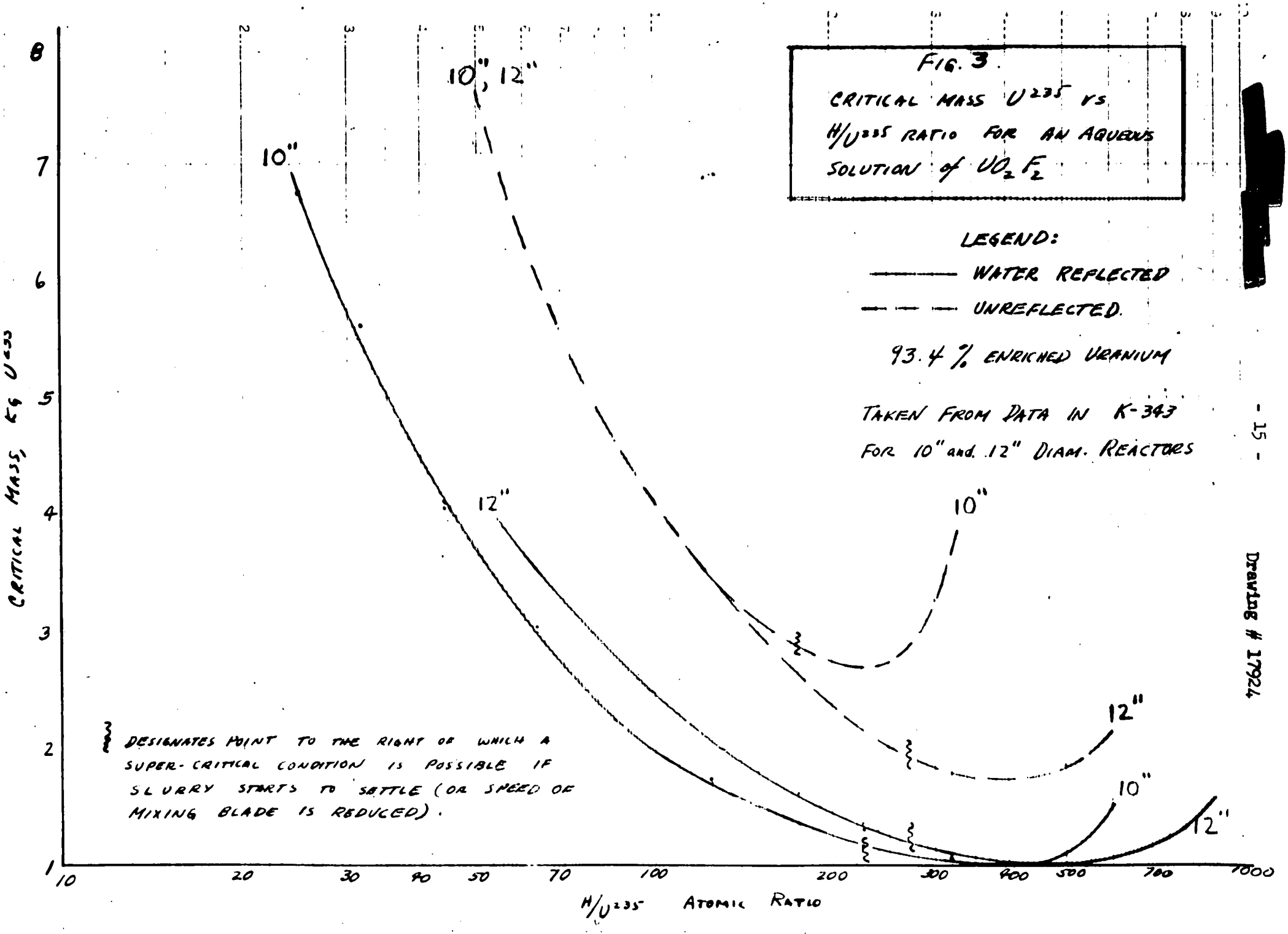

Drawing # 17924

DISCUSSION AND CRITIQUE

From Tables 1-4, it appears that for a particular reactor, a super-critical condition is attainable by slurry settling if the initial H/U^{235} ratio exceeds some value designated approximately by the mark ξ on Figure 3. Below this H/U^{235} value, the settling of the slurry will only cause a sub-critical condition. Inspection of Tables 1-4 and Figure 3 reveals that in all cases considered a super-critical condition is attainable when the slope of the Critical Mass (C.M.) vs H/U^{235} curve is positive, zero, or slightly negative, and that when $\frac{d(C.M.)}{d\ H/U^{235}}$ is more negative than it is at the point designated by ξ, slurry settling can only result in a sub-critical condition. Also, as $\frac{d\ C.M.}{d\ H/U^{235}}$ increases in value, the more dangerous the situation can become. For values of H/U^{235} between ξ and $\frac{d\ C.M.}{d\ H/U^{235}} = 0$, the effect of a top reflector can cause a super-critical condition to occur as a result of settling of the fuel. For H/U^{235} greater than at the point $\frac{d\ C.M.}{d\ H/U^{235}} = 0$, no reflector is required for a super-critical condition, increased moderator efficiency being sufficient to cause such a condition. From this it appears that the greater the numerical value of the slope of the C.M. vs H/U^{235} curve, the more dangerous the possible situation which can occur as a result of fuel settling; conversely, the lesser the value of $\frac{d(C.M.)}{d\ H/U^{235}}$, the safer is the condition which occurs as a result of fuel settling.

Comparing the reflected and unreflected cases, it appears that for points to the right of ξ, a lesser value of $\frac{d\ C.M.}{d\ H/U^{235}}$ is required for the reflected case to give like situations with regard to the criticality behavior upon settling. However, at a given H/U^{235} ratio past $\frac{d(C.M.)}{d\ H/U^{235}} = 0$, the C.M. vs H/U^{235} curves for the unreflected reactors have greater slopes than for the reflected reactors. On this basis, the reflected reactors are not as dangerous as bare reactors if the initial condition is to the right of the point where $d\ C.M./d\ H/U^{235} = 0$, while bare reactors are safer if the initial H/U^{235} ratio lies to the left of ξ.

Inherent in the above discussion is the assumption that a homogeneous fuel dispersion is the worst condition which can be achieved under the experimental conditions. This should be valid for bare reactors where no significant percentage of the leakage neutrons are returned to the reactor. However, as stated by E. L. Zimmerman, experiments indicate that an ordinary water reflector will cause a thermal flux hump near the reactor edge, and perhaps settled fuel particles will assume more importance if near the thermal flux hump near the reactor bottom than if distributed uniformly. But, in settling, it appears more reasonable that the above effect will be cancelled out by the loss of fuel particles near the reflected sides of the reactor. If this is true, slowing down of the reactor stirrer motor when the initial H/U^{235} ratio is to the right of point ξ should give a more dangerous condition than stopping the stirrer completely, and indeed, this has been observed.

In the calculations for the reflected reactor, no consideration was given to a bottom reflector for mathematical simplicity. The philosophy held was that the addition of any reflector in the chosen model should indicate the direction of the effect of a reflector. Thus, the points $\{$ for the reflected case are not as accurately positioned as for the bare reactors considered.

For purposes of rapid conversion of gms U^{235}/cc to H/U^{235} ratio, Figure 4 is provided, which is taken directly from Report K-343.

It should be borne in mind that these calculations were for homogeneous fuel situations, and since a slurry will not settle in this manner, the calculations refer more correctly to situations where the stirrer motor is slowed down. It is felt that the fuel settling resulting from stopping the stirrer completely is much less dangerous than for the above situations.

To obtain an idea of the amount of excess reactivity which is available upon slowing down of the stirrer motor, consider the bare, 12 inch diameter reactor referred to in Table II, operating at an initial H/U^{235} ratio of 500. Considering that the effective settling causes an H/U^{235} of 320 in the core region,

$$k_e = 1 + B^2M^2$$

$$\frac{\partial k_e}{\partial h} = M^2 \frac{\partial B^2}{\partial h}$$

$$\approx M^2\left(-\frac{2\pi^2}{h^3}\right)$$

$$\approx 35\left(-\frac{2\pi^2}{32^3}\right) = -.021/\text{cm}$$

[redacted]

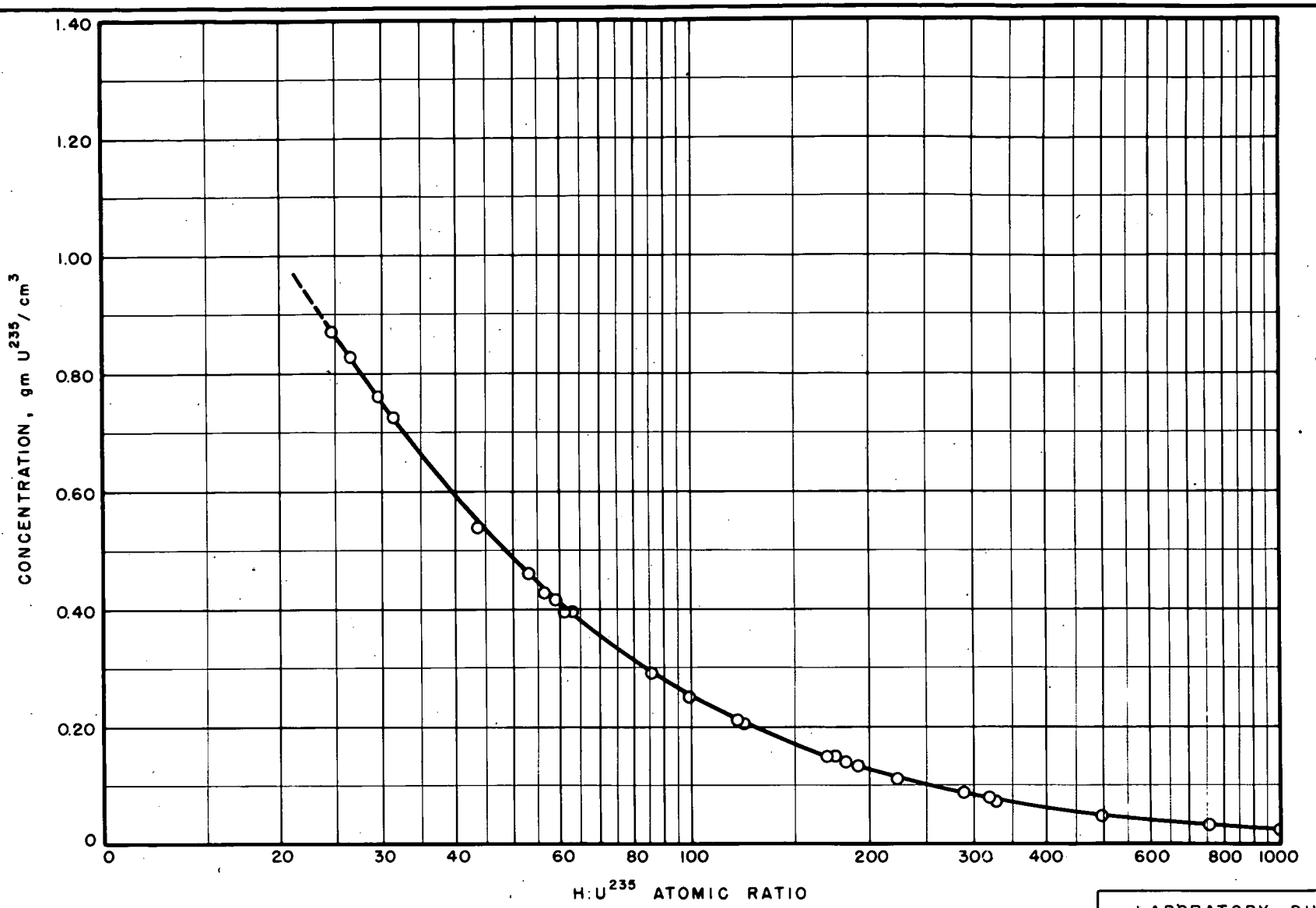

FIGURE 4

LABORATORY DIVISION	
AQUEOUS UO_2F_2 SOLUTION CONCENTRATION, gm U^{235}/cm^3 VS $H:U^{235}$ ATOMIC RATIO	
K-25 PLANT CARBIDE & CARBON CHEMICALS CORP	
DRWN. F.C. Allen	APPV'D
DATE: APRIL 6, 1949	DWG NO: LD-B795

From Table II, if the core H/U^{235} is now 320, this will leave a 17.1 cm top reflector. This corresponds to an excess k equivalent to 17.1 cm of reflector plus 1.4 cm of core height. Consider this to be equivalent to 7 cm of core height, with $H/U^{235} = 320$. At this atomic ratio, $k_c \approx 1.9$, and

$$\frac{\Delta k}{k_c} = \% \text{ excess } k = \frac{.021(7)}{1.9} \approx 7.8\% \text{ excess k possible}$$

From the above illustration, it is evident that a very dangerous condition can occur if the stirrer motor is slowed during critical experiments.

If the original condition is $H/U^{235} = 499$ and the fuel settles enough to give an 8.3 cm reflector, a similar calculation can again be made using the data of Table II (letting the 8.3 cm reflector $\simeq$ 3 cm core ht.), obtaining

$$\frac{\Delta k}{k_c} = 4.2\% \text{ excess k}$$

To get the same amounts of excess reactivity for the reflected reactor, the original H/U^{235} ratio would probably have to be above 600 in a 12" diameter reactor.

Paul R. Kasten

P. R. Kasten

PRK:tks

[redacted]