[redacted]

OAK RIDGE NATIONAL LABORATORY LIBRARY
3 4456 0022213 1

ORNL-1694
Progress
4a

AEC RESEARCH AND DEVELOPMENT REPORT
LABORATORY RECORDS

INSTRUMENTATION AND CONTROLS DIVISION

SEMIANNUAL PROGRESS REPORT

FOR PERIOD ENDING JULY 31, 1953

[redacted]

CLASSIFICATION CHANGED TO: UNCLASSIFIED
BY AUTHORITY OF: TID-1227
BY: N. Bauman 8/5/60

CENTRAL RESEARCH LIBRARY
DOCUMENT COLLECTION
LIBRARY LOAN COPY
DO NOT TRANSFER TO ANOTHER PERSON
If you wish someone else to see this document, send in name with document and the library will arrange a loan.

OAK RIDGE NATIONAL LABORATORY
OPERATED BY
CARBIDE AND CARBON CHEMICALS COMPANY
A DIVISION OF UNION CARBIDE AND CARBON CORPORATION
UCC
POST OFFICE BOX P
OAK RIDGE, TENNESSEE

[redacted]

[redacted]

4A

ORNL 1694

[redacted] 39 pages
[redacted] Series A

C t ct No W 7405 e g 26

INSTRUMENTATION AND CONTROLS DIVISION

SEMIANNUAL PROGRESS REPORT

for Period Ending July 31, 1953

C J Borkowski Director

DATE ISSUED

MAY 11 1954

OAK RIDGE NATIONAL LABORATORY
Ope at d by
CARBIDE AND CARBON CHEMICALS COMPANY
A D v i of U io Ca b de nd Carbo Corpo ation
P t Office Box P
Oak Ridge Te nessee

3 4456 0022213 1

[redacted]

[redacted]

INTERNAL DISTRIBUTION

1 C E Center
2 Biology Library
3 Health Physics Library
4 5 Central Research Library
6 Reactor Experimental Engineering Library
7 11 Laboratory Records Department
12 Laboratory Records ORNL R C
13 C E Larson
14 S Cromer (K 25)
15 L B Emlet (K 25)
16 J P Murray (Y 12)
17 A M Weinberg
18 E H Taylor
19 E J Murphy
20 E D Shipley
21 C S Harrill
22 F C VonderLage
23 W H Jordan
24 J A Swartout
25 S C Lind
26 F L Culler
27 A H Snell
28 A Hollaender
29 M T Kelley
30 K Z Morgan
31 T A Lincoln
32 A S Householder
33 C E Winters
34 D W Cardwell
35 E M King
36 M M Reynolds
37 W J Ladniak
38 P R Bell
39 C J Borkowski
40 W M Hurst
41 R S Livingston
42 E E Fairstein
43 J W Morfitt
44 C W Sheppard
45 W G Stone
46 D D Cowen
47 C P Keim
48 C D Susano
49 P M Reyling
50 G C Williams
51 M J Skinner
52 53 J V Francis

EXTERNAL DISTRIBUTION

54 Aircraft Laboratory (WADC)
55 AF Plant Representative Seattle
56 AF Plant Representative Wood Ridge
57 American Cyanamid Company
58 American Machine and Foundry Company
59 ANP Project Office Fort Worth
60 64 Argonne National Laboratory
65 Armed Forces Special Weapons Project (Sandia)
66 Army Chemical Center
67 69 Atomic Energy Commission Washington
70 Babcock and Wilcox Company
71 Battelle Memorial Institute
72 Bendix Aviation Corporation
73 74 Brookhaven National Laboratory
75 Bureau of Mines Salt Lake City
76 Bureau of Ships
77 78 Carbide and Carbon Chemicals Company (C 31 Plant)
79 80 Carbide and Carbon Chemicals Company (K 25 Plant)
81 84 Carbide and Carbon Chemicals Company (Y 12 Plant)
85 Chicago Patent Group

[redacted]

[redacted]

86 Chief of Naval Research
87 Columbia University (Failla)
88 Columbia University (Havens)
89 Commonwealth Edison Company
90 Detroit Edison Company
91 Dow Chemical Company (Rocky Flats)
92 94 duPont Company Augusta
95 Duquesne Light Company
96 Foster Wheeler Corporation
97 98 General Electric Company (NPD)
99 General Electric Company (APS)
100 102 General Electric Company Richland
103 104 Goodyear Atomic Corporation
105 Hanford Operations Office
106 Iowa State College
107 Kirtland Air Force Base
108 109 Knolls Atomic Power Laboratory
110 111 Los Alamos Scientific Laboratory
112 Mallinckrodt Chemical Works
113 Massachusetts Institute of Technology (Evans)
114 Metallurgical Project
115 Monsanto Chemical Company
116 118 Mound Laboratory
119 National Advisory Committee for Aeronautics Cleveland
120 National Bureau of Standards
121 National Lead Company of Ohio
122 Naval Medical Research Institute
123 124 Naval Research Laboratory
125 New Brunswick Laboratory
126 Newport News Shipbuilding and Dry Dock Company
127 New York Operations Office
128 129 North American Aviation Inc
130 Patent Branch Washington
131 134 Phillips Petroleum Company (NRTS)
135 Powerplant Laboratory (WADC)
136 Pratt & Whitney Aircraft Division (Fox Project)
137 Public Health Service
138 Rand Corporation
139 Sandia Corporation
140 The Surgeon General
141 142 U S Geological Survey
143 U S Naval Radiological Defense Laboratory
144 UCLA Medical Research Laboratory
145 147 University of California Radiation Laboratory Berkeley
148 149 University of California Radiation Laboratory Livermore
150 151 University of Rochester
152 Vitro Corporation of America
153 Western Reserve University (Friedell)
154 157 Westinghouse Electric Corporation
158 Yale University
159 173 Technical Information Service Oak Ridge

[redacted]

[redacted]

CONTENTS

INTRODUCTION 1

INDUSTRIAL INSTRUMENT ENGINEERING SECTION 3
- Reactor Experimental Engineering Instrumentation 3
  - Instrumentation of reactor shim rod test stand 3
  - Instrumentation for determining instantaneous power expended in a boiling solution 3
  - Conductivity transient measuring system for flow studies 3
  - 4000 gpm pump test loop 3
  - Valve test loop 4
- Instrument Developments for Unit Operations Thorex Studies 4
  - Pneumatic detection of interface level 4
  - Interface level and amplitude detection by capacity measurement 5
  - Pneumatic detector for pulse amplitude 7
  - Pulse monitoring with an oscilloscope 7
  - Flowmeters for radioactive liquids 8
- Automatic Sequence Controller Q 1328 for Isothermal Transformation Equipment – Metallurgy 9
- Instrumentation for the Rezex Process 10
- Instrumentation for Experimental UNH Denitration Studies Q 1416 12
- Precise Constant Temperature Controller for Metal Block Furnace 12
- Continuously Standardizing Precision Potentiometer Q 1489 13
- Color Comparator for the Alloys Development Program 14
- Thorex Pilot Plant Instrumentation 17

CIRCUIT DEVELOPMENT SECTION 18
- Linear Count Rate Meter Q 1451 18
- Preamplifier for Electron Attachment Studies Q 1458 18
- Resin Column Scanner Q 1488 22
- Switching Pulse and Auxiliary Gate Off Circuit 22
- An a c Operated Feedback Electrometer 24
- Biological Instrumentation of Liquid Scintillation Counter for C^{14} 25

RADIATION DETECTION SECTION 26
- Small Cathode $B^{10}F_3$ Counters 26
- Fast Neutron Proportional Counters for Dosimetry 27

HIGH VOLTAGE INSTRUMENTATION SECTION 29
- 2 Mev Van de Graaff Generator 29
- 5 Mev Van de Graaff Generator 29
- 250 kev Cockcroft Walton Generator 29
- General Activity 29

FABRICATION AND MAINTENANCE SECTION 30
- Preliminary Work on a U^{235} Thermopile 30
  - Construction of the U^{235} thermopile 30
  - Testing of the U^{235} thermopile 31
  - Conclusions 31
- Magnaflow Flowmeter Model T18 7P0 5 60 Service Report 32

[redacted]

DWG 23470

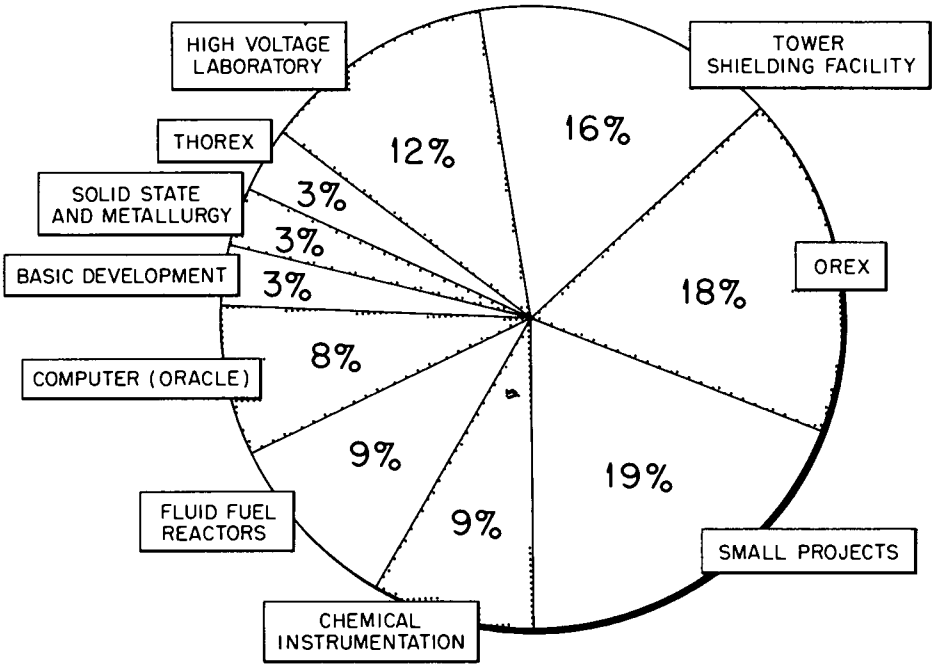

ENGINEERING AND DEVELOPMENT ACTIVITY BREAKDOWN

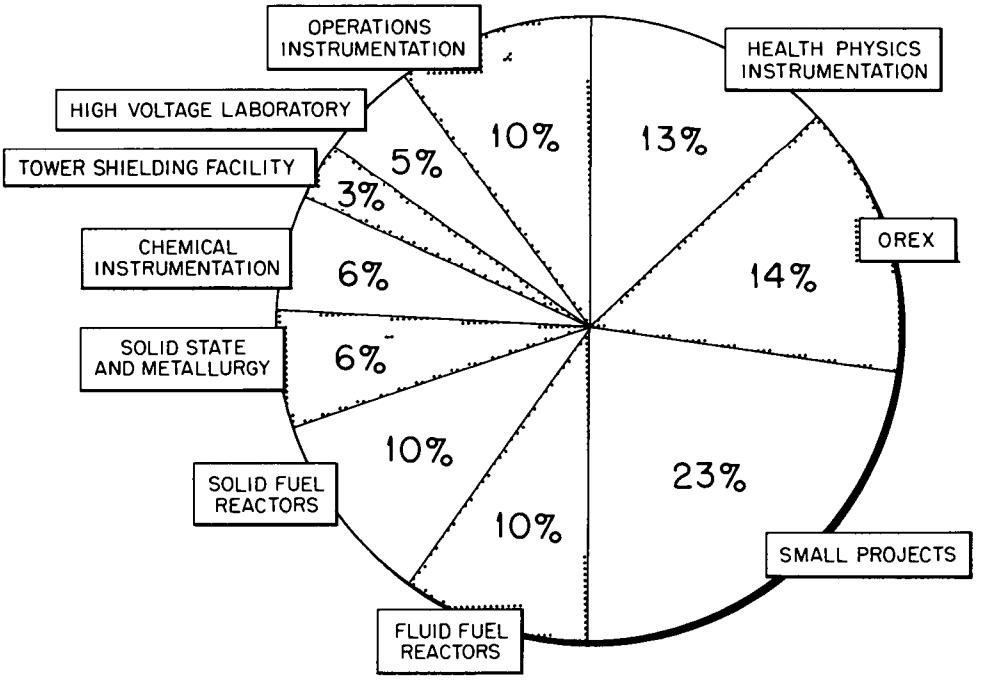

FABRICATION AND MAINTENANCE ACTIVITY BREAKDOWN

[redacted]

INSTRUMENTATION AND CONTROLS DIVISION SEMIANNUAL PROGRESS REPORT

INTRODUCTION

Activity breakdowns of the engineering and development and fabrication and maintenance efforts of the Instrument Department expended on projects which are parts of major programs of the Laboratory are shown in the charts As can be noted the OREX project received a greater percentage of engineering and development activity plus fabrication and maintenance activity than any other single project of the Laboratory

The work completed on the OREX process the Tower Shielding Facility the fluid fuel reactor instrumentation and the digital computer (ORACLE) will not be reported at this time but will be given in subsequent semiannual reports as the projects near completion

[redacted]

INDUSTRIAL INSTRUMENT ENGINEERING SECTION

REACTOR EXPERIMENTAL ENGINEERING INSTRUMENTATION

J N Baird, Jr D G Davis
A M Billings J W Bedford[1]
D S Toomb, Jr [1]

Instrumentation of Reactor Shim Rod Test Stand

The shim rod test stand was supplied with instrumentation which included an automatic cycling circuit for continuously raising and dropping the shim rod in a stream of flowing water an orifice for indication of water flow rate, and a control board This equipment was used for conducting tests in which the release time of the shim rod release mechanism was measured at intervals during a simulated life test of over 2000 cycles After the equipment was operated for 1000 cycles and the release mechanism was modified the release time was found to be of the order of 9 msec

The release time was measured as the interval between the first downward movement of the spring loaded solenoid plunger which held the shim rod engaged and the first downward movement of the shim rod itself

Measurement of release time was accomplished by a Hewlett Packard audio oscillator set at 10 kc and fed into two Q 1010 64 scalers connected in cascade The precision microswitches and adjustable contacts were so arranged that the first downward movement of the solenoid plunger closed the measuring circuit and the first downward movement of the shim rod opened it With the oscillator frequency known the time interval was calculated from the number of counts recorded by the scalers The oscillator frequency was checked periodically to assure calibration

Instrumentation for Determining Instantaneous Power Expended in a Boiling Solution

Engineering Research personnel have constructed a circulating boiling system which is intended to simulate the action of a boiling reactor A regulated voltage (0 to 440 v 60 cycle, ac) is applied across two long narrow, flat electrodes that are suspended vertically in an aqueous solution of electrolyte The electrolyte is contained in the vertical leg of an all glass loop that permits circulation by natural convection Due to the electrical resistance of the liquid heat is generated with in the liquid in a manner similar to heat generation in a reactor When the liquid reaches the boiling point, the evolution of bubbles decreases the over all conductivity between the two plates resulting in a decrease in power drawn by the system Measurement of current and voltage provides a measure of the resistance of the conductivity cell and an indirect measure of the volume of vapor generated Correlation between the power expended and the volume of vapor generated is desired

The normal current flowing between the electrodes is 100 to 200 amp Small fluctuations in current that indicate incipient boiling are not discernible on the ammeter usually employed in this range hence instrumentation was provided that has variable suppression so that it can measure and record small changes in large currents

Conductivity Transient Measuring System for Flow Studies

A high speed conductivity recording system utilizing probes fabricated into ¼ in stainless steel tubing was constructed for the Hydrodynamics Group to provide an instrument for indicating the pattern of fluid flow in vessels

The conductivity probes are connected as one leg of a resistance bridge circuit any conductivity changes will unbalance this bridge The unbalance is then detected by a Foxboro unit and a mechanical oscillograph is used to record the information Polarization effects are avoided by the use of low voltage a high cell resistance and a high frequency supply (100 cps as supplied by the oscillator in the Foxboro chassis)

Oscillograms were made while 1% salt solution was being added rapidly to the suction line of a pump in a low volume recirculating system The oscillograms indicated the time for the salt slug to travel from the inlet probe to a movable probe thus residence periods in the system were determined These relative amplitudes of the conductivity waveforms helped to establish the flow pattern

4000 gpm Pump Test Loop

Instrumentation is almost complete for the loop designed to test a Byron Jackson canned rotor

[1] Reactor Experimental Engineering Division

pump that delivers 4000 gpm in a system maintained at 250°C and 1000 psi

The instrumentation includes a thorough interlock and control system which will protect the pump and loop against all conceivable component failures resulting from abnormal operation

An electrical probe to detect seal water in the bearing chamber of the 4000 gpm Byron Jackson pump will be used as an interlock in the pump starting circuit Two types of high pressure probes are presently being evaluated The first is designed around a modified Conax Company thermocouple gland and utilizes porcelain for an insulating material and talc for a sealant The second probe is a standard Robertshaw Fulton Controls Company Type 703 high pressure electrode and utilizes a Teflon compressing seal and a Synthane insulator All metal parts of both probes are made of stainless steel

Valve Test Loop

The valve test loop has operated for a total of 150 hr with the following valve designs being tested with 150°C water at 1000 psi

1 three Fulton Sylphon ½ in stainless steel bellows sealed valves with the following trim sets (a) seat type 347 stainless steel with Stellite No 6 inlay plug Stellite No 6 (b) seat titanium 75A with gold gasket plug titanium 75A (c) seat titanium 150A plug nitrided titanium 150A
2 a diaphragm sealed poppet plug type of sampling valve with a crystal bar seat and a nitrided crystal bar titanium conical poppet
3 a corrosion loop type of sampling valve with a valve body and integral seat of titanium 75A and a plug of titanium RC 70

Considerable trouble has been experienced with leakage past the plunger of the 65 gph Milton Roy Company pump used for the circulation in the loop At the present time the loop is shut down pending the installation of a Lapp pulsafeeder pump which appears to be most likely to give leak free service when pumping against 1000 psi head When the pulsafeeder is installed valves will be tested with fuel circulating in the system

INSTRUMENT DEVELOPMENTS FOR UNIT OPERATIONS THOREX STUDIES

T M Gayle

Pneumatic Detection of Interface Level

One of the major efforts for Unit Operations facilities has been to provide a workable rugged detector for the accurate determination of interface position The detection of interface level by bubbling air through dip tubes has been extensively used One of the problems inherent in this type of system however has been to obtain a differential pressure transmitter or recorder of sufficient sensitivity to make interface level changes readable In the Purex pilot plant a span of approximately 20 in of H_2O of column differential was obtained With the probe separation and the gravity differential used this represented only about a 10% change in reading on the recorder chart for full travel of the interface between probe limits

Considerable success has been experienced by the adaptation of a low range Taylor model 206 transmitter (Fig 1) for this service This instrument contains a standard differential range of 0 to 5 in of H_2O and may be adjusted down to 0 to 2 9 in of H_2O representing an increase in sensitivity over previous devices of this type by a factor of approximately 7 The Taylor transmitter does not incorporate a pilot or volume booster and there was some doubt as to its accurate measurement on a pulsing system Subsequently however it was found in several tests that the amount of pulsing encountered in the top section is not of sufficient severity to cause appreciable error in measurement

Data indicate that for Thorex runs a gravity separation of 0 2 sp gr between organic and aqueous phases will always be available Since the range of the transmitter is conservatively 3 in of H_2O probe separation can be as low as (3/0 2) or 15 in for 3 to 15 psi output from the transmitter Simply stated a standard recording instrument can be used with the standard full scale span representing 15 in of travel of the interface

Another advantage of the Taylor transmitter is that it can be adapted to incorporate mechanical suppression In order to balance initially the back pressure readings from the dip tubes for a

[redacted]

[redacted]
DWG 19951A

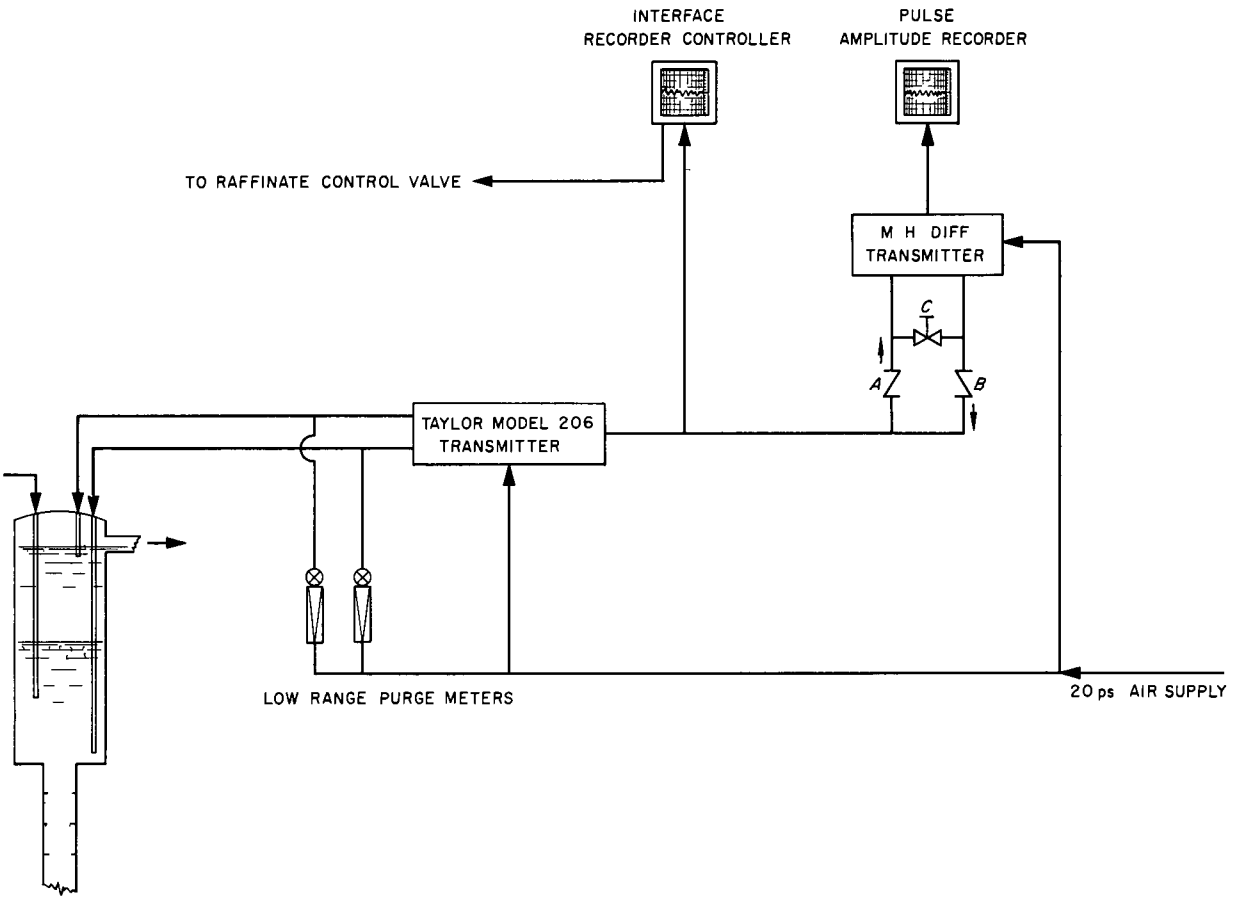

Fig 1 Pneumatic Interface Detector and Pulse Amplitude Recorder

condition in which there is all organic phase between the tubes it is necessary to insert a fixed amount of back pressure in the shorter probe line usually in the form of an external liquid sup pression pot With slight modifications this sup pression can be accomplished internally in the Taylor transmitter thus the external pot and the maintenance required on such a device are elimi nated

With the large readable signal of interface posi tion now available automatic control of this position has become feasible

Interface Level and Amplitude Detection by Capacity Measurement

An active interest has been taken in the possi bility of determining interface level by electrical capacity measurement In this method advantage is taken of the difference in dielectric values of the organic and aqueous phases and it is apparent that the easiest way to accomplish this would be to suspend an insulated rod down into the top of the column (Fig 2) If the aqueous phase were well grounded as it always is in a metal column the change in capacity between the rod and ground would be largely determined by the height of the aqueous phase around the rod Initial work has established that this probe to ground method is satisfactory A rod ½ in in diameter and approxi mately 25 in long was inserted in a procelain insulating tube for installation in the column

A standard Foxboro Dynalog instrument was used to record the change in capacity This instrument was chosen because the circuit is very stable and the instrument is a rugged proven industrial unit that is commercially available

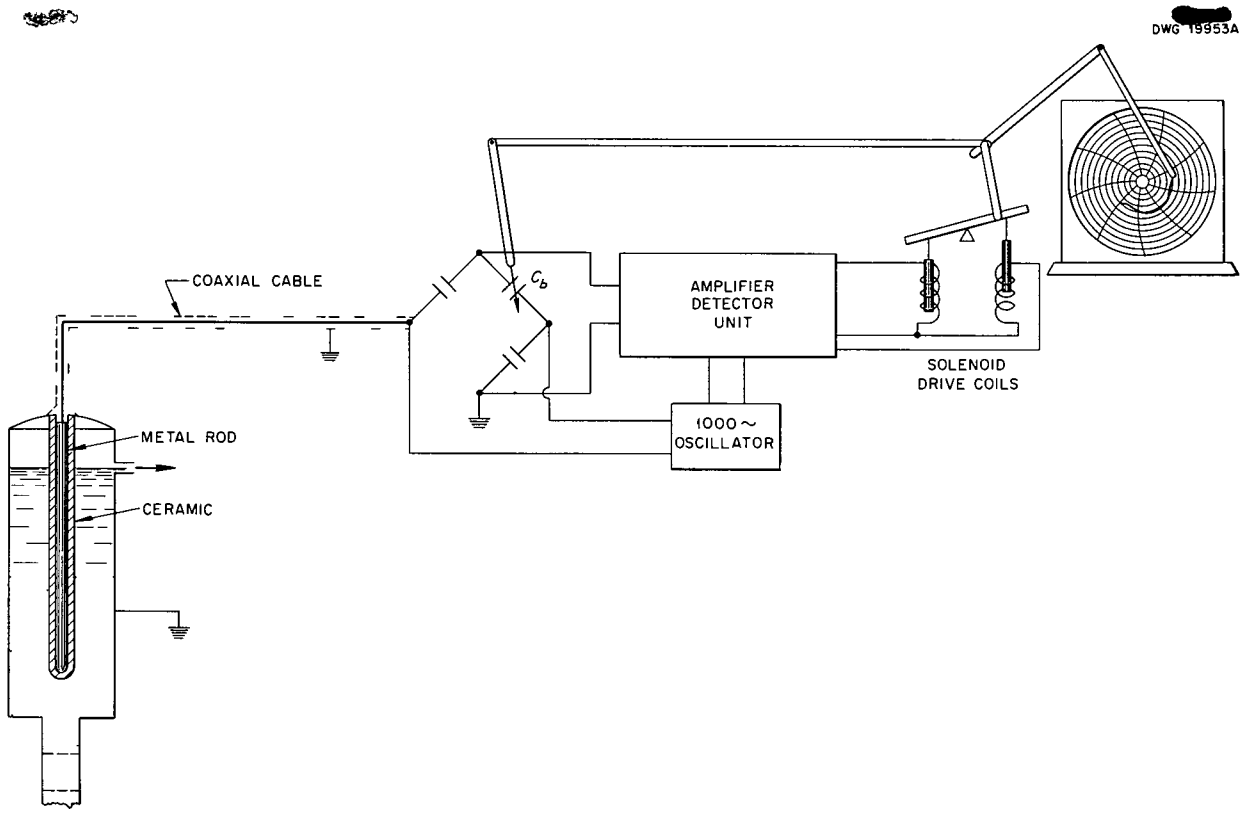

Fig 2 Interface Capacity Detector and Foxboro Dynalog

The principle of operation of this system is shown in Fig 2 The probe is connected to the input bridge circuit by coaxial cable and the bridge becomes unbalanced as the capacity at the probe changes The amplifier circuit detects the un balance and drives a pair of solenoids to position the capacitor C_b thereby re establishing the balance of the bridge The recording pen is also linked to the balancing solenoids and is positioned along with the capacitor The input circuit is quite versatile and if desired the total span of the recorder may be changed The zero reading of the instrument is easily suppressed upscale so that the fixed capacity resulting from long coaxial cable lengths to the probe is of no consequence

Initially the circuit was set up for a span of 150 $\mu\mu f$ this allowed full travel of the pen for interface travel of approximately 20 in when a pure organic phase and water were used At the time the instru ment was first operated it was not possible to make a regular Thorex run Subsequently a re cording was attempted for regularly scheduled A and B column runs With the span at 150 $\mu\mu f$ the 70 g/liter concentration of thorium in the organic phase in the A column lowered the dielectric strength of the organic phase to the point where no appreciable capacity change could be detected The B column run showed some capacity change but also indicated that a reduction of span was needed Since these runs were made the span has been reduced to 7 0 $\mu\mu f$, which should give successful operation on the B column and possible operation on the A column This reduction in span means an increase in sensitivity by a factor of approximately 20 It should be noted that these measurements have been made inside a glass column with the aqueous phase being grounded by a rather indirect route While the fixed capacity in a metal column will be higher a greater ef fective change in capacity will be realized as a result of the short ground path established directly to the metal wall of the column

Because of the amplification in the Foxboro circuit a simple method of pulse amplitude meas urement may be added to the interface detector

The mechanical balancing movement of the recorder has been damped to the point that it does not respond to the rapid pulse movement of the interface but only to the slower movement caused by a reduction or increase in feed or by complete withdrawal This not only gives better recording and control but also permits the use of a simple count rate type of circuit across the output tubes to provide indication of pulse amplitude

It is felt that additional experience on an actual Thorex run is needed Should it ever become desirable to operate with the interface at a substantial distance from the top of the column this type of measuring circuit would function as well as it does at the top of the column The pneumatic detectors are limited to the top of the column because it is necessary to bubble air into the system

The versatility and stability experienced with this type of capacity circuit indicate that it should find wide application for the measurement of liquid level and interface level If desired the recording instrument can be supplied complete with a standard pneumatic controller The fact that the measuring end of the circuit operates with no moving parts requires a minimum of space and requires only a single wire lead should enhance its use in many radiochemical plant applications

Pneumatic Detector for Pulse Amplitude

It is important for proper operation of a concatenated column to make sure that the generated pulse is reaching the final column section The presence of air or entrained gas within the column acts to absorb the pulse and to prevent its reaching the final sections Although certainly not probable it is nevertheless possible for air to enter the column in one of the feed streams from the pulse generator or through a pipe leak during the negative half cycle of the pulse Hence it is important that some indication or measure of pulse amplitude be provided in the last section and this measurement has been made in several ways In the first method described use was made of the interface instrument discussed in the previous section

The interface transmitter responds not only to the slow vertical travel of the interface but also to its short and continual vertical pulsing This pulse travel is normally a small (5% or less) portion of the total travel of the interface between probes However the transmitter does respond to it and the recording pen will move a few per cent of the chart scale in response to the change For a clean record this movement would normally be damped out at the recorder Advantage may be taken of the fact that the transmitter faithfully changes the output pressure in response to the interface pulsing If the change in output pressure can be measured as it occurs with each pulse and if this measurement can be made independent of the absolute level of pressure in the transmitter line a good indication of pulse amplitude will result

The indication of pulse amplitude has been accomplished by an arrangement as shown in Fig 1 The two stage check valve at point *A* allows that leg to catch the surge pressure or the top of the positive half cycle of the pulse The opposite set of check valves at point *B* catches the negative surge or peak A differential pressure transmitter is connected across these valves and reads the difference between maximum and minimum pressure which is proportional to the pulse amplitude A remote indicator or recorder may then be used to monitor directly the pulse amplitude A small crossover valve *C* is used to allow for slow equalization of the pressures should the pulse fall If this should occur the transmitter output pressure will drop to the minimum reading of 3 psig If desired a pressure switch may be incorporated in the transmitter line to provide a warning signal if the pulse should fail

Pulse Monitoring with an Oscilloscope

A method of viewing the actual pressure pulse wave on the screen of a cathode ray oscilloscope has been developed and used (Fig 3) The form of the wave is shown on the screen with a time base corresponding to the frequency of the pulse generator The amplitude of the wave as displayed is directly proportional to the amplitude at the point of measurement in the column

Measurement of pressure at the column is made by a Statham transducer These transducers embody small diaphragms or bellows for pressure measurement This actuating movement drives a small unbonded wire strain bridge to vary the electrical output as a function of pressure change A Sanborn model 140 strain gage amplifier has been used to energize the bridge and to amplify the signal before it is fed to the oscilloscope

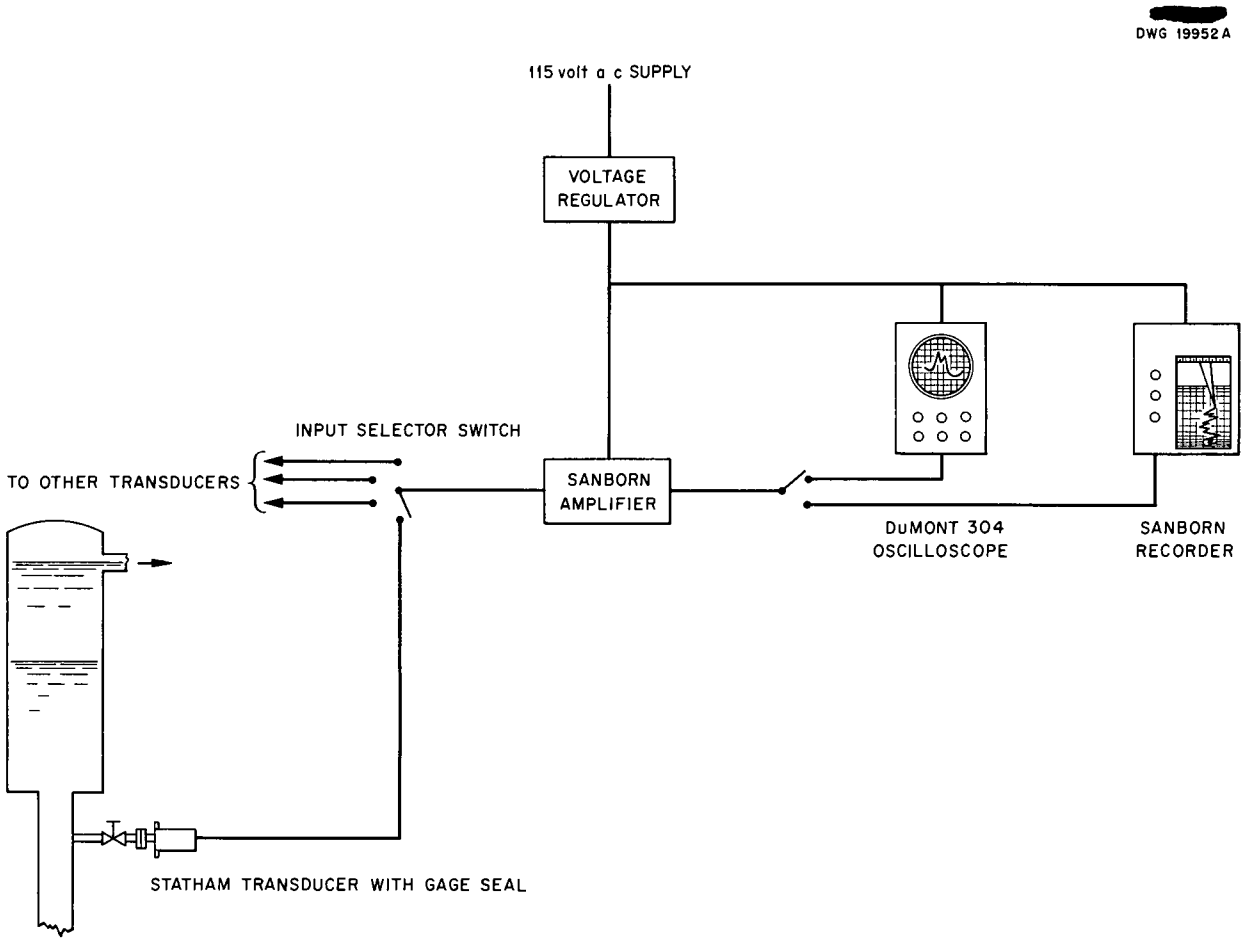

Fig 3 Pulse Monitoring System

The oscilloscope is a standard DuMont model 304 that has been equipped with a long persistence cathode ray tube The phosphor on the face of this tube is such that it will retain a record of the light beam for slightly more than 1 sec thus giving the operator a coherent picture of the pulse wave If a permanent record of the pulse wave is desired the signal from the amplifier may be switched from the oscilloscope to a direct writing Sanborn recorder

The system has provided a usable method of measuring pulse amplitude Also the ability to see the actual pulse wave may prove of value in analyzing the over all operation of the column By the use of an input selector switch a single amplifier and oscilloscope may be employed to monitor the output of several transducers The oscilloscope has been modified to allow the time sweep to be automatically determined by the frequency of the input signal, thus providing a system that would be of distinct value when monitoring two or more columns of different pulse frequencies

The transducer measuring elements are usually made of brass but they have been adapted to column service by using standard oil filled chemical gage seals of stainless steel The proper selection of a gage sealing fluid would be important in the pilot plant because of the radiation The transducers have only one or two parts made of plastic but even these parts can be eliminated or replaced with porcelain if the radiation level is to be high in the vicinity of the transducer

Flowmeters for Radioactive Liquids

Two flowmeters have been constructed for metering highly radioactive fluids Essentially these instruments are single variations of the orifice meter with some added safety features for

hot cell work Instruments of this same general description may be more familiar under such popular names as gravity feed orifices flower pots hooker cell flowmeters etc Basically they all consist of a head chamber or tank with an orifice in the bottom Since the downstream pressure on the orifice is always the same (atmospheric) the upstream pressure or liquid will be determined by the flow through the device

The unit shown in Fig 4 represents a refinement of the basic flowmeter The back pressure or liquid head is measured by a dip tube and the reading is transmitted to a remote recorder The inlet plate filter or sieve contains holes slightly smaller than the metering orifice so that any foreign particles will be caught before they can plug the metering orifice The overflow tubes prevent a stoppage of flow should the metering orifice become plugged or should the filter plate become abnormally loaded

These gravity meters have several drawbacks First they require that the pressure on the flowing stream be reduced to atmospheric or vent pressure at the point of measurement In many cases this is a piping inconvenience Column feed service would require that the meter be located several feet above the top of the column and that check valves be installed between the meter and the feed plate Without the check valves the high pulse pressure at the feed plate could cause a backup and overflow at the meter

Also there is a substantial holdup of the flowing fluid and the instrument has a relatively long response time to a change in inlet flow because of the holdup required Further like all low flow variable head and variable area meters the instrument is subject to a calibration shift with fluid viscosity change Despite these limitations however it is felt that these flowmeters represent about the most dependable arrangement for measuring the flow of highly radioactive liquids They have no moving parts and the transmission is simple and direct Some disappointing results have been experienced with currently available electromagnetic flowmeters and at this time it is felt that they are not capable of long periods of operation without some maintenance being required at the transmitting head

AUTOMATIC SEQUENCE CONTROLLER Q 1328 FOR ISOTHERMAL TRANSFORMATION EQUIPMENT – METALLURGY

J F Potts Jr

The automatic sequence control mechanism described is part of the over all instrumentation

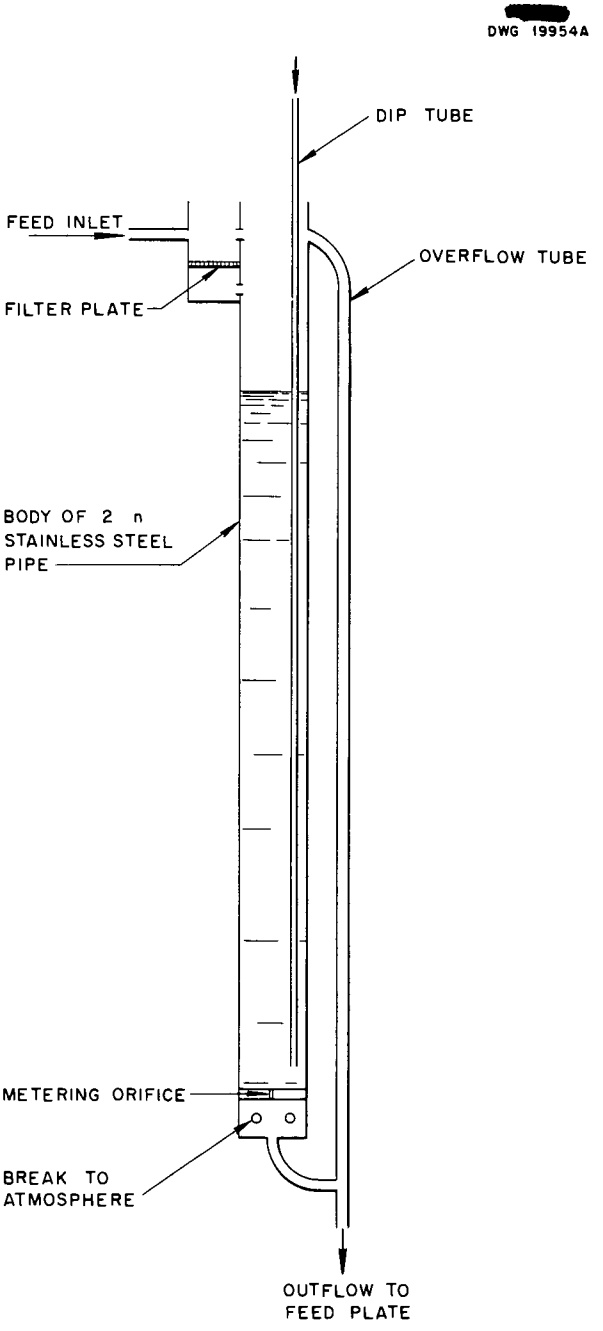

Fig 4 Gravity Feed Flowmeter

including temperature measurement and control that has been developed in connection with a refined transformation apparatus the prototype of which was constructed by Stansbury and Picklesimer of the University of Tennessee Front and top views of the controller are illustrated in Fig 5

The transformation equipment consists basically of two electrically heated lead baths and a water cooled mercury bath that are enclosed in an inert atmosphere Auxiliary solenoid plungers valves and control circuitry complete the assembly A metallurgical sample is immersed in the first lead bath which is at high temperature until the temperature of the sample attains the temperature of the bath The sample is then withdrawn from the bath and immersed in a second bath (the austenite pearlite transformation bath) which is maintained at a lower temperature After the sample has remained in the second bath for a prescribed time it is withdrawn indexed and immersed in the final mercury quenching bath

The sequence control with its auxiliary solenoid plungers and pressure vacuum solenoid valve automatically performs the above described sequence of operations After the austenitizing time is preset with a precision reset timer the start button is momentarily pressed to start the sequence The sample is immersed and withdrawn from the first bath as described above and is indexed to the austenite pearlite transformation bath At this point in the operation the control timer starts After the predetermined control time has elapsed the sample is automatically withdrawn and indexed to the mercury quenching bath and then the power to the apparatus is switched off

In addition to the primary components of this sequence controlling system there are several auxiliary relays stepping switches contactors and safety interlocks that prevent malfunction of or damage to the equipment during operation

Metallurgical samples have not as yet been processed however the assembly of the new apparatus has advanced sufficiently to indicate successful operation of the sequence controller

INSTRUMENTATION FOR THE REZEX PROCESS

T M Gayle

Design and operation of a Rezex continuous countercurrent ion exchange column are given elsewhere [2 3] A statement of the instrumentation requirements for a laboratory scale column is also given in another report [4] and with few modifications the instrumentation has followed the design as described

The extremely low flow rates encountered (of the order of ½ cc/min) in several of the streams precluded any simple method of flow metering and control The problem was further complicated by the requirement that all materials in contact with the process fluids be of glass plastic or tantalum It was decided that the critical feed streams would be pumped and controlled by small displacement pumps manufactured by the Milton Roy Company The bodies of these pumps will be of acrylic plastic and the piston plungers will be of tantalum Test runs with similar pumps indicated that this method of control metering offered the best chance of approaching the required accuracies Although it was desired that most of the flow rates be continuously recorded this was abandoned as being too costly and time consuming It was planned that indicating rotameters of all glass construction be used in series with feed pumps on the critical streams Circulation streams that require constant throttling in order to maintain liquid level or other variables are being controlled with tubing type pumps driven by variable speed d c motors

Differential pressure measurement and recording are desired for six points within the column in order to closely monitor the flow rates within the column itself All these measurements are in the low differential ranges with the majority being below 3 in of H_2O full scale No differential pressure transmitters could be obtained that were made of the desired materials Therefore it was decided that conventional units would be used with the exposed parts isolated from the process fluids by a carbon tetrachloride seal in each line This equipment is now being installed

Control of the direct current to the converter cell is obtained by the use of a 10 kva induction regulator inserted ahead of the rectifiers in the circuit Position of the induction regulator rotor is automatically controlled by a pneumatic motor operating

---

[2] S H Jury *A Survey of Rezex Ion Exchange Separation Process* ORNL CF 52 10 121 (Oct 1 1952)

[3] S H Jury *Design of Fractionation Percolators* ORNL CF 52 6 164 (June 26 1952)

[4] S H Jury *A Statement of Instrumentation Requirements fo a Laboratory Scale Rezex Column of the Continuous Countercurrent Variety* ORNL CF 53 2 195 (Feb 9 1953)

UNCLASSIFIED
PHOTO 10448

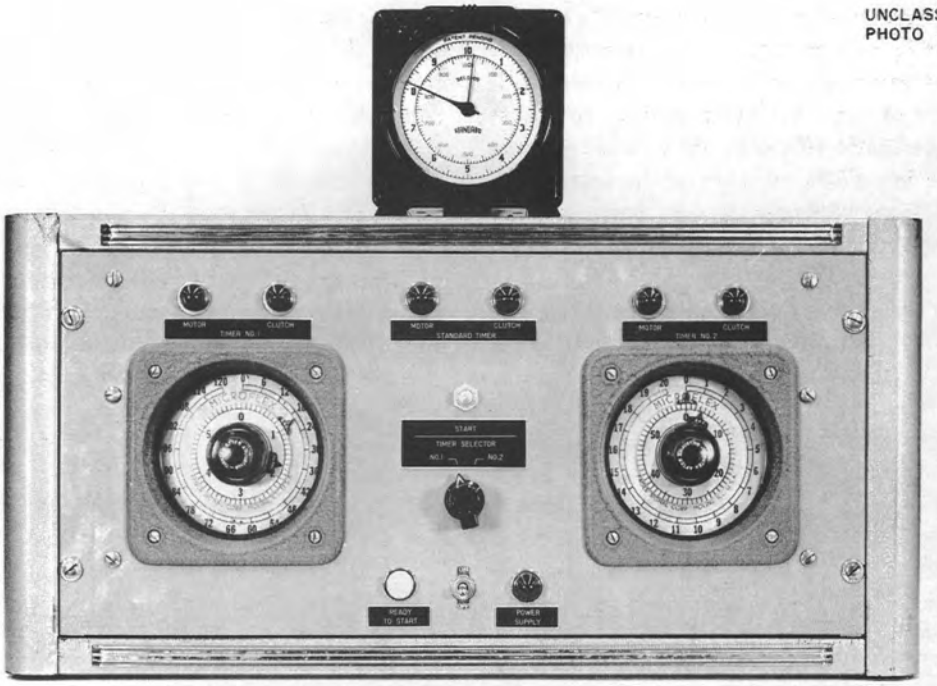

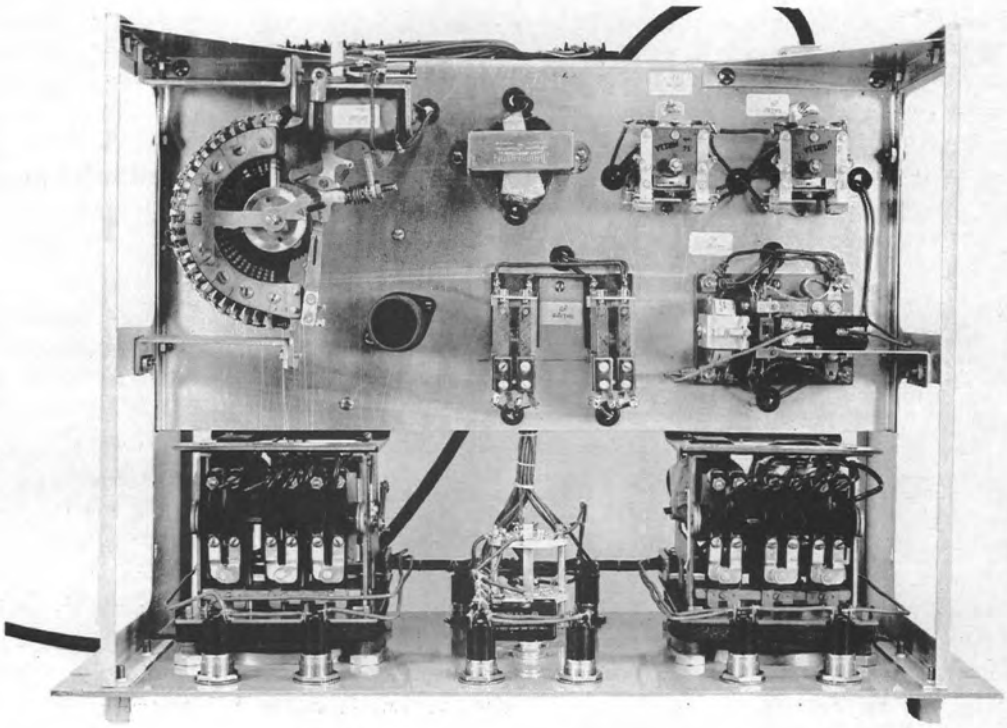

Fig. 5. Automatic Sequence Controller.

from a current recorder controller The set point of the controller is continuously adjusted by a gravity detector in the hydroxide side of the converter cell

Liquid level detection and transmission are initiated by the use of converter cells containing glass ball or acrylic plastic floats in the column These floats actuate integrally mounted slidewires which are used for level transmission or direct control of the pumping rate through the d c motors

INSTRUMENTATION FOR EXPERIMENTAL UNH DENITRATION STUDIES Q 1416

J F Potts Jr

The instrumentation for the denitration of UNH to UO_3 was developed and fabricated in support of the Purex Development program Briefly the purpose of the program was to determine the decontamination factors across the denitrating pot the effect of foaming on operations (for ascertaining the charge size limitation of the equipment) and in general the conditions causing bad batches of dry powder As supplied the UNH or $UO_2(NO_3)_2$ is in a 2 *N* acid solution This solution is dumped into a tank electrically heated and continuously agitated The water of solution is then boiled off leaving $UO_2(NO_3)_2\ 6H_2O$ In the next two stages the water of crystallization in the nitrate is boiled off leaving UO_3 as a dry powder The volatile components are boiled off and absorbed in water then collected in a catch tank

Instrumentation for the denitration process was installed on a 78 × 48 in panel The panel consists of two 24 in box frames on which are mounted either 24 × 26 in or 24 × 13 in (standard size) panel sections This unit panel construction was particularly attractive for the program because of the temporary nature of the setup it has maximum salvage value and still retains maximum utility Instrumentation included in this design consists of manual control and visual monitoring of energy to the two heaters on the digestion pot Protection to the heaters was supplied by both magnetic blowout breakers and shell temperature limit controls in which a Simplytrol Pyrometer was used which later was utilized as either a limit control or an on off temperature control The agitator consists of a motor a speed reducer and agitator paddles The motor starter and protection unit along with power and speed indicators are panel mounted The speed indicator is a single phase 6 pole tachometer generator that feeds into a linearizing resistance capacity rectifying network which drives a D Arsonval movement Two of the three rotameters on the panel indicate the flow rate of cooling water to the condensers and the third indicates water flow to the absorber This flow is throttled by panel mounted valves A U tube manometer is also included in this section to indicate the digestion tank pressure Two multipoint strip chart temperature recorders complete the installation Standard conduit and piping are used with the exception of the protective coverings for the thermocouples which are individually encased in ¼ in Tygon tubing These tubes terminate into bundles at the exit of the Unit Operations test cell (Cell I B Bldg 4505) This method of thermocouple protection has proved to be quite satisfactory for this type of installation While affording adequate protection against corrosion and mechanical damage the method allows the changes which frequently occur in an experimental setup to be made quickly and easily

Approximately ten runs have been made with this instrumentation and they have been paralleled with runs made on a model that is considerably scaled down and that has the very minimum of instrumentation

PRECISE CONSTANT TEMPERATURE CONTROLLER FOR METAL BLOCK FURNACE

J F Potts Jr

It was undertaken to develop a constant temperature environment for high pressure bombs used in corrosion studies wherein pressure change is a measure of oxidation rate Because of the thermodynamic properties of saturated steam at 250°C a change of 1°C is accompanied by a pressure change of 10 psi This is of the order of or greater than changes due to oxidation therefore precise temperature control is desired

The first problem encountered in evaluating a precise control system was that of devising a means for recording temperature change with a high degree of sensitivity over 24 hr periods This was accomplished in the following manner An iron constantan thermocouple with an ice bath reference junction was employed with the thermocouple emf suppressed to within 50 μv by a precision potentiometer The difference signal was

then fed to a Leeds and Northrup microvolt amplifier the output of which drove a 10 mv potentiometer recorder (14% accuracy) It was found that the drift of the working battery of the portable potentiometer was excessive After several constant voltage supplies were tried it was decided to use a servo standardized supply (the Q 1489 continuously standardized precision potentiometer which is discussed in the following section) in place of the dry cell This supply maintained the suppression voltage to within an effective temperature change of 0 005°C during an ambient temperature change of 2°C

The initial developmental specification indicated that the controller should require no frequent periodic maintenance or standardization and that a record was not necessary This immediately suggested a Wheatstone bridge (resistance bulb) detector and a time proportioning control One such readily available controller that proved to be quite satisfactory was a Leeds and Northrup Electromax temperature signalling controller for duration adjusting type control (Leeds and Northrup catalog No 6245)

The initial controller tests were run using a prototype furnace made of copper bar stock approximately 2½ in in length and 1 in in diameter which was wound with insulated wire in a manner similar to the furnace which was to be controlled Resistance elements employed were the Baldwin Lima Hamilton type T 14 and TB 14 bonded gages The results indicated that the Electromax controller was adequate but that the type T 14 gage could be relied on only up to 150°C (ultimate temperature of 200°C) whereas the reliable range of the TB 14 extended to 200°C (ultimate temperature of 275°C)

The final furnace to be used was an aluminum block furnace measuring 4½ in in diameter and 20 in long which was rewound with nickel wire insulated with ⅛ in refractory beads because the original nickel ribbon Sauereisen insulated winding had enough leakage to interfere with the operation of the a c Wheatstone bridge controller The resistance element was an Edison Splitdorf bulb with the protective tube removed A hole was bored in the furnace bottom to accommodate the element thus the time delay of the temperature measurements was reduced

This system as it is presently operating controls the temperature to within 0 1°C over a 24 hr period and to within about 0 01°C over intervals of the order of ½ hr It is possible to improve the long time stability by controlling the temperature of the Electromax case by a thermostat and by making some minor changes in the a c Wheatstone bridge circuit However this has not yet been necessary

For pressure measurement in high pressure corrosion studies there are a number of bombs included in the subject furnace to which are connected strain gage pressure transducers These transducers are supplied from a constant voltage d c supply (similar to Q 1489) and provision is made, through selector switches to measure the emf to the pressure cells the respective emf outputs and the emf of the thermocouples attached to the bombs all with a type K 2 precision potentiometer The pressure transducers are contained in a thermostatically regulated box and the ambient temperature variation is slight which greatly facilitates determination of small pressure changes at a working pressure of 1000 psi

CONTINUOUSLY STANDARDIZING PRECISION POTENTIOMETER Q 1489

J F Potts Jr

A source of suppression voltage that was versatile reliable and accurate and that had a high degree of effective sensitivity was needed in order to control and/or record electrical or electrically transduced quantities to very close tolerances Although the continuously standardizing precision potentiometer was built to fulfill special needs it can be adapted with minor modifications for a variety of similar uses Examples of such applications are as follows

1 The instrument can be used to record voltage variations at 2 v to within 0 01% where the energy supplied to an adiabatic calorimeter is to be accurately measured This is accomplished by supplying a constant current to the calorimeter sample heater suppressing the voltage drop across the heater resistance to within 20 mv with the subject potentiometer and recording the residual on a 20 mv potentiometer recorder the product of the time interval and the average voltage is thus proportional to the energy supplied

2 The potentiometer will give precise temperature control (within 0 05°C) over a wide range of temperature by using a thermocouple as a primary element This thermocouple feeds a narrow span

potentiometer controller that is connected in series with the subject potentiometer Figure 6 is a circuit diagram of the device and Fig 7 shows the panel and chassis layout

The ideas used in the potentiometer are well established and the only novel features are the accuracy and resolution obtained with a continuous balance circuit The sustained error of the potentiometer is within ±0 015% or 50 μv whichever is greater and the balance and reading resolution is within ±0 005% or 50 μv whichever is greater The standard cell emf is known to within 0 01% The same principle has been used to supply constant current to within 0 05% by placing the standard resistance in series with the servo resistance and the load – varying the standard resistance to vary the current setting

Such accuracy was made possible by the careful selection of components with respect to mechanical and thermal stability together with a choice of a circuit which although it does not lend itself to applications where current drain is required does tend to compensate automatically for ambient variations This compensation is accomplished by making the greater part of the voltage that is compared with the standard cell emf a part of the potentiometer output circuit By not breaking the potentiometer resistance string any effect of contact variations is precluded

The device is inherently a slow servo and it will not correct for changes greater than 0 1 v/min The slow servo motor speed was deliberately chosen so that when the potentiometer was working into a fast null balance recorder or controller the recorder would balance before the potentiometer could be materially upset

COLOR COMPARATOR FOR THE ALLOYS DEVELOPMENT PROGRAM

C G Heisig[5]

A color comparator for the detection of water in PDA was developed for the Materials Chemistry Division s Alloys Development Program In this method the PDA that contained small amounts of water was circulated through a bed of granular calcium carbide Acetylene generated by the water carbide reaction was diffused through a fritted glass filter into a potassium permanganate solution which was decolorized in proportion to the amount of acetylene generated A light beam

[5]Now located at Carbide and Carbon Chemicals Company South Charleston West Virginia

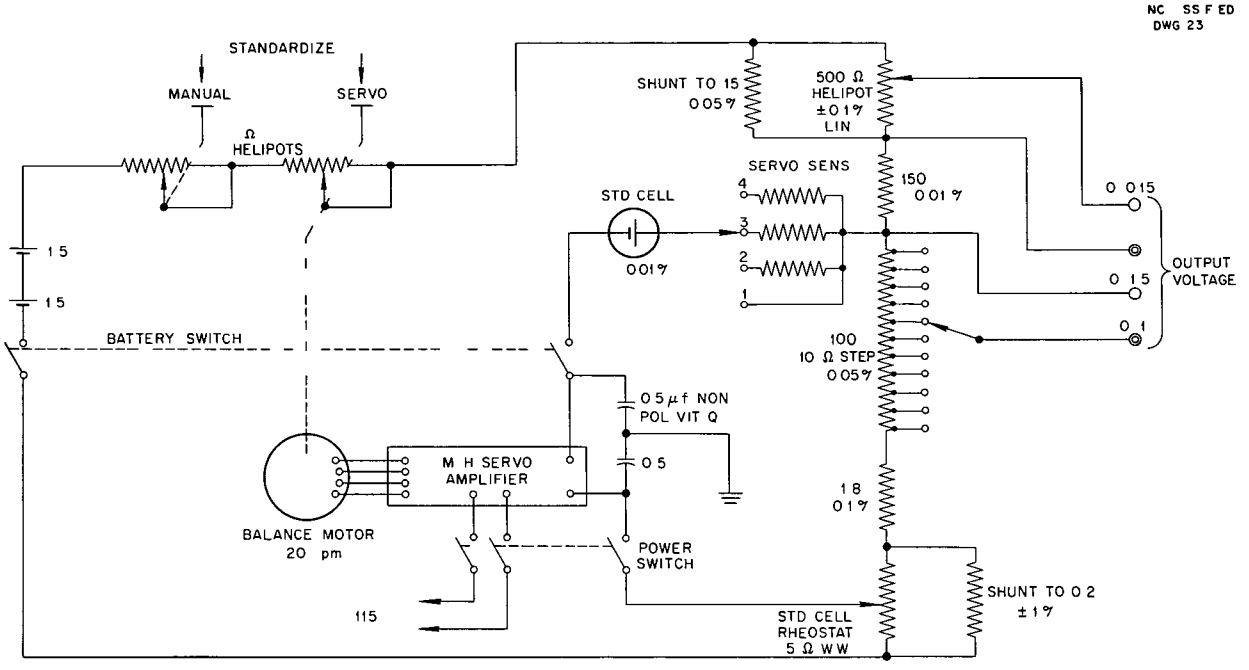

Fig 6 Circuit Diagram of Continuously Standardizing Potentiometer

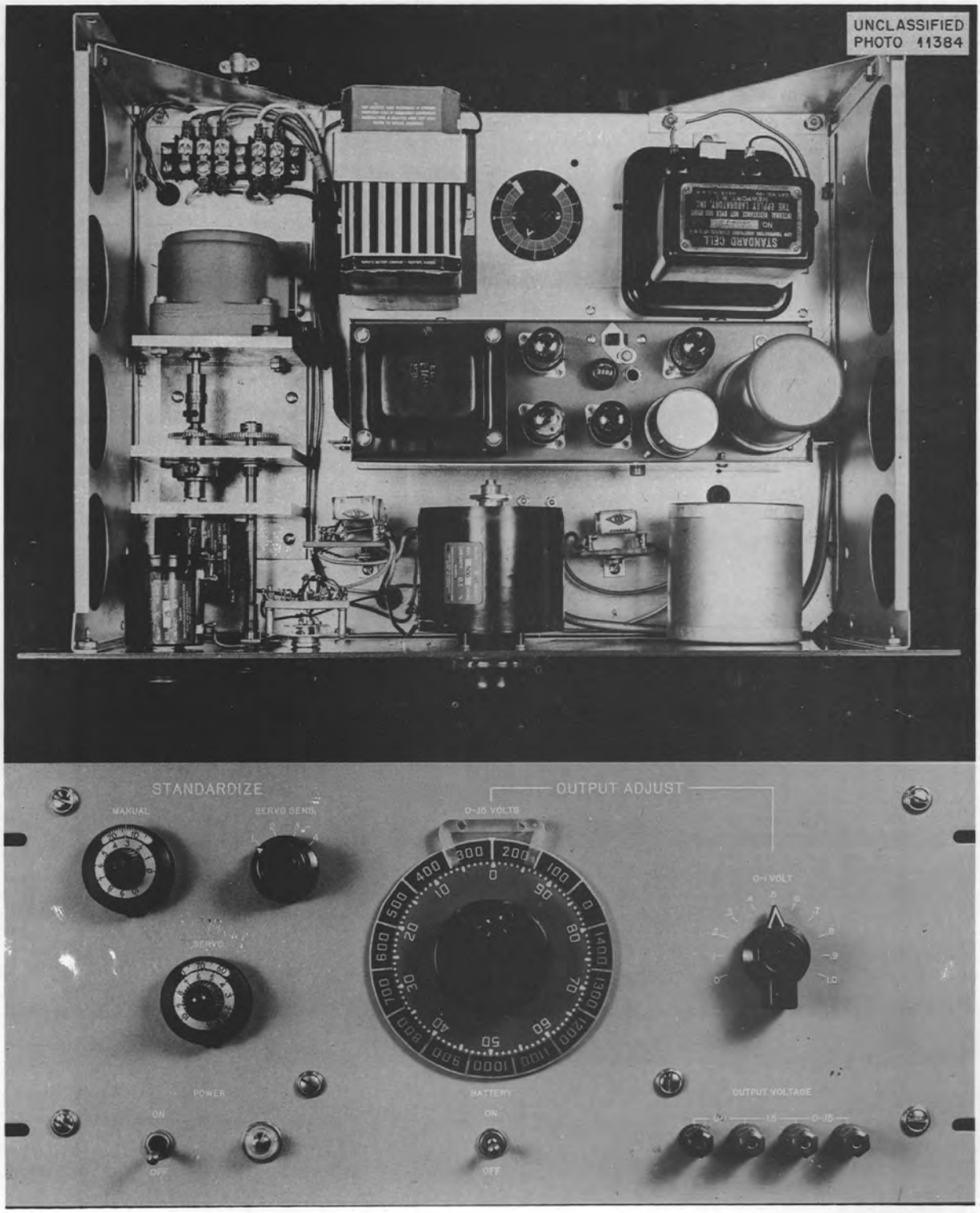

Fig. 7. Panel and Chassis of Continuously Standardizing Potentiometer.

was passed through the unknown permanganate solution and a second beam was passed through a permanganate solution of known concentration The transmitted beams were used to energize two photoelectric cells whose outputs were fed to two Welch Manufacturing Company Densichrons (Drawing No 2150 Catalogue No 3830A ASI) which served as amplifiers

Removal of water from the PDA was considered to be complete when no further change in the color of the permanganate solution was recorded on a strip chart recorder The recorder was actuated by the Densichron amplifiers through a circuit de signed to measure the ratio of the outputs of the two Densichrons to provide a signal for driving the null balance recorder (Fig 8) The Densichrons serve as the photoelectric cell amplifiers of a double beam light spectrophotometer

The input voltage of the color comparator is approximately 14 v rms for 1 ma current through the slidewire of the recorder The output signals of the two Densichrons are stepped down by 3 1 interstage transformers and are rectified by two 1N63 crystal diodes The rectified voltage from

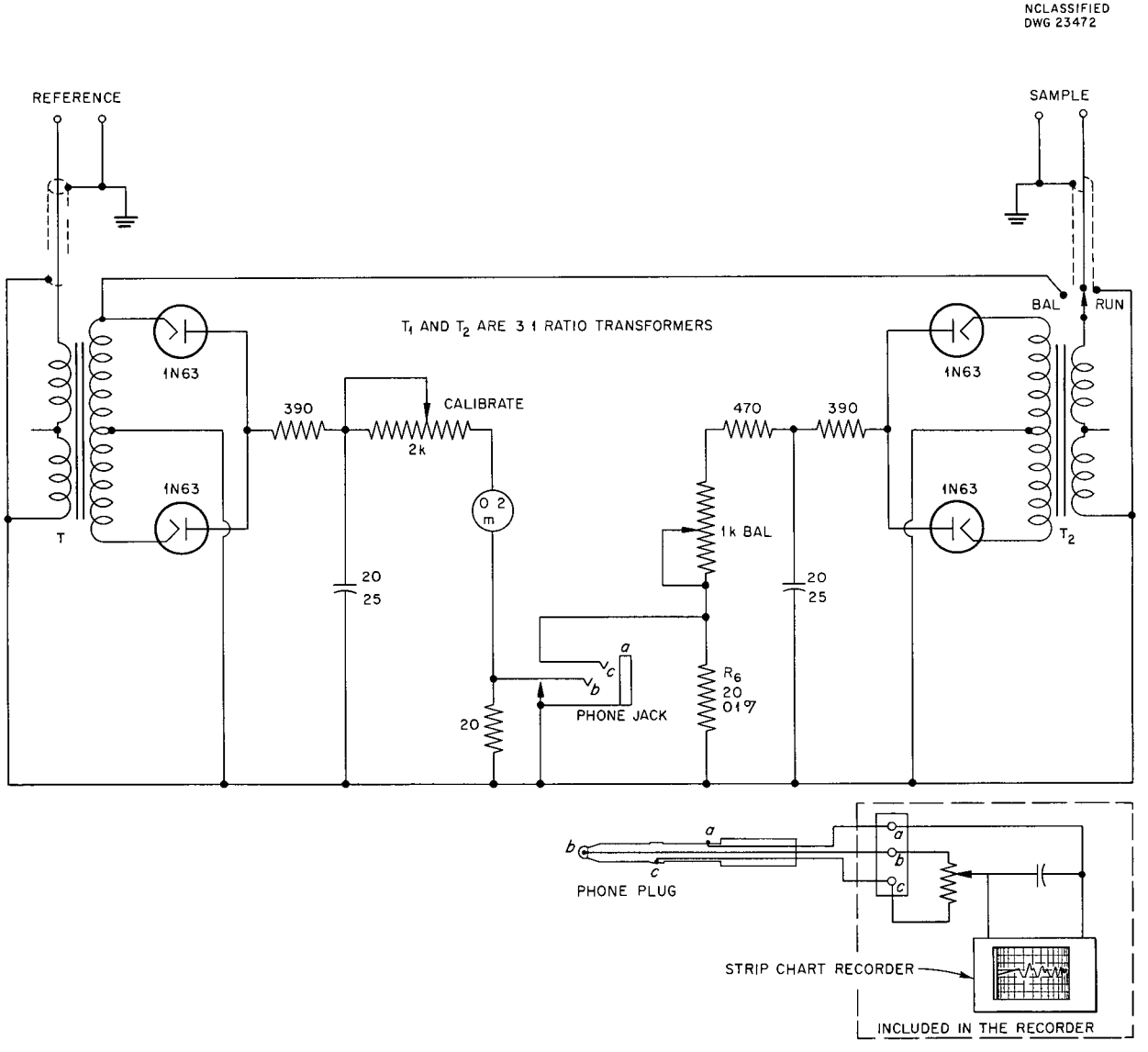

Fig 8 Circuit Diagram of Color Comparator

the reference Densichron is then applied across the slidewire of the recorder At the same time a d c signal from the other Densichron is applied across a 20 ohm fixed resistor (R_6) The recorder amplifier detects the unbalance existing between these two voltages and positions the wiper of the recorder slidewire until the voltage at the wiper equals the voltage across the 20 ohm resistor In this manner the recorder compares the output from the two Densichrons and indicates the color difference between the reference and the sample When the recorder indicates no further color change acetylene is no longer being generated and the PDA is assumed to be dry Hence no attempt has been made to record absolute units

THOREX PILOT PLANT INSTRUMENTATION

W J Greter

The instrumentation for the Building 3019 Thorex pilot plant has been selected so that the direct measurements of radioactive material will be physically isolated from the operating personnel Component instrumentation using transmitters and remote receivers will provide the degree of isolation required

The transmitters necessary for liquid level specific gravity interface off gas pressure and associated variables will be located on the cell roof This location provides a minimum of 15 ft of elevation above the contaminated equipment and also minimizes any accidental carryover of contaminated material to the instruments Additional protection is provided by an air purge system at the transmitters with air purge flow directed toward the process The only connection to the receiver will be the tubing that carries instrument air at 3 to 15 psi pressure

The design fabrication and installation of the transmitter rack are complete

A work area between the cells and the control room will isolate the central control panel board from the contaminated area All receivers will be located on the panel for measurements of variables required for operation of the process The panel will be approximately 30 ft long and will contain all the necessary components for remote control of the process Design and layout of the panel is complete

Miniature instrumentation was required because of the limitation of panel board size The instrumentation consists of both single and two pen recorders and indicators that will indicate liquid level specific gravity and pressure variables However a number of large instruments will be required for recording and controlling temperature conductivity pH flow capacitance and radiation

A comprehensive survey was made to determine the type and location of remote service valves required A decision was made to use solenoid valves for all air sparging and three way pneumatic valves for jacket steam water service and steam jet transfer service These valves will be located on a wall of the cell off gas roof deck thereby reducing the danger of contamination of the valves

CIRCUIT DEVELOPMENT SECTION

LINEAR COUNT RATE METER Q 1451

F M Glass

The need for a more versatile and accurate linear count rate meter brought about the design of instrument Q 1451 This count rate meter has an accuracy of 1% of full scale and covers ranges from 100 to 1×10^6 counts/min in 10 ranges it is linear to 0 25% over its entire range A scale expansion control (Fig 9) permits adjustment of each selected range by any factor up to 2 The long term stability of the device is less than 0 5% drift in 24 hr A panel mounted selector switch provides three different integrating time constants representing 0 6 1 9 and 6% of standard deviation The discriminator has adjustable pulse height selection from −10 to +20 v The resolving time of the instrument is 3 5 μsec

In its present design the Q 1451 will drive directly any standard 10-mv or 1 ma recorder with no modifications to the circuit It also contains a built in calibration check using the 60-cps line frequency to produce a 120-cps signal as a standard The scale expander makes calibration adjustments possible from the front panel (Fig 10) without an external signal generator or other calibration source Also included in the design is a 1 Mc band width linear amplifier having a gain of 2000 When used with an A1 A preamplifier this device has an input sensitivity of 100 μv and a dynamic range of 250

The instrument is equipped with an external alarm and control unit (Fig 11) that allows it to be used as an alarm or control device as well as a monitor The external control unit connects to the main chassis by means of a cable and is disconnected when not in use

PREAMPLIFIER FOR ELECTRON ATTACHMENT STUDIES Q 1458

W T Adams

The preamplifier for electron attachment studies was designea for the amplification of pulses from

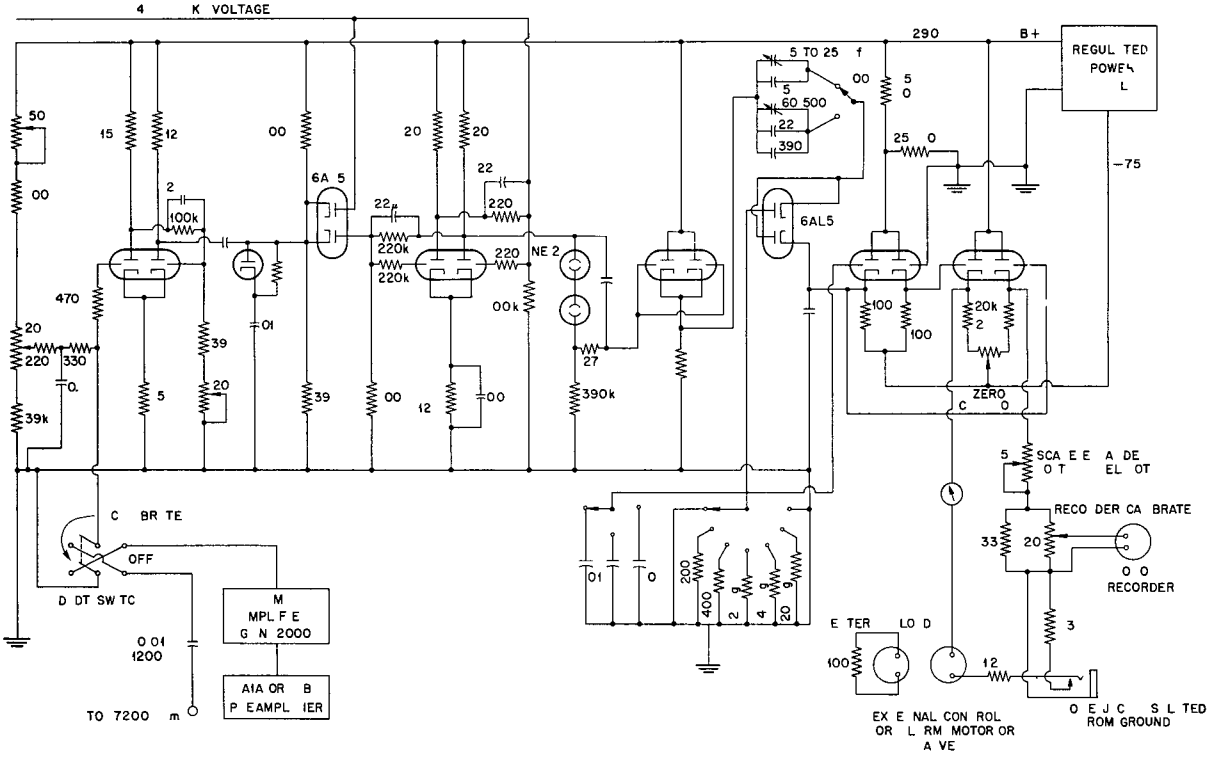

Fig 9 Circuit Diagram of Linear Count Rate Meter

UNCLASSIFIED
PHOTO 11597

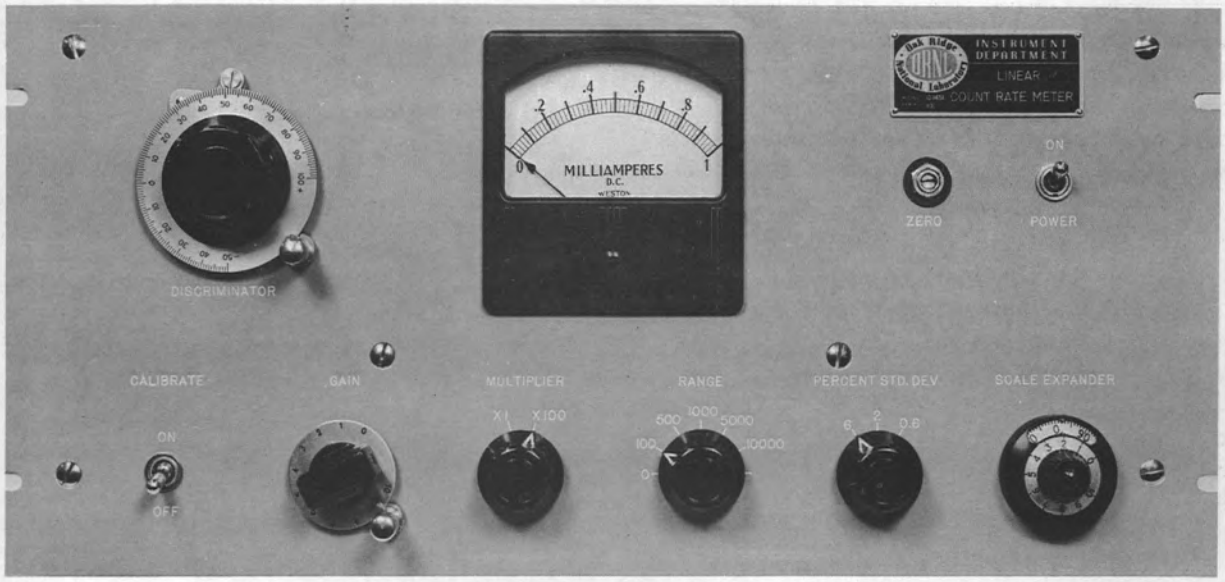

Fig. 10. Panel View of Linear Count-Rate Meter.

UNCLASSIFIED
PHOTO 11592

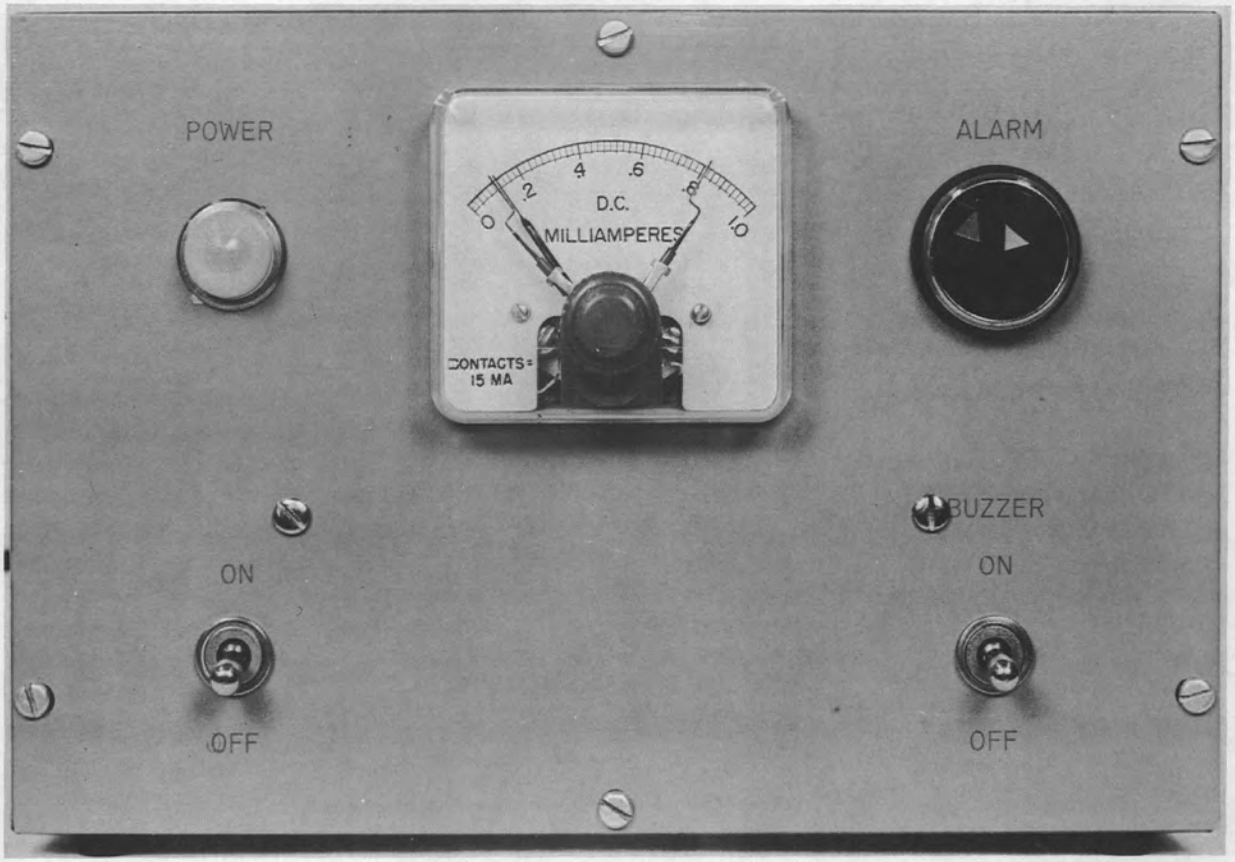

Fig. 11. Panel View of Alarm and Control Unit.

a special ionization chamber The design requirements made it necessary for the preamplifier to possess both good low frequency response and fast rise time characteristics in order to preserve the shape of sharply rising broad topped pulses

Typical characteristics of the Q 1458 preamplifier are as follows

Frequency response (+0)	−3 db from 2 cps to 2.5×10^6 cps
Rise time (10 to 90%)	0.1 μsec
Dynamic range	to 4 v output
Gain	40
Feedback ratio	10 to 1
Noise level	25 μv

The circuit (Fig 12) consists of a two stage direct coupled feedback amplifier in which type

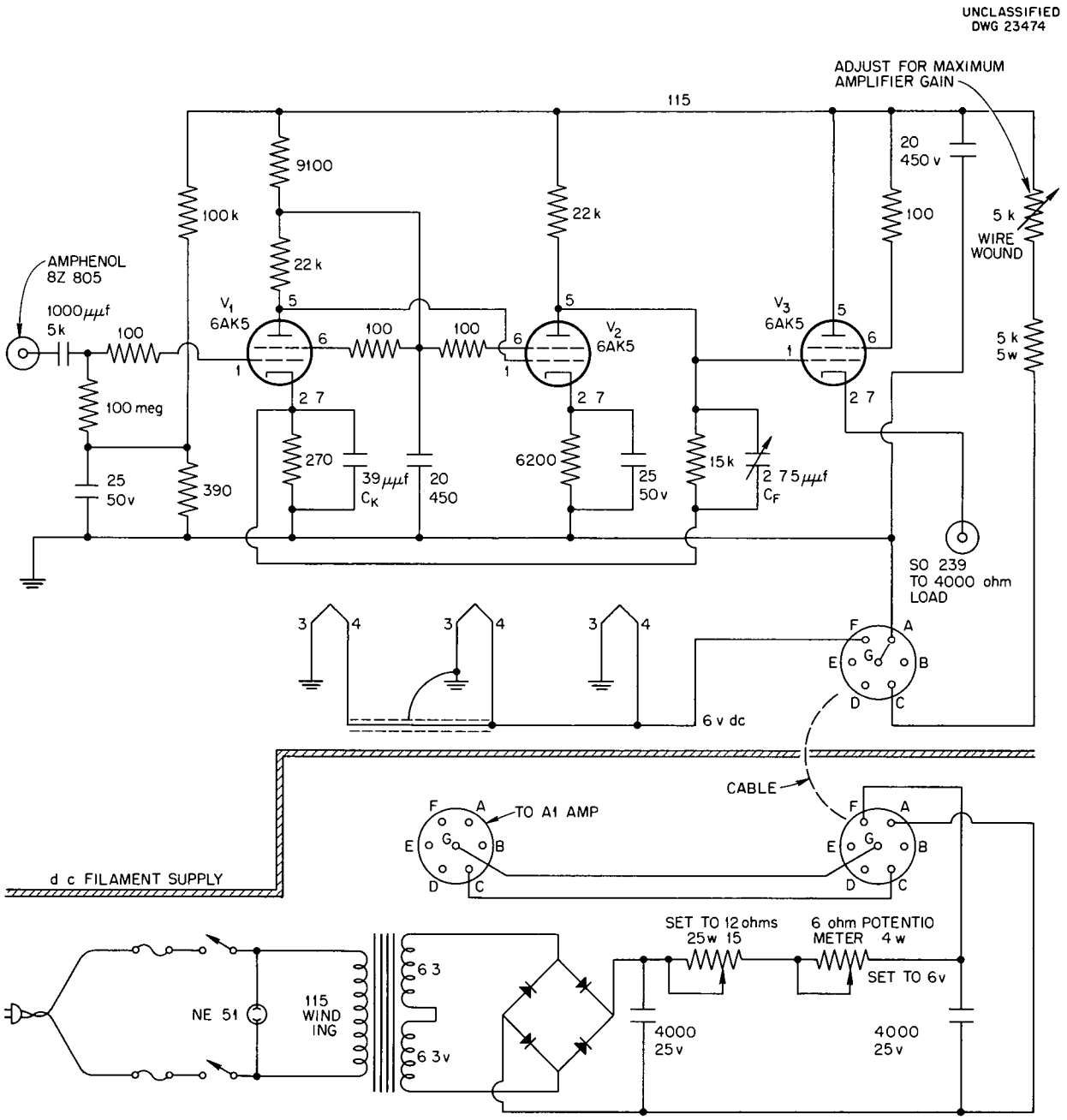

Fig 12 Circuit Diagram of Q 1458 Preamplifier

6AK5 tubes operating with low plate to cathode voltage (15 v) are used in order to maintain d c levels at reasonable values By keeping the screens of the tubes high (75 v) the G_m is still approximately 2000 μmhos The filaments are d c heated to minimize noise The $B+$ supply may be adjusted to the point at which the circuit has maximum gain for any given filament voltage At this operating point the gain is independent of $B+$ and filament variations over a limited range The output stage is a cathode follower feeding approximately 8 ma of direct current into 4000 ohms resistance The preamplifier requires 265 v $B+$ from the A1 amplifier In order to provide the proper load R_2 in the A1 should be changed to 3000 ohms

Listed in Table 1 are approximate voltages on the tubes with the filaments set at 6 v and $B+$ adjusted for maximum gain

Figure 13 shows the low frequency response of the amplifier The ultimate decrease in gain at extremely low frequencies is due to the coupling capacity at the input

TABLE 1 TUBE VOLTAGES

	APPROXIMATE VOLTAGE ON TUBES		
	V_1	V_2	V_3
Plate	17	33	120
Screen	75	75	120
Grid	0 5	17	33
Cathode	1 6	18 5	34 0

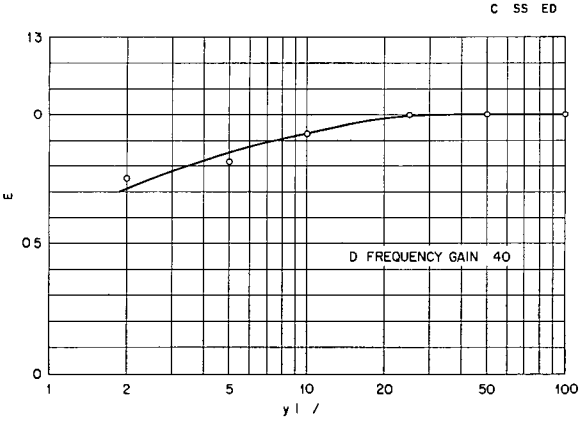

Fig 13 Low Frequency Response Curves of Q 1458 Preamplifier

The high frequency response is shown in Fig 14 Curves for three different values of the feedback capacitor C_F are illustrated The curve obtained when C_F was adjusted for minimum overshoot falls off approximately 6 db per octave Figure 15 shows the form of the output pulse when a negative pulse from a precision pulser is applied to the input

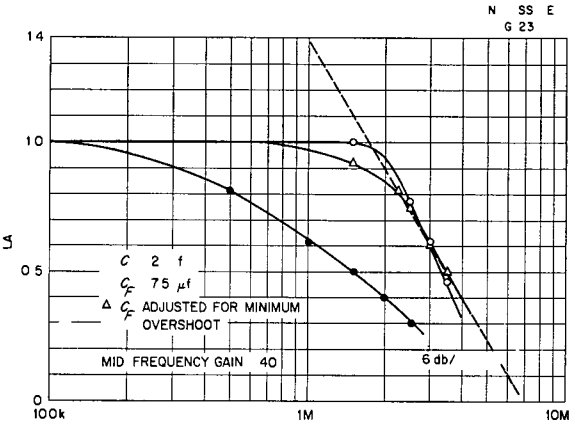

Fig 14 High Frequency Response Curves of Q 1458 Preamplifier

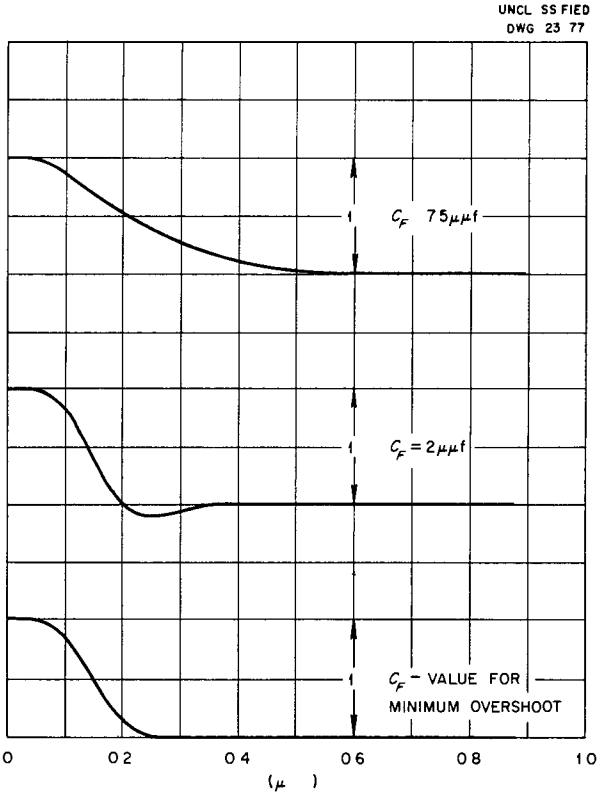

Fig 15 Curves of Response of Q 1458 Preamplifier to a Negative Pulse

These pulse shapes for various values of the feed back capacitor C_F may be compared with the corresponding frequency response curves in Fig 14

The variation in gain as a function of $B+$ voltage is shown in Fig 16 As mentioned above the operating point is the point of maximum gain at which the rate of change of gain with $B+$ voltage is zero

RESIN COLUMN SCANNER Q 1488

W T Adams

The Q 1488 scanner is a level indicating instrument for radioactivity measurement in which the radioactivity is made a function of the vertical position of a specially designed scanning head consisting of two radiation detectors mounted on a movable carriage The mechanical design is similar to previously constructed scanners Either of the two detectors a proportional counter or a scintillation counter may be used at a time Switching from one detector to the other merely involves interchanging the two connecting cables to the units A resistance network which is ineffective when the proportional counter is connected is used to reduce the high voltage when the scintillation counter is connected A scale factor of 0 3 is applied to the high voltage panel meter when the scintillation counter is used Identical preamplifiers are associated with the two counters The cable from the preamplifier of the detector that is in operation leads to an A1 linear amplifier mounted in a relay rack panel along with the power supply unit Figure 17 is a front panel view of the instrument

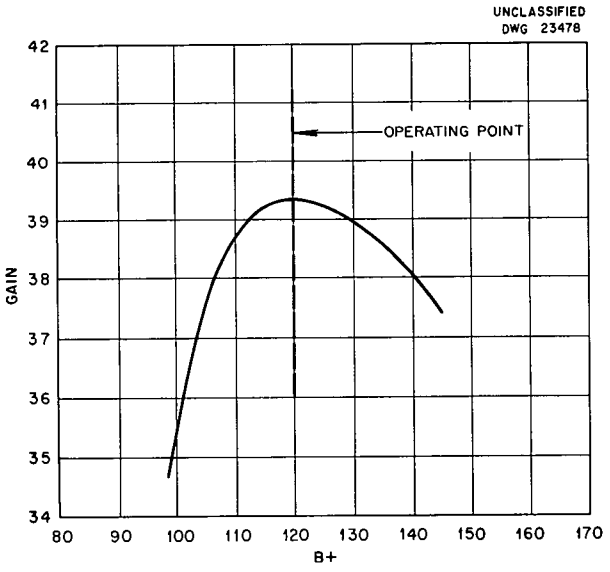

Fig 16 Gain Characteristics of Q 1458 Preamplifier

The output of the A1 amplifier is fed to a logarithmic count rate meter The counting rate is read on both the panel meter and a Brown strip chart recorder The range of the count rate meter is 10 to 10^6 counts/min The meter scale covers all five decades but the range of the recorder may be any one two three or four decades or it may cover all five decades if desired Since the recorder chart drive is synchronized with the carriage speed by a selsyn drive mechanism peaks of radioactivity may be precisely located

The carriage motion can be reversed by means of a solenoid operated bidirectional differential drive mechanism The latch type relay that operates the reversing solenoids is actuated by microswitches that have adjustable positions The reversing relay stops the recorder chart and also shorts the recorder amplifier input when the carriage is moving upward hence the data presented on the chart represent consecutive downward scans only

SWITCHING PULSE AND AUXILIARY GATE OFF CIRCUIT

W T Adams

An addition to the neutron time of flight spectrometer Q 1064 has been developed which provides two distinct functions greater channel widths for the spectrometer and an auxiliary gate off pulse for stopping the switching pulse oscillator after switching through all 84 channels of the spectrometer The switching pulse scaler which performs the first function and the auxiliary gate-off circuit which performs the second function are both built on a single chassis together with a common power supply The switching pulse scaler consists of a scale of 8 with provisions for operating as a scale of 4 or as a scale of 2 The negative switching pulses are fed to this scaler In this manner any of the standard channel widths (4 8 12 16 20 and 24 μsec) may be multiplied by a factor of 2 4 or 8 No changes are required in the control and test panel unit A double cathode follower cable driver follows the scale of 8 so that the unit may

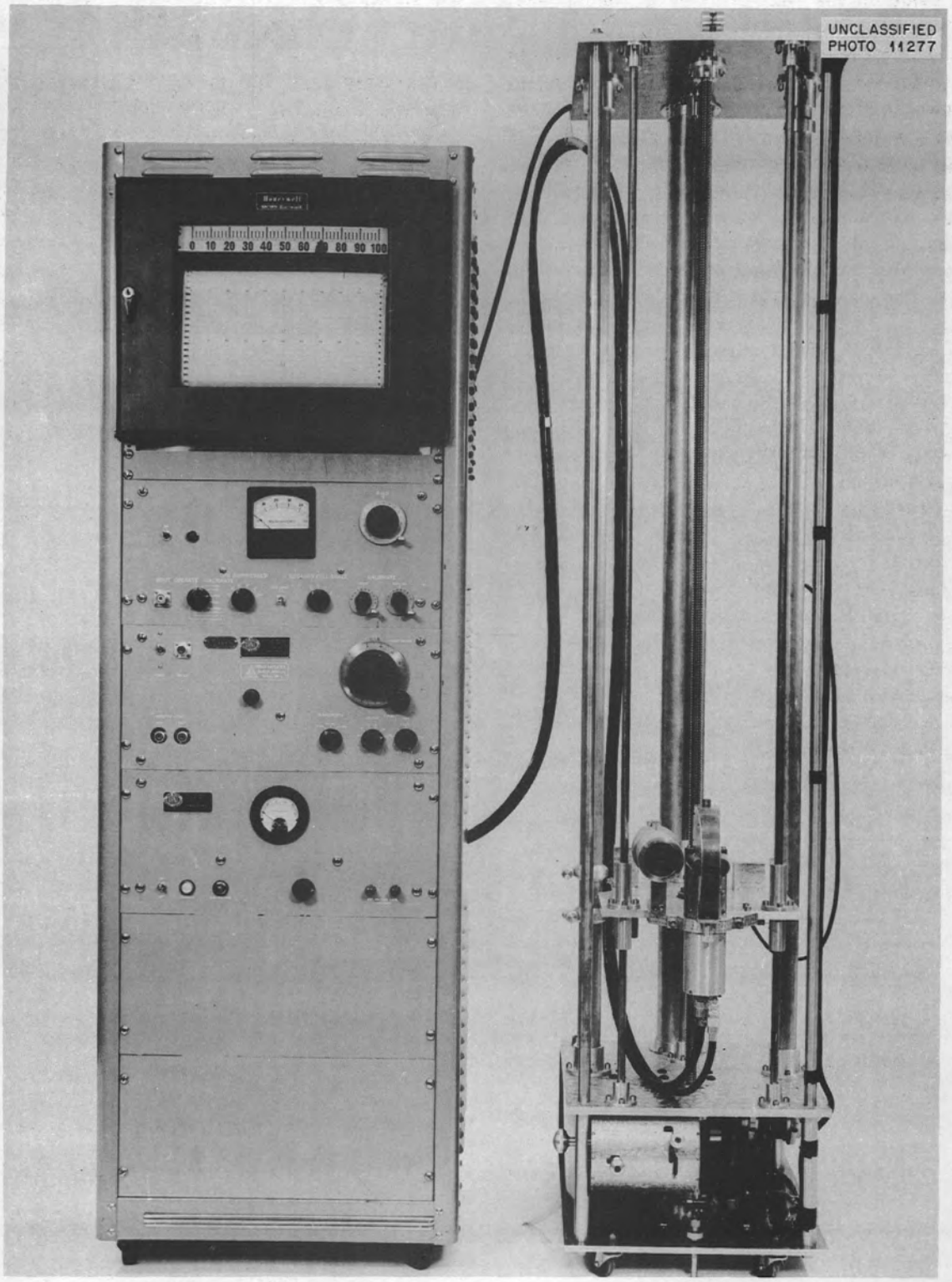

Fig. 17. Control Panel and Scanner Unit.

be inserted in the line from the switching pulse output of the control and test panel

The gate-off pulse which turns off the switching pulse oscillator is ordinarily supplied by a photo tube circuit associated with the rotor in the same way as the gate on signal but displaced about 90 channel widths later in time Ninety six channel widths were selected for the delay time between the gate on and the auxiliary gate off pulse This is somewhat more than the number of spectrometer channels (84) and is obtained easily with scaling circuits The auxiliary gate off circuit consists of a scale of 96 whose input is connected to the switching pulse scaler output The scale of 96 consists of a conventional scale of 32 plus a scale of 3 The scale of 3 is a scale of 4 with feedback such that the first scaling pair is held inoperative while the third pulse triggers the second scaling pair back to its normal state The output is differentiated and the negative pulses are removed and the remaining positive pulses which are 96 channel widths apart are fed through a cable to the gate off terminal on the control and test panel

AN a c OPERATED FEEDBACK ELECTROMETER

W G James

The need for a faster and more versatile a c operated electrometer led to the design of this instrument The circuit consists of an electrometer type of input pentode tube driving a cathode follower with a large portion of the cathode follower output fed back to the low end of the input resistor (Fig 18)

An additional pentode and cathode follower is employed in the circuit to obtain balanced operation which adds to the over all stability of the device

The power supply is a standard full wave vacuum diode rectifier type employing V R tube regulation A time delay relay provides a means for delaying the plate and screen voltage until the filaments are heated

The application of negative feedback in this instrument results in a response speed increase of a factor of 50 or more This permits the use of longer cables between the detector and the electrometer or allows faster response for any given cable length

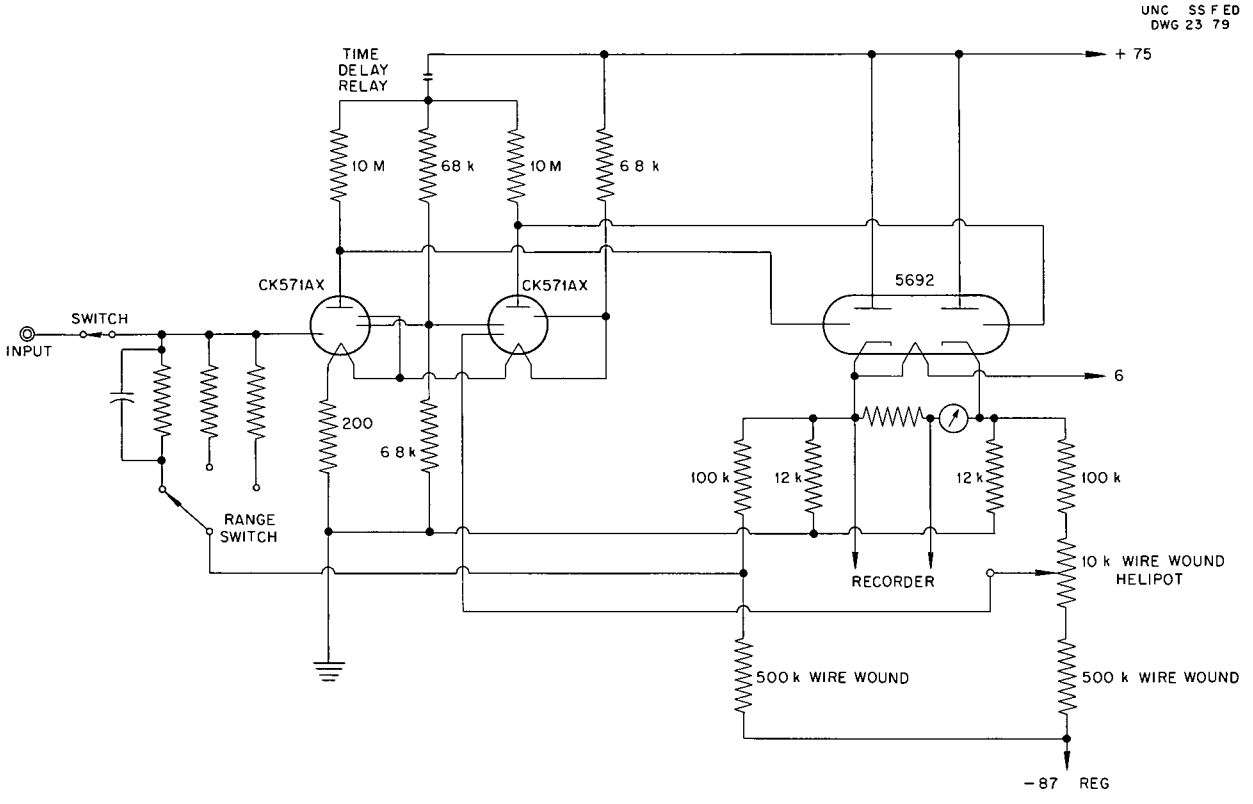

Fig 18 Circuit Diagram of a c Operated Feedback Electrometer

When operated from a nonregulated line the instrument is stable to within 0 2% per day with an input sensitivity of 5×10^{-13} amp

The instrument was stability tested for a total of 20 days The total drift recorded was 0 5% of full scale The drift was unidirectional and at an almost constant rate The input resistance was maintained at 10^{12} ohms during the 20-day test period The drift rate of the instrument is approximately one half that of the Q 826-B electrometer which employs triode electrometer tubes without over all feedback The drift rate of the Q 826-B electrometer is of the order of 0 5% per day

BIOLOGICAL INSTRUMENTATION OF LIQUID SCINTILLATION COUNTER FOR C^{14}

J B Davidson

A liquid scintillation counter for C^{14} is being designed for the Organic Chemistry Group The scintillator currently being used is terphenyl in xylene with a small amount of quaterphenyl added The detector is a 1P21 photomultiplier maintained at liquid nitrogen temperature and operating into an amplifier and scaler unit A sample changer that automatically presents three counting cells alternately to the detector and records the counts of each cell on a separate register has been constructed and has operated satisfactorily The instrument is to be used for routine determination of the ratio of two activities which are to be counted alternately with background The reproducibility of the ratio appears to be satisfactory when two samples of the same activity are counted but is poor for sample ratios other than 1 This is being investigated by studying the effect of the addition of dead material to the weaker sample It is planned to employ an end window type of photomultiplier of high cathode efficiency operating at room temperature so as to provide improved geometry and also to eliminate the use of liquid nitrogen

RADIATION DETECTION SECTION

SMALL CATHODE $B^{10}F_3$ COUNTERS

R E Zedler

There has been an increasing demand for thermal neutron $B^{10}F_3$ proportional counters of high efficiency and small volume (100 cc or less) The smallest counters (Fig 19) produced recently have an effective volume of 1 2 cc (brass cathode with ¼ in ID 1/32 in wall 1½ in effective length) The counters are filled to a pressure of 15 psig with BF_3 (96% B^{10}) and the calculated efficiency is approximately 10% The BF_3 was purified by distillation at a constant pressure (10 cm Hg -121 C) and further purified by distillation from the liquid phase to the filling pressure of 15 psig

Of the four counters fabricated two were made with 2 mil tungsten anodes and two with 4 mil tungsten anodes The characteristics of the counters were determined with an A1 amplifier A1 A preamplifier scaler and Tecktronix oscilloscope Thermal neutrons were obtained from a 10 mg radium beryllium source and paraffin moderator All measurements were made without any appreciable cable length between the counter and preamplifier

The gas amplification curves (Fig 20) were determined for the 2 and 4 mil counters The voltages required to produce a gas amplification factor of 2 were approximately 1700 v for the 2 mil anode counter and approximately 2150 v for the 4 mil anode counter For a gas amplification factor of 5 the voltages were approximately 2150 v for the 2 mil anode and approximately 3000 v for the 4 mil anode

The voltage vs count rate plateaus (Fig 21) were determined For the 2 mil anode counter the plateau slope was approximately 1% per 100 v from 1400 to

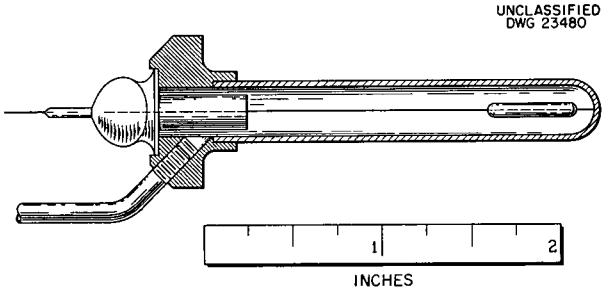

Fig 19 Sectional View of Small Cathode $B^{10}F_3$ Counter

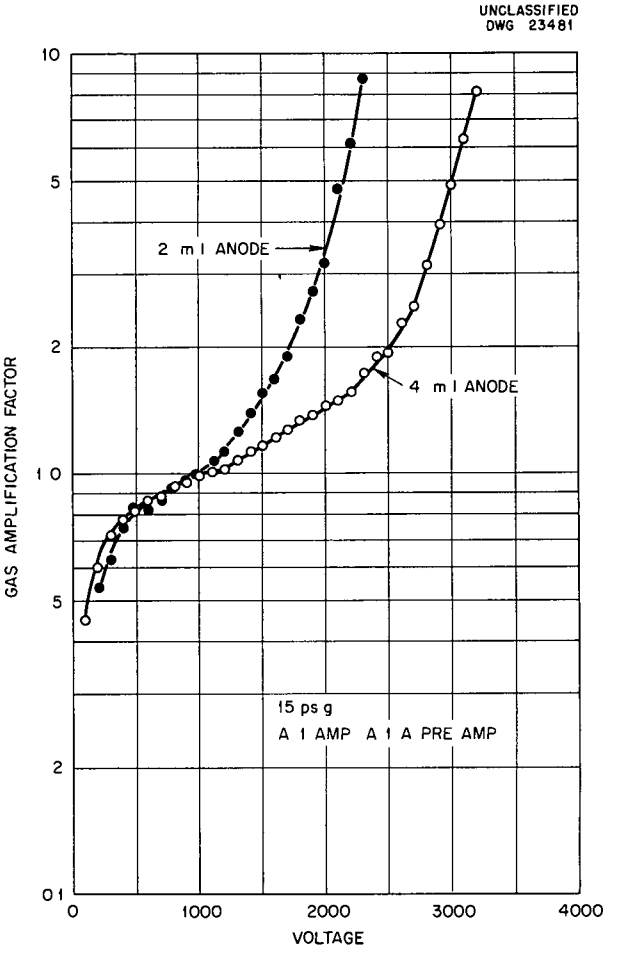

Fig 20 Gas Amplification Factor Curves for Small Cathode $B^{10}F_3$ Counter

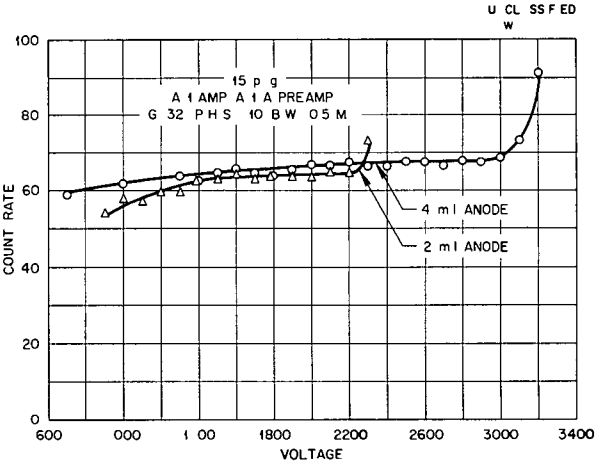

Fig 21 Voltage Plateau Curves for Small Cathode $B^{10}F_3$ Counter

2200 v for the 4 mil anode the slope was approximately 1% per 100 v from 1500 to 2900 v These determinations were made with an A1 amplifier gain setting of 32 pulse height selector setting of 10 and band width of 0 5 Mc

The pulse height distribution curves (Fig 22) were determined for both the 2 and 4 mil anode counters operated at a voltage to give a gas amplification factor of approximately 5

It will be noted that both the 2 and 4 mil counters have exceptionally good operating characteristics It may also be surmised that counters of these dimensions may be filled to higher pressures with good results

FAST NEUTRON PROPORTIONAL COUNTERS FOR DOSIMETRY

G H Burger

Considerable effort has been expended by the Radiation Detection Section in the design development and maintenance of fast neutron proportional counters that are used extensively in shielding experiments These counters are used either as flow counters or pressure filled counters depending on the application The phantom Q 1329 type is employed in high flux regions because of its small size and relatively low sensitivity to high intensity radiation The three section counter Q 1381 is used in neutron dosimetry for lower flux regions An additional type the built in alpha source counter Q 1349, is used in the same radiation intensity as the three section Q 1381 but it contains an alpha source of known energy for calibrating neutron pulse size against the alpha particles

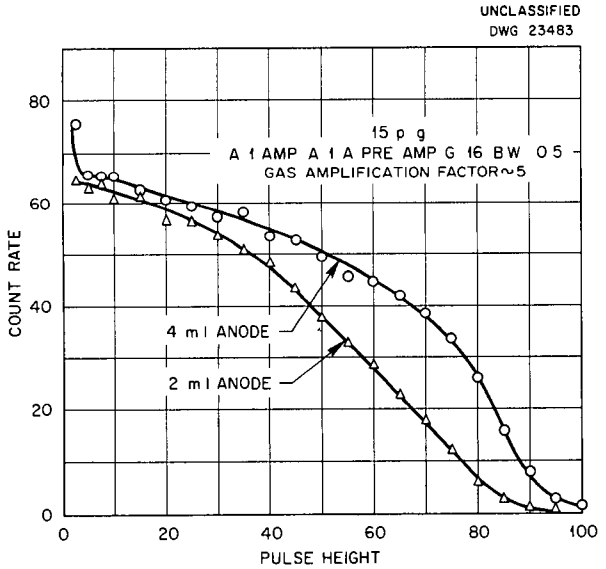

Fig 22 Pulse Height Distribution Curves for Small Cathode $B^{10}F_3$ Counter

All three counters detect protons produced by fast neutron collision with hydrogenous material A brass shell contains the hydrogenous material in two distinct forms one as a liner consisting of polyethylene and the other as a filling gas either ethylene or methane

The three section counter is a recent design to improve on the Q 1100 dosimeter which because of its many complex parts and paraffin hydrogenous material was difficult to construct and maintain In addition to being easy to maintain and construct the Q 1381 dosimeter is much more sensitive The sensitivity was increased by increasing the amount of hydrogenous material and increasing the volume of the counter This was accomplished by constructing the counter in three sections as shown in Fig 23

The use of flow counters instead of pressure filled counters particularly the Q 1381 was brought about as a result of the short life and apparent instability of the Q 1100 In this device the filling gas especially ethylene appeared to decompose rapidly in high flux regions It was suggested that by controlling the pressure and flow of the gas through the counter this problem could be minimized

The equipment used in testing the flow counter was as follows

1 the electronic circuitry consisting of a modified version of an A1 A preamplifier an A1 amplifier integrating circuits with scalers and a high voltage supply
2 the counter components consisting of Q 1381 flow type of dosimeter ethylene gas with regulating valve and atmospheric pressure compensating device
3 sources consisting of a 50 mg cobalt source placed at a distance to give a gamma dose of 2r/hr and a 10-curie polonium beryllium source placed at a sufficient distance to give proper geometry and yet yield 10^4 counts/min

The counter was operated at 2150 v on the center wire and at atmospheric gas pressure The total amplifier gain was approximately 5000 to 6000 A typical curve produced by the tests is shown in Fig 24 where the pulse height is plotted against

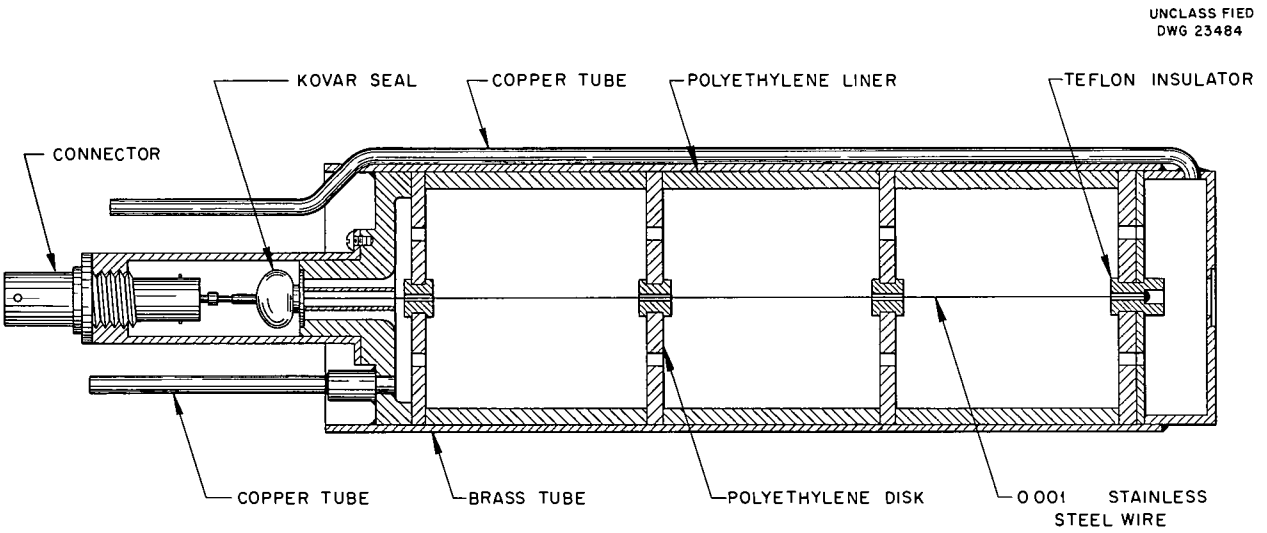

Fig 23 Sectional View of Q 1381 Dosimeter

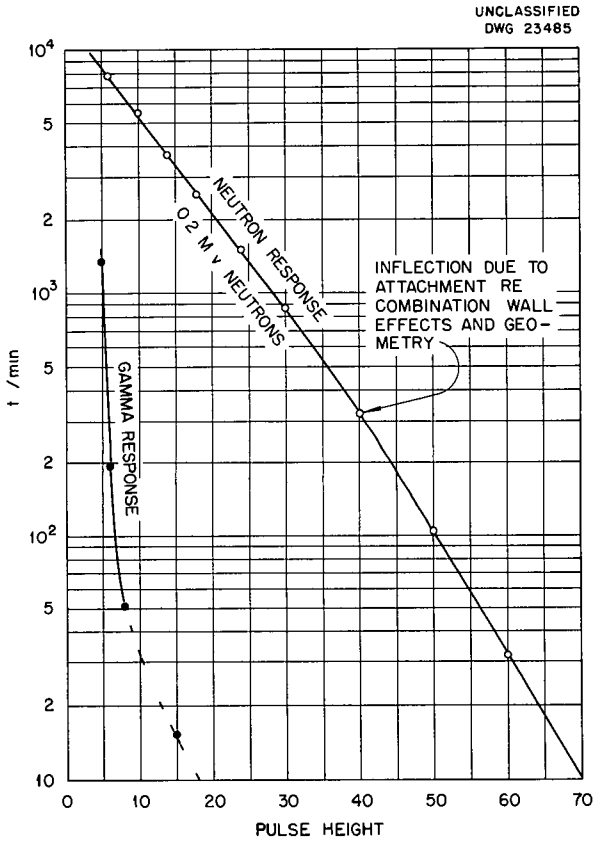

Fig 24 Counts per Minute vs Pulse Height for Q 1381 Dosimeter

counts per minute for both the gamma source and the neutron source This curve has been reproduced to within 2% or less from day to day and over longer periods of time All curves were reproduced with the same setting maintained on all the components including the gas pressure and with a correction made for source decay The gas pressure regu lation of the counter is important as a 1 cm change of pressure causes the counting rate to change by approximately 12% The test results of this counter have been very good and the counter is now being employed in shielding experiments

The Q 1381 filled counter in which methane is used at 2 atm abs is at present in the process of being tested The results thus far are comparable to the flow type of counter Longer term tests will determine its reliability

HIGH VOLTAGE INSTRUMENTATION SECTION

2 Mev VAN DE GRAAFF GENERATOR

R F King J P Judish

The program for providing the 2 Mev Van de Graaff generator with permanent instrumentation has continued This machine has operated at 2 6 Mev maximum energy and a maximum current of 130 μa A greater degree of vacuum system protection was achieved by completion of a system that automatically prevents bombardment of uncooled targets or closed valves and automatically isolates the accelerator and magnet vacuum systems when the pressure exceeds a safe value Permanent cables between the target room and control room have been installed

A spare accelerator tube has been built for the 2 Mev Van de Graaff machine It was found by experience that x rays from the terminal were reduced by a larger factor ($\sim$ 20) by use of waisted electrodes Accordingly the new accelerator tube and the one in use both have waisted electrodes New techniques for polishing electrodes were developed and the electrodes were polished at this Laboratory

5 Mev VAN DE GRAAFF GENERATOR

R F King J P Judish

A Pound magnetometer (nuclear fluxmeter) was installed for the 5 Mev Van de Graaff machine The Pound fluxmeter was found to have a higher signal to noise ratio than did the Varian fluxmeter previously used An auxiliary unit was built to take a signal from the magnetometer and by the use of a phase discriminator and amplifier to position the magnet control to maintain a flux proportional to the fluxmeter frequency

A remote control detector rotator has been constructed for use with the 5 Mev Van de Graaff machine The rotator moves the detector about the target in 5 deg increments thus making possible studies of the angular distribution of gamma ray yields from various nuclear reactions without stopping the machine or exposing the operator to the radiation field

250 Kev COCKCROFT WALTON GENERATOR

R F King

It was discovered that the Beta Electric Company Cockcroft Walton generator was not sufficiently stabilized for the present application Additional stabilization consists of a series stabilizer in which the total current is sampled in the conventional manner thus producing an error signal which is amplified to control a power triode type 35T This tube acts as the series element in the degenerative regulated system Regulation appears to be improved by a factor of 60 as a result of the additional stabilization

GENERAL ACTIVITY

R F King has designed and constructed a small unit consisting of a mercury cell one fixed resistor and a potentiometer to be added to any Q 972 diffusion pump protector With this change the stability of the trip point is dependent largely on the mercury cell voltage and is almost independent of amplifier gain resulting in more stable and dependable operation

H E Banta and R L Macklin[1] have measured the cross section for the reaction $Li^7(d\ t)Li^6$ by collecting and measuring the tritium produced by the reaction The tritium produced is collected in a proportional counter and the beta disintegrations of the tritium are then counted When this method is used approximately 10^9 atoms of tritium equals the counter background counting rate The cross section increases from threshold (1 3 Mev) to the maximum energy obtainable with the 2 Mev Van de Graaff (maximum power 2 5 Mev) and is approximately 100 millibarns at this maximum energy The indicated precision of these measurements is within 10%

[1] Physics Division

FABRICATION AND MAINTENANCE SECTION

PRELIMINARY WORK ON A U^{235} THERMOPILE

J. T. DeLorenzo T. R. Herold[1]

Preliminary work on a neutron thermopile which utilizes U^{235} as the neutron-sensitive coating has been completed. Feasibility tests in the LITR indicate the usefulness of the thermopile as a linear detector of thermal neutrons at flux levels ranging from 5×10^7 to 5×10^{11} nv (neutrons/sq cm·sec). Its output of 19.3 mv per 10^{11} nv represents an increase by a factor of approximately 20 over commercially available B^{10} neutron thermopiles.

[1]Mittelmann Electronics Division of the Century American Corp.

An especially designed case permits the stacking of additional units for even greater outputs at a small sacrifice of an increase of a few inches in case length. Figure 25 shows a disassembled view of the case.

Construction of the U^{235} Thermopile

The basic thermopile assembly employed is manufactured by the Brown Instrument Division of the Minneapolis-Honeywell Regulator Company and is the sensing element of their standard radiation pyrometer. This assembly consists of ten Chromel-constantan thermocouples connected in a radial, series arrangement with all the "hot" thermocouples concentrated at the mid-point. The temperature compensating, or "cold," junctions are located at

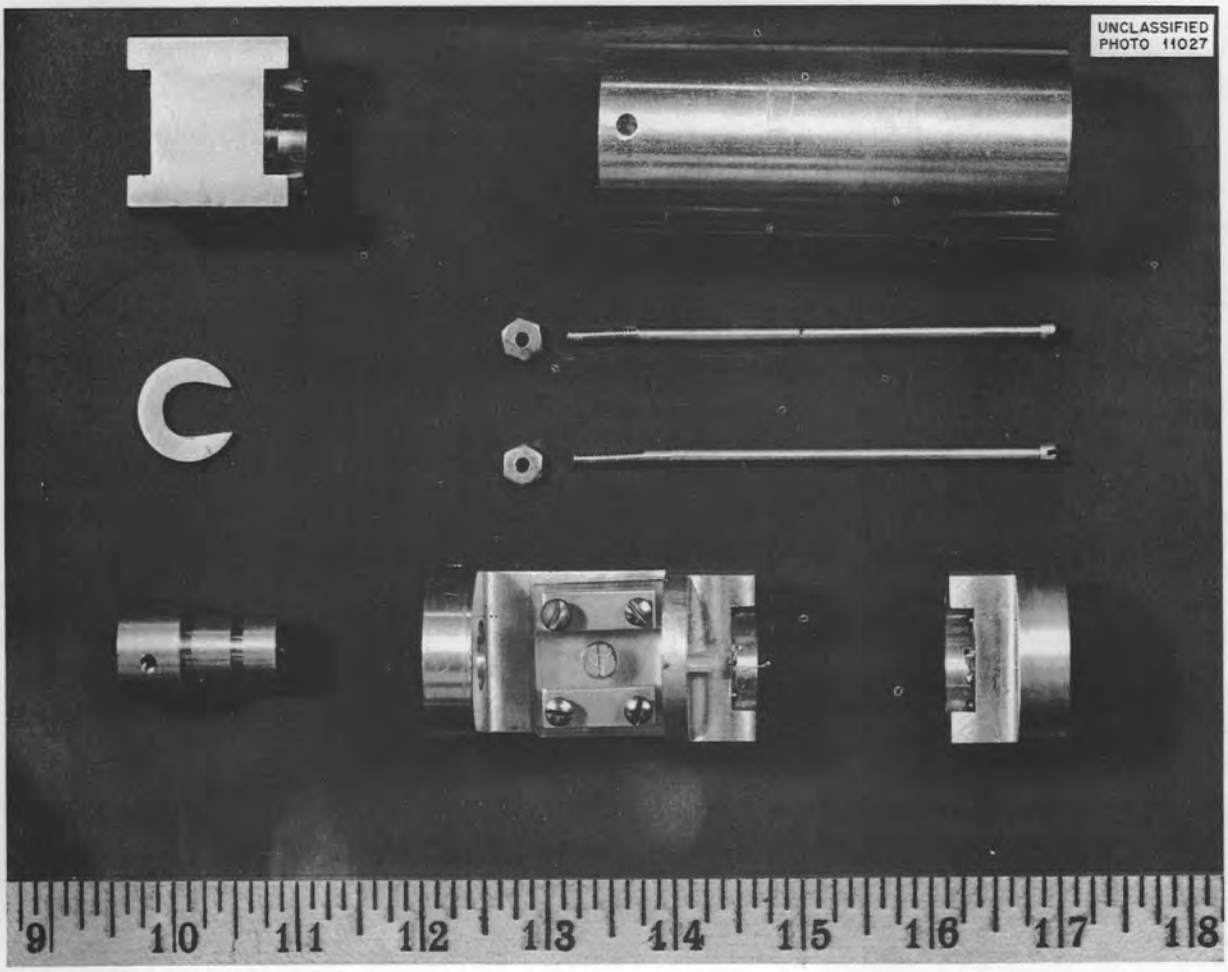

Fig. 25. Disassembled View of U^{235} Thermopile Case.

the periphery of the circular network. Figure 26 shows a coated assembly mounted in an end-piece of a thermopile case.

When electroplating and evaporation techniques were found to be unsuitable, it was decided to apply the U^{235} to "hot" junctions in the powdered form (30 to 40 μ particle size) with an adhesive. Sauereisen No. 1 cement, a liquid porcelain, was selected on the basis of its past performance as an adhesive in the B^{10} thermopile. The deposition process was quite simple, no particular attempt being made to develop an optimum technique at this time. A specified amount of U^{235} was mixed with a small known quantity of thinned Sauereisen cement and the mixture was applied in successive layers to the "hot" thermocouple junctions.

The quantity of U^{235} employed in the deposition process was chosen primarily on the basis of an expected output in a given flux and because of the quantity of Sauereisen required to make a firm bond. This led to a mixture containing approximately 18.7 mg of 95% enriched U^{235} (actually existing as 23.3 mg of U_3O_8 and 40.3 mg of Sauereisen cement).

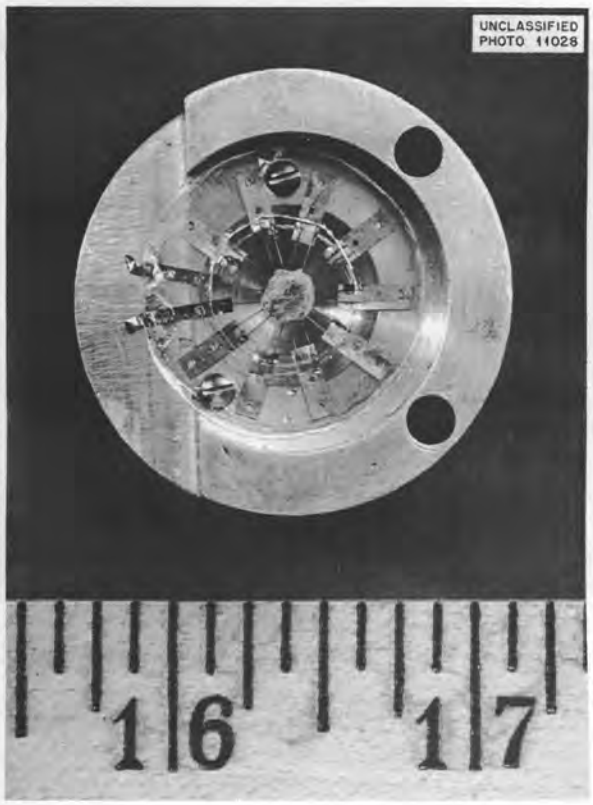

Fig. 26. End View of U^{235} Thermopile Assembly.

Testing of the U^{235} Thermopile

The U^{235} thermopile was tested in one of the downbeam holes of the LITR. The neutron flux was measured at several positions by exposing samples of pure cobalt wire. The output received from the U^{235} thermopile at these same positions as measured with a millivolt potentiometer is plotted in Fig. 27 as a function of the flux at these positions. The experimental curve has been extrapolated mathematically as indicated by the dotted portion of the graph.

The transient response of the U^{235} thermopile to a step change in neutron flux was recorded by a 3-mv continuous-balance potentiometer with a 1-sec pen drive and a chart speed of 1 in./sec. The time constant (time to 63% of the final value) was measured as 20.4 sec. An approximate mathematical analysis of the transient behavior of the thermopile indicates that the Sauereisen cement accounts for about 90% of this thermal lag.

Conclusions

A U^{235} thermopile has been constructed which is capable of measuring thermal-neutron fluxes ranging from 5×10^7 to 5×10^{11} nv in a linear fashion with conventional millivolt detectors. Special high-gain d-c amplifiers can easily reduce the lower limit another decade or more. Stacking of additional units can reduce this lower limit of

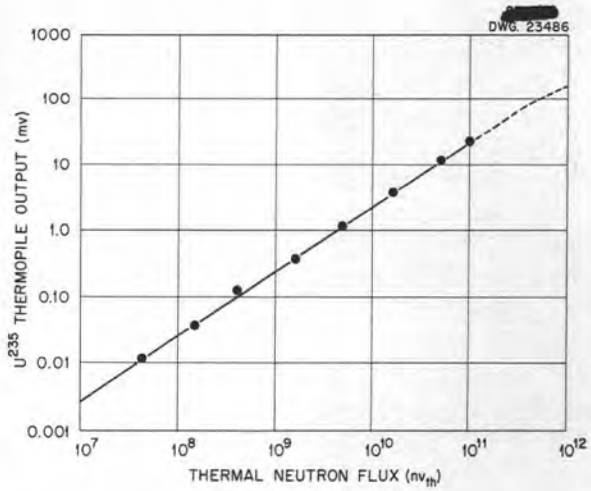

Fig. 27. U^{235} Thermopile Output vs Thermal-Neutron Flux.

sensitivity still further The poor response time of 20 4 sec can be reduced considerably by an improved deposition process possibly by employing an adhesive other than Sauereisen No 1 cement

The stability of the Sauereisen cement under internal bombardment of fission fragments is yet to be determined Also the full effects of ambient temperature variations are still unknown The magnitude of these variations is important in that it is a primary factor in the determination of the lower limit of sensitivity

The added sensitivity of the U^{235} thermopile enhances the possibility of reducing the time constant to the millisecond region by the use of some form of electronic compensation

MAGNAFLOW FLOWMETER MODEL T18 7P0 5 60 SERVICE REPORT

K W West

The flowmeter tested consisted of a sensing head signal amplifier meter amplifier and recorder power supply and magnet supply The flowmeter was designed to measure either a continuous or a pulsating liquid flow of 0 to 600 cc/min with a sensing head sensitivity of 0 36 μv/cc/min and an accuracy of ±1% at full scale

The original instrument received from the factory was installed with equipment listed in the order of the liquid flow as follows a supply reservoir at 0 psi a pulsating dual pump with variable flow of 2 to 20 gph at a constant 58 strokes/min and amplitude modulation from 0 to 100% the pulsing column the flowmeter sensing head and a calibrated receiving container With the amplifier balanced and a no flow signal applied an attempt was made to zero the head An error voltage of ±3% could not be eliminated and was attributed to random noise in the amplifier as well as to a c pickup on the long amplifier input cable However the instrument was correctly calibrated at 500 cc/min and a pulsing flow of 300 cc/min with 0% modulation was applied to the system Successive tests indicated a maximum of −2% error when actual flow was compared with the integrated flow of the recorder The foregoing tests were made with a 5 M solution of aluminum nitrate having a conductivity of 0 1 mho Similar tests were conducted in which triple distilled mercury with a maximum impurity content of 0 25 ppm was used After a short period the flow rate error became excessively large because of mercury contamination of the platinum electrodes in the sensing head

It was suggested that a manually controlled self integrating circuit be added to the meter amplifier to partially eliminate the oscillatory pattern of the recorder when recording pulsating flows and to increase the 600 cc/min range to selective multiples of ×2 ×4 and ×8 After these changes were made the instrument was subjected to similar tests as described previously and with a flow of 500 cc/min and 80% modulation the oscillation of the recorder was held to a maximum of 1% but there was an increased flow error of −4% and difficulty was encountered at this point in an attempt to zero balance the electrodes The difficulty was caused by line noise from the Twinex signal cable With a new and shortened twin lead installed and removed from any power lines and with the regulators removed a maximum distance from the head and grounded balance could be achieved The instrument was still unstable however and required frequent adjustment Flow errors were also introduced by variations in the line voltage and by trapped air bubbles in the liquid which were introduced by increased liquid temperatures Changes in liquid conductivity could be tolerated within the limits of 0 2 mho to 100 μmhos if both phase balance and calibration were checked at each change

With the difficulties determined it was desired to test the flowmeter under the most ideal conditions of constant flow constant temperature constant line voltage and nonvarying conductivity The test equipment consisted of a reservoir constructed to give a constant gravity head a direct vertical flow line to the sensing head and a calibrated discharge orifice using tap water with a conductivity of $2\ 19 \times 10^{-4}$ mho at 18°C The magnet supply voltage regulators as well as the amplifier were fed from the regulated line in the test room With the instrument balanced and calibrated on the ×1 range the results indicated in Table 2 were obtained

The flowmeter was again balanced and calibrated and under the above conditions with constant flow of 322 cc/min on the ×1 range a maximum error of ±1 13% was recorded for a continuous run of 11 days

TABLE 2. FLOWMETER DATA

RANGE	FULL SCALE (cc/min)	ACTUAL FLOW (cc/min)	RECORDED FLOW (cc/min)	FLOW ERROR (%)
x1	600	91 5	91 8	0 328
x1	600	332	330	0 6
x2	1200	332	332	0
x1	600	473	476	0 62
x2	1200	473	476	0 62
x4	2400	473	480	1 48
x8	4800	473	480	1 48
x2	1200	1058	1058	0
x4	2400	1058	1054	0 38
x8	4800	1058	1080	2 1
x4	2400	2058	2062	0 19
x8	4800	2058	2120	3 7
x8	4800	3860	4030	4 4