UNCLASSIFIED

OAK RIDGE NATIONAL LABORATORY LIBRARY
3 4456 0022240 8

CENTRAL RESEARCH LIBRARY
DOCUMENT COLLECTION

ORNL-1768
Progress

4

INSTRUMENTATION AND CONTROLS DIVISION

SEMIANNUAL PROGRESS REPORT

FOR PERIOD ENDING JULY 31, 1954

CENTRAL RESEARCH LIBRARY
DOCUMENT COLLECTION

LIBRARY LOAN COPY

DO NOT TRANSFER TO ANOTHER PERSON

If you wish someone else to see this document, send in name with document and the library will arrange a loan.

OAK RIDGE NATIONAL LABORATORY
OPERATED BY
CARBIDE AND CARBON CHEMICALS COMPANY
A DIVISION OF UNION CARBIDE AND CARBON CORPORATION
UCC
POST OFFICE BOX P
OAK RIDGE, TENNESSEE

UNCLASSIFIED

ORNL-1768
Progress

Copy No. 4

Contract No. W-7405-eng-26

INSTRUMENTATION AND CONTROLS DIVISION

SEMIANNUAL PROGRESS REPORT

for Period Ending July 31, 1954

C. J. Borkowski, Director

DATE ISSUED

SEP 16 1954

OAK RIDGE NATIONAL LABORATORY
Operated by
CARBIDE AND CARBON CHEMICALS COMPANY
A Division of Union Carbide and Carbon Corporation
Post Office Box P
Oak Ridge, Tennessee

OAK RIDGE NATIONAL LABORATORY
3 4456 0022240 8

INTERNAL DISTRIBUTION

1. C. E. Center
2. Biology Library
3. Health Physics Library
4-6. Central Research Library
7. Reactor Experimental Engineering Library
8-12. Laboratory Records Department
13. Laboratory Records, ORNL R.C.
14. C. E. Larson
15. S. J. Cromer
16. L. B. Emlet (K-25)
17. J. P. Murray (Y-12)
18. A. M. Weinberg
19. E. H. Taylor
20. E. J. Murphy
21. E. D. Shipley
22. C. S. Harrill
23. F. C. VonderLage
24. W. H. Jordan
25. J. A. Swartout
26. S. C. Lind
27. F. L. Culler
28. A. H. Snell
29. A. Hollaender
30. M. T. Kelley
31. K. Z. Morgan
32. T. A. Lincoln
33. A. S. Householder
34. C. E. Winters
35. D. W. Cardwell
36. E. M. King
37. G. E. Boyd
38. W. J. Ladniak
39. P. R. Bell
40. C. J. Borkowski
41. G. S. Hurst
42. R. S. Livingston
43. E. E. Fairstein
44. J. W. Morfitt
45. C. W. Sheppard
46. W. G. Stone
47. D. D. Cowen
48. C. P. Keim
49. C. D. Susano
50. P. M. Reyling
51. G. C. Williams
52. M. J. Skinner
53-54. J. V. Francis
55. R. W. Johnson
56. D. J. Fisher
57. E. G. Struxness
58. J. R. McNally, Jr.
59. J. L. Gabbard
60. R. A. Charpie

EXTERNAL DISTRIBUTION

61-62. Ohio State University (Professor of Naval Science)
63. R. Hofstadter, Stanford University
64. J. C. Nance, Consolidated-Vultee Aircraft Corporation
65. J. A. Dever, Minneapolis-Honeywell Regulator Company
66. E. A. Rollor, ANP Project Office, Fort Worth
67. Division of Research and Medicine, AEC, ORO
68-307. Given distribution as shown in TID-4500 under Instrumentation category

DISTRIBUTION PAGE TO BE REMOVED IF REPORT IS GIVEN PUBLIC DISTRIBUTION

CONTENTS

Oak Ridge Automatic Computer Logical Engine (ORACLE) 1
Experimental Investigation of RCA Type C73621 Storage Tubes 4
ORNL Version of Hutchinson-Scarrott Pulse Analyzer 7
Identity of Fluorescent- and Delayed-Light Emission Spectra 13
Linear Count-Rate Meter (Q-1511) 14
8000-Cycle Oscillator (Q-1515) 18
Regulated Negative-Voltage Power Supply 18
Sequence Interval Timer (Q-1527) 19
Temperature-Control Units for Molecular-Beam Studies 20
Metallurgy Creep-Test Laboratory Expansion and Modification 21
Flow Recorder-Sampler for 4500-Area Liquid Waste 21
Test of Precision Low-Pressure Gas Regulators 22
Preliminary Report on High-Temperature Adiabatic Calorimeter 24
Variable-Rate Pulse Simulator 25
Accurate Logarithmic Count-Rate Meter 25
Mechanical-Vibration Studies 27
Recording Instrumentation for Welding Operations 28

INSTRUMENTATION AND CONTROLS DIVISION SEMIANNUAL PROGRESS REPORT

OAK RIDGE AUTOMATIC COMPUTER LOGICAL ENGINE (ORACLE)

E. W. Burdette

The ORACLE, which was constructed for ORNL at Argonne National Laboratory with the cooperation of ORNL personnel, is operating successfully. This machine is a binary, parallel, electronic, digital computer with words of 40 bits each. A one-address code is used in the computer, and each 40-bit word contains two 20-bit instructions that contain a 10-bit order and a 10-bit address each. A fixed binary point is used, and a complemented representation of negative numbers is used with −1 permissible and +1 not representable.

Multiplication is accomplished in 40 steps by successive addition. Division is accomplished in 40 steps by successive subtraction. The order code has five basic arithmetic orders with eight types of add orders, two multiply orders, four divide orders, eight right shifts, and eight left shifts. There are 6 basic nonarithmetic orders with 10 transfer-of-control orders, 4 input-output orders, 16 magnetic-tape orders, and 33 transfer-of-information orders.

The computer is divided into the following seven basic units: the arithmetic unit, the electrostatic memory unit, the control unit, the input-output unit, the magnetic-tape memory unit, the power supply, and the console.

Figure 1 is a block diagram of the computer functions. The arithmetic unit, block No. 1, consists of three storage registers, a parallel logical adder, an M-to-Q selector, and four driver chassis. Two of the registers, A and Q, are shifting registers, and each contains two banks of 40 flip-flop circuits with transfer gates between the flip-flop banks. In the shifting registers, the asymmetrical flip-flop is used, together with a system of clearing and transferring so arranged that a shifting operation can be made in 2.5 to 3 μsec. The shifting registers also have an overflow feature that allows easier programing of scaling operations and floating-point routines.

The parallel logical adder is a voltage-type adder consisting of gates that follow the logical adder scheme. Each adder stage contains seven dual-triode tubes and two double thermionic diodes. The carry-time per adder stage is 0.1 μsec; thus a total carry-time of 4 μsec for 40 stages is permitted.

The M-to-Q selector serves as a fast switching and dispatching medium for transfers between the memory unit and the arithmetic unit; thus it permits partial substitution from the storage registers and is a direct transfer that does not require a pulse routine of the arithmetic unit.

Drivers for the registers operate the clear and transfer lines, in addition to providing a regulated pulse amplitude for all gating signals to ensure greater reliability of operation.

Automatic sequencing of machine operations is accomplished by the control unit, block No. 2 in Fig. 1. The arithmetic unit has an asynchronous control, and the memory unit contains a synchronous control. The dynamic programmer, static programmer, and shift counter make up the arithmetic control system. The dispatch counter, pulsers, and mixer constitute the memory control. The memory order-sequence control (MOSC) synchronizes the operation of the arithmetic and memory controls.

The dynamic programmer generates a pulse-routine that transfers information in the arithmetic unit after the static programmer decodes the order and sets up the transfer gates. The shift counter consists of a six-stage binary scaler that accounts for each arithmetic step and generates a recognition signal at the end of an operation sequence.

The dispatch counter locates the deflection system of the memory at the position specified by the address of the order. It automatically sequences the order pairs and controls the regeneration of the memory. Ten pulse generators are employed to provide the pulses necessary to actuate the memory storage system and to control the operation of the memory order-sequence control.

The mixer combines various pulses and dispatches them to the memory stages for operation of the memory unit.

UNCLASSIFIED
ORNL-LR-DWG 2538

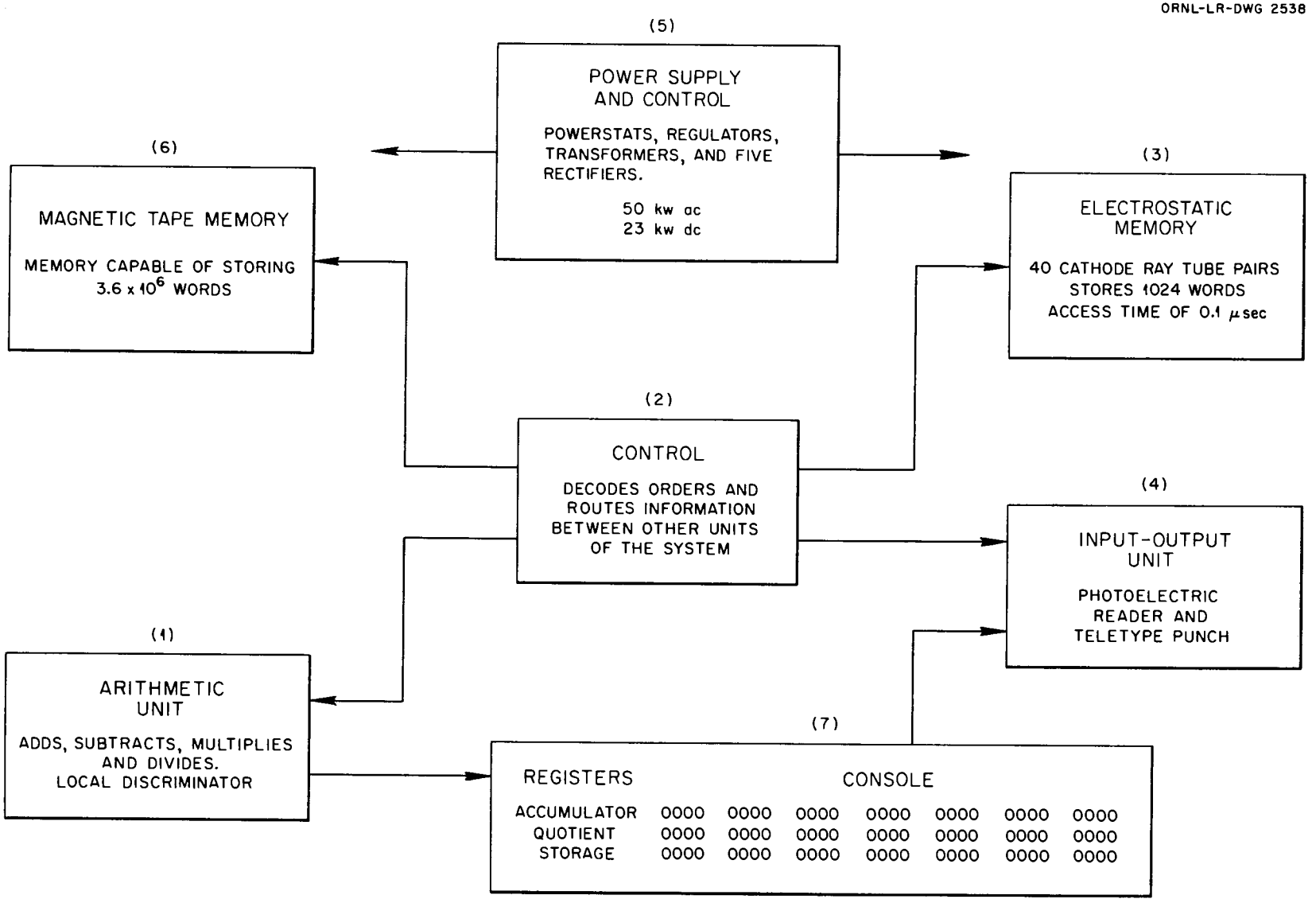

Fig. 1. Block Diagram of ORACLE Operation.

The electrostatic memory, block No. 3, consists of 43 plug-in memory stages, 40 in constant service and 3 in warm-up. Deflection adders and a slave oscilloscope are also included in the electrostatic memory. The Williams-type storage system is used with a dot-dash display. Eighty 3JP1 cathode-ray tubes are included, and there are two tubes, operating in parallel, per stage. A time multiplex pulsing system permits identical information to be stored on both tubes of a single stage. This method employs a raster of 1024 digits. In the event that impurities do not exist on the cathode-ray tubes or are not objectionable, the system can store a raster of 1024 digits on each of the 80 cathode-ray tubes, giving a total memory of 2048. The stability of the system is greatly increased by use of an automatic beam-current stabilization which compensates for drifts that change the amplitudes of the "1's" signal. The memory cycle is 20 μsec, and at least one regeneration occurs after each action cycle writes or reads information into storage.

At present, input to the computer consists of a Ferranti photoelectric reader, block No. 4, that loads the machine at a rate of 200 sexadecimal characters per second. Output from the computer is a teletype punch operating at a rate of 20 sexadecimal characters per second. Five Power Equipment Company rectifiers, block 5, supply the d-c power; primary power is approximately 50 kw.

The magnetic-tape memory, block 6, has been built and is now being installed. This component is an auxiliary memory system having four tape-drive units with 1200 ft of 2-in. tape per unit. Each tape has 42 channels with a packing density of 100 words per inch. The total storage capacity of the device is 3,600,000 words or 151,200,000 bits. More details will be given on the operation of this unit at a later date.

The temporary console, block 7, has been installed, and all register lights have been brought out to the console and grouped in a centralized display for easy inspection by the operator. Adjacent to the register lights is a cathode-ray-tube monitor for checking any stage of the memory system. Switches are provided to operate the input-output equipment. Special orders and corrections can be inserted into the machine via the console. Engineering test switches are also included in the console for trouble shooting and emergency servicing.

Improvements to increase the speed and flexibility of the input-output system are being designed; they include a curve-plotter output, magnetic tape output, Soroban punch output, tape perforation equipment, and tape printing equipment.

A parity checking system called an "odd-even" check is being designed for the electrostatic memory unit, the input, and output equipment. This system will be covered in detail in a future semi-annual report.

EXPERIMENTAL INVESTIGATION OF RCA TYPE C73621 STORAGE TUBES

R. J. Klein

The ORACLE has for some time been performing satisfactorily with the standard commercially available type 3JP1 cathode-ray tubes for memory storage. However, a redundant storage technique has to be employed so that there will be storage at all memory locations, even though some of the storage tubes have small impurities at certain points that cause them to be incapable of storage action. Furthermore, the focus on these tubes, while better than that on most standard cathode-ray tubes, is not all that could be desired for Williams-memory use.

A new type of cathode-ray tube, specifically designed for Williams storage application, has been under development for some time by the Radio Corp. of America. Design features of this tube promise to overcome the major difficulties of poor focus and impurities which are present in other types of tubes.

If impurity-free screens and excellent focus can be provided by the new tubes, the ORACLE memory will be capable of twice its present capacity and of increased reliability; merely inserting the new tubes and making a few parameter changes will effect the change. These parameter changes are the key to the successful operation of any different type of storage tube that would be used.

TESTING PROCEDURE

In order to perform the experiments necessary to determine the optimum value of the parameters, special test equipment was used. The sample of tubes tested consisted of 20 RCA Type C73621 storage tubes – 11 from one batch and 9 from a second batch.

The following procedure was used for testing the tubes.

1. All test equipment was checked.
2. The various methods of attaching the signal pick-up screens were investigated.
3. The various storage parameters were adjusted so that the optimum values of the tube could be determined.
4. The above parameters were used for testing the tubes for electrical focus.
5. The tubes were checked for impurities on their storage screens.

INVESTIGATION OF PICK-UP SCREENS

The usual method of attaching the signal pick-up screens to the tubes involves cementing a small patch of fine-mesh copper-screen wire to the face of the storage tube, which requires some 15 min to apply per tube and an additional 24 hr to dry. Because of the limited time available to perform the tests on the 20 cathode-ray tubes, it was thought advisable to try some of the less time-consuming methods. One alternative consists of taping the patch of screen to the tube with a pliable tape such as masking tape. Still another method, not so fast as the tape-screen technique but faster than the glue method, is to paint the face of the tube with a conductive paint.

Each of the above screening methods was applied to a single tube, and the resulting performance of the tube was noted in each case. Since there was no perceptible difference, tape, the fast method, was chosen for the remainder of the tests.

ADJUSTMENT OF PARAMETERS

In order to judge the fitness of a cathode-ray tube for Williams storage, it is necessary to operate it under conditions that are best suited to that particular type of tube. The various operating parameters, such as the accelerating voltage, pattern configuration, pulse widths, and amplifier gain, must be adjusted while the operation of a tube is being observed. Several of the parameters are interacting, and as a result various combinations must be tried before optimum settings can be obtained. Once these best conditions are determined, the remaining tubes are tested without the parameters being changed. Only the focus voltage and intensity-grid bias are changed from tube to tube. This simulates the operation of the complete memory, where the major parameters (everything except intensity and focus) are common to all stages. The parameters used are shown below:

Total accelerating voltage	2000 v
Pattern used	32×32 array of storage locations, 1024 in all
Pattern size	$1\frac{5}{8} \times 1\frac{1}{2}$ in.

Astigmatism voltage	Set to average deflection-plate voltage
Dot pulse length	1 μsec
Dash pulse length	5 μsec
Amplifier gain	30,000
Dash signal amplitude	20 v
Bias level	15 v

TESTING OF TUBES FOR ELECTRICAL FOCUS

After the test equipment was set up and the parameters were determined, all 20 tubes were checked for electrical focus. The actual test consisted in writing information, at various storage locations on the tubes, many times without regenerating the nearby locations. These nearby locations are then inspected to determine whether or not they have been altered by the spill electrons. This is a form of read-around test, which has proved to be a severe test for storage tubes. The number of times one location could be consulted without its neighbors being affected is used as a figure of merit for that particular tube. It is called the read-around ratio and is shown in Table 1, together with the other tabulated results of the tests.

TESTING OF TUBES FOR SCREEN IMPURITIES

As mentioned, another of the limiting factors in the present ORACLE memory is the small storage

TABLE 1. TEST RESULTS ON 20 RCA TYPE C73621 STORAGE TUBES

Tube No.	Intensity Grid Bias* (v)	Focus Voltage* (v)	Read-Around Ratio	Number of Impurities
F1	20	519	1250	0
F2	22	530	1100	0
F3	19	516	500	0
F4	21	520	750	0
F5	25	526	1600	0
F6	23	535	1000	0
F7	21	515	500	0
F8	22	524	650	0
F9	19	507	600	0
F10	21	536	1300	0
F11	30	527	700	0
PP24	20	535	600	0
PP25	17	491	900	0
PP26	21	524	450	0
PP27	19	530	500	0
PP28	18	533	500	0
PP29	20	629	700	0
PP30	20	522	475	0
PP31	21	530	800	1**
PP32	22	526	300	0

*Required for operating the tubes at 2 kv accelerating potential.

**About 50%.

defects on the screen of the present cathode-ray tubes. These impurities allow only one type of charge pattern to be established at these points instead of the usual two. Any substance on the storage surface whose secondary electron emission ratio is less than unity at the accelerating voltages normally employed will, therefore, be an impurity. The Aquadag coating used as an accelerating electrode inside the cathode-ray tubes is essentially carbon. Any small flakes or specks of this coating on the screen can prevent storage, as the secondary emission properties of carbon are very poor. Almost all standard cathode-ray tubes have one or more of these impurities.

The RCA storage tubes were supposed to have been manufactured with the utmost care to ensure complete freedom from foreign substances on the storage area. Furthermore, this care must extend to very gentle handling of the tube after manufacture and to face-up shipment.

A motor-driven pattern-shifting device was attached to the test equipment to allow the pattern of 1024 storage locations to be moved slowly over the entire storage area. The test then consisted in writing a pattern of the difficult-to-remember type of charge configuration, called a "dash," then slowly shifting this pattern. The shifting rates on the horizontal and vertical axes were different so that every increment of the storage area was used at one time or another. If any impurities are present in this area, one or more of the dashes will turn to dots.

Sweeping of the storage area must be done very slowly, as it takes about 1.05 sec to regenerate the entire 1024 dashes. If the pattern is moved more than one tenth of a spot diameter between regenerations, serious deterioration of signals is observed.

The size of the impurity has a direct bearing on the performance of the tube. Small blemishes reduce the normal signal somewhat but are not objectionable unless they make the signal unusable. In the present ORACLE memory system, a 25% reduction in dash signal is tolerable; hence, during the test, this figure was used as the standard. For example, if the dash output from any of the storage locations fell below 75% of its normal level, an impurity was recorded for this location.

OBSERVATIONS

The following general observations were made during the testing of the new tubes.

1. The maximum obtainable dash signal was considerably larger from the RCA tubes than from the presently used 3JP1 tubes.
2. The shielding properties of the third anode were more effective on the RCA tubes.
3. A storage screen charging effect was noted. The storage signals did not stabilize for several minutes after the voltages were applied to the tubes.
4. The pattern centering was not very consistent. No provision can be made in the computer to center the pattern on individual tubes; therefore, inconsistent centering means that the pattern must be made smaller than would be necessary on well-centered tubes, resulting in poorer performance because of crowding of the storage locations.
5. Focus at low accelerating voltage seems to be much better, in general, than on conventional cathode-ray tubes.

CONCLUSIONS

From the standpoint of impurities, the new tubes are certainly an improvement over the present tubes. Only one impurity was found on the entire lot, representing about 5% rejection for this cause. The figure for ordinary cathode-ray tubes is approximately 50%.

The read-around performance of the tubes is not outstanding. It indicates some improvement over that of the present tubes but is not a drastic change. The improvement is of the order of 30 to 50%, on the average. The new tubes were not constant in read-around ratio, which would probably be cause for rejection of about 20 to 30%.

Ten of the RCA experimental type tubes are being forwarded to Oak Ridge National Laboratory from Argonne National Laboratory and will be tested here for read-around performance in ORACLE memory, if possible. With the experience gained in testing these tubes with the Argonne equipment, it is hoped that a few stages of the ORACLE memory can be altered to accept the new tubes for test purposes, without major change of the memory control itself.

ORNL VERSION OF HUTCHINSON-SCARROTT PULSE ANALYZER

T. L. Emmer R. D. Sidnam

A pulse-height analyzer employing a mercury-delay-line memory unit is being completed for use at ORNL. Based on an original design from the Cavendish Laboratories, Cambridge University, this 100-channel analyzer has a maximum average count-rate of 2000 counts/sec and a storage capacity of 4095 counts per channel.[1,2,3] Figure 2 is a panel view of the analyzer.

When a pulse-height analyzer having approximately 100 channels is under consideration, two problems are immediately apparent. These problems involve interchannel drift and an economical, trouble-free memory unit for storing pulse-height information. In the conventional voltage discriminator type of pulse-height analyzer, the pulse-height spectrum is separated into channels by a series of biased trigger circuits. Thus, any drift in the grid-to-cathode potential of the triggers will cause interchannel drift. Each trigger is followed by a series of scalers and a mechanical register to store the pulse-height information. For 100 channels, then, this type of storage system is the major expense of the analyzer and is the cause of a greater share of the instrument failures. By changing the pulse-height spectrum into a time spectrum, a large amount of information can be stored with relatively few components, and the interchannel drift will depend only on the transducer used to convert voltage into time. Thus, the two problems can, to a great extent, be eliminated.

The method of changing pulse height into time is explained from the block diagram and wave forms of Figs. 3 and 4. A pulse from the detector, after amplification, charges a condenser to the maximum pulse voltage. This charged condenser then maintains the voltage until the pulse is analyzed (this is called "pulse stretching"). As shown in Fig. 4, two stretched pulses with amplitudes between V_4 and V_5 are compared with a reoccurring sweep of period, T. When the sweep voltage coincides with the stretched-pulse voltage, a comparison pulse is generated. This comparison pulse has a time coincidence with the fifth channel pulse, generating an add pulse at a time T_5 after "zero time" – the start of a sweep. Thus, any stretched pulse in the voltage interval, $V_5 - V_4$, will generate a comparison pulse which starts in the time interval $T_5 - T_4$, and this comparison pulse will cause an add pulse to be generated at the beginning of the fifth channel or at time T_5 after zero time.

After the stretched pulses are converted into time, a means must be available to store the pulses in their proper time sequence. This is done by means of a mercury-delay-line memory unit. Figure 5 is a block diagram of the memory unit, and a photograph of the delay line is shown in Fig. 6. The mercury delay line consists of two quartz crystals separated by a column of mercury. A modulated pulse from the transmitter vibrates the crystal on one end of the delay line, and a burst of acoustic energy is sent down the mercury column. After a delay, T, the sound burst vibrates the crystal on the other end of the delay line, generating a voltage pulse which is amplified and detected and fed back into the add-gate. The add-gate immediately replaces the pulse in the transmitter. Hence, any pulse placed in the delay line will be recirculated with a period T.

An initial pulse in the delay line is used to trigger the linear sweep so that each time the initial pulse enters the add-gate the sweep starts its rundown. This is the "zero time" for each recirculation period. When a stretched pulse in the voltage interval $V_5 - V_4$ is analyzed, an add-pulse is generated at a time T_5 after zero time. This add-pulse is placed in the delay line by the add-gate at time T_5 and recirculated with a period T, always keeping its time position of T_5 after zero time.

The analyzer would now count pulse heights and store the counted pulses in time sequence in the delay line, but the storage capacity would be only 1 count per channel. Since a stretched pulse that is in the voltage interval $V_5 - V_4$ is represented by a pulse in the delay line at time T_5 after zero time and a stretched pulse in the voltage interval $V_6 - V_5$ is represented by a pulse in the delay line at time T_6, a series of pulses could be placed between T_5 and T_6 to represent the number of pulses counted in the voltage interval $V_5 - V_4$.

[1] G. W. Hutchinson and G. G. Scarrott, *Phil. Mag.* 42, 792 (1951).

[2] A. B. Van Rennes, *Nucleonics* 10, No. 10, 50 (1952).

[3] G. W. Hutchinson, *Nucleonics* 11, No. 2, 24 (1953).

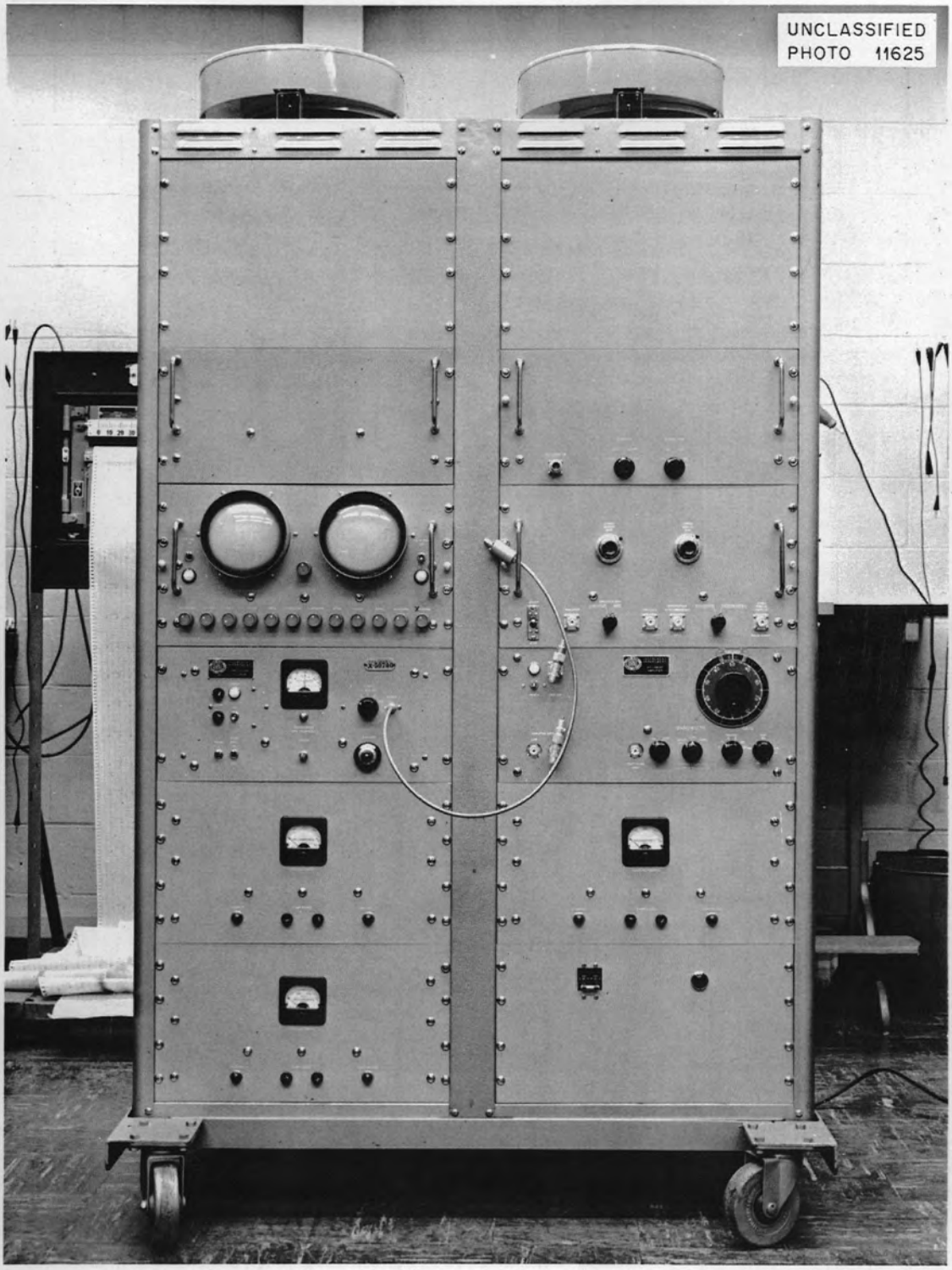

Fig. 2. Front-Panel View of 100-Channel Analyzer.

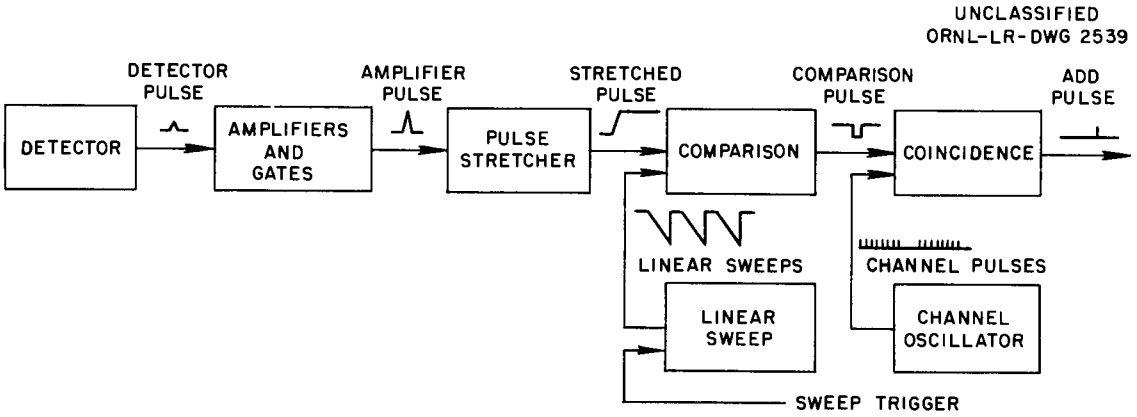

Fig. 3. Block Diagram for Voltage-to-Time Conversion.

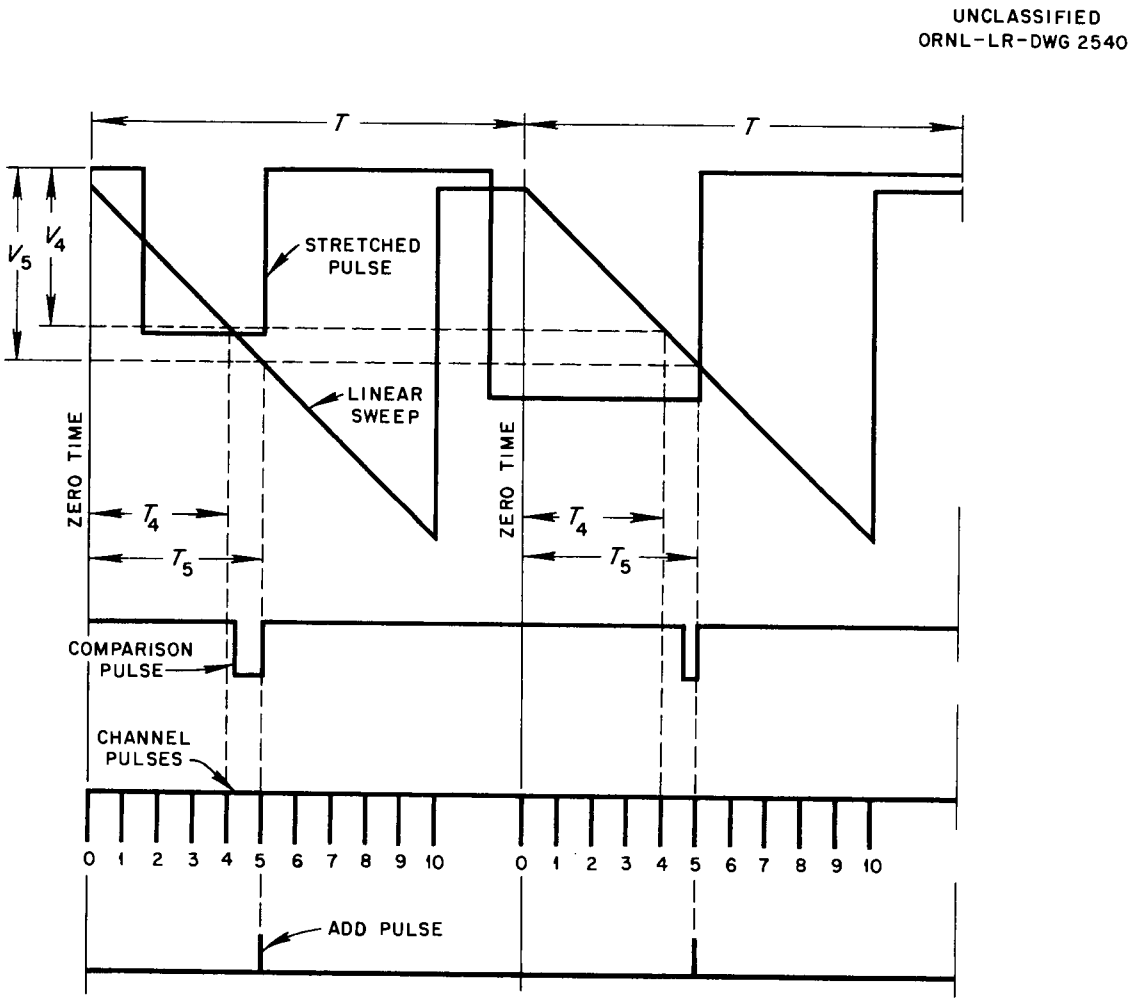

Fig. 4. Wave Forms for Voltage-to-Time Conversion.

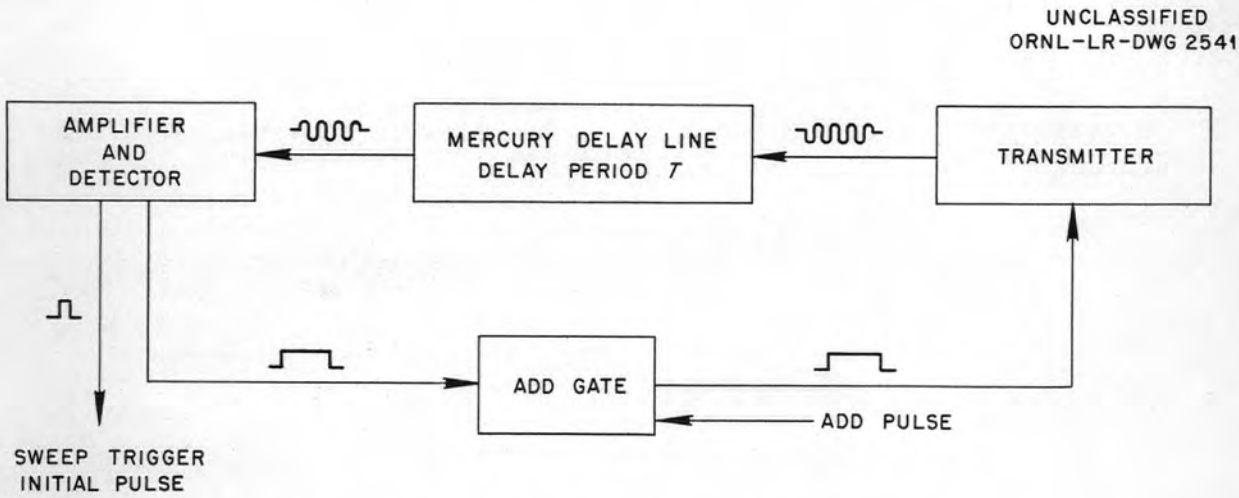

Fig. 5. Block Diagram of Mercury-Delay-Line Memory Unit.

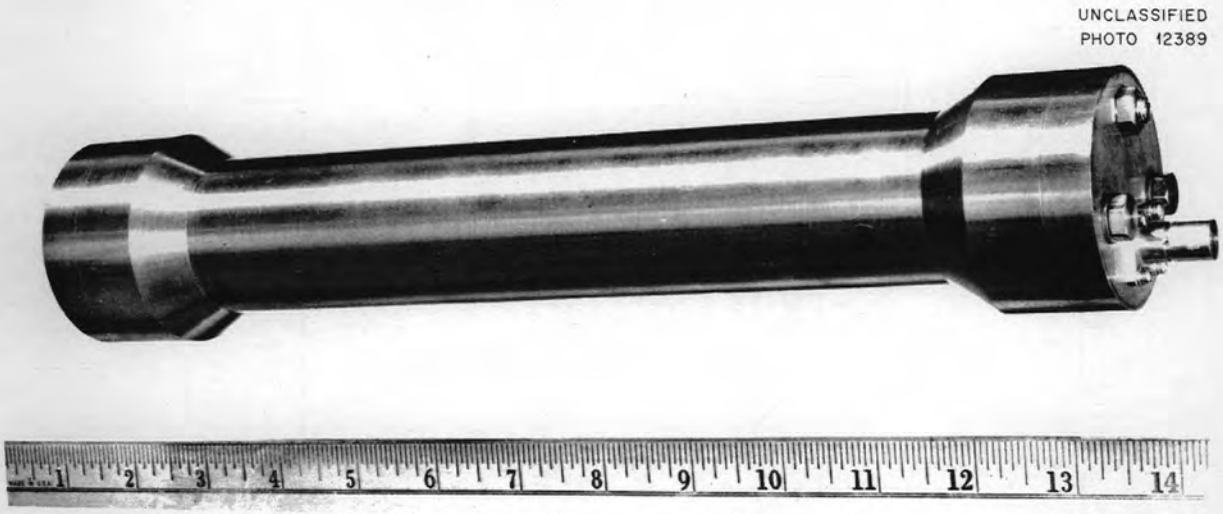

Fig. 6. 1200-μsec Mercury Delay Line.

If pulse positions are used to represent a number, nine pulse positions must be available in order to represent a number between 0 and 9 in the decimal system, while only four pulse positions are necessary in a binary system. This is obvious from Table 2. The binary system is used to store the greatest amount of information in the allowed time interval.

The mechanical process of adding 1 in the binary system is to start from the right and change all 1's to 0's up to the first 0, then to change that 0 to 1 (shown in Table 3). Hence, the add-gate of the memory unit must be designed to perform the following operations:

1. replace all pulses coming out of the delay line back into the line,
2. place add pulses, which represent pulse heights, into the delay line,

3. perform a binary addition when more than one pulse is counted in a channel.

While information is being stored in the memory unit, some means must be available to monitor the memory, and eventually the information must be written out as a permanent record. The display unit, shown in Fig. 7, performs both these functions. The channel pulses are used as triggers for a sawtooth generator, whose output is fed to the vertical plates of a cathode-ray tube. The linear sweep is used as a horizontal sweep for the cathode-ray tube. Thus a system of vertical rasters is produced on the screen of the cathode-ray tube, each raster representing a voltage interval in the pulse-height spectrum. Since the pulses in the delay line in each channel are spaced in time to represent the number of pulses counted in that channel in a binary fashion, they are used to intensity-modulate the tube. On each raster, representing a voltage interval in the pulse-height spectrum, there is a series of dots representing the number of pulses counted in that voltage interval. A permanent record is obtained by photographing the cathode-ray tube. A typical photograph is shown in Fig. 8.

In this instrument the delay line has a total delay time of 1200 μsec. The fundamental bit-spacing in the delay line is one per microsecond and the channel spacing is 12 μsec. There are one hundred 12-μsec channels with a storage capacity of 12 binary bits or 4096 counts per

TABLE 2. BINARY vs DECIMAL REPRESENTATION

0 Represents no pulse in that position
1 Represents a pulse in that position

Number	Decimal Representation	Binary Representation
0	000000000	0000
1	000000001	0001
2	000000010	0010
3	000000100	0011
4	000001000	0100
5	000010000	0101
6	000100000	0110
7	001000000	0111
8	010000000	1000
9	100000000	1001

TABLE 3. BINARY ADDITION

Numerical Operation	Binary Operation
4 + 1 = 5	0100 + 0001 = 0101
5 + 1 = 6	0101 + 0001 = 0110
6 + 1 = 7	0110 + 0001 = 0111
7 + 1 = 8	0111 + 0001 = 1000

UNCLASSIFIED
ORNL-LR-DWG 2542

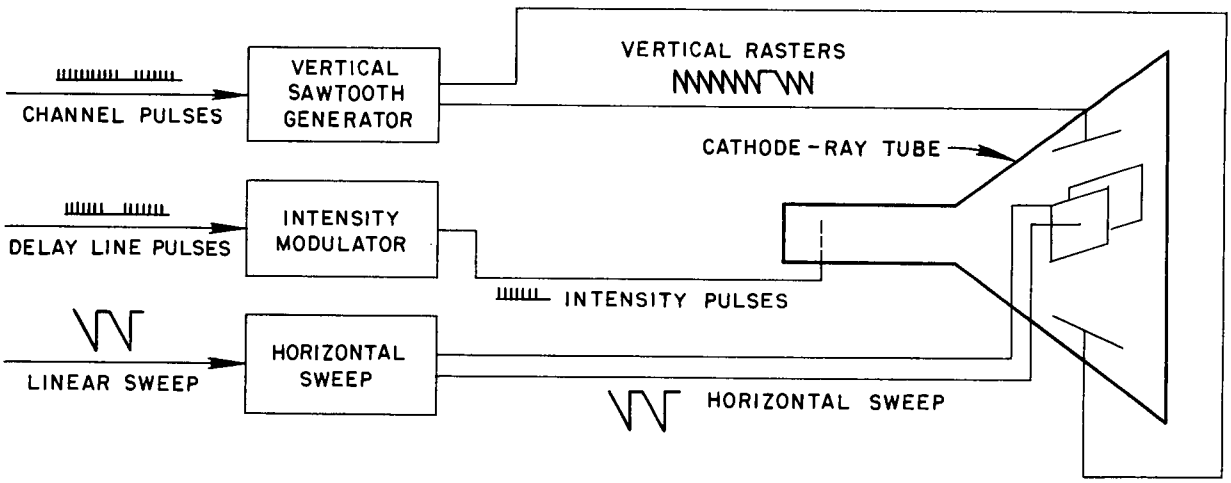

Fig. 7. Block Diagram of Display Unit.

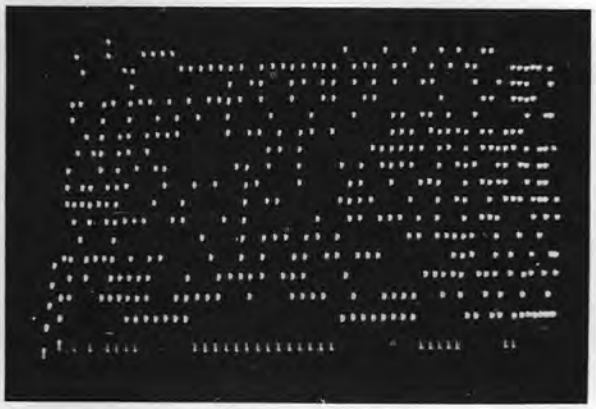

Fig. 8. Oscilloscope Display of Pulses.

channel. The linear sweep swings through 200 v, giving a channel spacing of 2 v. The interchannel drift depends essentially on the linearity of the linear sweep, which is, in this case, approximately 0.1%. Since the analyzer is intended for low counting rates, the long-time stability must be good. Total drift is dependent upon the stability of the linear sweep, channel oscillator, amplifier gain, and the power supply voltage. The over-all, or total, drift has been reduced to within tolerable limits by ordinary stabilizing techniques.

The front end of the analyzer contains the preamplifier, linear amplifier, gating circuits, and pulse stretcher (see Fig. 9 block diagram). The preamplifier is similar in design to an A1-D preamplifier, ORNL Q-1326-8. Since the preamplifier must be located near the detector, it is designed to drive a relatively long cable so that the detector and preamplifier can be used as a remote unit with the cable feeding into the analyzer.

The linear amplifier is an A1-D, ORNL model Q-1326. It provides a 50-v maximum pulse for either of the two input amplifiers. One input amplifier inverts and amplifies the pulse to a negative 200-v maximum. The other, containing a fixed 100-v biased stage and sufficient amplification, again produces a negative 200-v pulse. This arrangement was used because it sorts the pulses at the highest possible voltage; it reduces the effects of drift and noise and provides a biased amplifier with expander to cut off all pulses below a preset pulse height.

The pulses are fed to the gate circuit at a maximum pulse height of −200 v. This gate, which is normally open, is closed during the period when a pulse is being analyzed. The gate contains a 50-v variable bias, which, in conjunction with the lower limit, is used to reject pulses and noise below a predetermined setting. This setting is adjustable from the front panel of the analyzer.

UNCLASSIFIED
ORNL-LR-DWG 2543

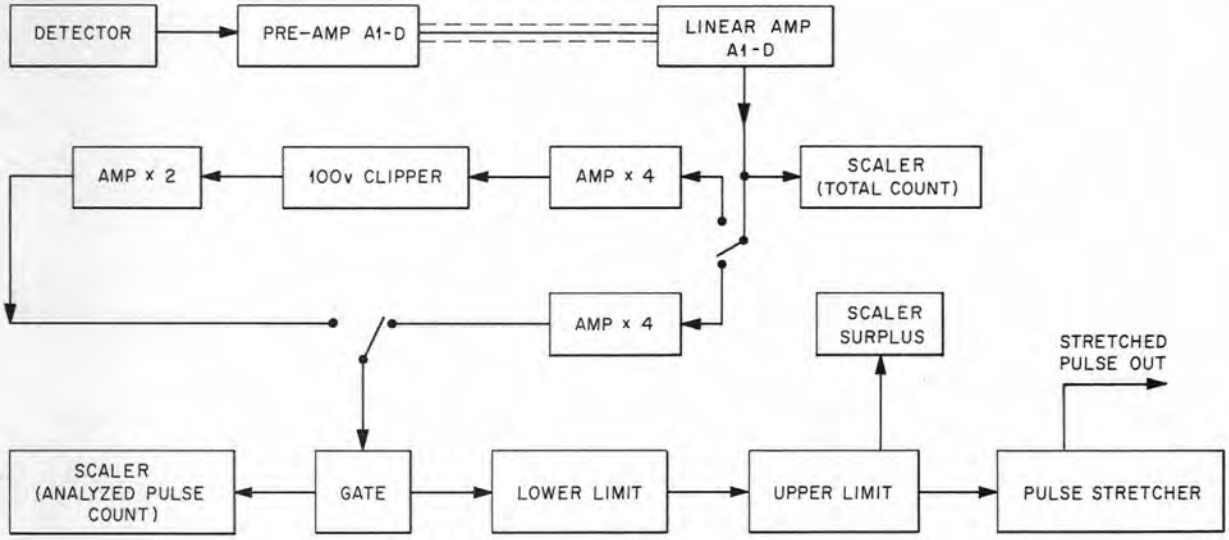

Fig. 9. Block Diagram of Analyzer Front End.

If a pulse is accepted by the lower limit, it is submitted to the upper limit, which is also adjustable from the analyzer panel. The upper limit determines the maximum pulse height that will be analyzed. If a pulse is accepted by the gate and the window, it charges a capacitor through a diode in the pulse stretcher, retaining the maximum pulse height for a period sufficiently long to allow the stretched pulse to be analyzed.

A precision pulser, Q-1066, is employed as a calibrating and testing source. This instrument is mounted in the analyzer rack for convenience in servicing. Panel space is provided in the rack for scalers to record the total input pulses, the analyzed pulses, and the surplus pulses, that is, those exceeding the upper limit. This information is generally used to estimate the precision of a pulse-height analysis.

IDENTITY OF FLUORESCENT- AND DELAYED-LIGHT EMISSION SPECTRA

J. B. Davidson W. A. Arnold[1]

The measurement of the emission spectra of both the prompt and delayed light from green plants has been completed and is being reported in the *Journal of General Physiology*. The best data were obtained with the use of an experimental red-sensitive type of photomultiplier tube furnished by Radio Corp. of America. This tube gave an improvement in resolution of about 2 over that of the previously used detector, which consisted of a CV-148 image tube viewed with a 5819 photomultiplier, and it gave an increase in sensitivity of several times over that of the CR-148-5819. The tube is of the end-window type, making it easily adaptable to the experiment.

As was the case with the CV-148 tube and others previously tried, cooling the tube with dry ice was essential in order to lower the dark current. It was found that the ratio of the signal to the average fluctuation in dark current could be improved by lowering the voltage on the photomultiplier. Best results were obtained with about 60 v per stage. Current from the photomultiplier was measured with a vibrating-reed electrometer. The collecting anode was connected to the input of the reed by a 10^{10}-ohm resistor and was connected to ground through a 0.0005-mfd condenser having a very high leakage resistance. The input of the reed was connected to the feedback lead through a 10^{11}-ohm resistor.

Used in this manner, the vibrating-reed electrometer measures the voltage drop across the 10^{11}-ohm resistance, while the time constant of the circuit is largely determined by the external resistance and capacity. The resulting time constant was found to be 14 sec. A long time constant was used in order to average out the fluctuation of the dark current. The output of the electrometer was continuously recorded by an Esterline-Angus recording ammeter. Experiments were made by alternately opening and closing the shutter of the monochromator at 1-min intervals. During the time that the shutter was closed the wavelength drum was indexed to the next setting. The average of the last half minute of each light period and dark period was taken from the curve made by the recording ammeter. The difference between the values in the light and the average of the preceding and following dark values was then used as the measure of light intensity.

In order to absorb any blue light that might be scattered through the monochromator during the experiments on fluorescence, two sheets of yellow cellophane were placed between the exit slit and the light detector. These two sheets transmit approximately 80% in the red band (600 mμ) and about 1% in the blue band (480 mμ). These filters were kept in place for all measurements except during the search for delayed light in the blue region. If the internal and exit slits of the monochromators are identical, the signal increases as the square of the slit width, and, as the slit width is increased, the intensity can be determined with a corresponding increase in accuracy. As the slit width is increased, however, the detailed structure of the spectra is "smeared out," thus making it more unlikely that a difference can be detected between the delayed light and fluorescence.

[1]Biology Division.

Therefore a slit width of 0.35 mm was decided on as the best compromise. This gave a signal at the peak of the delayed-light emission spectrum of 20 mv on the 10^{11}-ohm resistor. Roughly, this signal stands in relation to the dark-current fluctuations in about the same ratio as the width of the emission band stands to slit width; for example, at 700 mμ a slit width of 0.25 mm corresponds to 14 mμ.

After the emission spectrum for the delayed and fluorescent light was determined by the method just given, the emission spectrum of a standard lamp was measured in the same manner. The Bureau of Standards has determined the energy emitted per unit wavelength as a function of the wavelength for this lamp. For this experiment the intensity had to be reduced by a large factor for measurement. The standard lamp was placed about 50 cm from a wall which had the monochromator located on the opposite side. A hole cut in the wall was covered by aluminum foil in which there was a small pinhole. The light from this pinhole, after traveling a meter or so, was scattered by a block of magnesium carbonate. The scattered light was reflected into the entrance slit by clear glass. The readings made on the standard lamp were used to correct the data for the dispersion of the monochromator and for the sensitivity of the photomultiplier. If the signal at each wavelength of the delayed-light emission spectrum is divided by the signal determined for the standard lamp at that wavelength and is then multiplied by the energy emitted per unit wavelength by the standard lamp at that point, a number proportional to the energy emitted per unit wavelength by the *Chlorella* is obtained.

LINEAR COUNT-RATE METER (Q-1511)

F. M. Glass

The Q-1511 linear count-rate meter was designed to fulfill the growing demand for a reliable and more versatile count-rate meter. Since simplicity is usually a contributing factor to reliability, the circuitry in this instrument has been simplified wherever possible without compromising performance. The following specifications give a brief description of performance.

- Range: 200 counts/min full scale to 2×10^6 counts/min full scale
- Linearity: full-scale departure from true linearity less than ½%
- Accuracy: ±1% over the entire range
- Input sensitivity: 5 v for either positive or negative pulses
- Resolving time: 3.5 μsec
- Stability: zero drift, average ±1% in 1000 hr; calibration drift, less than ½% in 1000 hr in an air-conditioned room

The instrument has a range covered in five steps, a multiplying factor of 100, and a scale expander with a range of slightly greater than 2.

Calibration is provided in both counts per minute and counts per second. A 120-cycle calibration check is included with the calibration dial located on the instrument panel. A panel-mounted selector switch permits the selection of integrating condensers and is marked in terms of per cent of standard deviation.

Three special techniques are generally employed in the construction of a vacuum-tube voltmeter, which is the indicating circuit of the linear count-rate meter, when stability is the prime requisite. Either chopper amplifiers may be used, feed-back may be employed to stabilize a d-c amplifier circuit, or the sensitivity of the circuit may be decreased to the point where drift is negligible. Since the latter method entails less circuitry and was found to be suitable for this purpose, it was selected for the Q-1511 (see Fig. 10).

The circuit presented several problems that are worthy of mention. Since the integrating condenser in the count-rate circuit charges exponentially, it is desirable for the voltage across this condenser to be maintained at a very low level in order to obtain good linearity. As a result of the vacuum-tube voltmeter circuit having been made very insensitive, it was found to be impossible to maintain the voltage developed across the integrating condenser low enough for good linearity. However, linearity is regained by causing the voltage to appear very low to the pump circuit by

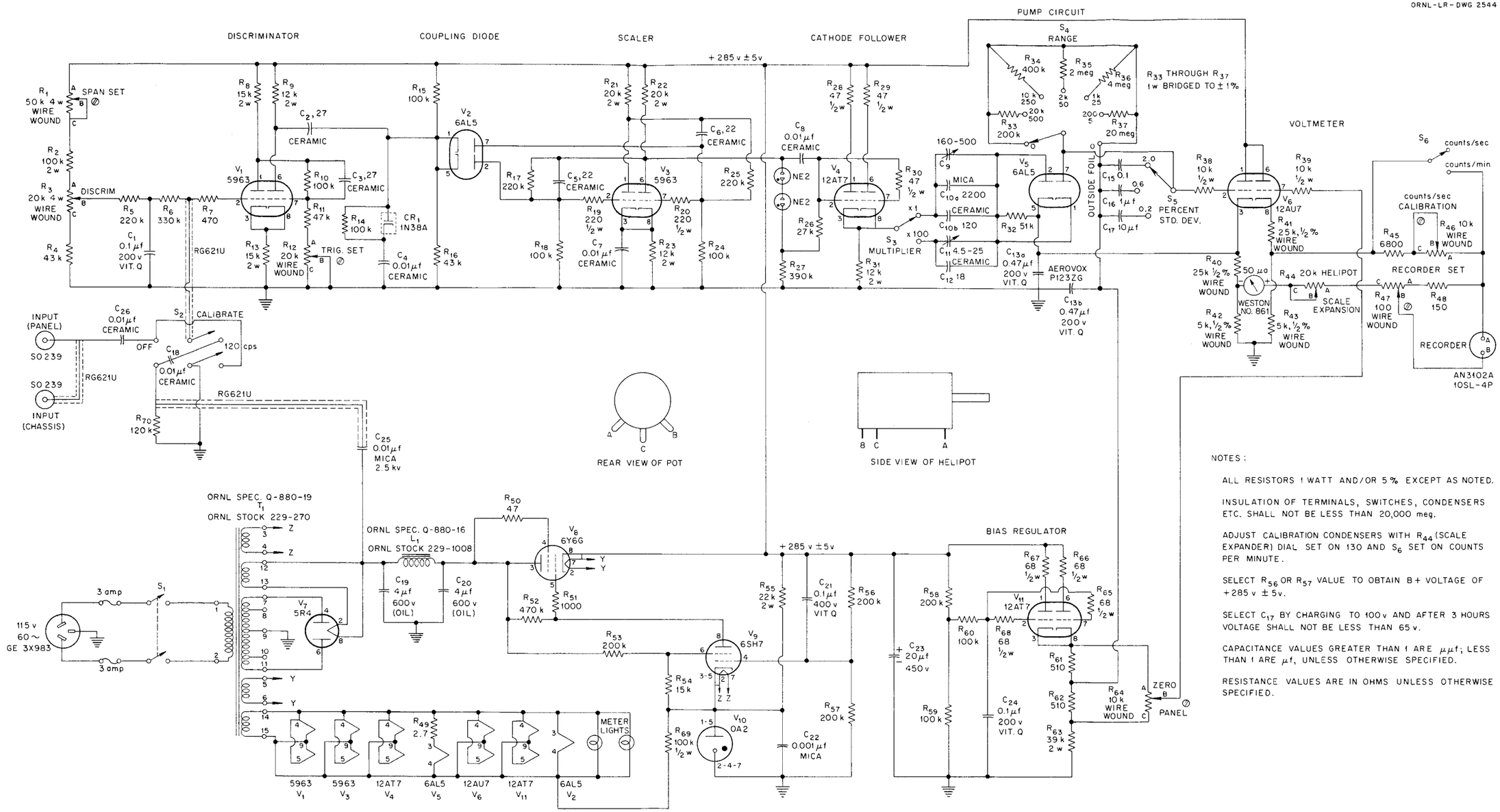

NOTES:

ALL RESISTORS 1 WATT AND/OR 5% EXCEPT AS NOTED.

INSULATION OF TERMINALS, SWITCHES, CONDENSERS ETC. SHALL NOT BE LESS THAN 20,000 meg.

ADJUST CALIBRATION CONDENSERS WITH R_{44} (SCALE EXPANDER) DIAL SET ON 130 AND S_6 SET ON COUNTS PER MINUTE.

SELECT R_{56} OR R_{57} VALUE TO OBTAIN B+ VOLTAGE OF +285 v ± 5v.

SELECT C_{17} BY CHARGING TO 100 v AND AFTER 3 HOURS VOLTAGE SHALL NOT BE LESS THAN 65 v.

CAPACITANCE VALUES GREATER THAN 1 ARE $\mu\mu f$; LESS THAN 1 ARE μf, UNLESS OTHERWISE SPECIFIED.

RESISTANCE VALUES ARE IN OHMS UNLESS OTHERWISE SPECIFIED.

Fig. 10. Circuit Diagram of Linear Count-Rate Meter.

employing the cathode of the vacuum-tube voltmeter to "boot-strap" the entire pump circuit. This technique gives good stability without sacrificing linearity.

It was found to be difficult to obtain the wide range in counting rate necessary for a general-purpose count-rate meter employing conventional circuitry. Decreasing the voltage sensitivity of the vacuum-tube-voltmeter circuit made the problem still more difficult. It was also found to be difficult to obtain sufficient power directly from a discriminator at low counting rates and at the same time maintain a low resolving time for the higher counting rates. To overcome this, the Q-1511 uses a scale of 2 and two separate coupling condensers between the driver and the pump circuit. By switching these condensers, a factor of 100 in sensitivity is achieved while good resolution is still being maintained for any given counting rate. The scale of 2 is coupled by means of a compensated-gas-tube-coupling network to a cathode follower, which, in turn, drives the pump circuit. This tube is always operating on a 50% duty cycle, another advantage in using a scale of 2.

Although high-value cathode resistors are used in the vacuum-tube-voltmeter circuit, it should be noted that they are not returned to a negative potential. By using the cathode follower to pull the pump circuit and other grid circuits of the balanced-bridge vacuum-tube-voltmeter up to +100 v, the need for a negative supply is eliminated, and since any drift or flicker noise in the cathode follower is applied to both grids of the vacuum-tube-voltmeter circuit, the net result is essentially zero.

The discriminator used in this instrument was not intended to be used as a pulse-height measuring device. It is merely a convenient method for switching from a negative to a positive input and for setting the sensitivity above the noise level.

8000-CYCLE OSCILLATOR (Q-1515)

W. T. Adams

In making magnetic-susceptibility measurements, a microbalance is used which utilizes a microformer and a phase-sensitive detector. The microformer and phase-sensitive detector must be supplied with an alternating voltage whose amplitude and frequency stability are of the order of 0.1%; the frequency required is approximately 8000 cps.

The Q-1515 8000-cycle oscillator was designed to fulfill these requirements. A 5693 pentode and a 6Y6 as a cathode follower constitute the oscillator. The other circuitry is necessary to provide amplitude stability, frequency stability, and low output impedance.

Amplitude stability is achieved by inserting a 6SK7 variable-mu pentode in series with the regenerative feedback path from the 6Y6 cathode to the 5693 grid. The 6SK7 grid bias consists of the filtered peaks clipped from the positive part of the oscillator output. The clipping point is held constant with a VR-75 so that the peak-to-peak voltage is then approximately 150 v and is of the same order of stability as that of the VR-75.

Frequency stability is obtained by adding a degenerative path which includes a parallel T filter. The filter has a null at 8000 cycles, and, at this frequency, the minimum degenerative signal gets through. On either side of null, degeneration is present and thus the oscillator seeks the null frequency as an operating point. By using silvered-mica condensers and wire-wound precision resistors, the stability of the parallel T filter is adequate.

Output voltage from the oscillator is fed through a 6AG7 cathode follower in order to isolate the load from the oscillator and to provide a low output impedance. The voltage output is adjusted to 28 v rms at the 6AG7 cathode. An additional output at 7 v is provided from a 4:1 isolating transformer. The 7-v output supplies the microformer field and the 28-v output supplies the phase-sensitive detector. The 7-v output impedance is about 8 ohms.

The voltage change on the 7-v output, due to a change in load impedance caused by changing the microformer core position, is of the order of 0.1% for as much as a 10% change in impedance. The frequency change is of the order of 0.001% for the same load change. Overnight frequency stability is of the order of 0.02%.

The unit has been in operation for about six months, and performance is quite satisfactory.

REGULATED NEGATIVE-VOLTAGE POWER SUPPLY

B. C. Behr

The need for a stable negative high-voltage power supply for use in model Q-1520 scintillation-counting techniques where stability with constant load is the prime requisite led to the design of the Q-1520.

Specifications for the Q-1520 are as follows:

Output voltage	600 to 1550, continuously variable where load current equals 0.5 ma or more
Maximum load current	1 ma
Regulation	±0.5% with 95 to 125 v input
Stability	0.1% per week after initial warm-up

The output stability was achieved by cascading eighteen 5651 voltage-reference tubes driven from a constant high-voltage source. Voltage output is selected by a panel-mounted switch, and limited variance is obtained by changing the internal impedance of the supply with a precision series potentiometer.

Since the simplicity of the circuit tends to promote greater reliability and the voltage range is adequate for use with the newer Dumont, as well as RCA photomultipliers, it is felt that this type of supply will be a valuable aid in scintillation-counter experiments.

SEQUENCE INTERVAL TIMER (Q-1527)

F. M. Glass

The Q-1527 sequence interval timer was designed for use in studies being conducted of the gamma-ray spectrum of materials that have been irradiated in a reactor. One of the primary functions of this instrument is to automatically open and close several solenoid valves in their proper sequence. These valves are used to control the gas pressure to drive a sample "rabbit" through the reactor.

The sequence timer is also used to control the electronic gates in the counting and monitoring instruments. The timing sequence is as follows. First, the "in" control valves are opened by the timer, admitting the sample to the reactor by gas pressure against the rabbit which contains the sample to be irradiated. At this instant a variable time delay that determines the radiation time of the sample begins its cycle (see Fig. 11). At the end of this sequence the "out" valves are opened and the sample is driven out of the reactor and into the counting chamber. Simultaneously, two more timing sequences are started and an electronic gate is opened, permitting the monitor to start counting the sample. One of the two timing sequences, set at 32 sec, closes the monitor gate at the end of the period. The other sequence, which is variable from 1 to 64 sec, opens another electronic gate that controls two 20-channel analyzers. At this point a third timing sequence is started (also variable from 1 to 64 sec). This timer controls the counting timer by closing the gate on both 20-channel analyzers, thus concluding one cycling sequence of the timer.

The circuit of the sequence interval timer consists of the following: three scales of 64 tapped by a selector switch at each scale of 2, a Phantastron oscillator having two frequencies of one cycle and two cycles, a series of electronic gates, a regulated power supply, and two valve-closing relays. Two relays are employed in this circuit, and they are necessary only to furnish greater power-handling capacity. All other functions of the device are controlled by electronic gates, thus eliminating the error that was caused by variations in drop-out and pick-up time of relay contacts.

A mechanical register is also included in the design of the instrument to indicate the number of timing cycles completed.

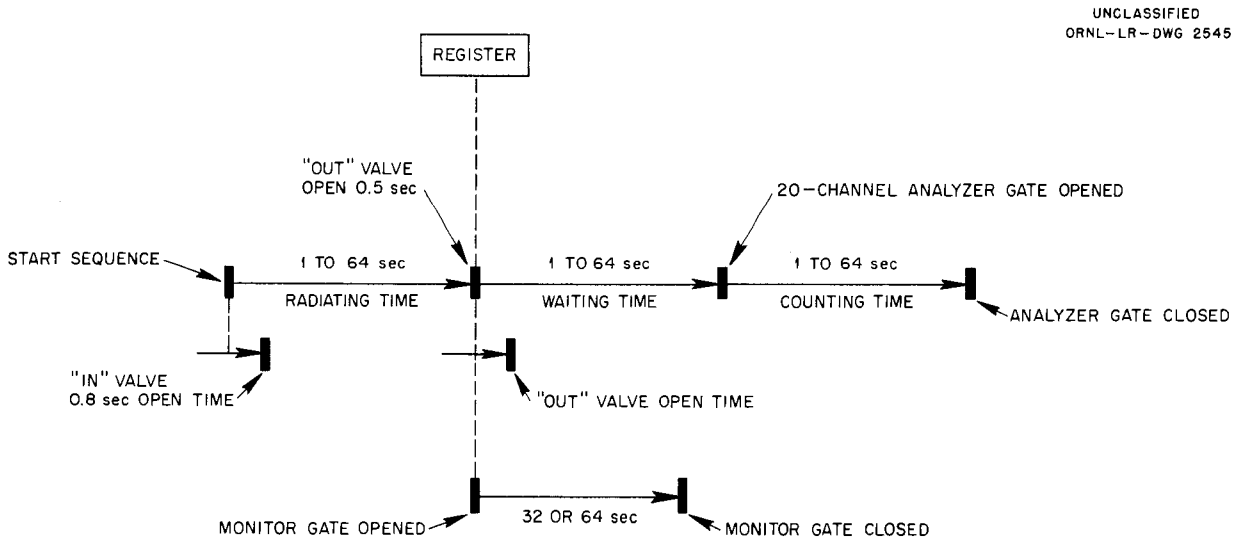

Fig. 11. Timing Sequence Diagram.

TEMPERATURE-CONTROL UNITS FOR MOLECULAR-BEAM STUDIES

J. F. Potts, Jr. S. Datz

The temperature controls to be described are provided in support of chemical-kinetics research in a high-vacuum system, wherein a small high-temperature furnace operating in the range of 250°C contains a quantity of potassium which is boiled off through a second small furnace operating in the range of 250 to 600°C. The first furnace determines the pressure (density), and the second furnace determines the temperature (velocity) of the potassium beam, which then escapes through a collimating mechanism and is directed toward a second beam that is at right angles to it. This second beam consists of hydrogen bromide which has been influenced by two low-temperature furnaces in a similar manner. By controlling the density and velocity of the reacting beams and by employing a suitable detector of the reaction products and their energy-space distribution, an understanding of the kinetics of these reactions may be obtained. For calibrating the detector, a second high-temperature furnace (250 to 900°C) containing potassium bromide is used without the hydrogen bromide cross beam. The detector, which is a surface-ionization gage, is connected to a vibrating-condenser electrometer and a bucking potentiometer. The output of the electrometer is connected to a potentiometer-recorder, thus recording the intensity of the molecular beam which has impinged on the hot filament of this surface-ionization gage.

The potassium and potassium bromide density furnaces are optionally controlled by a single system as follows. A stable precision potentiometer suppresses the output of a Chromel-Alumel thermocouple to within 1 mv, the residual being introduced to a 1-mv-span null-balance potentiometer-recorder-controller. The control consists of pneumatic proportional-band, reset-rate, and derivative adjustments. A diaphragm motor operating from the controller positions an autotransformer to regulate energy to the sample (potassium or potassium bromide) heater. The maximum control span is set by a manually adjusted autotransformer that regulates the control transformer. A second manually adjustable autotransformer serves to supply a base heat energy in series with the controlled energy. Except for a brief time when oil particles in the pneumatic system limited its controllability, this system has consistently maintained control to within ±0.05°C at from 200 to 800°C.

The potassium velocity furnace consists of a small block of nickel with a devious route for the gas and has a number of series resistance heaters inserted in the block along with a specially constructed platinum resistance thermometer. The resistance thermometer and heaters are connected into a Wheatstone bridge detector-controller circuit (L & N Electromax) which is a pulse-time type of control incorporating variable proportional band, reset rate, and impulse rate.

The hydrogen bromide barostat is controlled by maintaining a small copper container (about 1 in. dia × 2 in. length) at a constant temperature, to within 0.025°K, from 100 to 250°K. This has been accomplished by providing a heat leak from the copper container to a liquid-nitrogen bath and elevating the temperature above this point with a small resistance heater. A small bonded resistance element (Baldwin T-14 element) is connected into an a-c Wheatstone bridge detector-controller circuit of the above type. This system has satisfactorily maintained a set temperature to within 0.3°C of the above range. The low-temperature hydrogen bromide velocity control is effected in a manner similar to that of the barostat.

METALLURGY CREEP-TEST LABORATORY EXPANSION AND MODIFICATION

J. L. Horton

An expansion is under way to provide six additional liquid-metal creep-test machines, four dead-load-test machines, and eight tube-burst machines to the creep-test facilities located in the Metallurgy Division Building 3019. This will increase the number of machines from 10 to 28.

For this expansion, 18 Leeds & Northrup Speedomax recording controllers with associated duration-adjusting type electric controllers are being installed for temperature control. The new panel board, to be interconnected with the previous one by means of thermocouple and control-power patch-panels, will provide rapid interchangeability between any of the 20 controllers on any of the test machines, provide a safeguard against instrument failure, and provide ease of maintenance.

A 100-point L & N Speedomax precision indicator is included on the new panel board so that control and auxiliary thermocouples on all test machines, both old and new, can be read. A 12-point L & N Speedomax recorder is provided for recording auxiliary thermocouple temperatures.

Leeds & Northrup Speedomax recording controllers identical to the ones on the new panel board are on order to replace the 10 L & N Model C Micromax nonrecording controllers now being used on the old panel. The old-model mechanical controllers have proved to be rather unsatisfactory for the degree of temperature control desired and have been costly maintenance-wise. The new controllers will improve the quality of control, provide a continuous temperature record, and give complete uniformity as to the type of controllers used.

FLOW RECORDER-SAMPLER FOR 4500-AREA LIQUID WASTE

T. M. Gayle

A new type of liquid-waste monitor-sampler has been installed and operated in the 4500 Area. This monitor records and integrates the flow rate of liquid process waste from the area and takes a sample that is proportional to the flow rate.

The new monitor uses a conventional V-notch weir for flow metering but employs a pneumatic (rather than mechanical) method of liquid-level detection. The recording-integrating instrument, manufactured by the Bristol Co., provides a chart that is linear with flow rate. The integrator in the instrument is of the time-interval type. For each 15-sec interval a synchronous motor is allowed to drive a mechanical counter during a period of time that is proportional to the flow rate. By employing a second synchronous motor to drive a small displacement pump, driven from the integrator motor-switching network, a sample that is proportional to the flow is obtained. A tubing-type pump has been found to be entirely satisfactory for this service. The unit now in service takes a sample of approximately 1 part in 50,000.

The entire recorder-integrator and sampling system is housed in a standard six-deck rack cabinet which has been treated for outdoor service. The unit is relatively portable and can be easily disconnected and moved to new locations.

TEST OF PRECISION LOW-PRESSURE GAS REGULATORS

T. M. Gayle

Five absolute-pressure regulators were built for ORNL by Moore Products Co. of Philadelphia. The regulators are to be used principally for the precise control of argon pressure on dosimeters and ion chambers. Regulation to within ±1.0 mm of Hg under all conditions at a level of approximately 770 mm was desired. It was also desired that the regulators have as low consumption as possible, consistent with the required regulation. The requirements written in the order stated that regulation should be held to ±1.0 mm, while flow consumption must be less than 100 cc/min.

While all five of the regulators met the written requirements, three of them gave exceptionally good control. Typical of the performance of these units is the curve shown in Fig. 12, in which regulation in millimeters of Hg is plotted vs flow rate in cc/min. The regulation shown is against a downstream upset of 35 mm, which simulates more than the greatest atmospheric change that could occur on the outlet of the ion chamber. In the flow range of 10 to 30 cc/min, change in measured pressure was only 0.25 mm. The chart segments shown in Fig. 13 represent stability over a one-

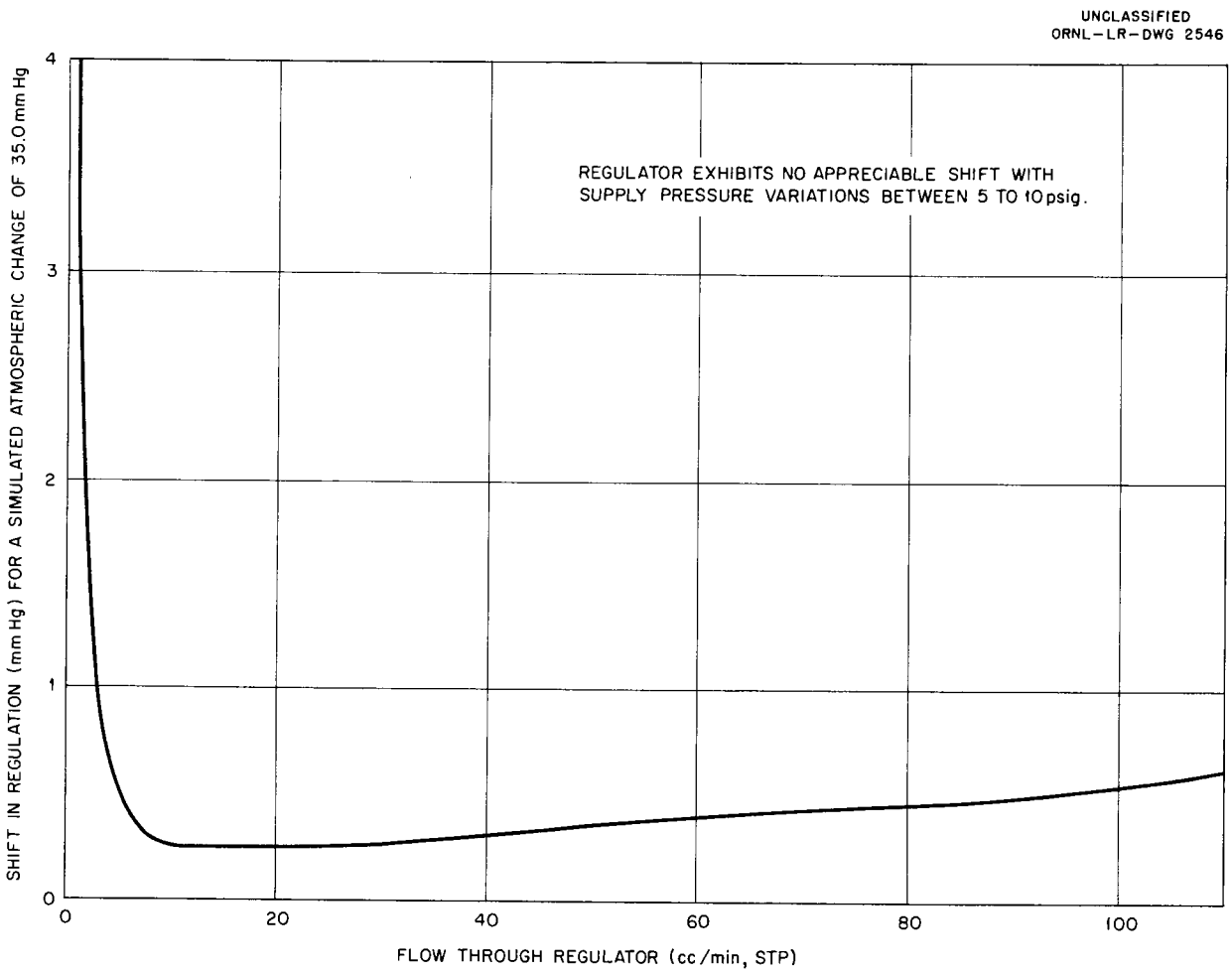

Fig. 12. Operational Test of Regulator No. 2.

week period with normally changing atmospheric pressure.

The other two regulators, while technically meeting specifications, did not approach the first three units in precision of regulation or low gas consumption. The manufacturer has agreed to rework these regulators on a no-charge basis.

UNCLASSIFIED
ORNL-LR-DWG 2547

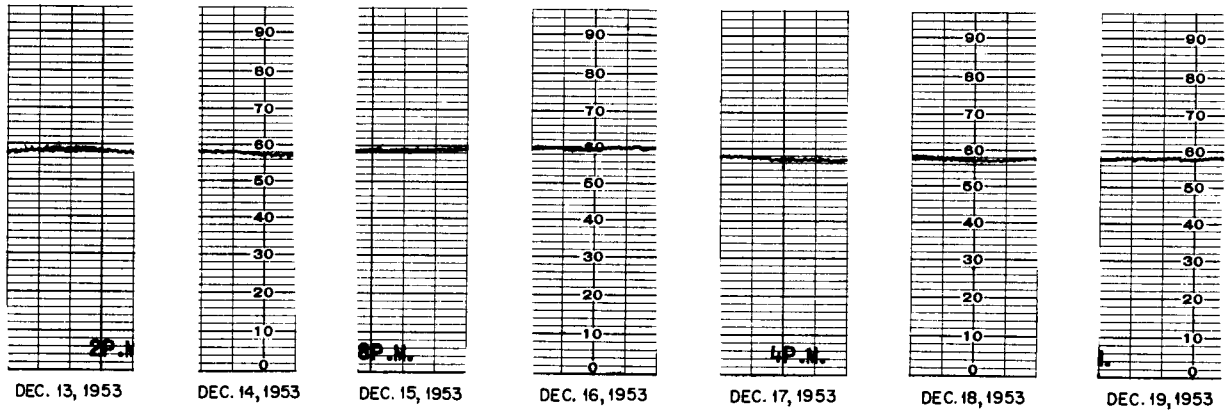

0 TO 100% OF CHART = 0 TO 10 in. H_2O OR
0 TO 18.6 mm Hg
ABSOLUTE RANGE: ~ 765 TO 783.6 mm Hg
FLOW RATE: ~ 40 cc/min

Fig. 13. Stability Test of Regulator No. 2.

PRELIMINARY REPORT ON HIGH-TEMPERATURE ADIABATIC CALORIMETER

J. F. Potts, Jr.

The instrumentation and controls for a high-temperature adiabatic calorimeter, which was designed for the determination of specific heats of fused salts from ambient temperature to 1000°C, are in the intermediate stages of completion.

The calorimeter consists of a right-circular-cylinder type of sample container surrounded by an electrically heated shield. The adiabatic-shield temperature is controlled from a platinum-rhodium–platinum differential thermocouple. To maintain the shield temperature equal to that of the sample, the output of the thermocouple is introduced into a high-gain high-stability breaker amplifier which, in turn, feeds into a potentiometer-recorder-controller that operates a motor-autotransformer system to modulate power to the shield heater. The system is potentially capable of maintaining the shield temperature equal to that of the sample container to within 0.01°C.

One particularly difficult problem in connection with this work is that of measuring the differential temperature between the sample and shield to 0.005°C (5×10^{-8} v) in the presence of possible wire-surface contamination, local cold-working, electromagnetic fields, etc., in addition to making sure that the measuring points are typical of the average surface conditions.

A heated shield surrounds the adiabatic shield and is controlled similarly from a differential thermocouple that is connected between the adiabatic shield and the second shield. The second shield temperature is deliberately maintained different from that of the adiabatic shield in order to assure positive control to provide a means of second-derivative control. For determining the specific heat of a specimen by the step method, in addition to maintaining vacuum adiabatic conditions, it is necessary to know the amount of energy causing the temperature rise (specific heat equals calories per gram per degree change in temperature).

Ideally, a known power for a known period of time would be measured. For this a constant-current source is employed (modified from a commercial constant-voltage source) and the voltage drop across the sample heater is accurately measured. To make this measurement, the drop across the heater is bucked out to within 1% with a standard potentiometer. The last 1% is recorded with a potentiometer recorder, giving a record of ±0.005% resolution and an over-all accuracy of ±0.01%. The bucking potentiometer for this application was reported as Q-1489 in a previous report.[1] The time interval is measured with a synchronous timer, driven by a standard 60-cps fork.

[1] J. F. Potts, Jr., *Instrumentation and Controls Semiann. Prog. Rep. July 31, 1953*, ORNL-1694, p 13.

VARIABLE-RATE PULSE SIMULATOR

F. M. Glass

An instrument was developed specifically for checking the gain characteristics of amplifiers and associated counting equipment used in conjunction with the 20-channel analyzers. The device is designed as a special pulse generator to simulate pulses from a sodium iodide crystal and photomultiplier tube that has a time constant of 4.5 μsec in the anode circuit.

The basic circuit is a Phantastron oscillator followed by appropriate stabilizing and pulse-shaping circuits with a variable pulsing frequency from 100 cps to 50 kc in two ranges. The pulser has a rise time of approximately 0.2 μsec with variable output amplitude from 0 to 4 v, feeding into a 50-ohm load. The output has been stabilized and does not change with variations of repetition rate over the entire range of the instrument.

ACCURATE LOGARITHMIC COUNT-RATE METER

W. T. Adams

There are a number of applications for which a continuously presented count-rate indication is to be preferred to methods of obtaining count rate from scaling circuits. Count-rate meters, however, usually possess inherent inaccuracy and instability beyond those allowable for many experiments. Linear count-rate meters have been built with an accuracy of $\pm 1\%$ of the full-scale reading, but the accuracy is reduced, at less than a full-scale reading, by a proportional amount. Logarithmic count-rate meters, on the other hand, have uniform accuracy over the entire range.

The Q-1454A logarithmic count-rate meter has been designed to meet the requirements for an accurate, stable, wide-range instrument which presents a continuous indication of count rate. This design is based on an instrument developed earlier at the Atomic Energy Research establishment at Harwell, England, by E. H. Cooke-Yarborough and associates.[1] Changes that have been made are for the purpose of improving the stability and accuracy, providing for self-contained calibration signals, and making easily available a variety of ranges and sensitivities.

The logarithmic count-rate circuit consists of a series of diode pump circuits like the one shown in Fig. 14. A rectangular wave whose amplitude is V is fed to the coupling condenser C_c. The condenser C_c charges through V_1 and discharges through V_2 into the integrating condenser C_t once each cycle. The charge placed on C_t each cycle is equal to $[C_c C_t/(C_c + C_t)](V - v)$, where v is the voltage already on C_t. Since C_t is much greater than C_c, the charge deposited per cycle may be written: $q = C_c(V - v)$. The current going into C_t is therefore $NC_c(V - v)$. At equilibrium, the current going into C_t equals the current flowing through the leak resistor R. Therefore,

$$NC_c(V - v) = \frac{v}{R} ,$$

$$NC_cV - NC_cv = \frac{v}{R} ,$$

$$v\left(\frac{1}{R} + NC_c\right) = NC_cV ,$$

$$v = \frac{NC_cV}{\frac{1}{R} + NC_c} ,$$

$$v = \frac{NRC_c}{1 + NRC_c} V .$$

If $RC_c = T$, the time constant of this particular

[1] E. H. Cooke-Yarborough and E. W. Pulsford, *Proc. Inst. Elec. Engrs.* (*London*) 98, Part II, 196 (1951).

UNCLASSIFIED
ORNL-LR-DWG 2643

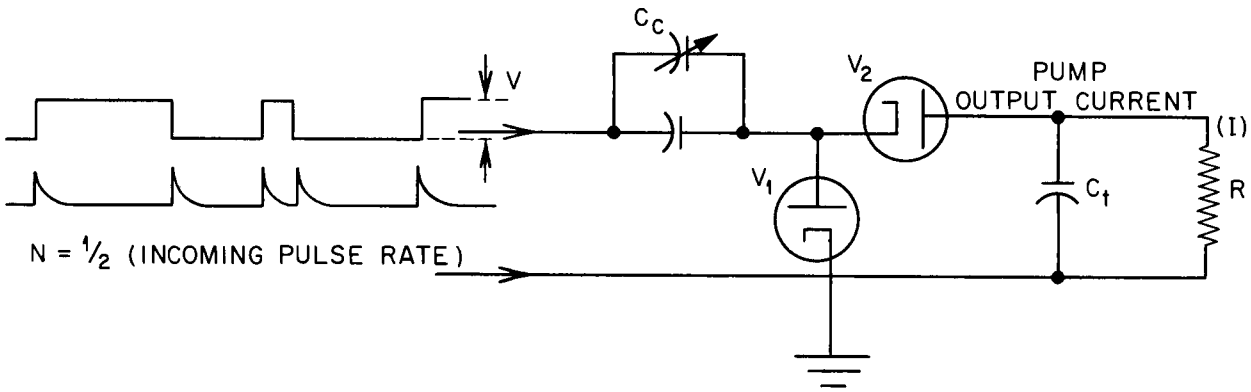

Fig. 14. Pump Circuit.

pump, then

$$v = \frac{NT}{1 + NT} V$$

and

$$i = \frac{NT}{1 + NT} \frac{V}{R} .$$

If the values of R for a series of pumps are large and equal and if the products RC_c differ by a factor of 10 from pump to pump, then I, the sum of the currents $[i = NT_n/(2 + NT_n)]$, is very nearly equal to log N. For a decade change in count rate from N to $10N$, the current I changes to $I + V/R$. Over any one decade there will be a slight departure, which does not exceed 0.25%, from a logarithmic relation. When a finite number of pumps are used, there will be end-effect errors. These end-effect errors may be partially compensated for by increasing V for the end pumps. A 15% increase reduces the error to zero at about 0.43 ($1/T$ min), where T min is the time constant of the last pump.

The total range of this logarithmic count-rate meter is five decades, from 10 counts/min to 10^6 counts/min. This requires six diode pump circuits. The value of R in each pump circuit is 10 megohms. Therefore, each pump acts as a current source, and all pumps may be connected in parallel so that the output current is the sum of the individual currents. The output current I is given by the following relation:

$$\frac{NT_n}{1 + NT_n} \frac{V}{R} + K ,$$

where N is in cycles per second, T_n is the time constant of the nth pump, and K is a constant.

The only parts of this function not involving rather stable circuit elements (resistors and condensers) are the rectangular wave voltage V and the constant K. The constant K is a fixed current which fixes the lower limit of the instrument; that is, it causes 10 counts/min to correspond to zero deflection.

The constant K is obtained from the $B+$ supply and is thus quite stable. The rectangular wave V is obtained from the input pulses by means of a scale-of-two circuit. Hence, one complete cycle requires two input pulses, and the value of N referred to above is equal to one-half the input count rate in pulses per second. In order for the magnitude of the scaler output V to be independent of tube characteristics, the rectangular wave is clipped to a fixed value determined by the bias on the diode clippers. The bias is obtained from a bleeder across the $B+$ supply, and therefore the magnitude of V is as stable as the $B+$ supply. To further ensure that the magnitude of V is constant, it is supplied to the pumps through a cathode follower so that the clipping circuit is isolated from the pumps.

The magnitude of V is approximately 125 v, and the maximum current per pump is 12.5 μa. These

currents are summed and passed through a 50-μa meter and a 1000-ohm resistor string. Each is shunted by an adjustable resistor for "span" adjustment so that the resultant current is 10 μa per pump and thus 10 μa per decade. A 10-mv recorder across the 1000-ohm resistor will give a full-scale indication for one decade. To obtain sensitivities of two, three, four, and five decades full scale, the recorder is connected at one-half, one-third, one-fourth, and one-fifth of the 1000-ohm resistance. The lower end of the recorder may be made to correspond to 10, 10^2, 10^3, etc. counts/min by feeding in a current of opposite polarity to the pump current of magnitude 10, 20, 30, etc. μa. Provision is made for doing this on the front panel with a "decade suppressed" switch.

To eliminate inaccuracies in the values of the various pump time constants, provision is made for adjusting each pump individually. To aid in calibration, six frequencies are available in the instrument; they are obtained by doubling and scaling the 60-cycle line frequency and are 360, 720, 1440, 3600, 7200, and 14,400 counts/min. Provision is made for using an external signal source for calibration purposes. Since a Berkeley decade scaler unit is included in the calibration circuit, a signal is directly available at the test frequency or at one-tenth of this frequency. This greatly facilitates lining the instrument in decade increments.

At a sensitivity of one decade full scale, the accuracy is ±2% over the entire decade, and in the vicinity of a calibration point it is better than 1%. On ranges greater than one decade full scale, the accuracy is correspondingly reduced. Above 5×10^4 counts/min and below 20 counts/min, the end effects introduce an error which approaches 6% at the extreme ends. On overnight runs, the drift is less than 1%.

MECHANICAL-VIBRATION STUDIES

J. F. Potts, Jr.

During the current period, four mechanical-vibration problems have been analyzed. These problems were studied with the aid of electromagnetic vibration pickups, a light-beam vibrometer, a stroboscope, a low-frequency oscillator, and a cathode-ray oscilloscope. The light vibrometer was used for survey work, whereas the electromagnetic pickup and associated equipment were used for quantitative measurement. The following work concerning vibration problems was done:

1. A study was made to determine the optimum location for a microchemical beam-balance in a room that is frequently affected by severe shock and vibration. A location was found wherein no special isolation was necessary.

2. A high-sensitivity polarograph assembly exhibited erratic behavior that impaired the accuracy of analytical determinations when analyses were being performed on certain types of solutions. The erratic behavior was traced to vibration. A vibration-isolating pad was designed that improved conditions significantly.

3. Vibration studies were made in the northeast corner of the basement of Building 3025. These tests were made primarily to determine the vibrational effect of two 15-hp air-conditioning compressors on a precision electromechanical balance and associated electromagnet located in a room adjacent to the air-conditioning equipment. The findings indicate that the existing compressors, blowers, and air cabinets produce negligible effect on the magnet and balance in comparison with vibration induced from other sources such as the motors, fans, etc. in the 3039 Area (off-gas stack area). This makes feasible the installation of additional air-conditioning equipment, similarly isolated, adjacent to the existing equipment. Further studies of the electromagnet indicated that considerable improvement could be made in its isolating pads. This will be done in the near future.

4. Excessive vibration and noise in Building 3025 were traced to the fan-motor assembly of an air conditioner. Tests indicated that the certifugal fan was resonant at the existing rotational speed. The vibration was reduced by a factor of 10 by changing the fan speed by 25%.

RECORDING INSTRUMENTATION FOR WELDING OPERATIONS

G. Ritscher

A recording instrument rack was assembled for the Welding Laboratory of the Metallurgy Division for measuring potentials and currents of arc-welding apparatus. Versatility and ease of operation were both important factors; so all ranges were made changeable by selector switch.

The top panel includes an Esterline-Angus recording millivoltmeter, shunts of ranges 25, 50, 100, 250, and 500 amp, and a switch for changing all shunt connections at the same time. Also included was a contact for de-energizing the welding apparatus should an overload occur.

The second panel includes a two-range Esterline-Angus recording voltmeter with a switch for selecting the 100- or the 50-v range.

Mounted on a third panel is a timer for controlling welding operations.

The panels were mounted in a standard six-deck relay rack cabinet which is fitted with casters for convenience in moving.