UNCLASSIFIED

CENTRAL RESEARCH LIBRARY
DOCUMENT COLLECTION

MARTIN MARIETTA ENERGY SYSTEMS LIBRARIES
3 4456 0349504 6

ORNL 1572
Instrumentation

4

THE HRE SIMULATOR

An Analog Computer for Solving the Kinetic Equations of a Homogeneous Reactor

D. M. Collier L. A. Meeks J. P. Palmer

CENTRAL RESEARCH LIBRARY
DOCUMENT COLLECTION

LIBRARY LOAN COPY

DO NOT TRANSFER TO ANOTHER PERSON

If you wish someone else to see this document, send in name with document and the library will arrange a loan.

OAK RIDGE NATIONAL LABORATORY
OPERATED BY
CARBIDE AND CARBON CHEMICALS COMPANY
A DIVISION OF UNION CARBIDE AND CARBON CORPORATION
UCC
POST OFFICE BOX P
OAK RIDGE, TENNESSEE

UNCLASSIFIED

ORNL-1572

Copy No 4

Contract No W 7405 eng 26

THE HRE SIMULATOR

An Analog Computer for Solving the Kinetic Equations of a Homogeneous Reactor

D M Collier L A Meeks J P Palmer

DATE ISSUED

SEP 13 1954

OAK RIDGE NATIONAL LABORATORY
Operated by
CARBIDE AND CARBON CHEMICALS COMPANY
A Division of Union Carbide and Carbon Corporation
Post Office Box P
Oak Ridge Tennessee

3 4456 0349504 6

INTERNAL DISTRIBUTION

1 C E Center
2 Biology Library
3 Health Physics Library
4 5 Central Research Library
6 Reactor Experimental Engineering Library
7 11 Laboratory Records Department
12 Laboratory Records ORNL R C
13 C E Larson
14 L B Emlet (K 25)
15 J P Murray (Y 12)
16 A M Weinberg
17 E H Taylor
18 E D Shipley
19 C S Harrill
20 F C VonderLage
21 C P Keim
22 J H Frye Jr
23 R S Livingston
24 W H Jordan
25 J A Swartout
26 S C Lind
27 F L Culler
28 A H Snell
29 A Hollaender
30 M T Kelley
31 G H Clewett
32 K Z Morgan
33 T A Lincoln
34 A S Householder
35 C E Winters
36 D W Cardwell
37 J A Lane
38 E M King
39 W J Ladniak
40 D D Cowen
41 M J Skinner
42 S J Cromer
43 C J Borkowski
44 P M Reyling
45 G C Williams
46 E P Epler
47 58 D M Collier
59 70 L A Meeks

EXTERNAL DISTRIBUTION

71 J P Palmer Brookhaven National Laboratory
72 73 Curtis Wright Corporation Wright Aeronautical Division
74 Division of Research and Medicine AEC ORO
75 314 Given distribution as shown in TID 4500 under Instrumentation category

DISTRIBUTION PAGE TO BE REMOVED IF REPORT IS GIVEN PUBLIC DISTRIBUTION

CONTENTS

Chapter 1
INTRODUCTION

THE REACTOR EQUATIONS 1

SOLVING THE EQUATIONS 2

HRE PROBLEMS INVESTIGATED 3

Chapter 2
THE SIMULATOR

MODIFYING THE REACTOR EQUATIONS 5

BASIC NETWORKS 5
- Steam Temperature Analogy 5
- Reactor Temperature Analogy 8
- Reactor Power Analogy 9
- Summary of Coefficient Values 11

THE D C AMPLIFIER 13

THE MULTIPLIER 15

Chapter 3
COMPUTER RESULTS

CALIBRATION 21

SOLUTIONS FOR SEVERAL HRE PROBLEMS 23
- Dynamic Response to a Positive Step Change in Excess Reactivity Coefficient 23
- Ratio of Peak Power to Initial Power as a Function of Excess Reactivity 27
- Dynamic Response to Sudden Decrease in Power Demand 27
- Ratio of Peak Power to Initial Power as a Function of Steam Temperature Drop 30

SUMMARY OF EXPERIMENTAL RESULTS 31

APPENDIX 34

ABSTRACT

The kinetic equations which express reactor power and temperature as functions of time have been derived and coefficients appropriate to the Homogeneous Reactor Experiment have been evaluated These equations are a system of eight simultaneous differential equations one of which is nonlinear Since the equations are not readily solvable by any of the usual analytical methods an electronic analog computer has been developed to solve them for various conditions of operation Because the computer is to be used for the training of operating personnel as well as for experimental purposes it has been necessary to design the device without expansion of the time scale The computer thus follows in the same time periods excursions which are analogous to those encountered in the operation of the reactor

The essential components of the computer include a stable high gain d c amplifier and an electronic multiplier For reliable drift free operation a differential system is used The amplifier has a maximum output of ±10 ma at ±100 volts a differential drift of less than 1 mv referred to the input and a gain of over 20 000 In the electronic multiplier one variable can cover the range from 1 to 100 volts while the other variable has a usable range of 5 to 75 volts Both variables can change at any rate up to 100 cps without causing more than a 2% error in the product The multiplier output is linear to within 5% over the range from 0 06 to 20 volts

Several conditions of operation for the HRE were investigated The primary concern is whether the nuclear system is stable for various normal perturbations and for some unusual ones In every case investigated the reactor proved to be quite stable

THE HRE SIMULATOR

An Analog Computer for Solving the Kinetic Equations of a Homogeneous Reactor

Chapter 1
INTRODUCTION

A reactor should in addition to performing the function for which it is designed provide adequate protection against the radiation hazards of operation The principal danger associated with an operating reactor is that an excessively high neutron power may develop High power may cause high pressures and overheating of reactor parts with consequent damage to the reactor and possibly with danger to personnel in the vicinity

THE REACTOR EQUATIONS

The kinetic equations which describe the gross variations in reactor power and temperature as functions of time have been derived for the general power reactor (cf for example refs 1 2 and 3) In the general case the effect of temperature upon the reactor must be considered Temperature changes in a reactor affect its reactivity in two principal ways namely as density effects and as nuclear effects In any event the effect of temperature upon reactivity is so complex that no one generalization for all reactors is worthwhile

In the case of the Homogeneous Reactor Experiment (HRE) the temperature coefficient of reactivity results primarily from the effects of temperature upon density of the fuel so the kinetic equations are expected to be

$$(1)\quad \frac{dP}{dt} = \left[\delta - \sum_{=1}^{5} \beta - \alpha\left(\theta_r - \theta_{r_0}\right)\right]\frac{P}{\tau} + \sum_{=1}^{5} \gamma \lambda K$$

$$(2)\quad \frac{dK_i}{dt} = -\lambda_i K_i + \frac{\beta_i}{\tau} P \qquad i = 1\ 2\ 3\ 4\ 5$$

$$(3)\quad b\frac{d\theta_r}{dt} = P - \alpha(\theta\ - \theta\ )$$

$$(4)\quad g\frac{d\theta}{dt} = \alpha(\theta_r - \theta_s) - P_0$$

where

P = reactor power level (megawatts) as a function of time

t = time (sec)

δ = excess reactivity coefficient

$\sum_{=1}^{5} \beta_i$ = total delayed neutron fraction = 0 00762

α = temperature coefficient of reactivity = 0 00081/°C

θ_r = mean reactor temperature (C) as a function of time

θ_0 = initial mean reactor temperature nominally 232 5°C

θ = mean temperature of the steam (°C) as a function of time

τ = mean neutron lifetime = 10^{4} sec

K_i = power contribution (megawatts) from delayed neutrons of the ith kind as a function of time

λ_i = decay constant (sec ^{1}) for delayed neutrons of the ith kind

---

(1) H S d k d E C C mpb ll *El* t y *P l Th ory* W ley New Y rk 1950 (l AECD 2201)

(2) H H w t D r t d I t g t f the P l K et Eq t *Nucl cs* 5 61 67 (J ly 1949)

(3) S Gl t nd M C Edl d *Th El* t *f N cl R ct Th* y V n N t nd New Y k 1952

γ = reduction factor for power from delayed neutrons of the ith kind accounting for the fact that some delayed neutrons arise while the fuel is circulated outside the reactor and are lost to the reaction

b = reactor heat capacity = 0 175 megawatt sec/°C

a = heat exchanger conversion factor = 0 025 megawatt/°C

g = heat capacity of the heat exchanger (megawatt sec/°C)

P_0 = power demanded from the boiler (megawatts)

These equations treat only average quantities with no positional dependence They have in some respects been linearized and simplified to facilitate solution

No justification is given here for the equations themselves although it is believed that they do describe rather adequately the response of the HRE system to some perturbations Nevertheless the effects of bubble formation circulation delays and turbulent fluid flow have been totally neglected Thus it is important to emphasize that the HRE can be expected to perform in the manner indicated in this report only if the equations and the coefficient values presented above are truly those which describe the physical situation

It is also pertinent that the system of equations terminates at the steam lines No attempt has been made to include the effects of the generator or of the generator load other than in the simple term P_0 the power demanded from the heat exchanger To be completely general additional equations must be included for the complete steam system as well as for the generator and for the generator load It is conceivable that P_0 might follow time dependent gyrations that would cause the reactor to be unstable or unsafe but such is not expected to be the case The generator will tie into the TVA distribution system so load changes need not be extreme The steam turbine is not likely to be a source of disturbance since it follows the characteristic Willan s law rather closely Finally the steam lines have a 4 sec holdup tank which will act as a cushion between the nuclear and the external systems This cushion will allow only relatively slow changes in P_0 to be reflected back into the nuclear system Further equations should not therefore be required for these investigations Should greater generality and more precise analysis be desirable the variations of P_0 with time would have to be derived and additional equations would have to be incorporated in the system of simultaneous differential equations given in Eqs 1 through 4

SOLVING THE EQUATIONS

In the design of new reactor configurations or of the control system for a new reactor solutions of the kinetic equations for different values of the parameters and for various initial conditions can be of inestimable value The solutions show whether the design is satisfactory and whether the controls are adequate under various conditions of operation Unfortunately Eqs 1 through 4 do not submit readily to mathematical solution They can be solved to almost any desired degree of accuracy by utilizing methods of numerical analysis [4] It is however a very tedious task to investigate the solutions for a given set of initial conditions and for the complete range of even one parameter

Since numerous questionable conditions of operation have arisen in connection with the HRE it has been deemed advisable to design and to construct an electronic analog computer or reactor simulator to effect the desired solutions The results achieved with an analog computer though somewhat less accurate can be acquired more quickly and effortlessly than the corresponding numerical

(4) W C S ng K t C l l t o f H m g R t ORNL 1205 (Ap 1 1 1952)

solutions Furthermore the simulator has been designed to operate in real time that is any solution by the simulator shows the same excursion of power *in the same period of time* which a similar excursion by the reactor requires Thus the simulator will have additional usefulness as an aid in training reactor operators and technicians

As an example of the usefulness of the solutions suppose there comes to mind some contingency which leads say to an unusual set of initial conditions Appropriate solutions to the equations can be obtained quickly with the aid of the simulator If the simulator shows that these initial values cause only small and relatively slow excursions of power and of temperature for all values of the parameters then this contingency is no longer a cause for worry On the other hand if the simulator shows that for say a certain limited range of excess reactivity (δ) and at a certain level of power extraction (P_0) these initial conditions cause alarming excursions of power then either supplementary controls or additional operating precautions must be instituted Furthermore the ranges of δ and of P_0 for which this particular set of initial conditions significantly affects the solutions are revealed by the simulator If greater accuracy is required numerical methods may be applied in the neighborhood of these ranges instead of to the whole scope of all parameters

HRE PROBLEMS INVESTIGATED

Several types of problems are being investigated for the HRE The primary concern is whether the nuclear system is stable " that is whether it will stay within reasonable limits of neutron power for any perturbation which might arise during operation The system parameters are

1 the power demand (P_0 in Eq 4) corresponding to the power extracted from the heat exchanger by the load
2 the excess reactivity coefficient (δ in Eq 1) corresponding to a change in the position of the control rods
3 the heat capacity of the heat exchanger (g in Eq 4) corresponding to a very large or a very small boiler
4 the initial conditions

The power demand and the excess reactivity coefficient will be discussed first Because of inertia the control rods cannot be moved instantaneously Similarly because of the holdup tank in the steam lines the power demand cannot change instantaneously Nonetheless the most violent response of the nuclear system occurs when step changes either of excess reactivity or of power demand are introduced For this reason step changes of both parameters are used to show the limiting cases of extreme response to be expected Other more realistic time dependent changes in δ or in P_0 may be inserted to answer questions of a more academic interest but in studying the stability of the nuclear system in the sense in which stable" has been defined the step function holds primary interest

One specific problem considered here is the power and temperature response of the reactor to various step changes in δ for various values of P_0 and of g The physical analogy of this problem is that of equilibrium operation at a certain level of power demand and with a particular boiler configuration when an instantaneous change in control rod position takes place The changes in δ cover the entire range of values which the control rods are expected to have These changes are repeated for several boilers and for all reasonable values of power demand

The second specific problem considered here is the reactor power and temperature response to various step changes in P_0 for several values of g and for $\delta = 0$ This problem corresponds to equilibrium operation at a certain level of power demand with a

particular boiler configuration and for a fixed rod position when an instantaneous change in power demand takes place These conditions might be brought about by a sudden break in the steam lines or by the quick opening or closing of a steam valve during operation The changes in P_0 are repeated for several boilers and for all reasonable levels of power demand

The heat capacity and the initial conditions are discussed next The exact value of the heat capacity of the heat exchanger is not accurately known so three cases are studied These three cases (cf Eqs 3 and 4) are

$$g = 0 \quad g = b \quad \text{and } g = 10b$$

The consideration of the heat capacity parameter for these three cases implies the possibility that the reactor response to each condition can be represented by a family of three curves instead of a single curve An abrupt change in the boiler configuration during operation would occur only in the event that the boiler exploded This possibility is accommodated by including the value $g = 0$ Should such an explosion occur the reactor response would be simply a quick drop from the curve for $g = b$ or $g = 10b$ to the curve for $g = 0$ and $P_0 \approx 0\ 2$ megawatt No further specific questions have been raised with regard to changes in this parameter It is expected that the actual boiler characteristics will give a value in the vicinity of $g = 5b$ Preliminary studies have shown that such a value will give a reactor response no more violent than that given by the value $g = b$ and that indeed the response will be between the curves for the values $g = b$ and $g = 10b$ Thus these two values should adequately include the actual case and also provide the extremes of response for the stability study

Finally changes in the initial conditions (for various values of P_0 and of g $\delta = 0$) demonstrate several interesting perturbations Normally the initial conditions chosen are those of steady state operation at a given level of power extraction Because of temperature coefficient the equilibrium condition for the reactor power level is independent of the value of δ if sufficient time has elapsed since the insertion of a change of δ (cf Fig 15 chap 3) The last specific problem investigated is the reactor response in the event that the fuel circulating pumps falter in their operation That is at a certain level of power demand with a given boiler configuration and with fixed control rod position what happens to the reactor power and temperature if the circulating pumps stop momentarily and then resume operation? The problem is studied for two of the three boiler configurations and for all reasonable levels of power demand

These then are the three problems considered here The results obtained from the computer are presented in chapter 3

Chapter 2

THE SIMULATOR

MODIFYING THE REACTOR EQUATIONS

The equations in chapter 1 are not presented in the form most suited for obtaining an electrical analogy By substituting Eq 2 into Eq 1 however the more suitable form is obtained

$$\frac{dP}{dt} = \left[\delta - \sum_{i=1}^{5} \beta_i(1 - \gamma_i) - \alpha(\theta_r - \theta_{r_0})\right]\frac{P}{\tau} - \sum_{i=1}^{5} \gamma_i \frac{dK_i}{dt}$$

or

$$(5) \quad \frac{dP}{dt} = \frac{\delta}{\tau}P + \left[\alpha\theta_{r_0} - \sum_{i=1}^{5} \beta_i(1 - \gamma_i)\right]\frac{P}{\tau} - \sum_{i=1}^{5} \gamma_i \frac{dK_i}{dt} - \frac{\alpha\theta_r}{\tau}P$$

Thus the equations to be simulated are now Eqs 2 through 5

BASIC NETWORKS

The problem now becomes one of synthesizing an electrical system which follows the same equations as those for the reactor so that voltages at two points in the circuit represent the solutions for the unknown quantities P and θ_r Several reactor simulators have been built (cf for example refs 1 and 2) but previous models have neglected the nonlinearity that results from temperature Photographs of the HRE simulator are shown in Fig 1*a* and 1*b* but the Hathaway S8 B oscillograph used to record fast transients is not shown A block diagram of the computer simplified greatly for clarity is shown in Figs 7 and 8 (cf this chapter)

Steam Temperature Analogy Since P_0 is a driving function which may be controlled at will a start will be made by snythesizing an analogy for

$$(4) \quad g\frac{d\theta_s}{dt} = \alpha(\theta_r - \theta_s) - P_0$$

The network of Fig 2 provides the desired analogy

First assume a scale factor relating voltage to power namely that

$$(6) \quad -E_0 = -\epsilon P_0$$

Since P_0 is an arbitrary parameter of the kinetic equations a voltage can be taken from a battery or other source in such a fashion as to satisfy Eq 6 The scale factor ϵ may have any desired value in the case of this computer 10 volts represents 1 megawatt of reactor power

Next assume that

$$(7) \quad E_r = \epsilon\alpha\theta_r$$

where E_r is in volts and α and θ_r are as defined in chapter 1 The source of this voltage will be described in the following

Finally it is pointed out that the d c amplifier (Fig 2) is a high gain device whose input will not change from ground potential by any appreciable amount Since the amplifier has a gain of somewhat over 20 000 the voltage at the point marked 0 is less than 0 005 volt when E_s is 100 volts Thus I_{11} and I_{12} are in error by less than 1 part in 20 000 if it is assumed that point 0 remains at ground potential Similarly I_{13} and I_{14} will be in error by less than 1 part in 20 000 Any input current required by the d c amplifier is less than 10^5 times as large as I_{11} I_{12} I_{13} or I_{14} so this grid current of the amplifier input tube is neglected Note that the output voltage is 180 deg out of phase with the input voltage

In the light of these assumptions and of the directions and polarities shown the equation for Fig 2 is

$$I_{11} = I_{12} + I_{13} + I_{14}$$

(1) P R B 11 d H A St R Sc I tr 21 760 763 (1952) (1 AECD 2764)

(2) W P g l AP t bl El ctr c P l K t c S m l t r AECD 2941 (Ap 3 1950)

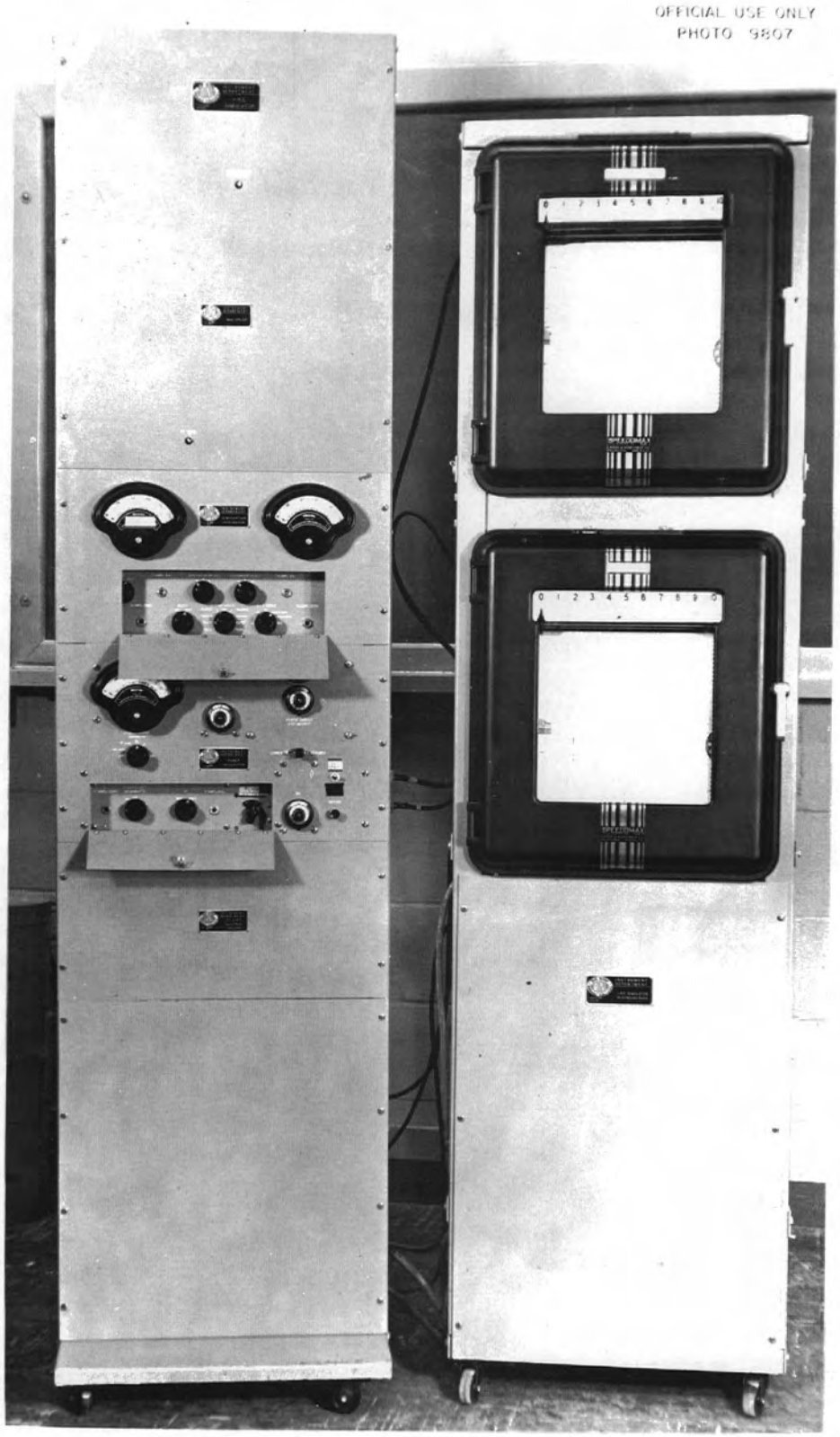

Fig. 1*a*. HRE Simulator, Front View.

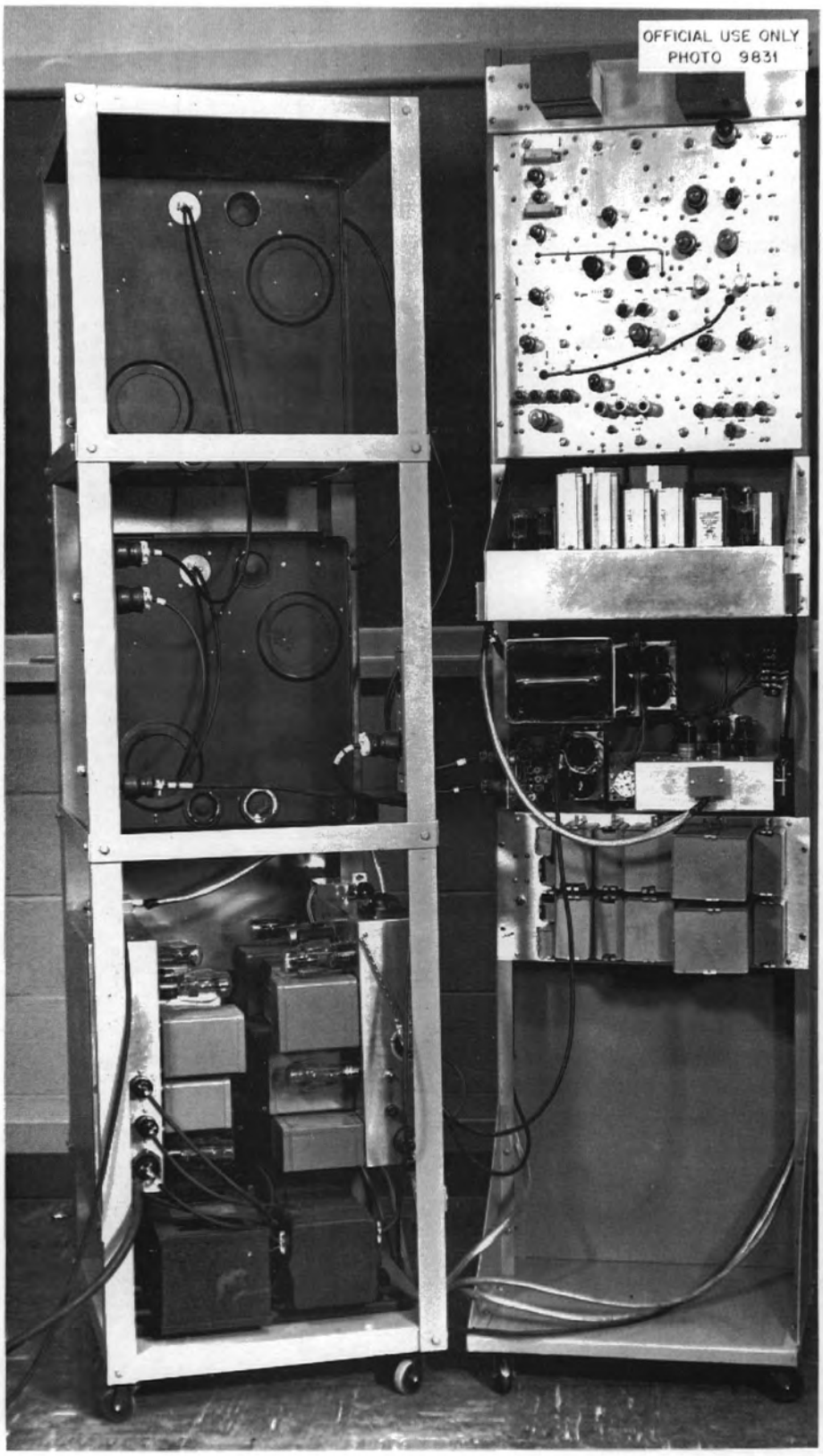

Fig. 1*b*. HRE Simulator, Rear View.

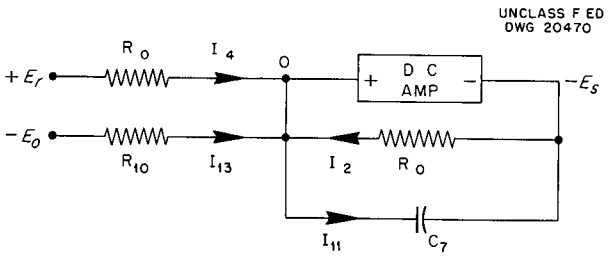

Fig 2 Steam Temperature Analogy

but

$$I_{11} = C_7 \frac{dE_s}{dt}$$

$$I_{12} = -\frac{E_s}{R_{10}}$$

$$I_{13} = -\frac{E_0}{R_{10}} = -\frac{\epsilon P_0}{R_{10}}$$

from Eq 6 and

$$I_{14} = \frac{E_r}{R_{10}} = \frac{\epsilon a \theta_r}{R_{10}}$$

from Eq 7 so

$$C_7 \frac{dE_s}{dt} = -\frac{E_s}{R_{10}} - \frac{\epsilon P_0}{R_{10}} + \frac{\epsilon a \theta_r}{R_{10}}$$

Multiplying through by R_{10}/ϵ the equation for Fig 2 becomes

$$\frac{R_{10} C_7}{\epsilon} \frac{dE_s}{dt} = a\theta_r - \frac{E_s}{\epsilon} - P_0$$

Let

(8) $$R_{10} C_7 = \frac{g}{a}$$

and the equation becomes

$$\frac{g}{\epsilon a} \frac{dE_s}{dt} = a\theta_r - \frac{E_s}{\epsilon} - P_0$$

This takes the form of Eq 4 if

(9) $$E_s = \epsilon a \theta_s$$

Reactor Temperature Analogy Similarly the electrical network of Fig 3 is the required analogy for

(3) $$b \frac{d\theta_r}{dt} = P - a(\theta_r - \theta_s)$$

Just as in the steam temperature

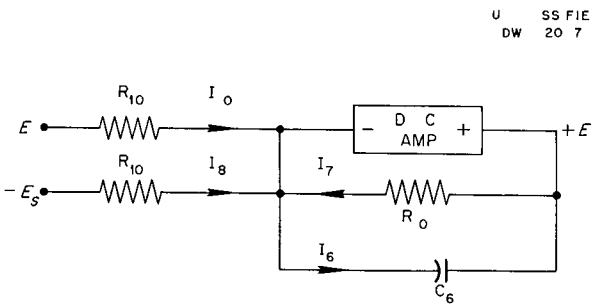

Fig 3 Reactor-Temperature Analogy

analogy

$$I_6 = I_7 + I_8 + I_{10}$$

or with the polarities shown in Fig 3

$$-C_6 \frac{dE_r}{dt} = \frac{E_r}{R_{10}} - \frac{E_s}{R_{10}} - \frac{E}{R_{10}}$$

Upon substituting Eqs 7 and 9 in the above equation it is seen that

$$-\epsilon a C_6 \frac{d\theta_r}{dt} = \frac{\epsilon a \theta_r}{R_{10}} - \frac{\epsilon a \theta_s}{R_{10}} - \frac{E}{R_{10}}$$

Multiplying through by $-R_{10}/\epsilon$ and letting

(10) $$R_{10} C_6 = \frac{b}{a}$$

then gives

$$b \frac{d\theta_r}{dt} = \frac{E}{\epsilon} - a(\theta_r - \theta_s)$$

which immediately takes the form of Eq 3 if

(11) $$E = \epsilon P$$

Equation 11 is of course one of the equalities desired and it will result when Eq 5 is considered

Delayed Neutron Analogy The network of Fig 4 gives the electrical analogy for

(2) $$\frac{dK_i}{dt} = -\lambda_i K_i + \frac{\beta_i}{\tau} P$$

$$i = 1 \quad 2 \quad 3 \quad 4 \quad 5$$

In terms of the direction and polarities of Fig 4

(12) $$I_i = -C_i \frac{dE_c}{dt} = -\frac{E - E_c}{R}$$

or

$$\frac{dE_c}{dt} = \frac{E - E_c}{R_i C_i}$$

Now let

$$R_i C_i = \frac{1}{\lambda_i} \tag{13}$$

and also let

$$E_c = n_i K_i$$

where n_i is a proportionality constant Then

$$n_i \frac{dK_i}{dt} = -n_i \lambda_i K_i + \lambda_i E$$

Upon dividing through by n_i and substituting Eq 11 in the above equation it is seen that

$$\frac{dK_i}{dt} = -\lambda_i K_i + \frac{\lambda_i \epsilon}{n_i} P$$

which assumes the form of Eq 2 if

$$n_i = \frac{\epsilon \lambda_i \tau}{\beta_i} \tag{14}$$

Reactor Power Analogy The final equation to be simulated is

$$\frac{dP}{dt} = \frac{\delta}{\tau} P + \left[\alpha\theta_{r_0} - \sum_{i=1}^{5} \beta_i (1 - \gamma_i) \right] \frac{P}{\tau} - \sum_{i=1}^{5} \gamma_i \frac{dK_i}{dt} - \frac{\alpha\theta_r}{\tau} P \tag{5}$$

UNCLASSIFIED
DWG 20472

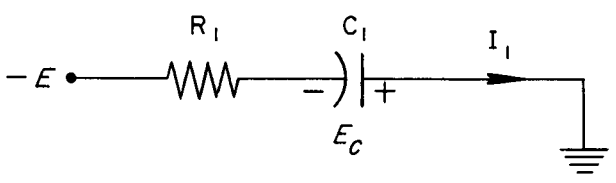

Fig 4 Delayed Neutron Analogy

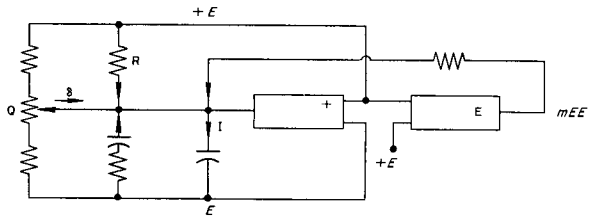

Fig 5 Reactor Power Analogy

and the network of Fig 5 is the desired analogy

As in the steam temperature and reactor temperature analogies the d c amplifier is a high gain high input impedance device so with negligible error its input may be considered to stay at ground potential and to require no current Therefore the conductor marked ADD (Fig 5) may be considered to be ground for the network The equation for Fig 5 is

$$I_9 = I_\delta + I_0 + \sum_{i=1}^{5} I_i + I_m \tag{15}$$

but

$$I_9 = C_9 \frac{dE}{dt} \tag{16}$$

and

$$I_0 = \frac{E}{R_0} \tag{17}$$

while from Eqs 12 and 14

$$\sum_{i=1}^{5} I_i = -\sum_{i=1}^{5} C_i \frac{dE_c}{dt} = -\sum_{i=1}^{5} C_i \frac{\epsilon \lambda_i \tau}{\beta_i} \frac{dK_i}{dt} \tag{18}$$

Furthermore the multiplier has been designed to take the input voltages E and E_r and to give an output voltage

$-mEE_r$ Hence

$$(19) \qquad I_m = -\frac{mEE_r}{R_m}$$

Now by putting Eqs 16 17 18 and 19 into Eq 15 it is seen that

$$(20) \quad C_9 \frac{dE}{dt} = I_\delta + \frac{E}{R_0} - \sum_{i=1}^{5} C_i \frac{\epsilon\lambda_i\tau}{\beta_i}\frac{dK_i}{dt} - \frac{mEE_r}{R_m}$$

In order to obtain the correct term for I_δ consider Fig 6 The magnitude of I_δ is dependent upon the setting of the potentiometer tap on Q as well as upon the magnitude of the voltage E and of the resistances R and Q If D is defined as the linear position of the tap on Q (that is $D = 0$ at center of Q $D = +1$ at the $+E$ end and $D = -1$ at the $-E$ end) then

$$I_\delta = \frac{E}{R + \frac{Q}{2}(1 - D)} + \frac{-E}{R + \frac{Q}{2}(1 + D)}$$

or

$$(21) \quad I_\delta = \frac{ED}{R\left[1 + \frac{R}{Q} + \frac{Q}{4R}(1 - D^2)\right]}$$

When the tap is at either extreme of the potentiometer I_δ is maximum for a given E Thus for maximum positive current $D = 1$ and

$$(22) \qquad (I_\delta)_{max} = \frac{E}{R\left(1 + \frac{R}{Q}\right)}$$

UNCLASSIFIED
DWG 20474

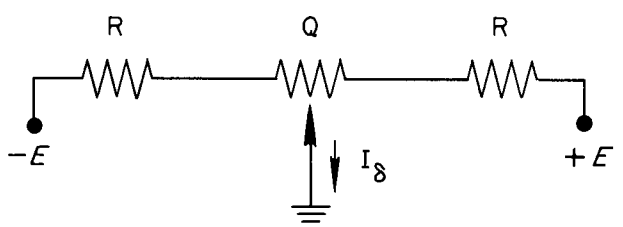

Fig 6 Excess Reactivity Network

Now let

$$(23) \qquad \frac{\delta}{\delta_m} = \frac{I_\delta}{(I_\delta)_m}$$

Utilizing Eq 22 then gives

$$(24) \qquad I_\delta = \frac{\delta}{\delta_m}\,\frac{E}{R\left(1 + \frac{R}{Q}\right)}$$

Before returning to Eq 20 it is desirable to note that substituting Eqs 21 and 22 into Eq 23 gives

$$\frac{\delta}{\delta_m} = \frac{ED}{R\left[1 + \frac{R}{Q} + \frac{Q}{4R}(1 - D^2)\right]}\,\frac{R\left(1 + \frac{R}{Q}\right)}{E}$$

$$= \frac{D\left(1 + \frac{R}{Q}\right)}{1 + \frac{R}{Q} + \frac{Q}{4R}(1 - D^2)}$$

so

$$(25) \quad \delta = \frac{D}{1 + \frac{\left(\frac{Q}{R}\right)^2(1 - D^2)}{4\left(1 + \frac{Q}{R}\right)}}\,\delta_m$$

Because of loading effects upon the potentiometer Eq 25 expresses δ as a nonlinear function of D Increasing the ratio R/Q causes the denominator of Eq 25 to approach 1 When $R/Q \geqq 5$

$$(26) \qquad \delta = D\delta_m$$

is always within 1% of being correct while the equality is exact for any R/Q when $D = 0 \pm 1$ Equation 26 permits the desirable feature that the potentiometer have a linear calibration

Now by substituting Eq 24 into Eq 20 it is seen that

$$C_9 \frac{dE}{dt} = \frac{\delta}{\delta_{max}}\,\frac{E}{R\left(1 + \frac{R}{Q}\right)} + \frac{E}{R_0} - \sum_{i=1}^{5} C_i \frac{\epsilon\lambda_i\tau}{\beta_i}\frac{dK_i}{dt} - \frac{mEE_r}{R_m}$$

Then substituting Eqs 11 and 7 in the above equation and dividing through by ϵ gives

$$C_9 \frac{dP}{dt} = \frac{\delta}{\delta_{max}} \frac{P}{R\left(1 + \frac{R}{Q}\right)} + \frac{P}{R_0} - \sum_{i=1}^{5} C_i \frac{\lambda_i \tau}{\beta_i} \frac{dK_i}{dt} - \frac{am\epsilon}{R_m} P\theta_r$$

or by putting in the proper coefficients

$$[C_9] \frac{dP}{dt} = \left[\frac{\tau}{R\left(1 + \frac{R}{Q}\right) \delta_{max}}\right] \frac{\delta}{\tau} P - \sum_{i=1}^{5} \left[\frac{C_i \lambda_i \tau}{\beta_i \gamma_i}\right] \gamma_i \frac{dK_i}{dt} - \left[\frac{am\epsilon\tau}{\alpha R_m}\right] \frac{\alpha\theta_r}{\tau} P + \left[\frac{\frac{\tau}{R_0}}{\alpha\theta_{r_0} - \sum_{i=1}^{5} \beta_i (1 - \gamma_i)}\right] \left\{\alpha\theta_{r_0} - \sum_{i=1}^{5} \beta_i (1 - \gamma_i)\right\} \frac{P}{\tau}$$

Clearly this equation assumes the form of Eq 5 if all the terms within the brackets are equated

$$(27) \quad C_9 = \frac{\tau}{R\left(1 + \frac{R}{Q}\right) \delta_{max}} = \frac{C_i \lambda_i \tau}{\beta_i \gamma_i} = \frac{am\epsilon\tau}{\alpha R_m} = \frac{\frac{\tau}{R_0}}{\alpha\theta_{r_0} - \sum_{i=1}^{5} \beta_i (1 - \gamma_i)}$$

If this is done Eq 11 becomes a true equality

Summary of Coefficient Values To summarize the results achieved consider Fig 7 the simplified block diagram of the complete computer If it is assumed that

(6) $$-E_0 = -\epsilon P_0$$

then

(9) $$E_s = \epsilon a \theta_s$$

if

(8) $$R_{10} C_7 = \frac{g}{a}$$

Also

(7) $$E_r = \epsilon a \theta_r$$

if

(10) $$R_{10} C_6 = \frac{b}{a}$$

and Eqs 3 and 4 are fulfilled Furthermore

$$E_c = n_i K_i$$

if

(14) $$n_i = \frac{\epsilon \lambda_i \tau}{\beta_i}$$

and

(13) $$R_i C_i = \frac{1}{\lambda_i}$$

and Eq 2 is satisfied Finally

$$E = \epsilon P$$

if Eqs 27 are fulfilled and

(26) $$\delta = D\delta_m \qquad \text{if } \frac{R}{Q} \geq 5$$

This therefore summarizes the list of conditions placed upon the circuit elements so that they will give voltages which satisfy the reactor kinetic equations for the desired coefficients

Since there are several more circuit elements than there are conditions placed upon the values of these elements some latitute of choice

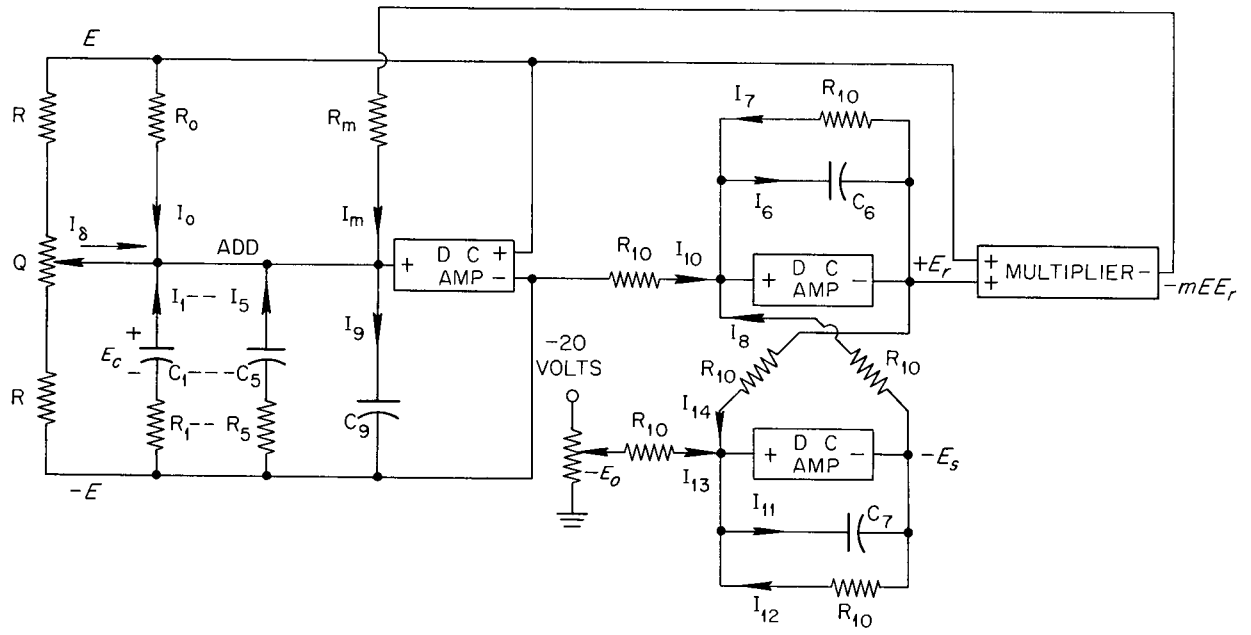

Fig 7 Electrical Analog of Reactor Kinetic Equations

remains for the designer It may be noted that in some instances the choice of one circuit value determines a series of other values For instance after choosing C_9 the values of the delayed neutron group circuit elements are automatically fixed since

$$\lambda_i = \frac{1}{R_i C_i} \tag{13}$$

and

$$C_9 = \frac{C_i \lambda_i \tau}{\beta_i \gamma_i} = \frac{\tau}{R_i \beta_i \gamma_i} \tag{27}$$

After the choice of a value for C_9 all the values in the two equations except the R_i and the C_i are known quantities Hence only one solution for each of the R_i and the C_i will satisfy both conditions Incidentally the sixth delayed neutron group was omitted (with negligible error) be cause it contributes such a small amplitude of current

The values used in the computer for the circuit elements and for the coefficients of the kinetic equations are those given in chapter 1 and in the following

1 Power to voltage scale factor
ϵ = 10 volts/megawatt

2 Integrating condenser
C_9 = 0 02 μfd

3 Excess reactivity
δ_{max} = 0 01667
R = 50 000 ohms
Q = 10 000 ohms

4 Biasing resistor

$$\alpha\theta_{r_0} - \sum_{i=1}^{5} \beta_i (1 - \gamma_i) = 0\ 1883 - 0\ 009$$

so R_0 = 26 750 ohms [In the choice of the biasing resistor it is of no consequence to the solution of the computer problems whether the point of zero temperature is 0°K 0°F 0°C or 170°C as long as θ_r = (θ_r − zero point) does not become negative and thus cause a change of polarity in E_r which now is equal to $\epsilon\alpha\theta_r$ The multiplier cannot accommodate such a change of polarity In order to reduce the

current load upon the amplifier the zero of temperature is taken at 170°C and the true value of R_0 is 100 000 ohms corresponding to θ_{r_0} of 62 5°C Preliminary mathematical considerations (cf app) show that for the chosen value of δ_m 62 5 - 18 8 $\leq \theta_r \leq$ 62 5 + 18 8 Thus $\theta_r = \theta_r -$ 170°C is always positive]

5 Delayed neutron groups [3]

i	γ_i	β_i	λ_i (sec ^{1})	R_iC_i (sec)	C_i (μfd)	R_i (megohms)
1	1 00	0 00030	14 00	0 0714	0 00432	16 5
2	1 00	0 00087	1 61	0 622	0 1086	5 73
3	0 904	0 00250	0 456	2 190	0 988	2 22
4	0 819	0 00218	0 154	6 49	2 32	2 80
5	0 810	0 00177	0 0315	31 80	9 08	3 50

6 Steam temperature network

$$\frac{g}{a} = 0\ 7\ 70 \text{ sec}$$

$$C_7 = 0\ 2\ 33\ 23\ 33\ \mu\text{fd}$$

$$R_{10} = 3\ 0 \text{ megohms}$$

7 Reactor temperature network

$$\frac{b}{a} = 7 \text{ sec}$$

$$C_6 = 2\ 33\ \mu\text{fd}$$

$$R_{10} = 3\ 0 \text{ megohms}$$

8 Multiplier network

$$m = 0\ 016/\text{volt}$$

$$R_m = 25\ 000 \text{ ohms}$$

9 For the desired solutions a voltmeter or recording oscillograph is used to measure

$$P = \frac{E}{\epsilon} = 0\ 1E \text{ (megawatts)}$$

$$\theta_r = \frac{E_r}{\epsilon a} + 170 = 4E_r + 170 \text{ (°C)}$$

$$\theta_s = \frac{E_s}{\epsilon a} + 170 = 4E_s + 170 \text{ (°C)}$$

[3] J M Ste p te mmu cat d t d F b 15 1950

THE D C AMPLIFIER

Without drift compensation an analog computer using d c amplifiers is virtually useless Since similar stages operating under similar con ditions tend to drift in similar fashions the difference between the output voltages of two such similar stages tends to have very little drift For this reason difference amplifiers are used in the reactor simulator The drift encountered in this design is less than ±1 mv over a 12-hr period of operation

An added advantage of using dif ference amplifiers is that both positive and negative signals are available at every point in the circuit Thus addition or subtraction is greatly facilitated with no change in the basic design Since a difference system is used the true block diagram is that shown in Fig 8 Note that this is the same as the block diagram given in Fig 7 except that now the computer solves for both $+P$ and $-P$ The amplifier outputs both positive and negative are loaded in a balanced manner so that no dissimilarity due to loading is inserted

The unit tested most extensively for drift did not contain a very carefully matched input tube (6SN7) Since the input tube in this amplifier is the only important component in determining the differential drift it was aged and then carefully matched for use in the completed computer Either the 6SN7 or the 12AU7 both low mu tubes which have proved to have low differential drift characteristics

UNCLASSIFIED
DWG 20476

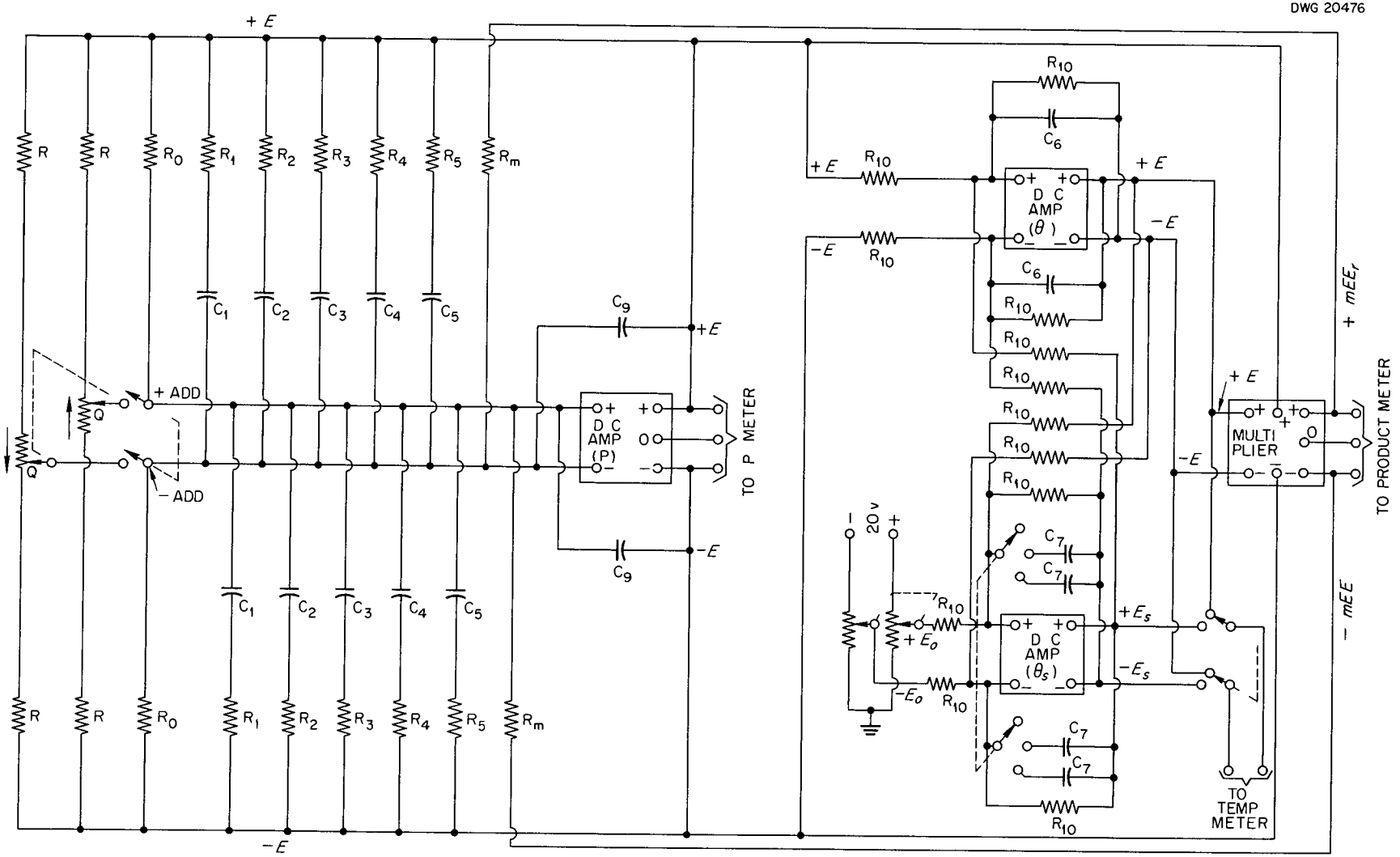

Fig 8 Block Diagram of HRE Simulator

is a good input tube In order to keep the drift low by reducing the grid current and the noise voltages the input tube (6SN7) is operated at reduced heater voltage (5 8 volts) at reduced plate voltage (23 volts $\approx \mu$) and at low space current (60 μa) The differential gain of the amplifier is over 20 000 The common mode gain is less than 1 in order to provide longitudinal stability The usable output range is ±0 1 volt to ±100 volts with 10 ma maximum load current Since the amplifier has unity feedback in its present application the deviation from linearity is less than 1 part in 20 000 The schematic diagram for this amplifier is shown in Fig 9

THE MULTIPLIER

In order to solve the equations in real time a fast and accurate multiplier had to be developed The method of multiplication is based essentially upon pulse techniques Fundamentally the method consists of

1 producing a rectangular pulse whose time duration is proportional to one variable in this case E_r
2 using this pulse to switch an integrator which integrates with respect to time at a rate proportional to the other variable E
3 reading the peak voltage attained

Since the integrator integrates at a rate proportional to E and for a time proportional to E_r the final peak voltage is proportional to the product of E and E_r

The method is straightforward enough but the reduction of it to practice in the form of an accurate multiplier is somewhat less straightforward Figure 10 is a block diagram showing the essential parts of the electronic system

In Fig 10 the blocks along the heavy arrows from the pulse repetition generator through the proportional gate generator constitute a pulse width modulation system which produces pulses of duration proportional to E_r The pulse repetition generator is simply a frequency stabilized blocking oscillator which sets the basic sampling rate of 10 kc Since the product term in Eq 5 has a maximum rate of change of only about 20 cps this high sampling rate introduces negligible error The pulse shaper is a one shot multivibrator which when triggered by the pulse repetition generator produces a rectangular pulse of about 82 μsec duration Since one tube of this multivibrator is fully on for 82 out of 100 μsec and since this duty cycle cannot be increased appreciable while still maintaining reliable performance the pulse shaper begins to place an upper limit upon E_r Next is the linear integrator which is switched on and off by the 82 μsec pulses from the pulse shaper The linear integrator is a sweep circuit and its output voltage rises at the constant rate of 1 volt/μsec and establishes the proportionality between the voltage E_r and time The integration rate does not reach this constant value until after the sweep circuit has been on for 1 or 2 μsec In order that the sweep be quite linear this stage is biased in such a way that the output voltage starts at about −3 volts and sweeps positive When the voltage comparator is considered it will be seen that this biasing arrangement permits discarding the first few microseconds of integration the period wherein the nonlinearity occurs

Thus far a saw tooth wave has been generated which goes from −3 volts to +78 volts in about 82 μsec This saw tooth wave is generated at a stable rate of 10 000 cps and it has a very constant slope in the range from 0 to 78 volts The saw tooth wave is fed into the voltage comparator When the sweep voltage reaches ground potential a steep pulse called the start pip is generated by a blocking oscillator The sweep voltage which is integrating at a very linear rate continues to rise When this voltage is equal to E_r another steep pulse of 3 μsec duration called the stop pip is generated These two pulses are

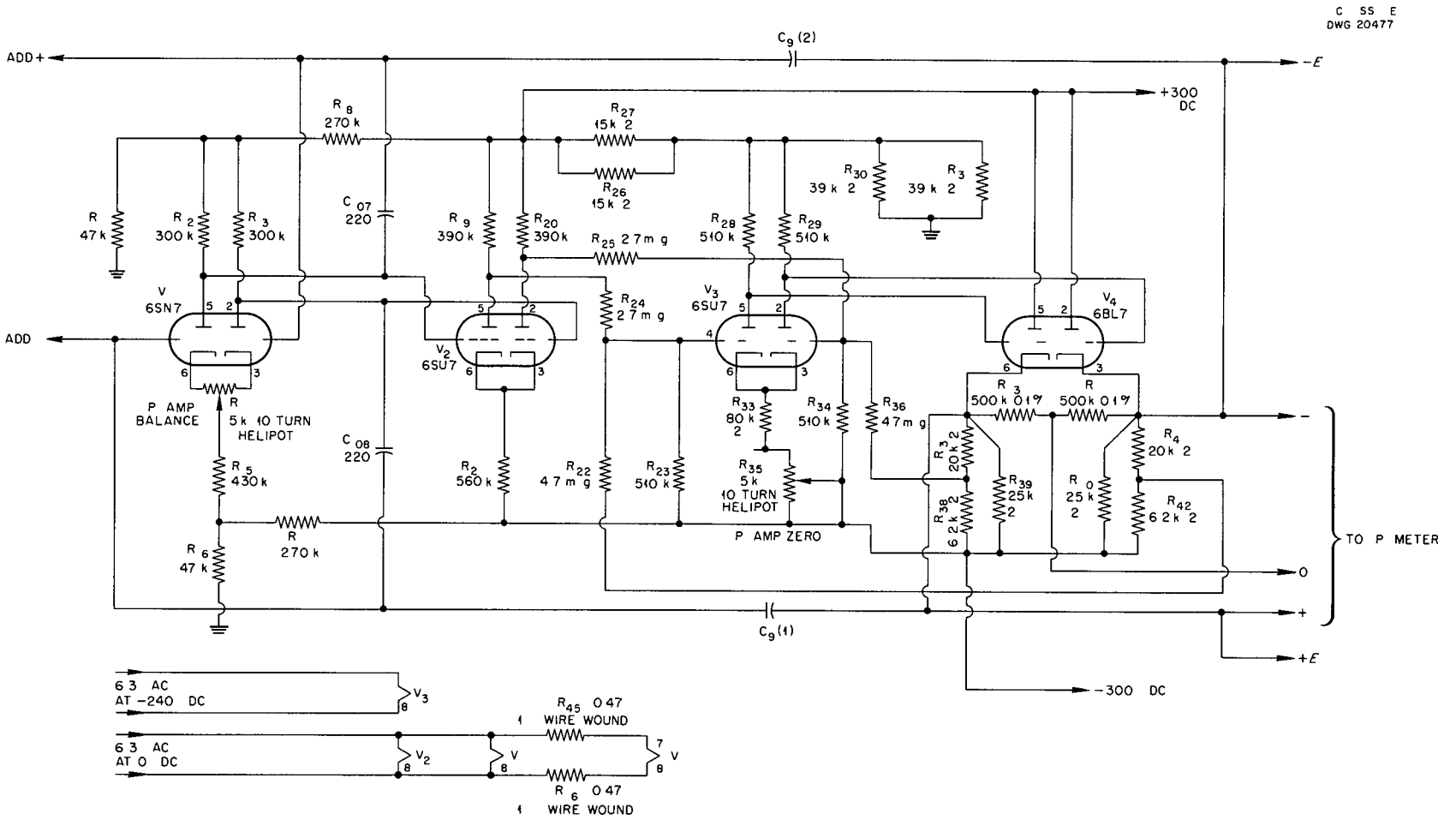

Fig 9 D C Amplifier Circuit

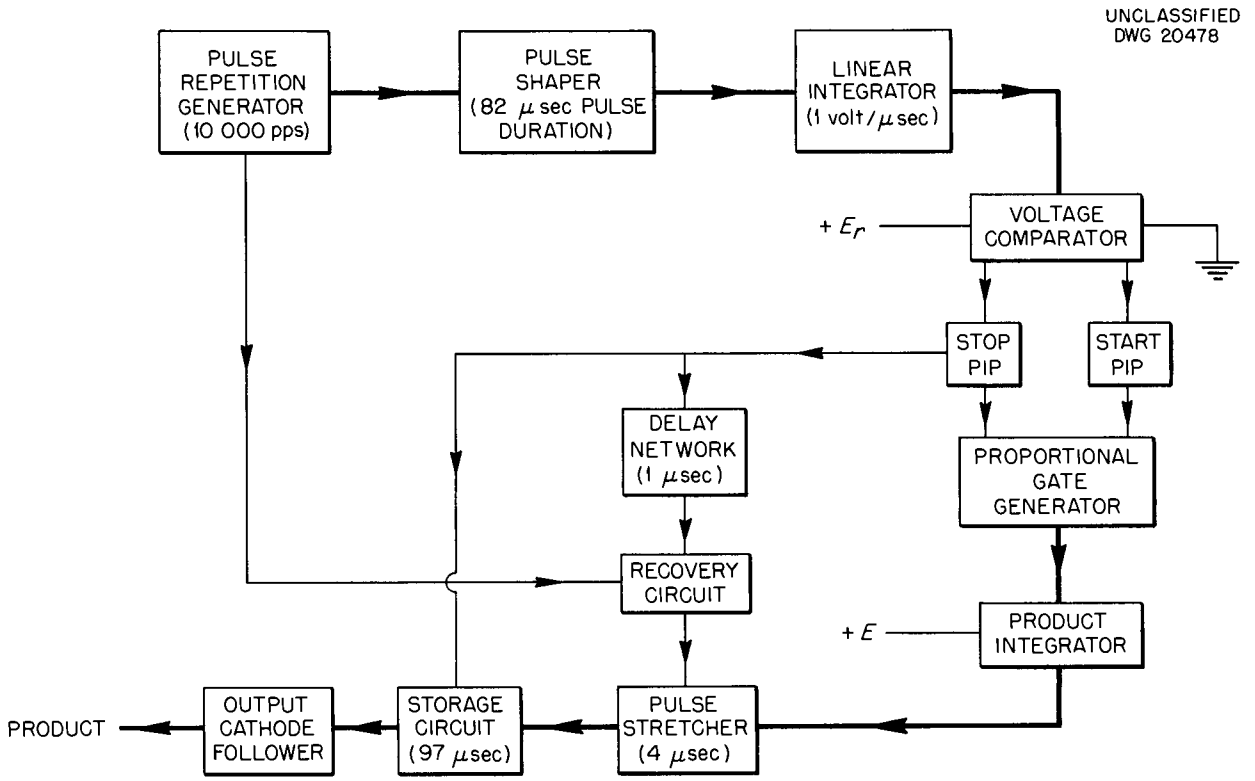

Fig 10 Block Diagram of Multiplier

clamped through diodes to the proportional gate generator which is fundamentally just a condenser which sets the grid voltage of a cathode follower The start pip causes the voltage across the condenser to rise quickly to a large positive value The front edge of the stop pip causes the condenser to discharge quickly to a slightly negative voltage Thus the output cathode follower of the proportional gate generator produces a positive pulse whose time duration is proportional to E_r in the ratio of 1 μsec/volt The duration of the start pip and the rise time of the stop pip set a lower limit of about 5 volts upon E_r while the pulse shaper the integration rate of the linear integrator and the resolution of the voltage comparator combine to establish an upper limit on E_r of about 75 volts for accurate operation

The second step of the multiplication process is much simpler The pulse from the proportional gate generator is clamped through diodes to the grid of the product integrator and allows it to integrate only for the period of time between the start pip and the beginning of the stop pip The second variable E is applied as the voltage which sets the rate of integration Thus the product integrator integrates at a rate proportional to E for a time proportional to E_r The precision of the product integrator is determined by its loop gain In this computer the product integrator is accurate to within 1% but this accuracy can be made as great as necessary by simply increasing the gain

The final step of the multiplication process is accomplished through the use of a gated-clamp circuit called a pulse stretcher and a condenser and electronic switch combination called the storage circuit The output voltage of the product integrator is connected through clamping diodes to a condenser The diode polarity is such that the condenser voltage follows the output

voltage of the product integrator as this latter voltage goes up to its final peak value but when the product integrator output voltage drops back down to its rest value the diode clamp circuit isolates the condenser and causes the condenser voltage to stay at the final peak value reached by the product integrator In this way the peak output voltage attained by the product integrator is held momentarily by the pulse stretcher Next the 3 μsec pulse initiated by the stop pip blocking oscillator plays a twofold part First this pulse is applied to an electronic switch The switch then allows a small condenser (which together with the electronic switch makes up the storage circuit) to be charged up to the value of voltage held by the pulse stretcher condenser at the end of 3 μsec the storage circuit condenser is again isolated from the pulse stretcher by the electronic switch The second part played by this 3 μsec pulse consists of causing the pulse stretcher to recover The pulse goes through a 1 μsec delay line and the back edge of the pulse causes a flip flop in the recovery circuit to change its state of operation to produce a negative signal This signal in turn is clamped to the pulse-stretcher condenser and causes it to become uncharged Meanwhile the storage circuit isolated by the electronic switch from the changes in voltage taking place behind it causes the output cathode follower to maintain a steady voltage proportional to the peak voltage attained by the product integrator during its last preceding integration Finally the next pulse from the pulse repetition generator restores the flip flop in the recovery circuit to its normal state so that the pulse stretcher is again ready to follow the product integrator and at the same time the chain of events leading to a new product is initiated Figure 11 shows the electronic circuitry with the functional blocks corresponding to those in Fig 10 superimposed on the schematic diagram In the above explanation and in Fig 10 the multiplier has been described as if it produced pulses of only one polarity throughout From Fig 11 it is apparent that a differential system is again used and that both positive and negative signals are produced in each circuit following the pulse shaper

Much attention has been given to details in order to improve the performance of the multiplier As in the case of the amplifiers a differential system is used throughout to avoid drift The voltage comparator provides pulses whose separation is nicely drift free since similar comparison circuits are used to initiate both the start pip and the stop pip In every case where thermionic diodes can be used an effort has been made to utilize them because of their high back resistance In some instances the thermionic current with zero applied plate voltage can be neither tolerated nor conveniently balanced out with a compensating diode In such cases crystal diodes carefully selected and conservatively operated are used

The performance of the circuit is gratifyingly reliable fast and sufficiently accurate for this application The variable E can cover a range from 1 to 100 volts while E_r has a usable range of 5 to 75 volts Both variables can change at any rate up to 100 cps without adding more than 2% to the inaccuracy of the product Tests show that the product value has an inaccuracy of no more than 5% over an output range of 0 06 to 20 volts The largest contributors to this inaccuracy are the nonlinearity of the product integrator and the nonlinearity of the output cathode follower Both elements can readily be improved by substituting feedback amplifiers with suitably high gain With E or E_r or both E and E_r reduced to zero the output voltage does not exceed ±2 mv This noise figure might be improved if it were necessary but since the desired range of product voltage is many times this value the computer accuracy suffers to only a negligible extent from the presence of this noise

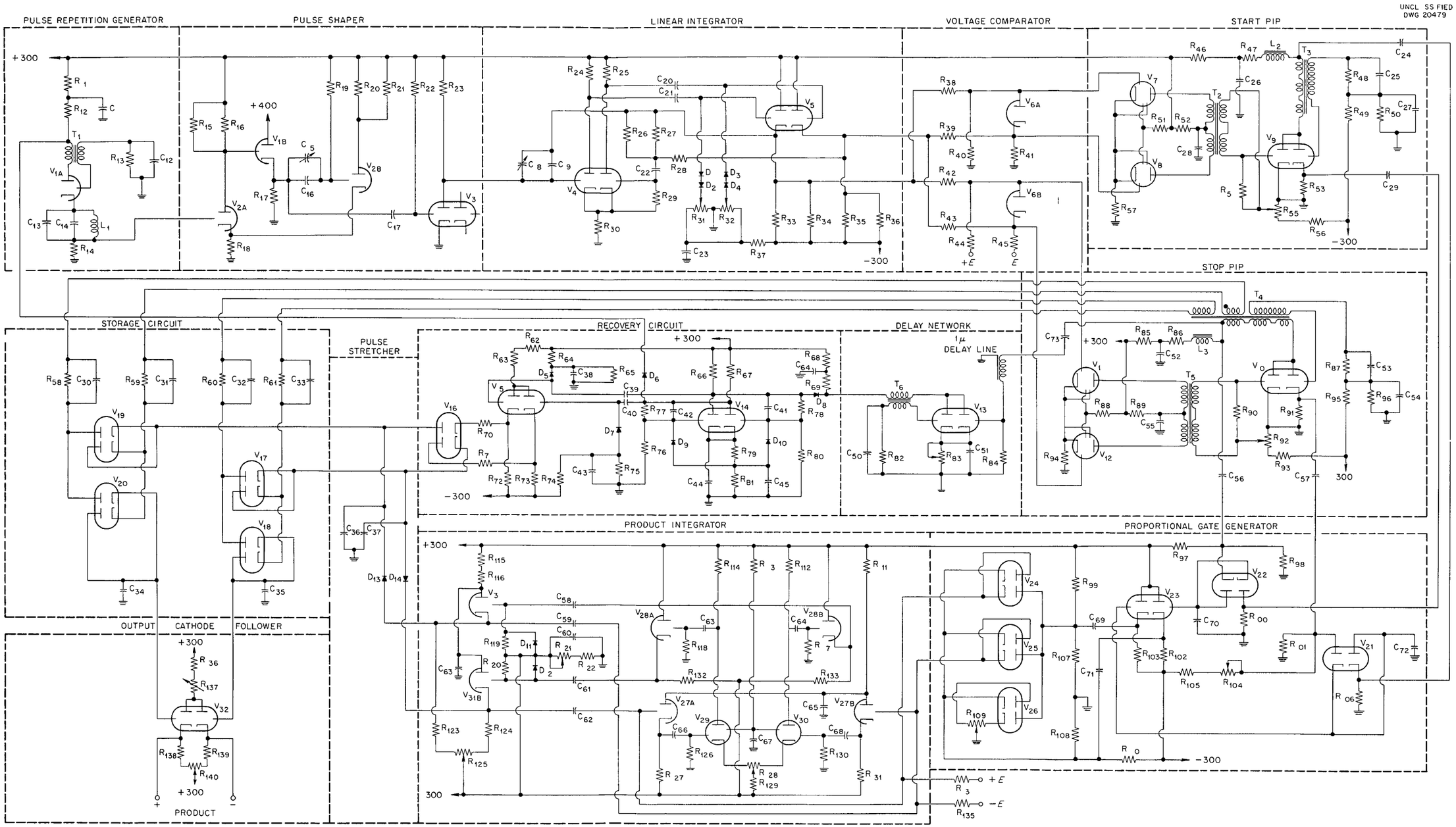

Fig 11 Multiplier Circuit

Chapter 3
COMPUTER RESULTS

CALIBRATION

Before the information from the computer could be accurately correlated the instrument had to be calibrated Two calibrations were made to check the correspondence of the physical circuitry with the theoretical values

The experimental calibration of the excess reactivity coefficient is shown in Fig 12 The calibration was made in the following manner When steady state operation is reached for a measured value of initial power level P_1 a small negative change in excess reactivity is introduced Then the maximum change in power $p_{m\,x}$ is measured and the change in δ is calculated from

$$\Delta = \frac{p_{m\,x} \sum_{i=1}^{5} \gamma_i \beta_i}{P_1 + p_m} \tag{28}$$

where

Δ = change in excess reactivity coefficient δ

$\sum_{i=1}^{5} \gamma_i \beta_i$ = 0 00665

P_1 = initial power level

$p_{m\,x}$ = maximum change in power level a negative quantity

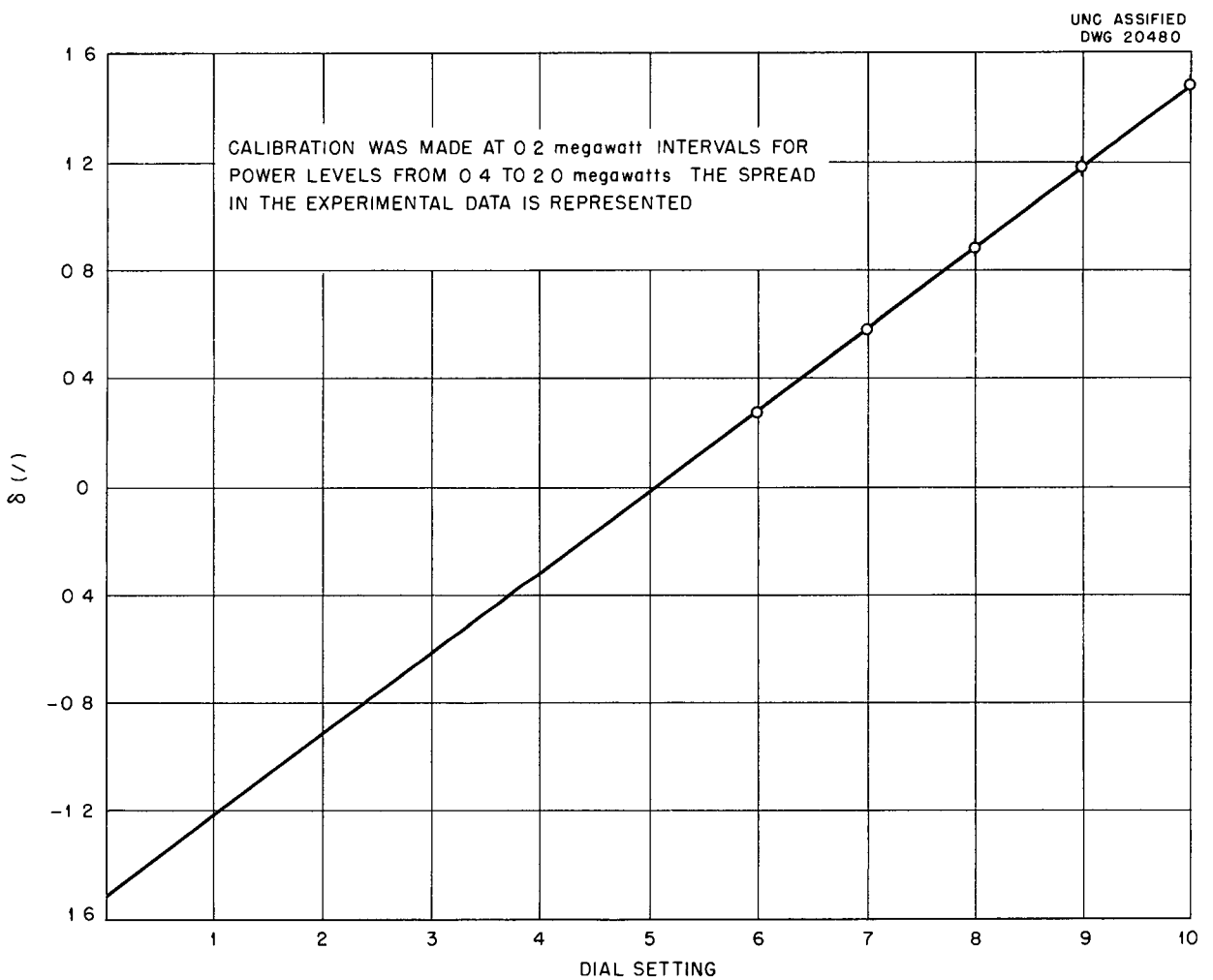

Fig 12 Calibration of Excess Reactivity Excess reactivity coefficient as a function of potentiometer dial setting

(Eq 28 is derived in the appendix) Figure 13 shows a typical curve given by the instrument for one such point in this calibration

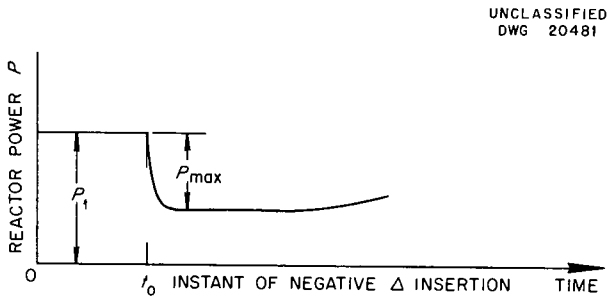

Fig 13 $P = f(t)$ for a Small Negative Step in δ

The method of calibration outlined above is readily applied to the whole range of the δ potentiometers Q (cf Fig 7 or 8) since only the change in δ is calculated The potentiometer dial may be set for some chosen dial reading of greater than 5 (the nominal point of $\delta = 0$) and the power level is then allowed to reach a steady state value with the potentiometer taps connected to the ADD circuits As will be seen in one of the problems investigated later the power level does reach an equilibrium value P_1 under these conditions and indeed P_1 is equal to P_0 the power demand at the boiler plus any power losses in the nuclear system At any rate after an equilibrium power level is reached a negative step in Δ may be introduced by opening the switch and thus disconnecting the potentiometer taps from the ADD circuits and interrupting a positive value of the current I_δ In this fashion a calibration is obtained for the region of positive δ (that is for dial settings from 5 to 10) For calibration in the region of negative δ (namely dial settings of 0 to 5) the power level is allowed to reach equilibrium while the switch is open and the potentiometer taps are not connected to the ADD circuits The potentiometer dial is set at some selected reading of less than 5 Then the switch is closed to connect the potentiometer taps to the ADD circuits and to allow a negative value of I_δ to flow Since the condition of operation with the switch open corresponds to $\delta = 0$ (cf Eq 23) both the above described methods of introducing negative values of Δ are referred in a straightforward manner to the zero of δ Therefore for any particular measurement $|\delta| = -\Delta$ and the sign of δ is determined by whether the potentiometers were disconnected from or connected to the ADD circuits to affect the negative change in Δ

Further consideration of Eq 28 and of Fig 12 is now necessary The derivation of Eq 28 is based upon the assumption that the delayed neutron concentrations and the reactor temperature do not change appreciably in the time required for the power level to go from P_1 to $(p_{m\ x} + P_1)$ This assumption is very accurate for negative values of Δ Since the entire computer is involved in the calibration shown in Fig 12 the deviation of the calibration curve from the theoretical value of $\delta = 1\ 66\%$ at a dial setting of 10 and $\delta = -1\ 66\%$ at 0 is due to the accumulated errors of the entire instrument The resistance values of the excess reactivity potentiometers Q (cf Eqs 26 and 27 or Fig 8) are not exactly the nominal values the measured ohmic resistance is approximately 3% below the 10 000 ohm value chosen a fact which changes the theoretical value of δ_m to $\pm 1\ 62\%$ but which does not violate the inequality upon which the validity of Eq 26 rests Slight imperfections in the potentiometers account for the facts that $\delta = 0$ does not lie exactly at a dial reading of 5 and that the positive δ_{max} is somewhat smaller in magnitude than the negative value The remaining discrepancy between the observed value $|\delta_{max}| = 1\ 50 \pm 0\ 01\%$ and the corrected theoretical value of 1 62% is largely due to the fact that the multiplier output is not quite linear with changes in P There is a slight decrease in the effective value

of α as P increases This decrease in α then manifests itself as an apparent decrease in the value of δ as $|\delta|$ is increased The effects of this nonlinearity are also discussed briefly in the appendix In any event this calibration takes into account many of the inaccuracies of the instrument and in large part corrects for these imperfections Note that the calibration shown in Fig 12 is quite linear a fact which is partly due to the use of potentiometers having only 0 1% deviation from linearity and which confirms the conclusions incorporated in Eq 26

The second calibration is that of the temperature coefficient of reactivity The experimental curve is shown in Fig 14 The reactor temperature is measured when it has reached an equilibrium value with $\delta = 0$ then a known change in δ is inserted and the temperature is again measured after its steady state value is attained Then

$$\alpha = \frac{\text{change in excess reactivity}}{\text{change in reactor temperature}} = \frac{\delta}{\Delta\theta_r}$$

as is also derived in the appendix Thus the temperature coefficient of reactivity is the tangent of the angle designated as ϕ in Fig 14 The slight nonlinearity of the multiplier is hardly apparent here since it is largely accommodated in the calibration of the excess reactivity coefficient

According to the calculations of instrument accuracy any results should be easily within 10% of the true solutions to the stated equations The computer itself gives solutions which are within 3% of being accurate most of the error being attributable to multiplier inaccuracy The accumulated errors of the recording oscillograph and its associated amplifier are estimated to be about 3% of the reading Finally the errors involved in reading the recorder charts in calibrating the recorder etc average about 2% of the reading Thus the following results should be within 10% of the true solution to the kinetic equations Eqs 2 through 5 for the coefficient values stated previously

SOLUTIONS FOR SEVERAL HRE PROBLEMS

Dynamic Response to a Positive Step Change in Excess Reactivity Coefficient The first problem investigated is the dynamic response of the reactor power of the reactor temperature and of the boiler temperature to a step change in excess reactivity coefficient for several values of boiler heat capacity and for all feasible values of power demand at the boiler A set of typical curves is shown in Fig 15 This specific set of curves shows for a constant load of $P_0 = 0\ 4$ megawatt the reactor and steam temperature changes and the reactor power as functions of time following a +0 88% step change in δ inserted at time $t = 0$ A logarithmic time scale is employed so that both fast and slow changes can be observed

The power curve of Fig 15 will be considered first Here several interesting features become evident – note that the height of the power peak is not influenced by the boiler heat capacity Indeed the power transient is almost identical for all three cases However the tail of the power curve is slightly different for the different heat capacity values that is the power falls off somewhat more slowly for larger values of boiler heat capacity It should also be pointed out that the final power level is identical to the initial power level This indicates that the reactor power is indeed stable against perturbations which arise from control rod movement and illustrates nicely that the delayed neutrons and the temperature coefficient of reactivity control the stability of the reactor power The effects of the boiler become apparent only after a time which is long compared with the time required to reach a power peak (~30 to 100 msec) Thus it would be of little value to include a more complicated system of equations to describe the reactor load

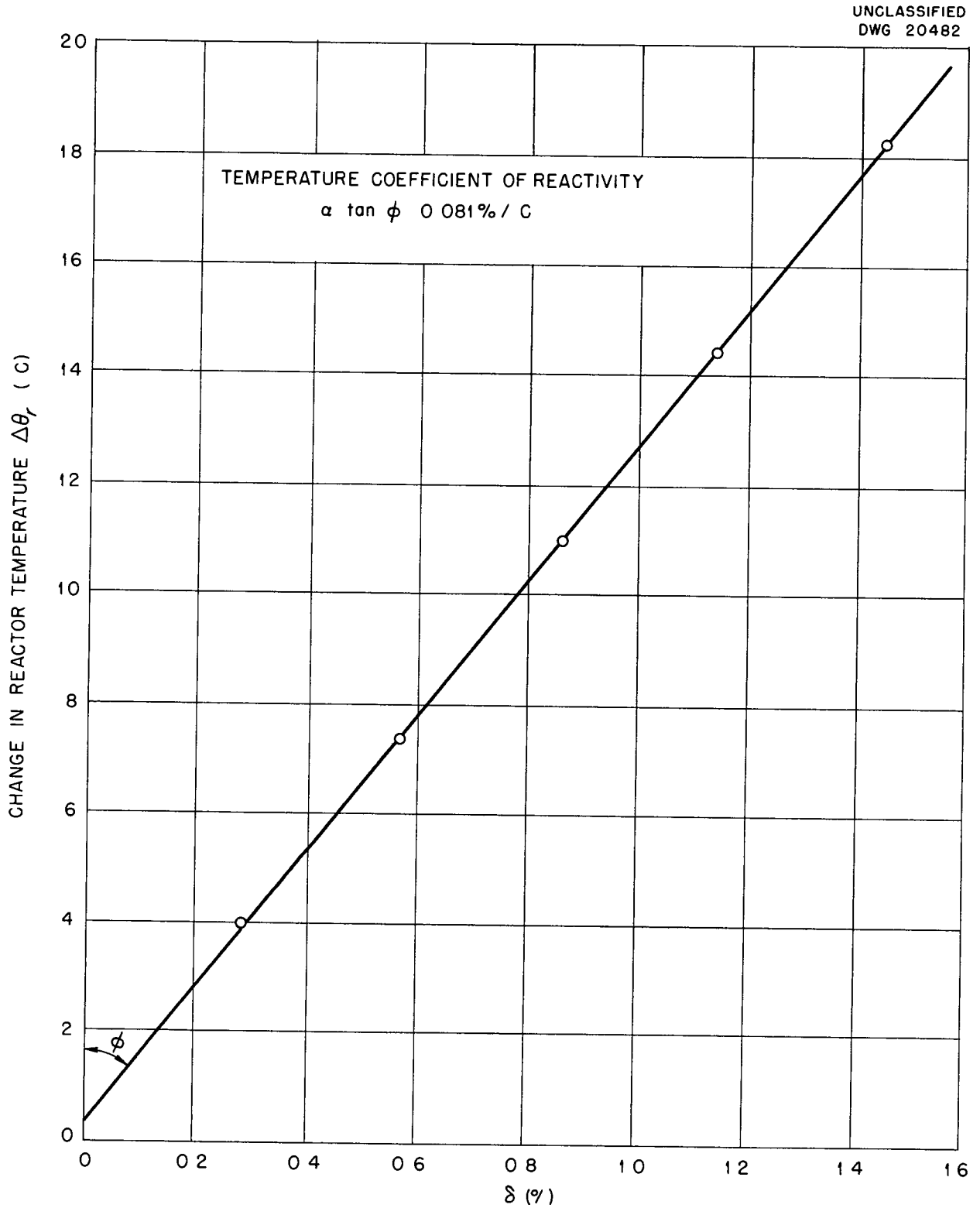

Fig 14 Calibration of Temperature Coefficient Change in reactor temperature coefficient as a function of excess reactivity coefficient

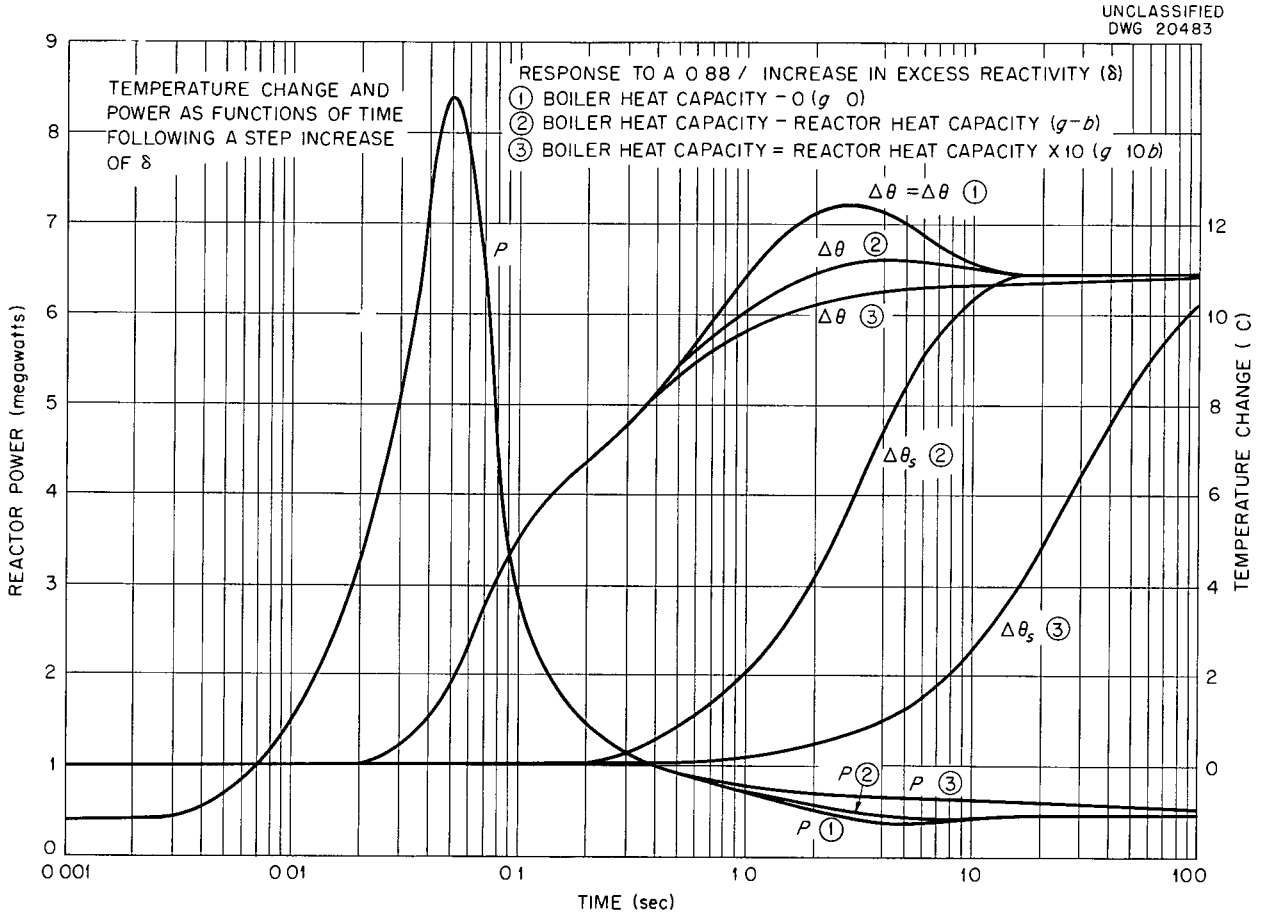

Fig 15 Typical Dynamic Response to a Step Increase in δ Temperature change and power as functions of time following a step increase in δ

The temperatures of the steam and of the reactor will be considered next From Eq 4

$$(29) \qquad a(\theta_r - \theta_s) = P_0 + g\frac{d\theta_s}{dt}$$

Upon combining Eqs 29 and 3 it is seen that

$$(30) \qquad b\frac{d\theta_r}{dt} = P - P_0 - g\frac{d\theta_s}{dt}$$

Therefore if the boiler heat capacity g is zero Eq 29 shows that the difference between the reactor temperature and the boiler temperature is proportional to P_0 which is held constant throughout this set of solutions Thus for a step change in excess reactivity and for $g = 0$ the two temperatures differing by a constant amount will rise in identical fashions For this condition the deviations of the two temperatures from their initial values are shown as Case 1 of Fig 15 Since no change is made in the load P_0 the difference between the two temperatures must have the same value at all times The reactor temperature must change by an amount

$$\Delta\theta_r = \frac{\delta}{a}$$

so the initial and final values of reactor temperature are not the same but the difference between steam temperature and reactor temperature remains constant Note that for this value of g the reactor temperature overshoots its final value slightly The effect of θ_r in Eq 5 then causes the reactor power to undershoot its final value of 0 4 megawatt by a very

small amount The small overshoot of the temperature indicates that the nuclear system has a slight tendency to be oscillatory but this is rapidly damped out When the boiler heat capacity is equal to the reactor heat capacity the steam temperature change lags behind the reactor temperature change in accordance with Eq 29 However when the steam temperature starts to increase since $(P - P_0)$ at this instant is very nearly the same as for Case 1 Eq 30 shows that the reactor temperature begins to have a slower rate of change than in the previous case and in turn causes the P curve to fall off more slowly than in the previous case This sequence of events is shown in Case 2 of Fig 15 Note that there is still a slight overshoot in $\Delta\theta_r$ but that this overshoot is not so large in amplitude as it was previously which indicates that the system is more nearly critically damped Similarly for a boiler heat capacity ten times as great as the reactor heat capacity the change in boiler temperature is simply delayed by an even greater length of time than in Case 2 and the change in reactor temperature takes longer to get up to its final values (cf Case 3 of Fig 15) In this case there is neither an under swing of power nor an overshoot of temperature and thus there is indication that the system is overdamped

A slight deviation from the main line of investigation was made in order to observe a few qualitative facts about the damping of the nuclear system With the delayed neutron networks disconnected a modified set of equations was solved that was equivalent to Eqs 1 through 4 but that had $\beta_i = K_i = 0$ in Eqs 1 and 2 Then when a positive or negative step of δ was inserted with $g = 0$ the solutions to this modified set of equations showed an undamped oscillation of power about the value P_0 The height of the power excursion above P_0 was several times as great as that observed for the same step value of δ when the delayed neutrons were included in the equations For very small values of δ the oscillation was nearly sinusoidal but as δ was increased the half cycle which was less than P_0 began to flatten out and the period of oscillation became long compared with the duration of a high power excursion This effect has been discussed at length in previous reports (cf for example refs 1 2 3 and 4) for the modified set of equations This test qualitatively confirmed the conclusions reached in the previous reports

When values for g other than $g = 0$ are employed the oscillation is rather sharply damped The power excursions disappear entirely after two to five positive peaks depending on the values of P_0 δ and g The largest value for g gives the most damping although the system is still underdamped When the delayed neutrons are added an extremely strong damping effect is observed and in combination with the damping effect of the external system (that is the value of g) the nuclear system can become overdamped as is demonstrated by Case 3 of Fig 15 In the case of the HRE only a small portion of the delayed neutrons is lost from the nuclear reaction when the fuel is circulated through the external piping and this lost portion is accommodated in Eq 1 by including the attenuation factor γ_i Since the delayed neutron concentrations will not be attenuated to any greater extent than this under the conditions of actual operation no further simulator observations were made with the delayed neutrons removed In the event that higher velocities of fuel circulation and larger ratios of fuel time in external system to time in reactor are contemplated a greater percentage of the delayed neutrons will be lost the

---

(1) *HRE Q P g Rep Feb 28 1950* ORNL 630 p 22 26

(2) *H g n R ctor Exp rim t F ibil ty R po t* ORNL 730 p 73 76 (J ly 6 1950)

(3) *HRE Q P g Rep N 30 1950* ORNL 925 p 78 98

(4) T A Welton *et l HRE Qu Prog Rep A g 15 1951* ORNL 1121 p 99 107

power peaks will be higher and the power excursions may continue for several peaks In short the damping action of the delayed neutrons will be greatly reduced and under these conditions the power excursions should be thoroughly investigated in a quantitative manner The simulator can be readily adapted to perform such an investigation

Numerous curves such as the one shown in Fig 15 were obtained for various values of δ and at various levels of P_0 They do not differ qualitatively Quantitatively the height of the power pulses is independent of the value of g but depends upon the values of P_0 and of δ The time required to reach this peak is approximately inversely proportional to the square root of P_0 and is independent of δ and of g Of the information which can be obtained from these curves that of greatest immediate interest is the amplitude of the power surge as a function of the step value of δ for various values of P_0 These data are discussed next

Ratio of Peak Power to Initial Power as a Function of Excess Reactivity The dynamic response of reactor power to step increases in δ has been correlated in Fig 16 to show the ratio of peak power P_{max} to initial power as a function of δ for various values of initial power level P_0 Note that as the initial power level is increased the maximum step values of δ must be reduced so that the amplifier outputs do not become saturated For instance at P_0 = 2 0 megawatts the P_{max}/P_0 ratio at δ = 0 66% is 5 2 This means that the amplifiers are giving a 104 volt signal at maximum power This value of voltage is just about the maximum reliable output obtainable with this particular amplifier design It is therefore impractical to introduce any larger values of δ at this level of initial power

It is interesting to compare the results of Fig 16 with those computed by methods of numerical analysis The two methods of solution give results which are within 3% of each other This is easily within the margin of error which can be expected in reading the graphical output curves of the computer Several of the simplifying assumptions made by the Mathematics Panel to more readily achieve their solutions were checked with the simulator For example the investigation of power peaks with the delayed neutron concentrations held constant and with the boiler heat capacity equal to zero makes the equations investigated with the simulator equivalent to those solved by methods of numerical analysis The results given by the computer under these conditions are within 2% of the results obtained from the computer without these simplifying assumptions the results thus confirm that the assumptions are quite well chosen Furthermore the results achieved with the computer under these assumptions are within 1½% of those achieved by the Mathematics Panel a fact which tends to confirm the accurate operation of the instrument

Dynamic Response to Sudden Decrease in Power Demand The next problem investigated is the dynamic response of the reactor to a sudden decrease in power demand P_0 Figure 17 shows typical curves for the reactor power reactor temperature change and steam temperature change as functions of time following a sudden reduction of power demand from 1 12 to 0 44 megawatts at time $t = 0$ From Eq 29 with $g = 0$, it is readily seen that the steam temperature jumps by the amount $-\Delta P_0/a$ (here = +27 2°C) when the power demand is changed by an amount ΔP_0 Since the reactor heat capacity b is not zero the reactor temperature cannot change instantaneously but does have a finite rate of change as soon as the step ΔP_0 is inserted as may be seen from Eq 30 with $g = 0$ Then as the reactor temperature gradually changes in accordance with Eq 30 the steam temperature changes similarly and the power is forced to a lower value (in accordance with Eq 5) This sequence of events is shown as Case 1 of Fig 17 Note that during the power transient the reactor

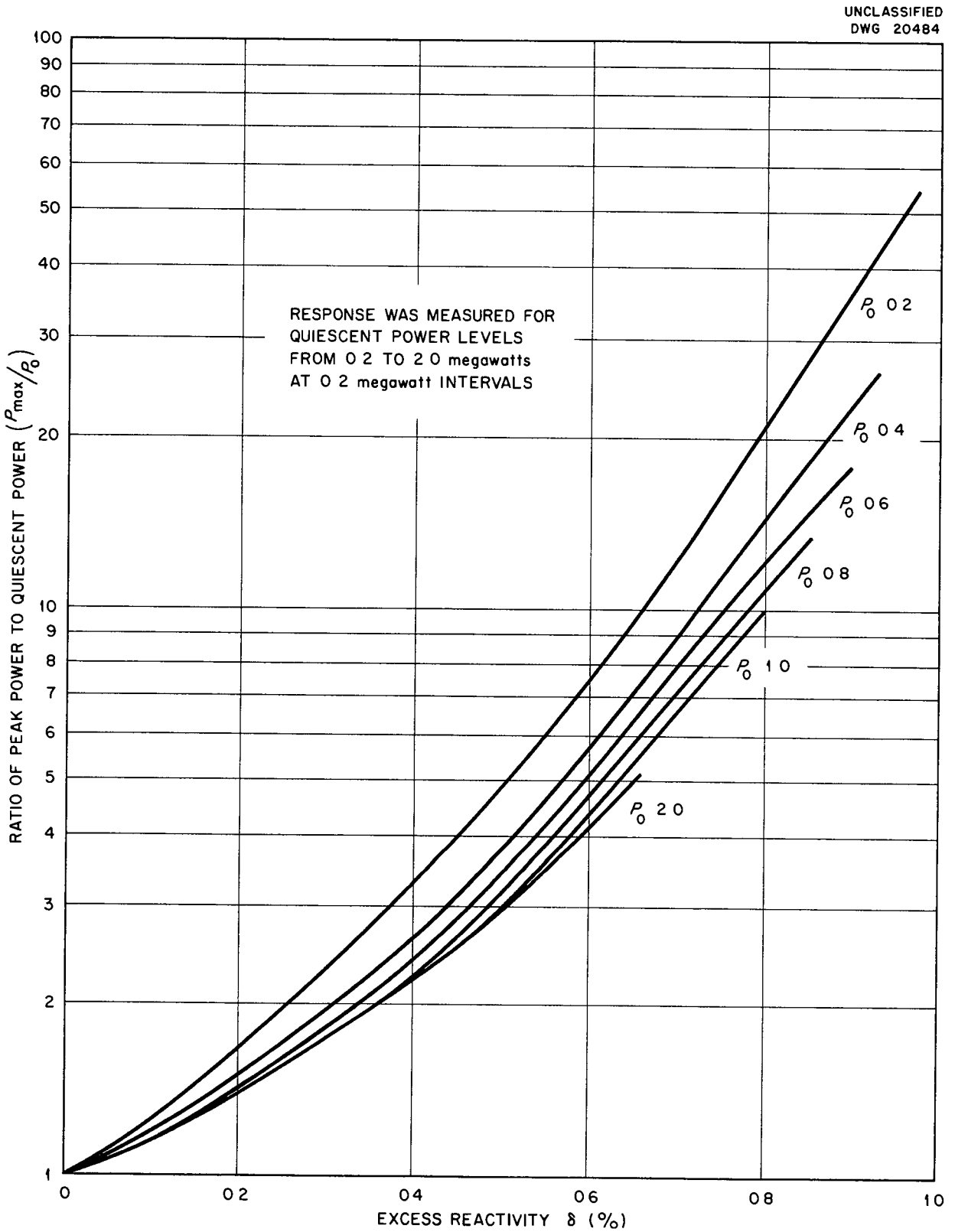

Fig 16 Peak Power Response to a Step Decrease in δ

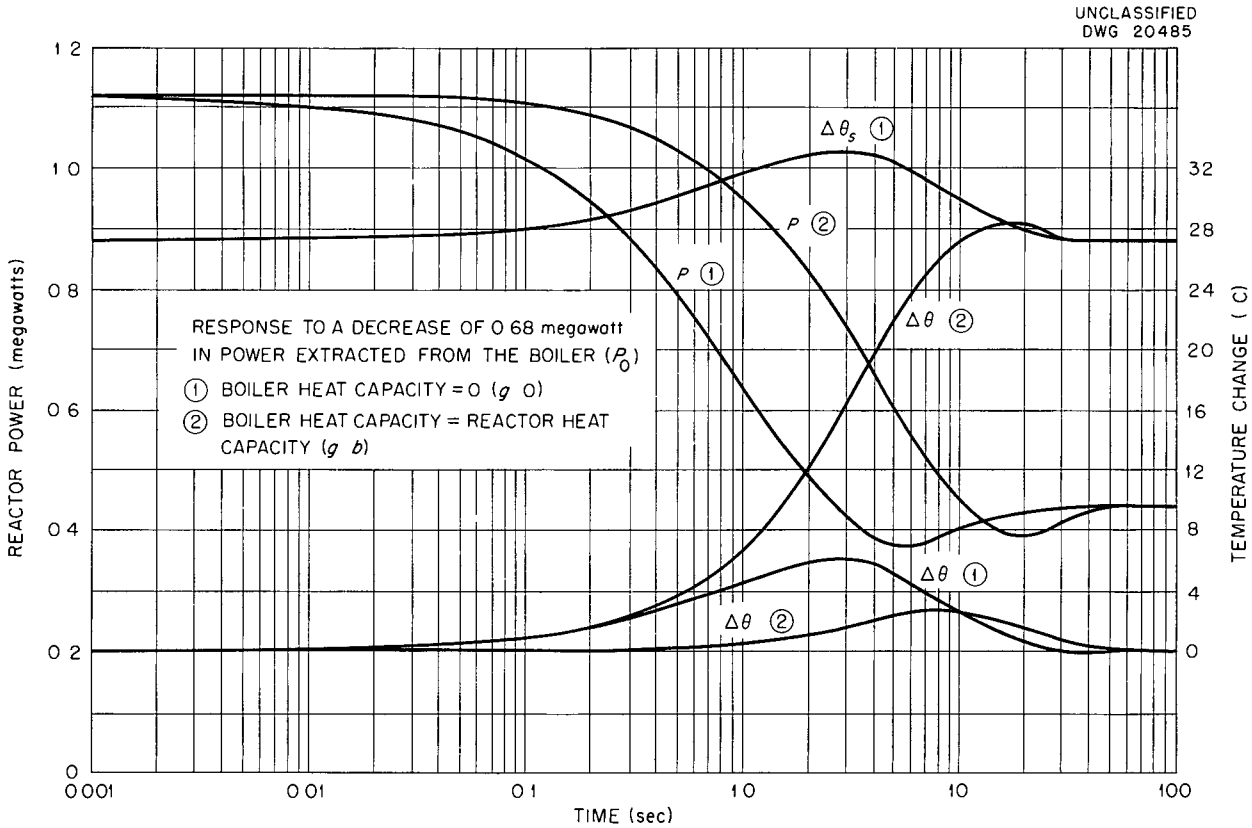

Fig 17 Typical Dynamic Response to a Step Decrease of P_0

temperature is raised slightly above its initial value This causes the reactor power to be reduced to its new value but then the power must under shoot its final value and maintain the undershoot just long enough to restore the reactor temperature to its initial value This case is of little practical interest since in practice the heat exchanger will have some positive nonzero value of heat capacity The example does serve to illustrate the limiting case which would exist if a very small boiler were coupled to the reactor and it does provide conditions under which the interaction of events may easily be correlated to the physical sequence

Case 2 of Fig 17 is a more realistic situation which illustrates the sequence of events when the boiler heat capacity and the reactor heat capacity are identical The main difference between the curves for the two cases is simply that the excursions in power and in temperature are delayed in time as a result of the increased boiler heat capacity The overswing of temperature and the undershoot of power are not so extreme in Case 2 The larger the boiler heat capacity the greater the delay before the excursions of power and temperature take place and the smaller the over shoot of temperature and the under swing in power Only a single over shoot is observed experimentally and thus there is an indication that the system is highly stable as was pointed out previously

The case for boiler heat capacity ten times as large as reactor heat capacity shows the same general characteristics as Case 2 Under these conditions the excursions of steam temperature and of reactor power are delayed so much however that the plot will not fit the time scale of Fig 17 so the case is not shown The excursion of reactor temperature

is almost undetectable in this instance as is the undershoot of power

Numerous curves were taken for different values of P_0 and of ΔP_0 Qualitatively they are identical to the typical curves shown in Fig 17 Quantitatively the magnitudes of the total changes are predictable and are

$$\Delta P = \Delta P_0 \qquad \Delta\theta_s = -\frac{\Delta P_0}{a} \qquad \Delta\theta_r = 0$$

For the case of $g = 0$ the reactor temperature change reaches a peak height of approximately

$$|\Delta\theta_r|_{max} \approx 1\ 6 \left(\frac{-\Delta P_0}{b}\right) \text{ °C}$$

is about 2 8 sec the steam temperature change jumps to its final value and then follows an excursion identical to that for $\Delta\theta_r$ The time scale of events remains unchanged for different values of P_0 and ΔP_0 Similar relationships exist for Case 2 Hence a simple change of the vertical scales of Fig 17 gives dynamic curves for other values of P_0 and ΔP_0 that are within 2% of those obtained experimentally

Ratio of Peak Power to Initial Power as a Function of Steam Temperature Drop The last problem investigated is the response of the reactor power when the fuel circulating pumps falter in their operation When the circulating pumps are stopped the reactor power drops rather quickly to a level which corresponds to the radiation losses of the core Although the reactor radiation loss is not simply a constant but varies with the reactor temperature this detail has been neglected and the radiation loss of the nuclear system has been approximated for this analysis as being a constant 0 18 megawatt (In previous investigations the radiation losses of the reactor core have been neglected they can be regarded as being a constituent part of P_0 under most circumstances)

To simulate the stopping of the pumps the temperature equations are modified to become

$$(3a) \quad b\frac{d\theta_r}{dt} = (P - 0\ 18) - a\theta_r$$

and

$$(4a) \quad g\frac{d\theta_s}{dt} = -(P_0 + a\theta_s)$$

Thus when the pumps stop the reactor power and temperature undergo dynamic excursions which are somewhat similar to the curves for P and $\Delta\theta_r$ shown as Case 1 of Fig 17 The presence of the term $-a\theta_r$ makes Eq 3a somewhat different from Eq 30 so Fig 17 does not portray the dynamic curves exactly Nonetheless the reactor power drops quickly from (P_0 + 0 18) to 0 18 megawatt and the reactor temperature returns to its original value (as determined by the reactivity of the reactor) Meantime the heat exchanger is cut off from the reactor core Since a constant load demand P_0 is still connected to the heat exchanger the steam temperature falls exponentially in accordance with Eq 4a Obviously the rapidity of this drop in boiler temperature depends upon the values of P_0 and of g The larger the boiler heat capacity g the more slowly will the steam temperature drop for a given load P_0 Conversely the larger the steam load the more rapidly will the steam temperature drop for a given heat capacity g These then are the dynamics of stopping the circulating pumps

When the boiler temperature has dropped by a predetermined amount $\Delta\theta_s$ the circulating pumps are restored to normal operation by again changing Eqs 3a and 4a to Eqs 3 and 4 Injecting the cold and hence quite dense fuel into the reactor has an effect similar to that due to a change in excess reactivity Power peaks that are dynamically somewhat similar to those of Fig 15 result The peaks are not exactly like those of Fig 15 however because the fuel does not continue to be cold after the cycling of fuel resumes so this condition is not like inserting a step change of δ To resume pumping after the fuel in

the external loop has cooled a predetermined amount is thus like inserting a small δ step which decreases to zero with time If the case of $g = 0$ were considered here starting the pumps would be like inserting an impusle of δ since the fuel would warm up instantaneously This case presents difficulties in accurately controlling the steam temperature drop while the pumps are stopped so since the case is not one which will be encountered in practice it is not considered further When the external system has a nonzero value of heat capacity the injection of cold fuel is like a small δ step which decays exponentially the rate of decay depending on the values of P_0 and of g Physically this simply indicates that the temperature of the fuel continues to be pulled down below its normal value until it heats up the boiler piping and all the materials which contribute to the boiler heat capacity Thus in this instance the height of the power peaks depends slightly upon the value of boiler heat capacity

The ratio of peak power to initial power is plotted in Fig 18 as a function of steam temperature change Note that the curves follow the same trend with changes in P_0 as do the curves of Fig 16 Note also that the power peak is not influenced so greatly by the boiler heat capacity g as by the steam temperature drop $\Delta\theta_s$ and by the level of power extraction P_0 This effect is particularly apparent at larger values of P_0 where the excursions are identical in height for the two values of boiler heat capacity At smaller values of P_0 the value of boiler heat capacity has a greater effect However as P_0 is reduced beyond 0 4 megawatt the presence of the radiation losses begins to mask the effects of the cold fuel and the ratio again becomes smaller

SUMMARY OF EXPERIMENTAL RESULTS

The steady state solutions for Eqs 2 through 5 show that the static reactor power level is fixed by the losses of the nuclear system plus the power extracted from the system These solutions show that the temperature of the reactor is fixed by the reactivity level The dynamic solutions show that the power and the temperature of the reactor undergo only rather slow and not very violent excursions in the event that the power demand is suddenly reduced or the fuel circulating pumps falter in their operation When the control rods are suddenly removed the reactor power undergoes a single violent surge and then settles down rather quickly to its static value (as shown in Figs 15 and 16)

Actual operation of the reactor since the above data were taken confirms that the computer is qualitatively correct Several of the coefficient values which at the time the computer was built represented the best estimates of the prospective values have since proved to be slightly in error The computer has been modified to accommodate these new coefficient values and further data are being taken by the people associated with the HRE project

The fact that the HRE is now in operation is not sufficient reason to deem the usefulness of the reactor simulator at an end The computer can be modified to give answers within the accuracy required for engineering design to any problem which requires solutions to equations of the following general type

$$\frac{dx}{d\lambda} = a_1 x + a_2 xy + \sum_{i=0}^{n} e_i z_i$$

$$\frac{dy}{d\lambda} = a_4 x + a_5 y + a_6 \; f(\lambda)$$

and

$$\frac{dz_i}{d\lambda} = b_i z_i + c_i x + d_i y$$

$$i = 1 \quad 2 \quad 3 \qquad n$$

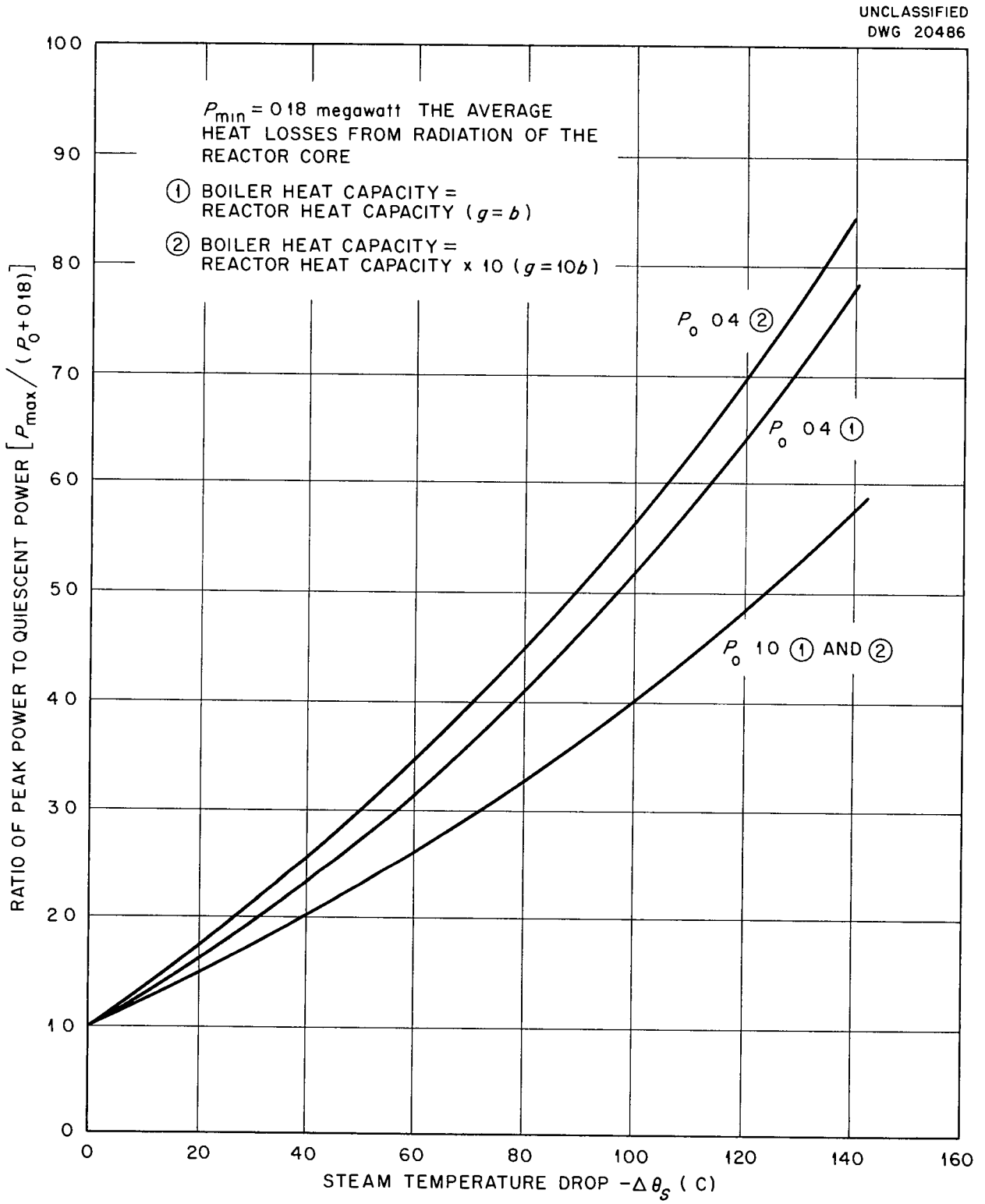

Fig 18 Peak Power Response as a Function of Steam Temperature Drop When Circulating Pumps Stop and Then Resume Operation

where λ = a constant times time and the a s b s c s d s and e s can be positive or negative constants or certain functions of λ Together with a whole class of engineering problems in this category any reactors of the homogeneous type which may be proposed for future construction should certainly present just such a problem as the computer is designed to solve

Appendix

SOME MATHEMATICAL CONSIDERATIONS

DERIVATION OF THE EXCESS REACTIVITY CALIBRATION EQUATION

Initially the reactor power is at a constant value so $\dot{P} = 0 = \dot{K}_i$ where the dot superscript indicates differentiation with respect to time Furthermore

$P = P_1 \quad \theta = \theta_{r_0} \quad K_i = K_{i_0}$ and $\delta = \delta_0$

at that time Upon putting these values into Eqs 1 and 2 which state that

$$\text{(A1)} \quad P = \left[\delta - \sum_{i=1}^{5} \beta_i - \alpha\left(\theta_r - \theta_{r_0}\right)\right]\frac{P}{\tau} + \sum_{i=1}^{5} \gamma_i \lambda_i K$$

and

$$\text{(A2)} \quad \dot{K} = -\lambda_i K + \frac{\beta}{\tau} P$$

it is seen that

$$\text{(A3)} \quad -\left(\delta_0 - \sum_{i=1}^{5} \beta_i\right)\frac{P_1}{\tau} = \sum_{i=1}^{5} \gamma_i \lambda_i K_{i_0}$$

and

$$\text{(A4)} \quad \lambda_i K_{i_0} = \frac{\beta_i}{\tau} P_1$$

When a small negative step-change Δ is introduced in the excess reactivity δ then p can be defined as the subsequent change in reactor power Thus when

$$\delta = \delta_0 + \Delta$$
$$P = P_1 + p$$

where both p and Δ are negative quantities If the reactor temperature and the delayed neutron concentrations may be assumed to remain constant throughout the period of time required for the excursion p to take place the following equation results

$$P = p = \left[\delta_0 + \Delta - \sum_{i=1}^{5} \beta - \alpha\left(\theta_{r_0} - \theta_{r_0}\right)\right]\frac{P_1 + p}{\tau} + \sum_{i=1}^{5} \gamma_i \lambda_i K_{i_0}$$

Now by using Eq A3 it is seen that

$$p = \left(\delta_0 + \Delta - \sum_{i=1}^{5} \beta\right)\frac{P_1}{\tau} + \left(\delta_0 + \Delta - \sum_{i=1}^{5} \beta_i\right)\frac{p}{\tau} - \left(\delta_0 - \sum_{i=1}^{5} \beta_i\right)\frac{P_1}{\tau}$$

or

$$\text{(A5)} \quad p = \frac{\Delta}{\tau} P_1 + \left(\delta_0 + \Delta - \sum_{i=1}^{5} \beta_i\right)\frac{p}{\tau}$$

Now multiplying Eq A4 by γ_i summing over i and equating the result with Eq A3 gives

$$-\left(\delta_0 - \sum_{i=1}^{5} \beta\right)\frac{P_1}{\tau} = \sum_{i=1}^{5} \gamma_i \lambda_i K_0 = \frac{P_1}{\tau}\sum_{i=1}^{5} \gamma_i \beta$$

so

$$\text{(A6)} \quad \delta_0 - \sum_{i=1}^{5} \beta_i = -\sum_{i=1}^{5} \gamma_i \beta_i$$

Substituting Eq A6 into Eq A5 gives

$$p = \frac{\Delta}{\tau} P_1 + \left(\Delta - \sum_{i=1}^{5} \gamma \beta_i\right)\frac{p}{\tau}$$

which has the solution

$$\text{(A7)} \qquad p = \frac{\Delta P_1}{\sum_{=1}^{5} \gamma \beta - \Delta} \left\{ 1 - \exp\left(- \frac{-\Delta + \sum_{=1}^{5} \gamma_i \beta}{\tau} \right) \right\}$$

Finally the maximum value of p occurs when the exponential term approaches zero so that

$$p_{m\ x} = \frac{\Delta P_1}{-\Delta + \sum_{=1}^{5} \gamma_i \beta_i}$$

or

$$\text{(A8)} \qquad \Delta = \frac{p_m \sum_{i=1}^{5} \gamma_i \beta_i}{P_1 + p_{m\ x}}$$

which is the form used in Eq 28 As long as

$$\sum_{i=1}^{5} \gamma_i \beta_i >> \Delta$$

the above equation will hold even for $\Delta > 0$ However if Δ is kept less than zero the assumptions that the reactor temperature and the delayed neutron concentrations do not change in the time required for P to go from P_1 to $(P_1 + p_m)$ are assured of being correct

The time required to reach $p_{m\ x}$ is controlled by the time constant

$$\left(-\Delta + \sum_{i=1}^{5} \gamma_i \beta_i \right) \frac{1}{\tau}$$

Consider the case when $\Delta = -1\% = -0\ 01$ then

$$\frac{1}{\tau} \left(-\Delta + \sum_{i=1}^{5} \gamma_i \beta_i \right)$$

$$= \frac{1}{10^{\ 4}} (0\ 01 + 0\ 00665)$$

$$= 166\ 5\ \text{sec}^{\ 1}$$

Thus in 0 024 sec (= 4/166 5) p will be within 2% of having reached $p_{m\ x}$

Because of the large heat capacity of the reactor and the comparatively long time constants associated with the delayed neutron concentrations no appreciable change in either can have taken place in this length of time Thus Eq A8 is a good approximation when negative values of Δ are used especially if $|\Delta| \geqq 1\%$

The initial conditions for Eqs 3 and 4 should also be pointed out at this time These equations are

$$\text{(A9)} \qquad b\theta = P - a(\theta_r - \theta)$$

and

$$\text{(A10)} \qquad g\theta = a(\theta_r - \theta) - P_0$$

In the initial steady state condition

$$\theta_s = 0 \quad \text{so } P_0 = a\left(\theta_{r_0} - \theta_{\ 0}\right)$$

from Eq A10 and

$$\theta_r = 0 \quad \text{so } P = a\left(\theta_{\ 0} - \theta_{\ 0}\right) = P_1$$

from Eq A9 Thus $P_1 = P_0$ as mentioned previously (cf chap 2)

POWER AND TEMPERATURE EXCURSIONS FOR A RAMP INPUT OF δ

Since the excursion of power as a function of step insertions in excess reactivity has been presented in chapter 3 it is also interesting to see the effect on reactor power of introducing δ as a ramp function of time The following is a mathematical analysis of this case

Equations 5 4 and 3 state

$$\text{(A11)} \qquad P = \frac{1}{\tau} \left[\delta - \sum_{i=1}^{5} \beta_i (1 - \gamma_i) - a\left(\theta_r - \theta_{r_0}\right) \right] P - \sum_{i=1}^{5} \gamma K_i$$

(A9) $$b\theta = P - a(\theta_r - \theta)$$

and

(A10) $$g\theta_s = a(\theta_r - \theta_s) - P_0$$

If $\delta = \delta_0 + Ct$ where C is a constant rate of change of excess reactivity and if enough time has elapsed since the start of this ramp function (that is at $t = 0$) for the reactor power to reach a steady state condition then in the steady state $P = K_i = 0$ so from Eq A11

$$\delta_0 + Ct - \sum_{i=1}^{5} \beta_i(1 - \gamma_i) - a\left(\theta_r - \theta_{r_0}\right) = 0$$

but from Eq A6

$$\delta_0 - \sum_{i=1}^{5} \beta_i(1 - \gamma_i) = 0$$

so

$$Ct - a\left(\theta_r - \theta_{r_0}\right) = 0$$

Therefore

(A12) $$\theta_r = \theta_{r_0} + \frac{C}{a} t$$

Substitution of Eq A12 in Eq A10 gives

$$g\theta = a\left(\theta_0 + \frac{C}{a} t - \theta\right) - P_0$$

which has the solution

(A13) $$\theta_s = \theta_{r_0} - \frac{P_0}{a} - \frac{Cg}{aa} + \frac{C}{a} t - \left[\theta_{r_0} - \frac{P_0}{a} - \frac{Cg}{aa}\right] \epsilon^{(\ /g)t}$$

Then provided that enough time has elapsed

(A14) $$\theta_s = \theta_{r_0} - \frac{P_0}{a} - \frac{Cg}{aa} + \frac{C}{a} t$$

in the steady state

Before continuing this analysis the question of just how much elapsed time is enough should be resolved In Eq A13 the time constant g/a has the values 0 7 and 70 sec corresponding respectively to $g = 0\ b$ and $10b$ Since $\epsilon^{-4} = 0\ 0183$ the term will be less than 2% removed from its final value after the passage of four time constants Thus 0 28 or 280 sec must elapse depending on the value chosen for g before θ has recovered from the transient resulting from starting the ramp function of δ However it was assumed originally that enough time had passed for Eq A11 to reach a steady state condition and this implied that Eq A2 was at equilibrium The slowest delayed neutron group considered here has a time constant $(1/\lambda_5)$ of 31 8 sec so about 127 2 sec must intervene between the time when the ramp starts and the time when Eq A11 approaches equilibrium Both equilibriums must exist for this analysis to apply therefore the amount of time which must elapse is the larger of the two values or 127 sec for $g = 0\ b$ and 280 sec for $g = 10b$ Since C must be a constant this required lapse of time together with the available range of variation in δ sets a practical limit on the maximum value of C

Since it is known that initially $P = P_0$ it can be assumed that the steady-state value of P with the ramp input of δ is

(A15) $$P = P_0 + p$$

Also differentiating Eq A12 gives

(A16) $$\theta_r = \frac{C}{a}$$

Now substituting Eqs A12 A14 A15 and A16 into Eq A9 gives

$$b\frac{C}{a} = P_0 + p - a\left[\theta_{r_0} + \frac{C}{a} t - \theta_{r_0} + \frac{P_0}{a} + \frac{Cg}{aa} - \frac{C}{a} t\right] = p - \frac{Cg}{a}$$

Thus

(A17) $$p = \frac{C}{a}(b + g)$$

Hence it can be stated in general that for a ramp input of δ p the steady stage offset in reactor power from the initial value P_0 is

$$p = \frac{\text{rate of change of } \delta \text{ times the sum of boiler and reactor heat capacities}}{\text{temperature coefficient of reactivity}}$$

Some simple tests with the computer confirm this analysis although these tests show that the values given above for elapsed time tend to be conservative

SOME MATHEMATICAL DIFFERENCES BETWEEN THE FOREGOING ANALYSES AND THE ACTUAL COMPUTER OPERATION

It is advisable to point out at this time that as actually performed with the computer the initial reactor temperature (call it θ_{r_1}) is not equal to θ_{r_0} Furthermore

$$\delta \neq - \sum_{i=1}^{5} \beta_i (1 - \gamma_i)$$

initially as may have been gathered from Eq A6 but instead $\delta = 0$ initially Nevertheless it can be readily seen from Eq 5

$$P = \left[\delta - \sum_{=1}^{5} \beta_i (1 - \gamma \ ) - \alpha\left(\theta_r - \theta_{r_0}\right) \right] \frac{P}{\tau} - \sum_{=1}^{5} \gamma_i K$$

that the stable initial condition demands that

$$\alpha\left(\theta_{r_1} - \theta_{r_0}\right) = - \sum_{=1}^{5} \beta \ (1 - \gamma \ )$$

which may then be defined as δ_0 Thus $\delta = 0$ initially and a slight lowering of the reactor temperature produces δ_0 the reactivity required to maintain criticality It is easily seen that this modification in no sense changes the foregoing analyses

Since the discussion of reactor temperature as a modifying factor to the excess reactivity coefficient has arisen several other facets of this phenomenon will be considered

DERIVATION OF THE CALIBRATION EQUATION FOR THE TEMPERATURE COEFFICIENT OF REACTIVITY

In the calibration of α the temperature coefficient of reactivity use was made of the bracketed term in Eq 5 or Eq A11 In the steady state condition $P = 0 = K_i$ and this bracketed term must be identically equal to zero Thus if θ_{r_1} is the initial temperature at steady state with $\delta = 0$ then

$$\text{(A18)} \quad - \sum_{i=1}^{5} \beta_i (1 - \gamma \ ) - \alpha\left(\theta_{1} - \theta_{r_0}\right) \equiv 0$$

Now if a change in the excess reactivity coefficient (= δ) is introduced the final temperature at steady state become θ_2 and

$$\text{(A19)} \quad \delta - \sum_{=1}^{5} \beta \ (1 - \gamma_i) - \alpha\left(\theta_{2} - \theta_{r_0}\right) \equiv 0$$

If $\Delta\theta_r = \theta_{r_2} - \theta_{r_1}$ and Eq A18 is subtracted from Eq A19

$$\delta = \alpha\left(\theta_{r_2} - \theta_{r_1}\right) = \alpha \ \Delta\theta_r$$

Since δ is readily calibrated by other means the relation

$$\text{(A20)} \qquad \alpha = \frac{\delta}{\Delta\theta_r}$$

can be used to experimentally determine the precise value of α

EVALUATION OF THE MAXIMUM TEMPERATURE EXCURSION

With the calibrated values of δ_{max} and α known it is possible to predict the maximum excursion of temperature which the computer must be prepared to undergo (cf chap 2) From Eq A20 and Figs 12 and 14 the calibration

curves it is seen that

$$|\Delta\theta_r|_{max} = \frac{\delta_{max}}{\alpha} = \frac{1\ 52\%}{0\ 00081} = 18\ 8°C$$

Since the zero point of temperature so far as the computer is concerned is set at 170°C then θ normally operates in the neighborhood of 62 5 and never becomes smaller than 43 7 nor larger than 81 3 These temperature limits correspond respectively to E_r = 10 9 volts and 20 3 volts and thus assure that this voltage input to the multiplier always remains positive and well within the most accurate range of the multiplier (cf chap 2)

DISCUSSION OF INACCURACIES IN THE COMPUTER

In practice the computer contains certain inaccuracies those connected with the multiplier are of the greatest consequence There are however other inaccuracies present For instance to assume that the input potential of one of the d c amplifiers does not differ from ground potential is slightly erroneous Inaccuracies of this type may be reduced to as little as 0 01% by simply increasing the gain of the amplifier and by carefully measuring and matching the resistance and capacitance values in the analog circuits (cf for example refs 1 and 2) In this computer the accumulated inaccuracies of this nature are calculated to be no greater than 1% of the reading On the other hand as was learned from tests and exhaustive measurements the inaccuracy of the multiplier is slightly less than 2%

The major inaccuracy of the multiplier appears as a slight decrease in α when the multiplier s output voltage is caused to increase Thus the approximation that α is a constant is reasonably accurate for this computer but it is only a first order approximation To a second order of approximation Eq 5 or Eq A11 should read

$$\text{(A21)}\quad P = \left[\delta - \sum_{i=1}^{5} \beta\,(1-\gamma) - \alpha(\theta_r\ P)\ \theta_r + \alpha_0\theta_{r_0}\right]\frac{P}{\tau} - \sum_{i=1}^{5} \gamma K$$

where

$$\text{(A22)}\quad \alpha(\theta\ P) = \alpha_0[1 + \epsilon(\theta_r\ P)] = \alpha_0 + \left.\frac{\partial\alpha}{\partial\theta}\right|_{\theta_{r_0}} \Delta\theta + \left.\frac{\partial\alpha}{\partial P}\right|_{P_1} \Delta P$$

where $\Delta\theta_r$ is $(\theta_r - \theta_{r_0})$ an increment of θ_r in the vicinity of θ_{r_0} and ΔP is $(P - P_1)$ an increment of P in the vicinity of P_1 Note that the output of the multiplier is now $-\alpha(\theta_r\ P)\,\theta\ P/\tau$ while the constant portion of the temperature term produced in the computer by a precision resistor network and not subject to the nonlinearity in α due to the multiplier is $\alpha_0\theta_{r_0}P/\tau$

As is pointed out in the preceding section the range of operation for θ_r is selected such that

$$\left.\frac{\partial\alpha}{\partial\theta}\right|_{\theta_{r_0}} \approx 0$$

Furthermore $\Delta\theta_r$ is restricted to a relatively small range so that

$$\text{(A23)}\quad \alpha(\theta_r\ P) \approx \alpha(P) = \alpha_0 + \left.\frac{\partial\alpha}{\partial P}\right|_{P_1} \Delta P$$

In order for the α_0 in Eq A21 and that in Eqs A22 and A23 to have the same value a reference level of power say P_1 = 0 6 megawatt is

(1) D McD n ld *R Sci I t* **21** 154 57 (1950)

(2) G A K r d T M K rn *El ctro ic An log C mp te* McG w H ll New Y rk 1952

selected then $\alpha(\theta_{r_0}\ 0\ 6) \equiv \alpha_0$ and the α_0 of Eq A21 is given this value Then Eq A23 may be modified to read

$$\text{(A24)} \quad \alpha(\theta\ P) \approx \alpha_0 + \frac{\partial\alpha}{\partial P}\,[P - 0\ 6]$$

where $\partial\alpha/\partial P$ is now averaged over the range from P to 0 6 megawatt Thus it is apparent that the expression used in calibrating δ (that is Eqs 28 or A8) depends to a slight degree on the level of power demand P_0 at which the calibration is made Furthermore the equilibrium condition for Eq 5 or A11 depends slightly upon the power level which indicates that δ_0 is a function of P in the same fashion that α is Anyway by analysis which is a little more detailed and involved than can be included in this report it can be shown that Fig 14 is simply a good determination of the value α_0 Also a calibration curve of δ for each power level studied was used to give the true value of δ inserted Figure 14 is the calibration at 0 6 megawatt while the values from 0 2 to 2 0 megawatts are included within the spread of data shown there Since the reactor power returns to its initial value the equilibrium determinations are correct as shown in the dynamic curves for a positive step in δ since α decreases slightly at higher power levels the power peaks tend to be a little higher than they would be without this nonlinearity Comparison of the results of Fig 16 with the results obtained by the Mathematics Panel using the Bureau of Standards digital computer (SEAC) shows that Fig 16 is less than 1 5% higher than the Mathematics Panel s results Therefore it may be stated that this nonlinearity is so slight as to be of little consequence The nonlinearity can readily be corrected by insertion of a properly designed feedback amplifier instead of the catnode follower But the temperature coefficient of reactivity of the reactor itself was expected to behave in much this same fashion (as indeed it has) so the corrective measures were advisedly *not* taken in the design of this multiplier