[redacted]

CENTRAL RESEARCH LIBRARY
DOCUMENT COLLECTION

MARTIN MARIETTA ENERGY SYSTEMS LIBRARIES
3 4456 0349605 4

ORNL 1642
Reactors-Research and Power

DECLASSIFIED
CLASSIFICATION CHANGED TO: AEC - 4-12-62
BY AUTHORITY OF: 8-10-62
BY: A. Bowman

[redacted]

AEC RESEARCH AND DEVELOPMENT REPORT

AQUEOUS HOMOGENEOUS REACTORS FOR PRODUCING CENTRAL-STATION POWER

R. B. Briggs

CLASSIFICATION CHANGED TO: CONFIDENTIAL UNCLASSIFIED
BY AUTHORITY OF: 7/19/69
See Declassification Record Card for Complete Information On Each Copy.

CENTRAL RESEARCH LIBRARY
DOCUMENT COLLECTION
LIBRARY LOAN COPY
DO NOT TRANSFER TO ANOTHER PERSON
If you wish someone else to see this document, send in name with document and the library will arrange a loan.

OAK RIDGE NATIONAL LABORATORY
OPERATED BY
CARBIDE AND CARBON CHEMICALS COMPANY
A DIVISION OF UNION CARBIDE AND CARBON CORPORATION
UCC
POST OFFICE BOX P
OAK RIDGE, TENNESSEE

[redacted]

[redacted]

[redacted]

4A

ORNL-1642

[redacted]

Contract No. W-7405-eng-26

Reactor Experimental Engineering Division

AQUEOUS HOMOGENEOUS REACTORS FOR PRODUCING CENTRAL-STATION POWER

R. B. Briggs

Major Contributors

P. N. Haubenreich
J. P. Sanders
R. E. Aven
F. C. Zapp
C. L. Segaser
R. H. Chapman
W. Terry
N. F. Lansing

DATE ISSUED

MAY 4 1954

OAK RIDGE NATIONAL LABORATORY
Operated by
CARBIDE AND CARBON CHEMICALS COMPANY
A Division of Union Carbide and Carbon Corporation
Post Office Box P
Oak Ridge, Tennessee

[redacted]

MARTIN MARIETTA ENERGY SYSTEMS LIBRARIES

3 4456 0349605 4

[redacted]

INTERNAL DISTRIBUTION

1. C. E. Center
2. Biology Library
3. Health Physics Library
4-5. Central Research Library
6. Reactor Experimental Engineering Library
7-11. Laboratory Records Department
12. Laboratory Records, ORNL R.C.
13. C. E. Larson
14. L. B. Emlet (K-25)
15. J. P. Murray (Y-12)
16. A. M. Weinberg
17. E. H. Taylor
18. E. D. Shipley
19. C. E. Winters
20. F. C. VonderLage
21. R. C. Briant
22. J. A. Swartout
23. S. C. Lind
24. F. L. Culler
25. A. H. Snell
26. A. Hollaender
27. M. T. Kelley
28. W. J. Fretague
29. G. H. Clewett
30. K. Z. Morgan
31. T. A. Lincoln
32. A. S. Householder
33. C. S. Harrill
34. D. S. Billington
35. D. W. Cardwell
36. E. M. King
37. R. N. Lyon
38. J. A. Lane
39. A. J. Miller
40. R. B. Briggs
41. A. S. Kitzes
42. O. Sisman
43. R. W. Stoughton
44. C. E. Graham
45. W. R. Gall
46. H. F. Poppendiek
47. S. E. Beall
48. J. P. Gill
49. D. D. Cowen
50. W. M. Breazeale (consultant)
51. R. A. Charpie
52. R. E. Aven
53. P. N. Haubenreich
54. J. P. Sanders
55. C. L. Segaser
56. F. C. Zapp
57. J. R. McWherter
58. R. H. Chapman
59. P. C. Zmola
60. M. C. Edlund
61. H. C. Claiborne
62. D. E. Ferguson
63. F. R. Bruce
64. E. C. Miller
65. E. G. Bohlmann
66. H. F. McDuffie
67. C. H. Secoy
68. E. G. Struxness
69. R. VanWinkle
70. P. M. Reyling
71. G. C. Williams

EXTERNAL DISTRIBUTION

72. AF Plant Representative, Burbank
73. AF Plant Representative, Seattle
74. AF Plant Representative, Wood-Ridge
75. ANP Project Office, Fort Worth
76-86. Argonne National Laboratory
87. Armed Forces Special Weapons Project (Sandia)
88. Armed Forces Special Weapons Project, Washington
89-93. Atomic Energy Commission, Washington
94. Battelle Memorial Institute
95-97. Brookhaven National Laboratory

[redacted]

[redacted]

98. Bureau of Ships
99-104. Carbide and Carbon Chemicals Company (Y-12 Plant)
105. Chicago Patent Group
106. Chief of Naval Research
107. Commonwealth Edison Company
108. Department of the Navy – Op-362
109. Detroit Edison Company
110-114. duPont Company, Augusta
115. duPont Company, Wilmington
116. Foster Wheeler Corporation
117-119. General Electric Company (ANPP)
120-123. General Electric Company, Richland
124. Hanford Operations Office
125. Iowa State College
126-129. Knolls Atomic Power Laboratory
130-131. Los Alamos Scientific Laboratory
132. Massachusetts Institute of Technology (Kaufmann)
133. Monsanto Chemical Company
134. Mound Laboratory
135. National Advisory Committee for Aeronautics, Cleveland
136. National Advisory Committee for Aeronautics, Washington
137. Naval Research Laboratory
138-139. New York Operations Office
140-141. North American Aviation, Inc.
142. Nuclear Development Associates, Inc.
143. Patent Branch, Washington
144-150. Phillips Petroleum Company
151. Powerplant Laboratory (WADC)
152. Pratt & Whitney Aircraft Division (Fox Project)
153. Rand Corporation
154. San Francisco Operations Office
155. Sylvania Electric Products, Inc.
156. USAF Headquarters
157. U. S. Naval Radiological Defense Laboratory
158-159. University of California Radiation Laboratory, Berkeley
160-161. University of California Radiation Laboratory, Livermore
162. Walter Kidde Nuclear Laboratories, Inc.
163-168. Westinghouse Electric Corporation
169-183. Technical Information Service, Oak Ridge

[redacted]

[redacted]

PREFACE

The following account of the outlook for power production by aqueous homogeneous reactor systems is purposely conservative. This conservatism comes naturally because in the many months it has taken to complete the report the gratifyingly high innage of the HRE, the extremely encouraging out-of-pile corrosion data, and the HRE-demonstrated success of Cu^{++} recombination have created an atmosphere of intense optimism around the Homogeneous Reactor Project which, properly, the Laboratory did not choose to reflect in this report. The conservatism in this report is evidenced, for example, as follows:

1. It was assumed that the maximum flow velocities could be nowhere more than 25 fps; extensive out-of-pile corrosion tests show that 70 fps is tolerable, at least in the dilute core system of the two-region arrangements.

2. The specific power per liter of D_2O is held to 11 kw/liter; this is a result of the conservative flow-velocity assumption and may be too low by a factor of 2.

3. The specific power in the core of the two-region system is held to 100 kw/liter. Actually, with Cu^{++}-induced homogeneous recombination, there is no obvious limit to the specific power which can be extracted from the core. The probable limit, as seen now, may be irregularities in the flow. Such irregularities would so increase the residence time in part of the core system that local boiling would start; this would cause "rough" operation of the reactor. In principle, if the flow pattern is smooth enough and if the velocities are high enough, the power levels at which smooth operation would cease could be extraordinarily high.

An estimate of how these nonconservative projections affect the economic outlook is given briefly in Table 2 of the report. As shown there, the economic picture is considerably improved by such optimism.

In a sense, however, the conservatism of the report is of second order. There are still first-order basic questions – radiation corrosion and the reliability of equipment being the most important – on which the feasibility of at least these embodiments of homogeneous reactors depends. At face value, the HRE corrosion data are most encouraging in that they indicate no enhancement of corrosion due to radiation; however, it must be conceded that static in-pile tests could possibly be interpreted as indicating enhanced corrosion. Consequently, the forthcoming in-pile loop test results are being awaited with great interest.

With respect to equipment reliability, the HRE has had no high-pressure leak since it went to high power, the radioactivity of the fluid makes the leak many times easier to detect (and, of course, more dangerous) than in an ordinary chemical system, and the principle of underwater maintenance described in the report ought to make system maintenance feasible.

The estimated costs of power from the HR system are adequately low; in fact, the projected costs in Table 2 for an optimistic system are as low as have been responsibly claimed in any reactor system. In this respect the aqueous system is much like the other power reactors.

The broad advantage of the homogeneous system stems not from any presumed, and dimly estimated, cost advantage but from, first, its extremely great nuclear stability and, second, being a chemical system, from its extraordinary developmental flexibility and potentiality. Two examples will illustrate this. First is the copper recombination which was an unsuspected development; second is the again unexpected observation that the fission products and the plutonium would come out of the solution simply because they are insoluble at high temperature. This observation once more raises the long-term possibility of operating such systems with significantly less radioactivity than would be contained in a heterogeneous system of the same power. These examples suggest that while the exact nature of future improvements is as yet unknown, the enormous chemical flexibility of the system will permit many advances in the course of the development.

Alvin M. Weinberg
Research Director

[redacted]

[redacted]

ACKNOWLEDGMENT

A broad survey of aqueous homogeneous reactors for producing power could not have been made without the assistance of many members of the Laboratory. Much of this assistance is acknowledged by references to memoranda in the bibliography. In addition, D. E. Ferguson provided much of the basis for the chemical processing studies and the analysis of processing costs. E. G. Bohlmann, A. S. Kitzes, and M. C. Edlund, respectively, were consulted frequently regarding corrosion, slurry problems, and nuclear calculations. Many helpful suggestions were received from J. A. Swartout, C. E. Winters, A. M. Weinberg, and J. A. Lane after they reviewed the report.

[redacted]

[redacted]

CONTENTS

PREFACE v

ACKNOWLEDGMENT vii

SUMMARY AND CONCLUSIONS 1

INTRODUCTION 6

AVAILABILITY AND COST OF NUCLEAR FUELS 7

- Requirements for a Large Power Industry 7
- Natural Uranium 7
- Enriched Uranium 9
- Thorium 10
- Heavy Water 11

TECHNOLOGY OF AQUEOUS HOMOGENEOUS POWER REACTORS 12

- General Characteristics of the Reactor Systems 12
- Fuel Systems 12
  - Uranyl sulfate solutions 12
  - Uranyl fluoride solutions 14
  - Uranium trioxide slurries 15
  - Other uranium fuels 16
  - Plutonium fuels 16
  - Thorium solutions 17
  - Thorium slurries 17
  - Fuels for power reactors 18
- Engineering Design of Reactor Plants 19
  - Two-region reactor 20
    - Flowsheet 20
    - Reactor vessel 24
    - Gas separator 24
    - Main heat exchanger 26
    - Main circulating pump 27
    - Catalytic recombiner and high-pressure storage tank 28
    - Gas condenser 28
    - Gas-circulating pump 31
    - Blanket-circulating system 31
    - Valves and piping 31
    - Low-pressure system 32
  - Two-region, 1350-Mw, reactor power plant 32
    - Description of plant 32
    - D_2O inventory 32
    - Power consumption 36
    - Cost of reactor plant 36
    - Effect of changes in plant capacity and operating conditions on plant cost, inventory, and power consumption 36
  - One-region reactor 39
    - Flowsheet 39
    - Equipment 39
  - One-region, 1350-Mw, reactor power plant 39

[redacted]

[redacted]

Description of plant 39
D_2O inventory 45
Power consumption 47
Cost of reactor plant 47
Effect of changes in plant capacity and operating conditions on plant cost, inventory, and power consumption 47
Reactor operation and control 49
Nuclear calculations 50
Turbogenerator Plant 52
Steam cycle 52
Plant cost 52
Chemical Processing of Reactor Fuels 54
Status of chemical processing 54
Selection of processes for power reactors 57
Calcium fluoride process 57
Thorex process 57
Purex process 60
D_2O recovery 60
Processing costs for economics studies 62
Optimum core processing cycles for two-region breeders 63

ECONOMICS OF POWER PRODUCTION 65

Basis for Economics Evaluation 65
General considerations 65
Cost of power in conventional plants 65
Cost basis for nuclear power plants 65
Two-Region Power Breeder 65
Fixed charges on plant investment 65
Operating and maintenance costs 66
Fuel costs 67
Composition of fuel costs 67
Fissile and fertile materials cost 68
Chemical processing and D_2O recovery costs 68
Inventory and losses of fissile and fertile materials 70
D_2O inventory and losses 70
Total fuel costs 70
Total power costs 74
One-Region Power Breeder 75
Fixed charges and operating and maintenance costs 75
Fuel costs 75
Total power costs 78
One-Region, Uranium-Plutonium Reactors 78
Fixed charges and operating and maintenance costs 78
Fuel costs 80
Composition of fuel costs 80
Total fuel costs 82
Total power costs 85
Two-Region, Uranium-Plutonium Reactors 86
Fixed charges and operating and maintenance costs 86
Fuel costs 86
Composition of fuel costs 86

[redacted]

[redacted]

Total fuel costs 89
Total power cost 91

NOMENCLATURE 93

BIBLIOGRAPHY 95

[redacted]

[redacted]

AQUEOUS HOMOGENEOUS REACTORS FOR PRODUCING CENTRAL-STATION POWER

R. B. Briggs

SUMMARY AND CONCLUSIONS

Aqueous homogeneous reactors are examined from the standpoint of producing central-station power. Included are the materials requirements for a large power industry, a review of raw materials supplies, a status report on the technology of aqueous homogeneous systems, and a comparison of one- and two-region reactors that use thorium and uranium fuels.

MATERIALS REQUIREMENTS

Based upon estimates of the growth of power requirements in the United States during the next 50 years, it appears that in the year 2000 nuclear reactors must provide heat for an industry having an installed capacity of 100,000,000 kw if they are to make a substantial contribution to the energy requirements. This is only slightly larger than the present installed capacity in the United States. Assuming that this industry is based upon aqueous homogeneous reactors, the investment in reactors and power generation equipment could be expected to be near $20,000,000,000, and the following quantities of materials would be required.

	Inventory (tons)	Annual Consumption (tons)
D_2O	25,000 to 50,000	500 to 1,000
Thorium	10,000 to 25,000	200 to 400
or		
Uranium	10,000 to 40,000	8,000 to 12,000

Uranium- and thorium-fueled reactors differ very little in inventory requirements. Calculations indicate that thorium-fueled reactors will breed; so the annual consumption of thorium would be small. Between 1000 and 2000 kg of separated U^{235} would be needed to start an industry based upon thorium breeders at a level of 1000 Mw of electrical capability.

Cross-section data for plutonium show that η for Pu^{239} decreases from 2.0 for reactors operated at 20°C to 1.9 for reactors operated at 250°C. Since the effect of fast fissions in U^{238} is negligible in aqueous homogeneous reactors, the combined lack of "fast effect" and decrease in η_{49} result in poor utilization of the uranium. The fraction of the uranium that can be consumed also depends upon the degree of depletion in the diffusion plants and the values of η for Pu^{241}. Assuming depletion to 0.25% U^{235} and values of 1.9 and 2.4 for η_{41}, the fraction of uranium burned in aqueous homogeneous reactors was found to vary between 0.016 and 0.025.

MATERIALS SUPPLIES

It is estimated that there may be as much as 50,000 to 100,000 tons of uranium available in the United States in carnotite and similar ores containing more than 0.1% U_3O_8. Recovery of this uranium at a rate of 2000 tons/year and at a cost of $20 or less per pound of uranium appears to be practical. There may be more than 1,000,000 tons of uranium present in phosphate and shale deposits containing 0.005 to 0.02% U_3O_8. Recovery of uranium at a rate of several thousand tons per year would require the establishment of enormous mining and processing operations. The cost of the uranium would depend upon the value of fertilizer, oil, and other by-products. Costs between $50 and $100 per pound of uranium have been suggested.

It is inferred that foreign uranium is being made available to the United States in quantities of several thousand tons per year and at a cost of less than $20 per pound. Probably there are several hundred thousand tons recoverable at that price. The total world reserves of uranium largely in the more dilute deposits similar to the shales and phosphates have been estimated at 25,000,000 tons.

It is concluded that there is enough uranium in carnotite ores in the United States to establish the

[redacted]

inventory for a 100,000,000-kw power industry based upon aqueous homogeneous reactors. The time required to establish the inventory should be between 5 and 20 years. To provide fuel for the industry for a period of more than 5 to 10 years would require the import of large quantities of foreign uranium and/or the establishment of a large domestic industry based upon the recovery of uranium from phosphates and shales.

Present estimates indicate a reasonably certain reserve of 6000 tons of thorium in monazite in the United States which is recoverable at a cost of less than $10 per pound of contained thorium. Thorium could be obtained as a by-product of the rare-earths industry at a rate of 100 to 300 tons per year.

India has reserves of monazite estimated to contain more than 100,000 tons of thorium. Reasonably certain reserves of monazite in Brazil, Australia, and South Africa could each about equal the United States reserves.

Since thorium is recovered as a by-product of the rare-earths industry, little is known about sources other than the more concentrated monazites. It has been estimated that there is a world reserve of 3,000,000 tons of thorium recoverable at a cost of less than $100/lb.

Foreign sources would be required to supply most of the inventory for a 100,000,000-kw power industry based upon aqueous homogeneous reactors burning thorium. Known reserves in the United States could provide the fuel for as long as 30 years. It is considered reasonable that more dilute reserves could yield thorium at a rate of 200 tons/year for a considerably longer time. If at any time the fuel supplies were depleted or if breeding was no longer desired to enlarge the industry, operation could be continued at the same level for 20 years or more by using half of the inventory as fuel. Since thorium is completely consumed, the thorium reserves are at least equal to the effective uranium reserves for aqueous homogeneous systems.

Although the D_2O inventory is very large, no great technical difficulty is forseen in establishing the inventory. Plants similar to the Savannah River plants and capable of producing 1000 tons/year could be constructed for $600,000,000 and operated for $50,000,000/year or less. It would be necessary to establish the plants and begin stockpiling the D_2O well in advance of the requirement of the power industry. Because the investment in plant and stockpile will be large and the return on investment delayed for many years, public financing probably will be necessary. The present Savannah River plants may provide much of the needed capacity.

TECHNOLOGY

Although the technology of aqueous homogeneous reactors has been greatly advanced during the past three years, there is only one reactor that could be built today with confidence that successful operation could be achieved at temperatures of interest for producing power. Such a reactor would be constructed of type 347 stainless steel and fueled with a solution of uranyl sulfate in D_2O containing 5 g/liter or less of highly enriched uranium and 25 mole % of excess sulfuric acid. It could be operated at temperatures at least as high as 300°C. The corresponding operating pressure would be between 1600 and 2000 psia. There appear to be safe methods of handling and recombining the hydrogen and oxygen produced in the reactor. Foremost among these methods is that of adding small amounts of copper sulfate to recombine the gases in solution.

Application of this system is limited to special-purpose reactors which burn U^{235} to produce power and to the core of a two-region breeder or converter reactor. The latter is of more interest for central station applications. A typical reactor would consist of a 6-ft-dia core surrounded by a 2-ft-thick blanket containing thorium and D_2O. It would be operated at a total power above 400 Mw. Zirconium, known to be compatible with dilute uranyl sulfate solutions, would be required for the core tank of a breeder. The blanket materials and handling cannot be specified with certainty.

Extending the aqueous homogeneous systems beyond the special-purpose power producer requires development along two paths. Information available now indicates that uranyl sulfate solutions containing the 200 g of uranium per liter or more required in reactors that convert U^{238} into plutonium efficiently can be contained in titanium equipment at temperatures above 250°C. There is some evidence that titanium will contain equally concentrated uranyl fluoride solutions also. The quantities of excess acid required to prevent the hydrolytic precipitation of plutonium are unknown. Development for solution reactors requires establishing conditions which will keep plutonium in

solution and confirming that titanium is a satisfactory container material for the solutions. Following this, effort should be spent upon the design and fabrication of titanium or titanium-lined equipment in an effort to obtain acceptably low costs.

Slurries represent a second very attractive approach. Uranium oxide, uranium phosphate, and thorium oxide slurries have been circulated in stainless steel equipment at 250°C with no evidence of important corrosion. Erosion, sometimes serious, is observed with thorium oxide but none has been found with uranium oxide or phosphate. Methods must be developed for handling the slurries to maintain uniform concentrations and to prevent plugging of lines. Calculations and tests are required to show that lack of concentration stability in the slurry fuel presents no control problems. If thorium is to be considered seriously as a fuel for homogeneous reactors, the problems of handling slurries or fluidized solids must be solved. No thorium solution has been suggested yet which merits much consideration as a fuel for power reactors.

Conceptual designs have been investigated for both one- and two-region reactors constructed of stainless steel and stainless-clad carbon steel. One-region reactors and two-region reactors based upon U-Pu fuels appear to require pressure vessels nearly 15 ft in diameter for service at pressures up to 2000 psia. The two-region U-Th reactor requires only a 10-ft-dia pressure vessel. While there are numerous problems in providing satisfactory equipment for the very demanding service, there is little question of the ultimate feasibility of building both types of reactors. Estimates show no significant difference in cost between one-region and two-region reactor plants having the same total power output.

Some concern has been felt over the economy of producing electricity in plants that use saturated steam at pressures as low as 215 psia. While there is some penalty for operating at low temperatures and pressures, it may not be large. An analysis of the effect of changing steam pressures and temperatures on the cost of an existing plant, exclusive of the boiler and associated equipment, shows an increase from $97/kw at 1000°F and 1465 psia to $116/kw at 478°F and 560 psia and an increase to $122/kw at 215 psia and 388°F. Steam at 215 and 560 psia is produced, respectively, in reactors operated at 250 and 300°C. Corresponding net thermal efficiencies for the plants are 23 and 27%. If the reactors and power plants resemble the conceptions presented here (with all the problems solved), it appears reasonable to build nuclear power plants for less than $200 per net kilowatt of capability.

FUELS PROCESSING

There are two established chemical processes for handling aqueous homogeneous reactor fuels. They are the Purex process for U-Pu fuels and the Thorex process for Th-U fuels. Both involve solvent extraction and require that the fuels be separated from D_2O for economical processing. Encouraging results have been obtained in the efforts to remove fission products from uranyl sulfate solutions by filtration through inorganic adsorbents. This could be done in D_2O solutions. Although the cost of processing fuels by existing methods is not excessive, there is still some incentive for developing rapid methods for processing both solutions and slurries without separating the D_2O.

COST COMPARISONS

At the present stage of development it is impossible to make an accurate estimate of the cost of power from reactor stations. However, it is important that a reasonable effort be made to evaluate the costs as one means of comparing several fuel or reactor systems of equal technological development, to point out areas where substantial improvements are required to produce the cheapest power, and to provide a basis for suggesting whether competitive power can be produced with a particular fuel or reactor system even under the most favorable conditions.

Data presented in Table 1 show a comparison of power costs and the distribution of costs for one-region and two-region reactor stations which generate 1350 Mw of heat and are operated with Th-U and U-Pu fuels at 250 and 300°C. There are no apparent large differences in any of the costs for one-region and two-region reactors using the same fuels. One-region reactors have lower chemical processing costs but higher inventory charges and higher charges for consumption of fissile and fertile materials. The important difference between the Th-U and the U-Pu systems is the feed cost. Feed costs for the U-Pu reactors appear to be 0.1 to 0.7 mill/kwhr higher than for corresponding Th-U

TABLE 1. SUMMARY OF ESTIMATED COSTS OF POWER FROM REACTOR STATIONS PRODUCING 1350 Mw OF HEAT

	FUEL SYSTEM							
	Thorium-Uranium				Uranium-Plutonium			
	Reactor Type							
	One Region		Two Region		One Region		Two Region	
Maximum temperature, °C	250	300	250	300	250	300	250	300
Number of reactors per station	1	1	3	3	1	1	1	1
Net station power, Mw of electricity	316	370	316	370	316	370	316	370
Average specific power, kw/liter of D_2O	9.7	9.7	11	11	9.7	9.7	10	10
Plant investment, $/Mw net capability	186	178	186	178	186	178	186	178
Fixed charges, mills/kwhr	4.0	3.8	4.0	3.8	4.0	3.8	4.0	3.8
Operating and maintenance, mill/kwhr	0.8	0.7	0.8	0.7	0.8	0.7	0.8	0.7
Fuel cost, mills/kwhr								
Asymptotic chemical processing*	0.1	0.1	0.5	0.4	0.1	0.1	0.4	0.3
Fissile and fertile materials								
Consumption	−0.1	0.0	−0.3	−0.2	1.0**	1.1**	0.5**	0.6**
Inventory	0.7	0.6	0.5	0.4	0.3	0.3	0.2	0.2
D_2O inventory and losses	1.0	0.9	0.9	0.8	1.0	0.9	1.0	0.9
Total*	1.7	1.6	1.6	1.4	2.4	2.4	2.1	2.0
Total power cost,* mills/kwhr	6.5	6.2	6.4	5.9	7.2	6.9	6.9	6.5

*Costs neglect a charge on chemical processing plant which depends upon the degree of integration of chemical plant and reactor plant and is inversely proportional to the total power output of the reactor stations associated with the chemical plant. The effect of this charge could increase the costs noted by as much as 0.7 mill/kwhr on reactor stations producing 300 Mw of electricity.

**Assumes η for Pu^{241} is 1.9. Increasing η_{41} to 2.4 results in a 50% reduction in this cost.

reactors, depending upon whether η for Pu^{241} is 2.4 or 1.9. This difference can be expected to increase with rising uranium ore costs.

The costs as presented do not include a fixed cost factor on the chemical processing plants. Its effect on the cost of power varies inversely with the total power of the reactors sharing the plant. Where reactors and processing facilities are combined, the size of that factor should depend upon the degree to which common facilities are shared. Including the fixed cost factor could increase the chemical processing and total power cost by 0.7 mill/kwhr for the plants in Table 1.

Because inventory charges constitute a major part of the fuel costs, the important reductions in power costs can be achieved by reducing the inventory. These reductions can be accomplished by increasing the total power output per reactor (especially favorable for one-region reactors), by increasing the very conservative flow velocities used in the studies presented here, and by advanced design of equipment and equipment arrangements. Reduction of the inventory charges by one-third to one-half may be possible in advanced reactor systems.

Power costs presented in Table 1 are based upon a conservative evaluation of the aqueous systems. Projected costs for power from two-region, power breeder reactors, taking into account foreseeable advances in technology, are presented in Table 2. The advances include use of homogeneous catalysis to eliminate the necessity for external recombiners and to permit operation at 300°C and 1600 psia with a specific power in the core of 200 kw/liter or more. Large reactor stations permit complete integration of reactors and chemical

facilities, realization of the asymptotic processing costs, and some savings in capital costs. Increased power output per reactor and advanced design of the circulating systems make possible significant inventory reductions. Production of power for 4.8 mills/kwhr with a plant factor of 0.8 or for 4.3 mills/kwhr with a plant factor of 0.9 appears to be possible. Although this cost includes a credit of 0.2 mill/kwhr for excess U^{233} produced, almost equal savings in chemical processing and fissionable materials inventory charges could be made by operating the reactor to produce no excess U^{233}.

Although no one fuel or type of reactor shows a marked advantage over all the others, the superior fuel utilization suggests that the thorium breeder reactor is a proper approach to economical power from aqueous homogeneous reactors. At least in the present stages of development the two-region reactor has important advantages. It is possible to build relatively small, more easily constructed two-region reactors having good neutron economy and minimum critical materials requirements; the technology of the core system is well advanced; and solutions to the problems encountered in developing, building, and operating the two-region system can be expected to have general application in the field of production of power with aqueous homogeneous reactors.

TABLE 2. PROJECTED COSTS OF POWER FROM TWO-REGION REACTOR STATIONS

Reactor temperature, °C	300
Reactor power, Mw of heat	900
Net electrical output per reactor, Mw	250
Total station output, Mw	500
Average specific power, kw of heat per liter of D_2O	20
Capital investment in plant, $/net Mw of electrical capability	150
Fixed charges, mills/kwhr	3.2
Operating and maintenance, mills/kwhr	0.6
Fuel cost, mills/kwhr	
Chemical processing	0.4
Fissile and fertile materials	
Consumption	−0.2
Inventory	0.3
D_2O inventory and losses	0.5
Total fuel cost	1.0
Total power cost, mills/kwhr	4.8

INTRODUCTION

The Homogeneous Reactor Project (HRP) was initiated at the Oak Ridge National Laboratory early in 1949 for an investigation of aqueous homogeneous reactors, and the exploitation of their unique advantages for producing fissionable materials and power was the major objective. Originally, a power breeder operating on the thorium-uranium cycle was thought to be the most promising goal. At that time the Atomic Energy Commision was very interested in reactors which would produce weapons-grade plutonium at moderate prices for use in the future expansion of the plutonium-production facilities. The findings which resulted from surveys made during 1950 and 1951 of possible applications under these circumstances have been published (*1, 2*). It was concluded that plutonium production with by-product power would be the most fruitful line of endeavor. This conclusion resulted from estimates that plutonium could be produced in aqueous homogeneous reactors for much less than the prevailing costs.

Construction of the Homogeneous Reactor Experiment (HRE) was completed early in 1952. This small aqueous homogeneous reactor was designed to demonstrate that operation of circulating-solution reactors is feasible at high temperature, pressure, and specific power. Successful operation of the reactor has been achieved, including the generation of electricity – first produced in February of 1953 – by a turbine operating on steam from the reactor system.

Concurrently with construction of the HRE, design, development, and research efforts were expanded so as to obtain information necessary for the construction of larger reactors. This work has led to the conclusion that aqueous homogeneous reactors are feasible as power and fissionable-materials producers. However, certain engineering and materials problems remain to be solved. A recent survey report by members of the Hannah Project at the Argonne National Laboratory (*3*) concludes that aqueous homogeneous reactors offer many advantages as plutonium producers but must be considered as long-range possibilities because of present technological difficulties.

During recent months there has been some indication that reactors now under construction, or being designed for construction, will provide all the plutonium production capacity required by the military establishment. If this should be true, there may be less incentive to develop better, long-range plutonium producers. It appears that the primary goal of the HRP should be a means for the generation of economical power and that the production of fissionable material should be the secondary objective.

This report, which is presented as a sequel to ORNL-1096, has been prepared for use in guiding the program of the HRP. It contains an evaluation of the potentiality of producing power only, as exhibited by aqueous homogeneous systems. In general, the technical considerations are based upon the technology as of September 1953. Where it is evident that improvements will be made, the effects of those improvements are explored. A part of the contents is an analysis of the cost of electricity produced in power plants using aqueous homogeneous reactors as steam generators. Since no large aqueous homogeneous power reactors have ever been built and operated, there is no firm basis for most of the costs. They are accurate to the extent that standard-chemical-plant estimating procedures apply and to the extent that the fully developed equipment, plants, and processes resemble those described here. The cost studies are necessary to provide a common basis for comparison of the several aqueous homogeneous systems and to direct attention to the areas where improvements must be made if economical power is to be achieved.

AVAILABILITY AND COST OF NUCLEAR FUELS

REQUIREMENTS FOR LARGE POWER INDUSTRY

Before large-scale development of nuclear reactors for central-station applications can be justified, there must be some assurance that nuclear fuels will be available in sufficient quantity, and at economically attractive prices, to satisfy the requirements of a large power industry. At present, the installed electrical generating capacity in the United States is 83,000,000 kw (4). The doubling time for the industry has averaged about 15 years since 1900, which suggests the possibility of an increase in the generating capacity to 600,000,000 kw by the year 2000. Similar estimates of the degree of expansion have been suggested by Putman (5), Thompson (6), Starr (7), Lane (8), and others.

If a nuclear fuel is to play a significant role in the field of industrial power, there should be a sufficient quantity of the fuel and other associated critical materials to support a capacity of at least 100,000,000 kw in the year 2000. It must be possible to obtain the necessary operating inventory over a reasonable period of time, here taken to be 50 years. For aqueous homogeneous reactors, this means that there must be adequate supplies of D_2O, uranium, and/or thorium. Figures presented in other sections of this report and in ORNL-1096 indicate that an inventory of 0.04 to 0.1 ton of D_2O will be required in the reactor and associated chemical plants for each megawatt of reactor heat-generation capacity. Assuming a very conservative efficiency of 20% for the *net* conversion of heat into electricity, the D_2O requirement will be 0.20 to 0.5 ton of D_2O per net megawatt of electrical capacity. Annual losses are difficult to predict. Although 5% is used in evaluation studies, 2% should be a liberal loss for a large network of reactors.

Aqueous homogeneous reactors operating on the uranium-plutonium cycle will have specific powers in the range of 10 to 25 Mw of heat per ton of uranium in reactor, chemical, and diffusion plants. This amount is equivalent to an inventory of 0.2 to 0.5 ton of uranium per megawatt of electrical capacity. Systems which include both reactors and diffusion plants should be able to deplete natural uranium to 0.15% U^{235} before it is discarded as a fuel. For nuclear plants operating at an average of 85% of their net capability, the required quantity of natural uranium fuel, if processing losses are neglected, depends on the average conversion ratio as shown in Table 3.

With thorium as the fertile material in breeder reactors, 2 kg of fuel would be consumed for each megawatt-year of electricity produced. The inventory in reactors and chemical plants would range from 0.2 to 0.5 ton of thorium and from 0.2 to 0.5 ton of D_2O per Mw of capacity.

The quantities of critical materials required for a 100,000,000-kw power industry, with thorium or uranium used as fuel and based upon aqueous homogeneous reactors, are summarized in Table 4.

TABLE 3. EFFECT OF CONVERSION RATIO UPON FUEL REQUIREMENT

AVERAGE NET CONVERSION RATIO	FUEL REQUIRED (kg/Mwy of electricity)
≥ 1.0	2.0
0.95	18
0.90	36
0.85	54
0.80	72
0.70	107

NATURAL URANIUM

The total of economically recoverable reserves of uranium and thorium has been a subject of much speculation since it first became evident that nuclear fuel could become an important source of energy. According to the reports of the AEC Division of Raw Materials – which are considered to provide the best information regarding the reserves and production rates of uranium in the United States – the status of domestic uranium supplies can be summarized as follows (11):

1. In 1951 most of the domestic uranium was being recovered from the mining of carnotite ores in the Colorado Plateau.[1] A small amount of uranium was obtained from pitchblende deposits

[1] R. B. Briggs, *Supplement to Report ORNL-1642, Aqueous Homogeneous Reactors for Producing Central-Station Power*, ORNL CF-54-2-8 (to be published).

TABLE 4. MATERIAL REQUIREMENTS FOR 100,000,000-kw POWER INDUSTRY BASED UPON AQUEOUS HOMOGENEOUS REACTORS

MATERIAL	REQUIREMENT PER MEGAWATT OF ELECTRICAL CAPACITY	TOTAL REQUIREMENT
D_2O inventory, tons	0.2 to 0.5	20,000 to 50,000
D_2O makeup, tons/year	0.005 to 0.010	400 to 1,000
Th or U inventory, tons	0.2 to 0.5	20,000 to 50,000
Th requirement,* tons/year	0.002	200
U requirement,* tons/year		
for a conversion ratio $\geq$ 1.00	0.002	200
= 0.95	0.018	1,800
= 0.90	0.036	3,600
= 0.85	0.054	5,400
= 0.80	0.072	7,200
= 0.70	0.107	10,700

*Losses in chemical processing are neglected. Processing losses could equal the fuel consumption in systems in which the conversion ratio is near 1.

and from copper-uranium ores in southern Utah. Ore deposits being worked in 1951 generally contained more than 0.2% U_3O_8.

2. From the rate of discovery, it appears that the rate of production from carnotite ores can be maintained at the 1951 level, and probably at a higher level, for at least the next ten years. Although there are continuing discoveries of copper-uranium ores and small pitchblende deposits and new discoveries of uranium ores in the limestone areas of New Mexico, production from those sources is not expected to approach the production from carnotite. A total of 50,000 to 100,000 tons of uranium in ores containing more than 0.1% U_3O_8 and recoverable at current or moderately increased prices might be a reasonable guess for the reserves in the United States.

3. There are very large deposits of uranium-bearing ores containing 0.005 to 0.02% U_3O_8, the richest being the phosphate beds of Florida. It is estimated that there are several hundred thousand tons of uranium in deposits containing 0.01 to 0.02% U_3O_8. Other estimates indicate the presence of perhaps 1,000,000 tons of uranium in the Chattanooga shales of Tennessee and in Kentucky which contain approximately 0.006% U_3O_8. Small deposits of other shales have been found which contain as much as 0.02% U_3O_8. Certain large deposits of lignites and coals in the Dakotas, Wyoming, and Nevada contain 0.003% U_3O_8.

The situation with regard to world uranium reserves is less well known. Most of the uranium obtained for the atomic energy program in the past has come from the very rich deposits of the Belgian Congo, while the Great Bear Lake district of Canada provided a secondary source. More recently, important amounts of uranium have been obtained from gold residues in South Africa. It is understood that large, rich deposits recently have been found in Australia. In 1942, production was nearly 700 tons in Canada and 700 tons in the Belgian Congo, as compared with about 200 tons in the United States (*10*). Recent production rates are not published, but our continuing dependence upon foreign supplies leads to the conclusion that the total annual imports to the United States must be greater than 2000 tons. The total foreign reserves of uranium in ores containing more than 0.1% U_3O_8 could be expected to amount to several hundred thousand tons.

Reserves of ores comparable in quality with the phosphate and shale deposits in the United States have received rather little attention. Uranium occurs in the oil-bearing shales of Sweden with concentrations near 0.02% U_3O_8, ranging to as much as 0.5% concentration in some areas. Putnam indicated in his lectures that the AEC had released information indicating the existence of a world

reserve of 25,000,000 tons of uranium, largely in the low-concentration ores.

A uranium cost of approximately $20 per pound of uranium is used in this report. Use of this cost appears reasonable if uranium continues to be available from foreign sources, if the total requirements do not exceed several thousand tons per year, and if the total inventory is the 50,000 tons indicated in Table 3. If complete dependence were placed upon domestic sources, the price of uranium could be expected to increase. Estimates of the cost of recovering uranium from ore are available from many sources (*2, 5, 10, 11, 12, 13*). The cost of uranium from the shales and phosphates depends upon the value of the by-products (fertilizer, oil, etc.) obtained with the uranium and is subject to large differences of opinion. It probably would not exceed $100 per pound and might be less than $50 per pound of uranium.

ENRICHED URANIUM

Most of the aqueous homogeneous reactors which have been studied require enriched uranium to operate most economically. Uranium-fueled reactors need only a slightly enriched fuel. Thorium breeder cycles must be initiated either with U^{233} (produced, say, with excess neutrons from plutonium production reactors) or with highly enriched U^{235}.

Within the next few years there will be about $3,000,000,000 worth of diffusion-plant capacity in this country. This sum is from 10 to 20% of the total investment in a 100,000,000-kw generating system. As far as large-scale use of aqueous homogeneous reactors is concerned, one of the primary functions of the large diffusion-plant system could be to re-enrich depleted reactor fuels in order to make the most efficient use of the uranium supplies. It is reasonable to assume that the diffusion plants will be available to process fuels for the power industry if their use is shown to be economical, for the power reactors will either be dual-purpose systems which will fit into the existing framework of operation, or the military need for uranium and diffusion plants will decrease to the extent that both are available to the power industry.

The case for starting the thorium breeder cycles is not quite so clear. Calculations indicate that each reactor started with U^{235} will require from 1 to 2 kg of U^{235} for each megawatt of electrical capacity. A capacity of 1,000,000 kw might be started in this way before there is sufficient U^{233} production capacity from breeding to establish the remainder of a large power industry. Thus, from 1000 to 2000 kg of separated U^{235} would be needed. This amount is within the total requirements considered for a fleet of several nuclear-powered submarines or aircraft and is equivalent to the amount of top product obtained in processing less than 500 tons of uranium feed in the diffusion plants. Whether the material can be made available for power depends upon the military requirements and upon whether economical power can be produced by breeding if a large investment of expensive U^{235} is required to start the cycle.

The value of the enriched uranium may be determined as the sum of two diffusion-plant costs: the cost of natural uranium feed material and the cost of separative work. The amount of separative work is defined for an ideal process in terms of the value function, $V(N)$. Postulating that $V(N)$ is independent of concentration and imposing the boundary conditions that both $V(N)$ and $dV(N)/dN$ are zero when N (concentration of U^{235} in uranium)[2] equals 0.50, the value function is given by

$$V(N) = (2N - 1) \ln \left(\frac{N}{1 - N} \right) .$$

The amount of separative work, S, is then defined as the net difference in value between the feed and exit streams of the diffusion plant:

$$S = PV(N_p) + WV(N_W) - FV(N_F) ,$$

where P, N_p, W, N_W, F, and N_F refer respectively to the flows and concentrations of the product, waste, and feed streams.

If C_S is the cost of separative work and C_F is the cost of natural uranium, the total cost of enriched uranium is

$$C_T = C_S S + C_F F ,$$

or

$$C_T = \frac{C_S}{N_P} \left[V(N_P) + \left(\frac{N_P - N_F}{N_F - N_W} \right) V(N_W) - \left(\frac{N_P - N_W}{N_F - N_W} \right) V(N_F) \right] + \frac{C_F}{N_P} \left[\frac{N_P - N_W}{N_F - N_W} \right] .$$

[2]For explanation of symbols, see "Nomenclature," this report.

For given feed and enrichment costs, the optimum waste concentration is found by differentiating the foregoing equation with respect to N_W and setting the resultant expression equal to zero. The resulting equation relates the ratio of the costs to the waste and feed concentrations:

$$-\frac{C_F}{C_S} = (2N_F - 1) \ln \left(\frac{N_W}{1 - N_W} \right) + \frac{(N_F - N_W)(2N_W - 1)}{N_W(1 - N_W)} - V(N_F) .$$

The basic costs for calculating the cost of uranium as a function of enrichment and a table and a figure which contain the results of the calculation are contained in a separate report.[1]

THORIUM

Thorium is widely distributed in nature in relatively small proportions. Monazite (a rare-earth phosphate), thorite ($ThSiO_4$), and thorianite (Th and U oxides) are the principal thorium-containing minerals. Generally, the concentration of thorium is very low; however, the natural processes of erosion have concentrated monazite into relatively large, easily worked deposits in beach sands and river beds. Although thorium is not a primary element in monazite, large deposits are common in which ThO_2 is 2 to 10% of the monazite content. There are small deposits of rich sands that contain as much as 10 to 50% monazite. Average good grades contain 0.5% and poor grades contain 0.05% monazite, but mining by dredging and concentration by hydraulic and magnetic classification permit economical recovery of even the poor grades under present conditions of supply and demand. Although monazite was first mined to obtain thorium for use in gas mantles, it is now in demand for the rare earths, and thorium is produced as a by-product. Because monazite supplies are large and the thorium demand is small, there has been little incentive to find and develop other sources of thorium.

The status of world monazite production and resources in 1949 has been summarized by the Atomic Energy Commission (14, 15). Major known deposits of monazite-containing sands occur in India on the beaches of Travancore and in Brazil. Much less extensive deposits have been found in Ceylon, Netherlands, East Indies, Australia, Malay States, Africa, Russia, and the United States. The total world production of monazite from 1893 to 1948 was 153,000 tons containing 9800 tons of ThO_2, divided as follows: India, 54%; Brazil, 38%; United States, 3.6%; others, 4.4%. The largest total production during a single year – 7392 tons of monazite containing 365 tons of ThO_2 – occurred in 1909. Of this total, Brazil produced 7121 tons. In 1938, 6639 tons (5850 tons mined by India) of monazite containing 545 tons of ThO_2 was mined.

Monazite reserves in India have been estimated by Indian geologists to be as great as 2,000,000 tons. American and English estimates range between 160,000 tons of reasonably certain reserves to 1,300,000 tons of possible reserves containing about 8% ThO_2. Other reserves in Asia and the African and Australian reserves in known producing areas have been estimated with some assurance to contain a total of 140,000 tons of monazite averaging 5% ThO_2. United States reserves were estimated in 1949 to be 50,000 tons of monazite containing 4% ThO_2.

An embargo was imposed by India in 1947 on the export of monazite and more recently Brazil imposed a similar embargo. Thus, the United States has been dependent for the past several years on domestic sources to provide raw material for the rare-earth industry. It is understood that large imports can now be obtained from South Africa. The status of production and reserves in the United States was reviewed by Battelle Memorial Institute (*16*) in 1951. At that time domestic production was estimated to be 2100 tons of monazite per year. Most of the production was obtained from placer deposits in Idaho, with some additional production coming from ilmenite mining in Florida. The reasonably certain reserves in Idaho, Wyoming, the Carolinas, Florida, and California appeared to be large enough to support an annual production of 10,000 tons of monazite for a decade or more. Recent AEC estimates indicate a United States reserve of 150,000 tons of monazite containing 6000 tons of ThO_2.

In view of the increase in estimated reserves of monazite in the United States resulting from a short period of intensive exploration, it appears reasonable that similar increases in world reserves would result from explorations prompted by an increased demand for thorium. An unusual vein deposit of monazite has been found in South

Africa, but no important deposits of thorium-containing minerals other than monazite have been reported. Although explorations may reveal such deposits, opinions based on geological studies suggest that monazite may be the only economical source of thorium.

Because thorium is produced now as a by-product, the cost bears little relation to the cost of monazite. Since the mineral is usually obtained with gold, zircon, ilmenite, garnet, and other minerals, its cost is sensitive to the value of other minerals in the deposit. In 1940, Indian monazite sands containing 8% ThO_2 were priced at $80 per ton f.o.b. New York. Tentative prices in 1949 for Brazilian monazite containing 5% ThO_2 were $135 to $175 per ton f.o.b. New York. The 1951 price for domestic monazite containing 4% ThO_2 was $300 per ton. It was believed that this price would have to be maintained in order to support production and that it might have to be increased to as much as $400 per ton to permit mining of the poorer deposits.

As recently as 1951, the price of crude thorium nitrate tetrahydrate was $1.50 per pound ($3.60 per pound of contained thorium), based largely on the cost of recovery from monazite. It appears that the demands of the rare-earth industry might become great enough to support a production rate of as much as 350 tons of thorium per year on this same basis if there is no competition from other rare-earth minerals. Competition is expected from large deposits of bastnasite, a rare-earth mineral containing essentially no thorium, discovered in California and New Mexico. The cost of mining and concentrating bastnasite has been estimated to be as low as $125 to $150 per equivalent ton of monazite; so $150 to $250 per ton of the monazite cost may have to be charged against the thorium content. For monazite with a thorium content of 3.5%, this charge is from $2.50 to $4.00 per pound of thorium. Processing costs to obtain thorium nitrate from monazite have been estimated at $5.19 per pound of thorium in a 5-ton-per-month plant and $3.17 in a 25-ton-per-month plant (*17*).

The United States now has a stockpile of thorium compounds purchased at a price of nearly $3.60 per pound of contained thorium.[1] Domestic sources appear capable of supplying at least another 6000 tons of thorium at an annual rate of 100 to 300 tons and at a cost less than $10 per pound. From 25,000 to 100,000 tons of thorium – and possibly much more – may be obtainable from foreign sources. The *production* cost for these quantities should be considerably less than $10 per pound; there is no available information to indicate the amounts potentially available at a higher cost.

The price of thorium will depend on the value for its use in power production or for unforeseen uses such as new military demands or alloying with other metals. A value of $10 per pound of thorium as purified oxide has been used for this report. Foreign supplies would have to be obtained to satisfy the inventory requirements of a 100,000,000-kw power industry.

HEAVY WATER

The hydrogen content of natural waters includes deuterium to the extent of 1 part in 6000, about 20% of which is removed in one pass through existing separations plants. Processing of 7.5 $\times 10^8$ tons of water would be required to provide the 25,000 tons minimum inventory of D_2O in the power system. This amounts to two tenths of a cubic mile of water.

The status of the heavy-water processes has been discussed by Thayer (*18*). Separation in the Savannah River plants utilizes the H_2O-H_2S dual-temperature process followed by distillation and electrolysis. Capital costs for such plants are $600,000 per annual ton of production capacity. Annual operating costs are estimated to be $50,000 per ton of heavy water of 98+% isotopic purity. Other processes (H_2-H_2O dual-temperature exchange, H_2 distillation, etc.) may present possibilities for lower cost, but the current knowledge of them offers little basis for predicting the costs.

While total costs and production for the Savannah River plants are published only in Top Secret literature, the capacity is presumably large. If existing plants do not have sufficient capacity for the establishment of a large power industry, a 500-ton-per-year plant could be added for $300,000,000 or less.

The cost of heavy water to the power industry will be a sensitive function of the fixed charges assessed against existing production plants and of any reductions in investment and operating costs that might be realized in new separation plants. There seems to be little probability that the unit cost can be reduced to the $25 per pound operating cost estimated for the Savannah River operations. A cost of $40 per pound (*11*) will be used here. This permits a 5% charge on the present government investment, or a more normal charge on future plants if important savings in operating and capital costs are realized.

TECHNOLOGY OF AQUEOUS HOMOGENEOUS POWER REACTORS

GENERAL CHARACTERISTICS OF THE REACTOR SYSTEMS

Aqueous homogeneous reactors for producing fissionable materials and power have been conceived as having a wide variety of shapes, sizes, and methods of distribution of fissile and fertile materials in an aqueous moderator. Fluid fuels considered include solutions, slurries, or small fluidized pellets (a limiting case) in H_2O or D_2O. One-region reactors contain a homogeneous mixture of fissile and fertile materials and moderator. Generally, they are large in order to minimize neutron losses while containing the fuel in concentrations of 100 to 300 g of uranium or thorium per liter of solution or slurry. Two-region reactors are characterized by a core containing fissile material in a moderator, surrounded by a blanket of fertile material in a (not necessarily the same) moderator. They may be comparatively small with dilute fuel, 1 to 5 g of uranium per liter in the core, and a concentrated (500 to 5000 g/liter) blanket, since the loss of neutrons from the system depends upon the thickness and concentration of the blanket. Heat can be removed either by circulating the fuel and moderator – or the moderator only in the case of a pelleted fuel – through heat exchangers or by permitting the contents of the reactor to boil.

A major problem in developing a feasible aqueous homogeneous power producer is the selection of fuel and a compatible material of construction. Operating temperature and power may be limited by the chemical characteristics of the fissile and fertile materials – plutonium in uranium or uranium in thorium fuel systems.

FUEL SYSTEMS

Uranyl Sulfate Solutions

Numerous experiments performed over the past few years have firmly established the thermal and radiation stability of uranyl sulfate solutions over a wide range of temperatures and concentrations. The phase diagram (*19*) determined for the system in quartz tubes is shown in Fig. 1. As shown in Fig. 2, the addition of excess acid increases the temperature at which the solution separates into two liquid phases. Just as substitution of D_2O for H_2O lowers the two-liquid phase temperature a few degrees, so probably will some types of impurities. Uranyl sulfate has exhibited no instability in the presence of reactor radiation. The observed precipitation of uranyl peroxide at low temperatures results from a reaction with the decomposition products of water. At high temperatures the thermal decomposition of hydrogen peroxide is so rapid that no peroxide precipitation has been observed.

Fissioning in uranyl sulfate solutions produces important quantities of hydrogen and oxygen. Values for G_{H_2} (molecules of hydrogen produced per 100 electron volts of energy absorbed by the solution) vary from 1.7 for very dilute solutions to 0.8 for solutions containing 400 g of uranium per liter (*19*).

Corrosion of metals and of some nonmetals by uranyl sulfate solutions has been studied over a range of conditions in the absence of radiation. Whether a particular material is acceptably resistant to corrosion depends on the temperature,

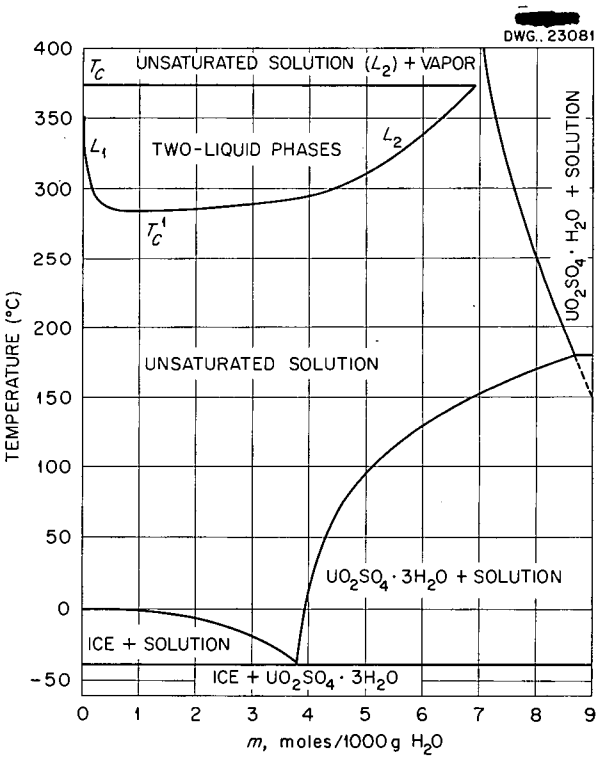

Fig. 1. Phase Diagram for the System UO_2SO_4-H_2O.

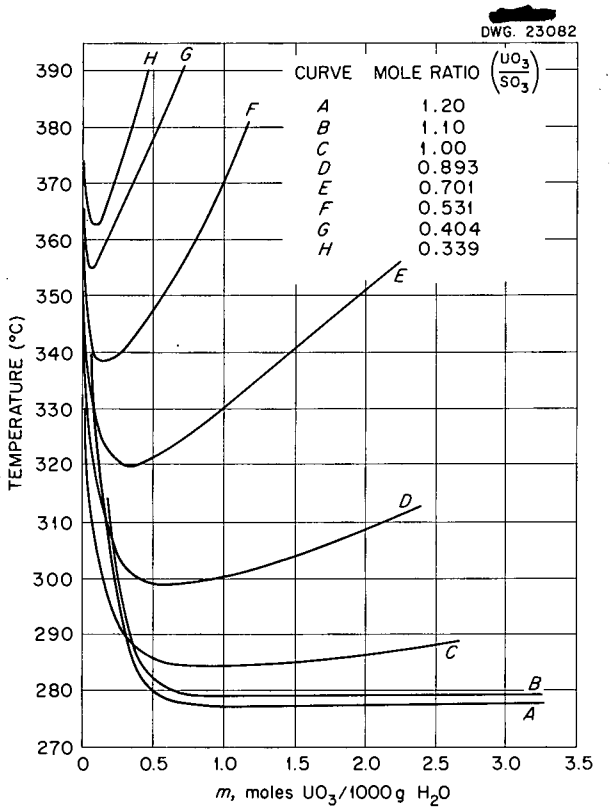

Fig. 2. Two-Liquid Phase Region in the System UO_3-SO_3-H_2O.

the solution velocity or local turbulence conditions, the uranyl sulfate concentration, and the concentrations of additives. A corrosion rate of less than 1 mil per year (mpy) with no localized or intergranular attack is considered as acceptable.

When uranyl sulfate solutions hydrolyze, they become quite acidic. At high temperature some excess acid is required to prevent hydrolytic precipitation of uranium from dilute solutions. Corrosion of metals by the solutions results in reduction of the uranyl ion, precipitation of the uranium as UO_2, and formation of free sulfuric acid unless an oxidizing agent is added to maintain the oxidation state of the uranium. Dissolved oxygen has proved to be an effective oxidant.

At temperatures below 100°C there are many materials satisfactory for use with uranyl sulfate solutions in all concentrations. Included among the metals are the austenitic stainless steels represented by types 347, 316, and 321 in the as-welded condition and type 304 when properly heat treated after welding; the precious metals, gold and platinum; Inconel, tantalum, titanium, zirconium, and the Stellites. Graphite or Graphitar (used in conjunction with Stellite in bearings), Teflon, titania, alumina, zirconia, quartz, and pyrex are among the satisfactory nonmetals. Contact with air provides sufficient oxygen to prevent reduction of the uranyl ion. There is no hydrolytic precipitation even in dilute solutions.

The number of acceptable materials and the range of permissible conditions decrease rapidly as the temperature is increased. At 250°C the austenitic stainless steels appear to be satisfactory for general application when the uranium concentration is 5 g of uranium per liter or less and the UO_3-to-SO_4 ratio is 0.5 or greater. Minor, local turbulence effects have been observed in pump impellers but none occur in elbows, tees, and other fittings at fluid velocities up to 20 fps. There appears to be no velocity effect on small pin or plate corrosion specimens at velocities below 77 fps, the highest velocity used in the tests.

Velocity effects become noticeable with solutions containing 10 g of uranium per liter and 15 mole % of excess acid (UO_3/SO_4 = 0.87) and with those containing 15 g of uranium per liter and no excess acid. Under these conditions, stainless steel may no longer be acceptable for pump parts where the velocity is very high but still may be used for piping and vessels where the velocity is kept below 30 fps. With a concentration of 40 g of uranium per liter, stainless steel pumps in the test loops corrode very badly, and local areas of severe corrosion are found just beyond elbows, tees, and flow restrictors when the velocity is above 30 fps. In properly designed systems, stainless steel still appears to be acceptable at velocities below 20 fps. For concentrations in the range of 100 to 300 g/liter, stainless steels may be satisfactory only for long, straight runs of pipe where the velocity is 10 fps or less.

Titanium has shown good resistance to corrosion by uranyl sulfate solutions under all test conditions at 250°C. Essentially no corrosion has been observed on titanium corrosion specimens or pump impellers in solutions containing as much as 300 g of uranium per liter. Gold and platinum are also uncorroded and are useful for special

applications. Good quality zirconium and the Zircaloys appear to be as corrosion resistant as titanium.

The quantity of dissolved oxygen required to stabilize the uranyl ion has not been established. Although a majority of the tests have been made with 1000 to 2000 ppm of dissolved gas, it is possible that 50 ppm or less may be sufficient. There is some indication that the corrosion – particularly that resulting from velocity effects – may be slightly less severe with the lower oxygen concentration. There is no conclusive evidence that the addition of fission products or of copper sulfate (proposed as a homogeneous catalyst for recombining D_2 and O_2) to uranyl sulfate solutions affects the corrosion. The corrosion effect of the excess sulfuric acid which must be added to prevent the hydrolytic precipitation of copper does limit the amount of copper which can be used as a catalyst.

Quartz and the synthetic gems – spinel, titania, and zirconia – are only mildly affected by uranyl sulfate solutions at 250°C. Teflon has been used for valve packing and for preventing contact between dissimilar metals.

A relatively small amount of corrosion information has been obtained at temperatures above 250°C. There is some evidence that the oxide film which is formed on stainless steel at temperatures above 225°C is far more protective than that formed at lower temperatures. Whether the protective film forms depends upon the local turbulence (measured in terms of velocity past the specimens in corrosion tests), the uranyl sulfate concentration, and the concentration of excess sulfuric acid. The tests which have been made only recently show that the corrosion rates in solutions containing 5 g of uranium per liter with 25 mole % excess sulfuric acid and 40 g of uranium per liter with no excess acid remain about the same at temperatures between 250 and 300°C. That the film is more protective at 300°C is indicated by the fact that permissible velocities in systems containing 40 g of uranium per liter appear to be near 30 fps at 300°C, as compared with 20 fps at 250°C.

As the uranium concentration is increased, the maximum operating temperature in stainless steel is limited to less than 300°C by separation of the solution into two phases. The uranium-rich phase is extremely corrosive. Although the phase separation temperature could be raised by the addition of acid, the resulting solutions would corrode stainless steel at prohibitive rates.

Titanium and zirconium were uncorroded by uranyl sulfate solutions containing 5 and 40 g of uranium per liter at 300°C in the few tests which have been made. There is a small amount of evidence that titanium resists corrosion at 350°C by the uranium-containing phase that separates from solutions containing 300 g of uranium per liter.

The effect of radiation upon corrosion is determined only with difficulty. Certain small-scale tests which have been run indicate that the corrosion of stainless steel at 250°C may increase with increasing fission density in the solution. Definitive experiments are in progress.

No information is available concerning the effect of radiation upon the corrosion of the other metals. In the case of the nonmetals, radiation-induced changes in physical properties rather than corrosion resistance are expected to limit the applications.

Uranyl Fluoride Solutions

The small thermal-neutron-absorption cross section of fluorine [$\sigma_a(F_2) = 0.02$ barn vs $\sigma_a(SO_4) = 0.49$ barn] leads to interest in uranyl fluoride as a substitute for uranyl sulfate. This consideration is much more important in reactors fueled with natural or slightly enriched uranium [wherein the sulfur competes for neutrons with U^{238}, $\sigma_a(28) = 2.77$ barns] than in highly enriched systems in which the competition is with U^{235} [$\sigma_a(25) = 680$ barns] or U^{233} [$\sigma_a(23) = 592$ barns].

The phase diagram for the UO_2F_2-H_2O system (19) presented in Fig. 3 shows that the two-liquid-phase region is above 300°C for all concentrations of interest. As with uranyl sulfate, the hydrolysis of uranyl fluoride yields an acid solution which, in this case, requires excess HF to prevent hydrolytic precipitation of dilute solutions at high temperatures. Some HF is present in the vapor phase above uranyl fluoride solutions, but the concentrations have not been measured. To prevent reduction of the uranyl ion and precipitation of UO_2, oxygen must be dissolved in fluoride solutions which are in contact with most metals at high temperature.

Uranyl fluoride has received only secondary consideration as a fuel because of the early fear

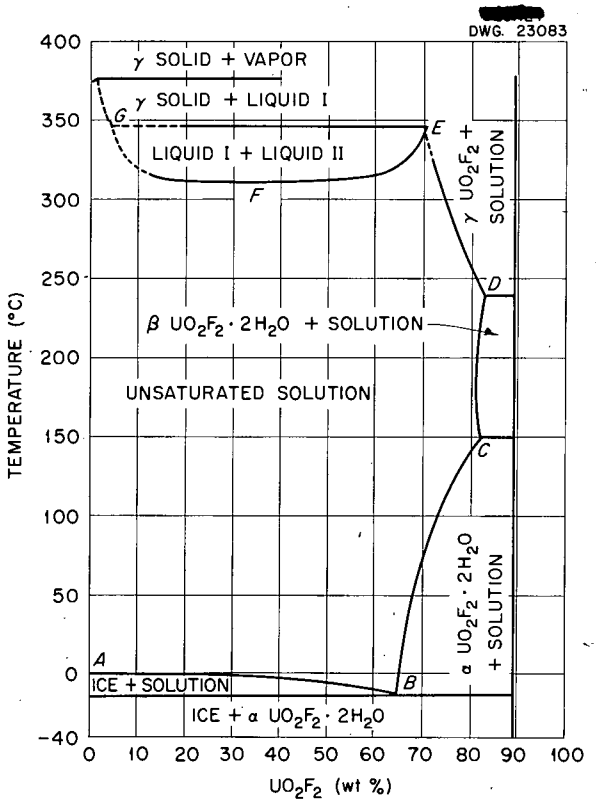

Fig. 3. Phase Diagram for the System UO_2F_2-H_2O.

that both the solution and the vapor phase would be very corrosive at temperatures of interest for power production. In the few tests which have been run, corrosion of stainless steel and of titanium in uranyl fluoride solutions has been no more severe than corrosion in sulfate solutions with the same uranium concentration. The austenitic stainless steels are satisfactory materials of construction for systems containing 5 g of uranium per liter or less at 250°C. Titanium specimens in stainless steel systems have shown no attack in solutions at concentrations as high as 300 g of uranium per liter (the highest concentration tested) at 250°C. However, zirconium and its alloys are incompatible with even dilute uranyl fluoride solutions at high temperatures. The similarity of titanium and zirconium chemistry suggests that titanium might prove to be unsatisfactory in long-term tests. Gold and platinum have been found to have satisfactory corrosion resistance in uranyl fluoride solutions of all concentrations at high temperature.

No radiation instability of the uranyl fluoride has been observed in reactor tests, although hydrogen peroxide does cause precipitates to form at high radiation levels and low temperatures. The G_{H_2} values observed are about the same as those for uranyl sulfate.

Uranium Trioxide Slurries

Slurries of uranium oxides in heavy water are often mentioned as possible nuclear fuels. The neutron cross section of oxygen is less than 0.0002 barn per atom, and the corrosion resulting from slurries should be about that caused by water. Disadvantages attributed to the slurry systems include greater difficulty of chemical processing by simple, continuous methods, the possibility of erosion, and the difficulty in maintaining the homogeneity of the system.

During the past two years pertinent physical, chemical, and engineering data have been developed concerning the uranium oxide slurries. Uranium trioxide monohydrate, $UO_3 \cdot H_2O$, has been found to be the stable oxide at temperatures as high as 325°C in water containing either oxygen or hydrogen and oxygen. Two crystal forms have been observed with the pure oxide in pure water. At temperatures less than 200°C, rods 1 to 5 μ in diameter and 10 to 30 μ long are the stable form. For systems above 200°C, platelets which are normally 6 to 50 μ along each edge and about 1 μ thick are stable. At temperatures less than 200°C, micronized platelets are converted to rods, while micronized rods become platelets above 200°C.

Uranium trioxide slurries in concentrations as great as 250 g of uranium per liter have been circulated through stainless steel piping by stainless steel pumps at temperatures from 100 to 250°C. The velocity in the piping was normally 20 fps or less; in the pump and in the flow restrictors, there were local velocities in excess of 50 fps. Slurry has been circulated through a Stellite bearing in a canned motor pump at 100°C. There has been no evidence of important corrosion or erosion in any of these systems. This is considered reasonable because the hardness of the slurry particle on the Moh scale is about 3.5 compared with 6 to 6.5 for annealed stainless steel. Rods are abraded into spherical or ellipsoidal shapes, with about 5 μ as the largest dimension. Platelets are abraded and the corners

rounded to give particles 1 μ thick with 1 to 5 μ sides.

Uranium trioxide slurries will settle at a rate near 1 mm/sec unless agitated continuously. They are easy to suspend after long settling periods at 250°C. No difficulty has been experienced in maintaining uniform suspensions in circulating systems at 150°C. Above 200°C, a pure oxide slurry appears to coat the wall and to concentrate in some parts of a circulating system. This is believed to be associated with the change in crystal structure. Some success has been achieved in keeping the uranium oxide suspended at 250°C in a mixed slurry containing 5 parts of uranium trioxide and 1 part of uranyl phosphate. Pumping and heat transfer characteristics of the uniform suspensions are similar to those of solutions and can be estimated upon the basis of physical property data (*20*).

Very little is known about the effect of radiation upon the slurries. The major effect seems to be fragmentation of the crystals which results in smaller particles. Since a part of the energy of the fission fragments is dissipated in the crystals, there is less decomposition of the moderator, but there are no reliable values for G_{H_2}.

Other Uranium Fuels

Other uranium compounds (*19*, *20*) which merit consideration as possible fuels for aqueous homogeneous reactors include uranyl nitrate, uranyl phosphate, slurries or solutions in phosphoric acid, uranyl carbonate slurries, and complex carbonate solutions. Generally, these fuels are viewed with less favor because of known or suspected stability problems, corrosion problems, and inferior nuclear properties.

Uranyl nitrate solutions have been found to be stable against hydrolytic precipitation above 250°C over periods of several hundred hours in quartz tubes. Precipitation begins in solutions containing 10 g of uranium per liter near 265°C, but the precipitation temperature can be raised by the addition of acid. The precipitation temperature is greater than 300°C in solutions containing 250 g of uranium per liter or more. Evidence of thermal decomposition is demonstrated by the presence of nitrogen oxides in the vapor space above the more concentrated solutions at elevated temperatures. The reaction is known to be reversible, but measurements have not been made of the resulting gas pressures. Nitrogen gas is produced when uranyl nitrate solutions fission, but the production rates (G_{N_2} values) have not been measured. The few corrosion tests which have been run at 250°C indicate that stainless steel is corroded as rapidly by uranyl nitrate solutions containing 40 g of uranium per liter as it is by equally concentrated uranyl sulfate solutions. Separated N^{15} (σ_a = 0.00008 barn) would be required to obtain satisfactory neutron economy in natural or slightly enriched uranium systems.

Uranium trioxide is soluble to the extent of 100 to 300 g of uranium per liter in phosphoric acid solutions containing PO_4-to-U mole ratios of 4 to 10. The solutions are stable thermally (*54*) above 450°C. The neutron economy is poor, and finding a practical container material appears to be a major problem. Platinum and gold are the only materials which have proved to have good corrosion resistance.

Uranyl phosphate slurries have been circulated successfully in stainless steel equipment at 250°C. Although the neutron economy is less attractive than with oxide slurries and the chemical processing problems may be more difficult, work now in progress may show that uranyl phosphate slurries are more satisfactory than the oxide slurries for high-temperature applications.

High solubility of uranium in an alkaline solution, generally considered desirable from the corrosion viewpoint, can be achieved in the UO_2CO_3-Na_2CO_3-H_2O system. However, the carbonate complex decomposes at elevated temperatures and there is evidence that very high CO_2 pressures would have to be maintained in a high-temperature system to retain the uranium in solution. The decomposition of uranyl carbonate slurry to form the oxide at elevated temperatures is not suppressed by an excess pressure of 500 to 600 psi of CO_2 at 250°C.

Plutonium Fuels

Plutonium compounds (*19*) which can be used as fuels in aqueous homogeneous reactors have received very little attention. The problem in plutonium production systems has been to remove the Pu^{239} from the reactor quickly to minimize the production of Pu^{240}. The problem in power producers may be to find a compatible uranium-plutonium-metal container system so that the plutonium can be burned in the reactor.

The limited amount of work which has been done shows little promise that a plutonium solubility of 1 g/liter or greater, which is required for power reactors, can be achieved in uranyl sulfate or uranyl fluoride solutions without a considerable excess of acid being added. There is evidence that Pu(IV) is the stable oxidation state in irradiated solutions and that hydrolytic precipitation of PuO_2 occurs rapidly at temperatures above 150°C. Although the presence of oxygen in solution tends to prevent this precipitation, oxygen has not been completely effective in stainless steel systems in the absence of radiation. Some "best guesses" of the quantity of acid required to retain plutonium in solution are that the pH should be reduced to 1 or less. Stainless steel would not be an acceptable container material at high temperatures, but both titanium and zirconium might contain the sulfate, and titanium could prove to be acceptably resistant to corrosion in the fluoride system.

Plutonium nitrate, chloride, and phosphate are other plutonium compounds which appear to be possible fuels with or without uranium in solutions. The solubility of the chloride and nitrate is high at room temperature with plutonium in the (IV) or (VI) oxidation state. The usefulness of the chloride is limited both by the difficulty of containing chlorides at high temperature and by the high neutron cross section of even the low-cross-section chlorine isotope, Cl^{37} (σ_a = 0.6 barn). Good neutron economy could be achieved with N^{15} in the nitrate system. Little is known about the solubility of the phosphate in the phosphoric acid system but it may be sufficiently high to be interesting. Difficult corrosion problems can be expected in both the nitrate and phosphate systems.

A mixed plutonium-uranium oxide or phosphate slurry might be expected to exhibit properties similar to the uranium slurries. Corrosion problems would be minimized at the expense of some increase in handling problems. Plutonium oxide or possibly phosphate slurries could prove to be useful in the core of a two-region reactor if the problems of handling and maintaining the suspension can be solved.

Thorium Solutions

There are three inorganic thorium compounds – the chloride, the nitrate, and the phosphate – which are sufficiently soluble in aqueous media to be considered as core or blanket solutions for aqueous homogeneous reactors. The chloride can be discarded upon the basis of expected corrosion difficulties and poor neutron economy. Phosphoric acid solutions have been prepared containing 1000 g of thorium per liter at 250°C and a ratio of 5 moles of phosphate to 1 mole of thorium. Again the container problem appears to be difficult, and the neutron cross section of the phosphate amounts to one-seventh of that of the thorium. Good neutron economy can be achieved in the thorium nitrate system with N^{15}. Upon the basis of neutron economy alone, thorium nitrate appears to be the most promising of the inorganic salts. Organic complexes are generally thought to be less promising because of their susceptibility to radiation damage.

Solubility and decomposition temperature data for the thorium nitrate–water system (*19*) are presented in Fig. 4. A precipitate, presumably ThO_2, forms at temperatures between 180 and 230°C in solutions containing 100 to 700 g of thorium per liter. Addition of excess nitric acid increases the decomposition temperature. At temperatures above 120 to 130°C, oxides of nitrogen appear in the vapor phase over the solution. It is expected that some nitrogen gas will be formed in an operating reactor. No corrosion data for elevated temperatures are available; however, the corrosion of stainless steel may be similar to that observed in the tests with uranyl nitrate solutions.

Thorium Slurries

Thorium oxide and thorium fluoride have been advanced as possible materials for slurrying in D_2O. Thorium oxide slurries in H_2O have been studied at concentrations from 100 to 1000 g of thorium per liter. Slurries with particles less than 0.1 μ in size are usually thixotropic. Slight thixotropy is observed in slurries with particles of 0.1 to 0.5 μ in size, and the slurries are easily dispersed after standing at room temperature for one month. Slurries of larger particles settle rapidly and require considerable agitation to redisperse after standing.

Recently some encouraging experience has been obtained in pumping ThO_2 slurries. A slurry containing 200 g of thorium per liter was circulated for 250 hr at 250°C without incident by a Westing-

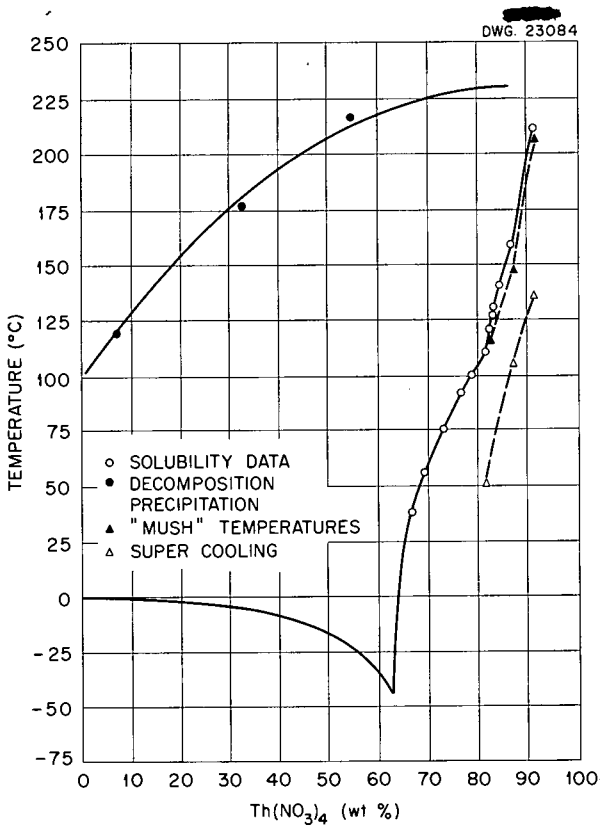

Fig. 4. Solubility and Decomposition Data for the System $Th(NO_3)_4$-H_2O.

house, model 100A, sealed motor pump in a stainless steel loop. The rotor can of the pump was purged continuously with condensate to prevent the ThO_2 from contacting the rotor can and the pump bearings. Although the ThO_2 is known to be harder than stainless steel – the Moh hardness of ThO_2 is 7.5 – no abrasion was observed in the piping where the velocity was 20 fps. The pump impeller was polished and suffered some weight loss; there was some abrasion of an orifice plate where the velocity was 70 fps. In a subsequent test a slurry containing 1000 g of thorium per liter was circulated for 240 hr at lower velocity with no evidence of serious erosion of the piping but with moderate erosion of the pump impeller.

Early difficulties encountered in pumping slurries led to the suggested use of fluidized beds of pellets, cooled by recirculated D_2O, as an alternate to the circulated slurry. In this connection, ThO_2 spheres have been manufactured in sizes from $\frac{1}{8}$ to $\frac{1}{2}$ in. in diameter. They have proved to be resistant to attack by water and dilute uranyl sulfate solutions at 250°C. No significant information has been developed concerning the long-time integrity of the pellets in a fluidized system or the effect of radiation damage upon their mechanical characteristics.

Thorium fluoride may offer some advantages over the oxide in processing of the solid for removal of U^{233}. Although very little has been done with the fluoride slurries, they appear to be slightly less abrasive than the oxide in laboratory tests. Fluoride slurries are so bulky that the maximum attainable thorium concentrations may be 500 g/liter.

Fuels for Power Reactors

Aqueous homogeneous reactor technology is not sufficiently advanced to permit the certain specification of fuels and of materials of construction for most power reactors. It appears most certain that uranyl sulfate solutions containing less than 10 g of uranium per liter and enough excess acid to prevent hydrolytic precipitation of the uranium can be contained in stainless steel, titanium, or zirconium equipment at temperatures at least as high as 300°C. Dilute uranyl sulfate solutions find their application in the cores of two-region, Th-U^{233} breeder or converter reactors for central station application and in special-purpose power reactors which are fueled with enriched uranium. Uranyl sulfate solutions containing 100 g of uranium per liter or more and enough excess acid to prevent the hydrolysis and precipitation of the plutonium probably can be contained in titanium or zirconium equipment at temperatures at least as high as 300°C. Fuels containing high concentrations of uranium are required for one-region, U-Pu power reactors and for the blankets of two-region, U-Pu reactors.

Uranyl fluoride solutions are limited in their application by their incompatibility with zirconium. Dilute solutions can be used in stainless steel and titanium for special-purpose reactors; however, the requirement that zirconium core tanks be used in two-region reactors to achieve satisfactory neutron economy appears to eliminate uranyl fluoride solutions from consideration for those reactors. More concentrated solutions can be used in large, one-region, U-Pu reactors pro-

vided that more comprehensive testing demonstrates the satisfactory corrosion resistance of titanium in concentrated solutions. Until such a demonstration has been made, uranyl fluoride solutions must be considered to be less promising than the sulfate solutions as power-reactor fuels.

The thermal and radiation instability of uranyl nitrate, the probable greater expense of obtaining and using N^{15}, and the lack of information regarding the corrosion of metals by uranyl nitrate solutions place the nitrate in a "less probable" category.

Uranium oxide, uranium phosphate, or mixed oxide-phosphate slurries appear particularly promising as fuels for power reactors. There is no evident problem in maintaining homogeneous mixtures of uranium and plutonium. These slurries apparently do not seriously corrode or erode stainless steels at temperatures as high as 250°C. Slurries are less attractive than solutions from the standpoint of developing rapid and cheap chemical processing in D_2O. Also, problems may be encountered in maintaining uniform suspensions of solid and liquid and in preventing plugging of transfer lines.

Thorium fuels for one-region reactors and the blankets of two-region reactors appear to be limited to thorium oxide or fluoride slurries or fluidized solids and to thorium nitrate solutions. The oxide slurry is considered to be the most promising. Although erosion problems are known to exist, they seem to be less difficult than expected. Based upon present knowledge there is little to be gained by using the more difficultly prepared fluoride slurries. Thorium nitrate, with the use of N^{15}, may be the only thorium compound that merits attention as a solution fuel. However, the thermal and radiation instability, probable expense of using N^{15}, and lack of corrosion information place thorium nitrate in a doubtful category.

Although thorium, uranium, and plutonium oxides can be kept in solution in phosphoric acid at high temperatures, the lack of container materials, other than noble metals, and the large neutron absorption cross section of the phosphorus (5 to 10 atoms of phosphorus per U or Th atom) that must be present require that these solutions be placed in the "very doubtful" category for use in central-station power reactors.

ENGINEERING DESIGN OF REACTOR PLANTS

As a result of the recommendations presented in ORNL-1096, the emphasis in the HRP has been directed toward solving the problems of circulating-solution reactors and plutonium production with uranyl fluoride or uranyl sulfate in D_2O as the fuel solution. The engineering design and development information obtained is generally applicable to solution reactors and to slurry reactors to the extent that slurries behave like solutions. The relatively small effort which has been expended specifically upon slurry studies has yielded some significant results. Some designs certainly will require modification or possibly complete redesign if they are used with slurry fuels. Provisions will have to be made to prevent the slurries from collecting in piping and equipment pieces and to resuspend the solids which settle when the circulation stops. Development of valves and feed equipment for handling solids may present formidable problems. The basic premise for the discussion of the engineering of aqueous homogeneous reactors presented here is the existence of a fuel – either a solution or a slurry – that can be pumped like a solution. Foreseeable difficulties proceeding from this supposition are reported.

The engineering discussion is presented to provide descriptions of typical reactors and equipment and some basis for examining capital costs. It is believed that equipment for handling slurries or solids, if at all practical, should not differ significantly in complexity and cost from equipment for solutions. Flowsheets and equipment are presented for both one- and two-region reactors. As suggested by the AEC for evaluation studies (*11*), the reactor designs are based on an electrical power output near 300 megawatts. Costs analyses also include information for determining the effect of plant power upon cost. The specific reactors discussed are:

1. a two-region Th-U^{233} breeder reactor employing a uranyl sulfate–D_2O solution in the core and a slurry of thorium oxide in D_2O in the blanket,
2. a one-region Th-U^{233} breeder reactor using a thorium oxide–uranium oxide slurry in D_2O.

The discussion is generally applicable to reactors employing uranium slurry fuels.

Optimum sizes for one-region and two-region aqueous homogeneous reactors can be specified

only after very thorough investigation of the engineering, physics, and economics of a wide range of reactor sizes and designs. This implies a background of knowledge and experience in design, construction, and operation of power reactors and associated plants that does not exist today. The approach taken here is that of selecting reactor sizes and designs upon the basis of engineering judgement, information available in reports on thorium breeder and plutonium production reactors (2, 28), experience gained in operating the HRE, and a number of preliminary economics studies. In the later analysis of the cost of power, the effect upon cost of departures from these reactor sizes and designs is discussed.

With the two-region, thorium breeder reactor, the best neutron economy is achieved with a small core surrounded by a blanket containing a high concentration of thorium. The optimum blanket thickness appears to be near 2 feet. However, as the core size is reduced, the critical concentration of uranium and the inventory of critical materials in the blanket and the external pumping systems relative to that in the core increase. Also, there must be some as yet unknown limit on the average specific power in the reactor core. A limit of 100 kw/liter is assumed to be a conservative increase over the 30 kw/liter achieved in the HRE. Because these two-region reactors can be small and still have good neutron economy, it appears attractive to provide a small reactor operating at the highest permissible specific power in the core as the heat source for a very large turbogenerator and to install enough reactors and turbogenerators in a single power plant to provide the desired capacity. A reactor with a 6-ft-dia core, operated at 320 Mw, and a 2-ft-thick blanket, operated at 130 Mw, which supplies steam to a 125-Mw turbogenerator is the basic two-region reactor considered in this study.

One-region reactors fueled with thorium and U^{233} or uranium and plutonium must be large to minimize the neutron leakage and still be critical with reasonable concentrations of fissile and fertile materials. The optimum diameter for reactors generating heat in the quantities required in large power stations is estimated to be near 15 feet. The inventory in the reactor is large and independent of the power level, and so the estimated power costs usually decrease with increasing power output. Steam for several large turbogenerators would be supplied by one reactor in a large power plant.

The two-region reactor using a uranium-plutonium fuel, somewhat different in concept from the similar thorium-fueled reactor, is considered attractive because the enriched core makes possible operation of a 10- to 15-ft-dia reactor with natural uranium as the feed material. A core fueled with plutonium is surrounded by a blanket containing a high concentration of partially depleted uranium. Part of the plutonium that is produced in the blanket is separated to provide fuel for the core; the remainder is burned in the blanket. It appears doubtful that a net conversion ratio of 1 or greater can be maintained in homogeneous thermal reactors based upon the uranium-plutonium cycle; so the inventory of fissionable material in the reactor is maintained by adding U^{235} to the blanket as natural, slightly enriched, or partially depleted uranium, depending upon which results in the lowest cost.

The absorption cross section of U^{238} is only four-tenths that of thorium; so the blanket must be thicker or the concentration of fissile material higher than that in thorium-blanketed reactors in order to obtain an equally low leakage from the blanket. Use of thicker blankets appears to be the more economical choice at the present time.

Most of the design and development work for aqueous homogeneous systems has been done at 250°C; consequently, most of the information presented in the engineering discussion applies to reactors operated at that temperature. Recent corrosion information indicates that corrosion at 300°C may be less severe than that observed at 250°C, thus removing one of the barriers to higher temperature operation. Because operation at 300°C offers the very attractive possibility of increasing the efficiency of conversion of heat to electricity, an examination is made of the effects of higher temperature operation upon the flowsheets, equipment, and costs.

Two-Region Reactor

Flowsheet. The power plant based on two-region reactors contains three reactors, each operated at a power of 450 Mw thermal, with about 100 Mw net electrical output. A flowsheet for a single reactor system operated at a maximum temperature of 250°C is given in Fig. 5.

The reactor consists of a 6-ft-dia spherical core,

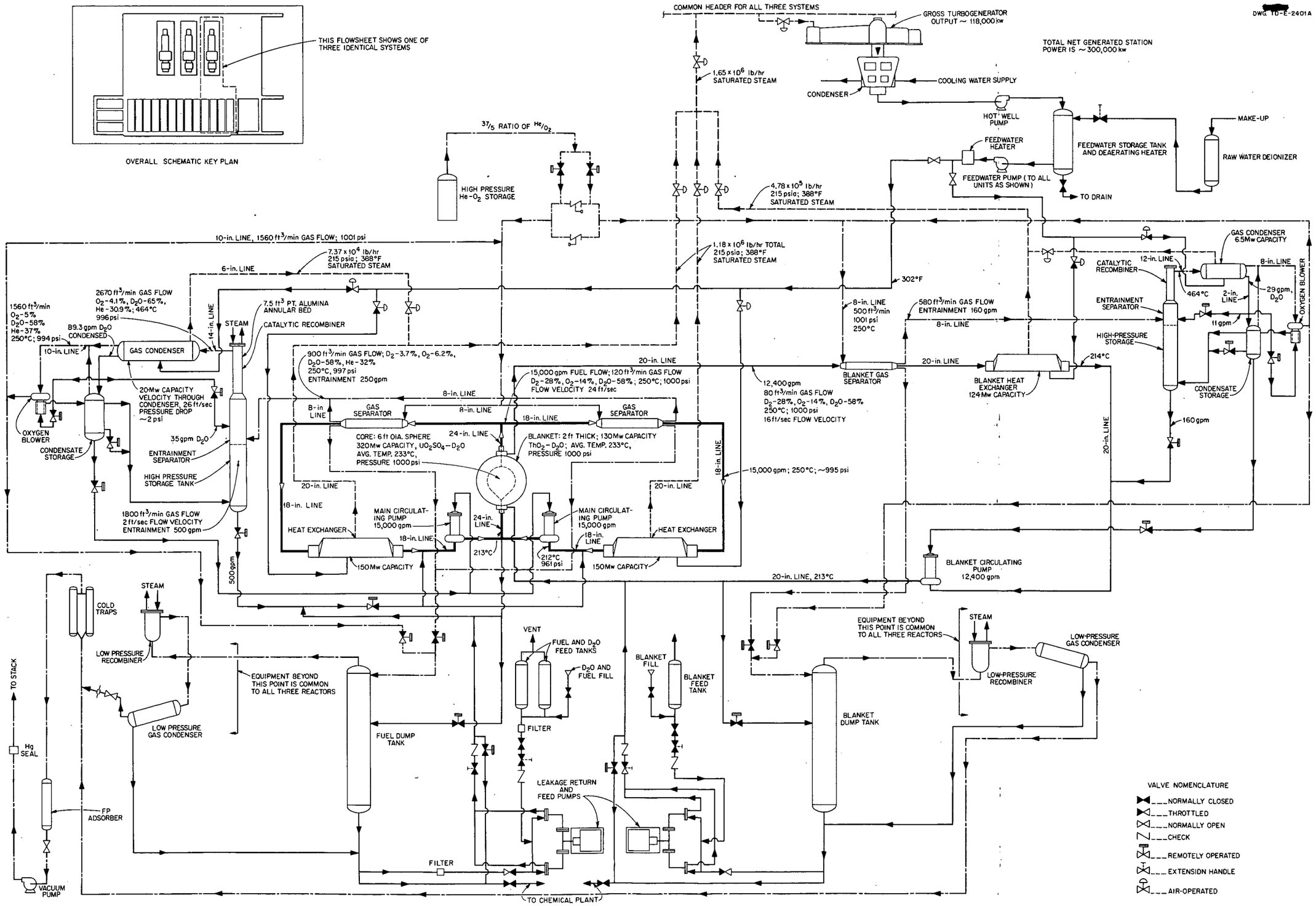

Fig. 5. Flowsheet for 1350-Mw, Two-Region, Homogeneous Power-Breeder Station.

operated at a power of 320 Mw (100 kw/liter), surrounded by a 2-ft-thick blanket which is operated at a power of 130 Mw (11 kw/liter). Under equilibrium conditions, a solution containing 1.30 g of U^{233} and approximately 5 g of total uranium – U^{233}, U^{234}, U^{235}, U^{236} – as uranyl sulfate dissolved in D_2O is circulated through the core at a rate of 30,000 gpm under a pressure of 1000 psia. Fluid enters the core at 213°C and leaves at 250°C. Decomposition of the D_2O moderator by fission fragments yields 240 cfm of gas containing 28 mole % D_2, 14 mole % O_2, and 58 mole % D_2O.

Liquid leaving the core divides into two parallel circuits which lead into centrifugal gas separators. There the explosive mixture of deuterium and oxygen is separated from the liquid and diluted below the explosive limit with a recirculated gas stream which contains oxygen, helium, and D_2O. The gas-free liquid circulates through heat exchangers and is returned to the core by canned-motor circulating pumps. In each circuit, 150 Mw of heat is removed from 15,000 gpm of liquid. Steam is produced in the exchangers at 215 psia and 388°F.

The gas streams from the separators are joined and flow into a high-pressure storage tank accompanied by about 500 gpm of entrained liquid. After the entrainment is removed in mist separators for return to the liquid system, the D_2 and O_2 are recombined when the gas passes into a catalyst bed containing platinized alumina pellets. Heat liberated in the recombiner increases the temperature of the gas from 250 to 464°C. The hot gases are cooled to 250°C in a gas condenser which has a capacity of 20 Mw and condenses D_2O at a rate of about 89 gpm. Some of the D_2O is used to wash the mist separators and to purge the pump bearings and rotor cavity; the remainder is either returned to the system through the high-pressure storage tank or held in condensate storage tanks during periods when the concentration of reactor solution is being adjusted. The gas is recirculated to the gas separators at a rate of 1530 cfm by an oxygen blower.

Similar gas- and liquid-recirculating systems are shown for the blanket which, it is assumed, will consist of a thorium oxide slurry in D_2O containing 500 to 1000 g of thorium per liter. The slurry is recirculated by means of a 12,400-gpm canned motor pump through a gas separator and through a heat exchanger having a capacity of 124 Mw. Recent indications are that the slurry particles will be so small that most of the fission products probably will escape from the particles. Without experimental data, the assumption has been made that the gas production rate per kilowatt will be four-fifths of that from the core solution. Gas formed in the blanket is separated and diluted in the gas separators and then circulated through a high-pressure storage tank. It next passes through mist separators, a catalytic recombiner, and a 6.5-Mw gas condenser; then the cooled gas is recirculated as in the core system. Condensate is used to wash the mist separators and to flush slurry from the bearings and rotor cavity in the circulating pump. A connection between the core and the blanket gas systems assures that no large pressure differences will arise between them.

Both core and blanket systems are provided with low-pressure storage equipment consisting of dump tanks, condensers for removing the heat after shutdown, and catalytic D_2O recombiners. The recombination applies both to the deuterium and the oxygen dissolved in the fuel dumped from the high-pressure system and to that generated in the storage tanks by radiations. Gases which are let down from the high-pressure systems into the storage tanks pass through cold traps to remove D_2O and through fission-product adsorbers before they are exhausted to the atmosphere. Feed pumps similar to the pulsafeeder pumps used in the HRE, or some acceptable substitute, are provided for introducing D_2O and fuel into the high-pressure system. A similar pump is shown for additions to the blanket. Although separate dump tanks and feed pumps should be supplied for each reactor, the other components of the low-pressure system may be common to the three reactors.

The reactor is pressurized with a mixture of helium and oxygen which is admitted as required. It is expected that most of the fission-product gases will be retained in the high-pressure gas-circulating systems with only whatever small, daily letdown is required to adjust the pressures. Calculations for a similar system indicate that enough Xe^{135} will be transferred into the gas stream to reduce the xenon poisoning (21) in the reactor by a factor of 5 to 10.

The power cycle for each reactor utilizes saturated steam at 388°F and 215 psia from the gas condensers and the main heat exchangers to drive three parallel 115-Mw turbogenerators. With feed water returned to the exchanger at about 290°F, the over-all efficiency of the cycle is expected to be 23.4%, yielding 105 Mw of electrical power from each reactor.

Reactor Vessel. A conception for a two-region spherical reactor vessel is shown in Fig. 6. It consists of a 6-ft-dia core tank enclosed in a 10-ft-dia pressure vessel. The ½-in.-thick core tank, which is fabricated from zirconium, is provided with zirconium screens at the inlet to diffuse the incoming flow, thus generating slug flow through the core (22). The 24-in.-dia nozzles at the inlet and at the exit are connected to the stainless steel piping through mechanical joints. A bellows expansion joint is provided to reduce the stresses which could result from large differences in temperature between the core tank and the pressure vessel in which it is installed.

The 4-in.-thick pressure vessel is designed to withstand 1000 psi, being fabricated from carbon steel, and is lined with stainless steel. In this design, the space between the core tank and the pressure vessel is considered to contain a thorium oxide slurry which can be circulated like a solution. Because the specific power in the blanket is low, no thermal shielding is required to protect the pressure vessel.

The design of the core tank is based upon the premise that the pressure between the core and the blanket will be balanced within a few psi. Nuclear calculations indicate that zirconium as much as ½ in. thick will not seriously affect the neutron economy. With zirconium this thick, it is calculated that the core pressure can exceed that in the blanket by 300 psi without stressing the tank material beyond the yield point. Similar calculations show that the blanket pressure probably can exceed that in the core by 300 psi before incurring the risk that the core tank might collapse. With such a large permissible pressure difference, it seems reasonable to expect that the necessary balance between blanket and core pressure can be maintained, and even that it may be possible to use a thinner tank wall. Whether or not the expansion joint is necessary has not been completely decided. The thermal expansion coefficients of zirconium and carbon steel are so nearly equal that the difference in expansion will be only 0.15 in. if the two vessels are heated from 50 to 250°C at the same rate. If, however, there is a large difference in heating rates, severe stresses might be produced in the core tank. Experiments are being made to permit a more accurate analysis of stresses and deflections as a function of loading of the core-tank nozzles.

The reactor weight, when filled with fuel and blanket material, is about 80 tons, which is easily supported on a ring fastened to the pressure vessel. Although a spherical vessel is shown in the drawings and is considered with favor at the present time, it is possible that subsequent design and development effort will show that better neutron economy and hydrodynamic conditions can be obtained with cylindrical systems.

Gas Separator. It is experimentally established that 1.67 molecules of D_2O are dissociated per 100 ev dissipated in the core solution (19). At full power, this generates 240 cfm of gas in the core. This gas, which comprises 6.6 lb-moles of D_2 and 3.3 lb-moles of O_2 per minute, appears as bubbles in the solution. These gas bubbles are in turn saturated with D_2O at 250°C and 1000 psi, amounting to 13.8 lb-moles per minute. This saturated gas must be separated from the fuel solution, the D_2 and O_2 recombined, and the resulting D_2O returned to the system. These steps are taken in order to maintain the proper ratios of uranium to D_2O in the reactor, to prevent the loss of an expensive moderator, and to minimize the volumes of radioactive gas that must be handled.

In the HRE, the separation is accomplished by causing the solution in the reactor core to rotate as a vortex. The gas is centrifuged to the center of the vortex where it forms an axial void from which it is piped to a low-pressure recombiner system. The pressure drop for vortex flow through the core increases with core size, and the efficiency with which the gas can be separated is decreased (23, 24, 25). As a result, for cores substantially larger than the core in the HRE, it is believed that use of a properly designed external separator is preferable to internal vortex separation.

A separator proposed for the two-region reactor system is shown in Fig. 7. It consists of a section of 24-in. pipe connected to the 18-in. circulating-system pipe by means of reducing

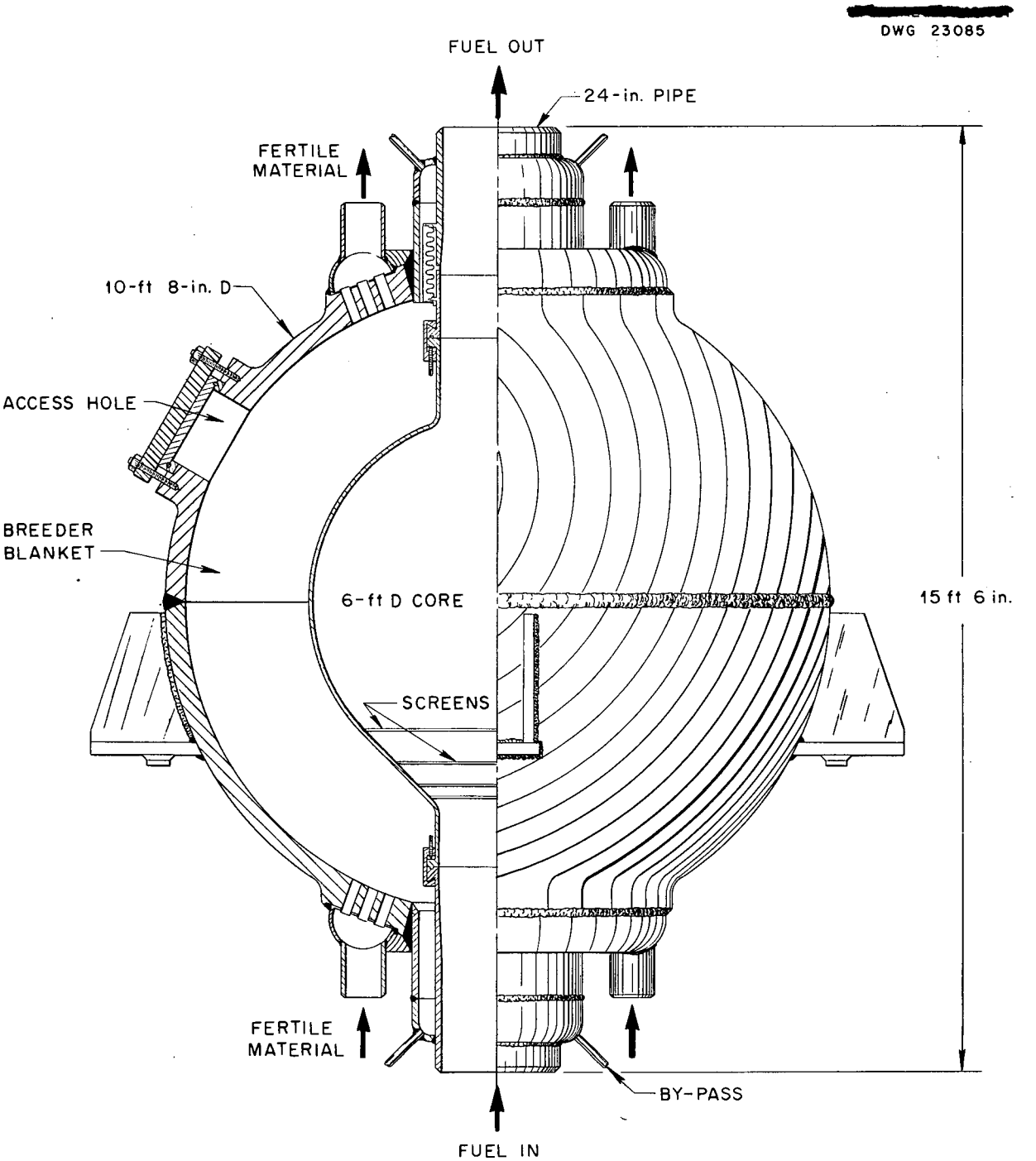

Fig. 6. Two-Region Reactor Vessel.

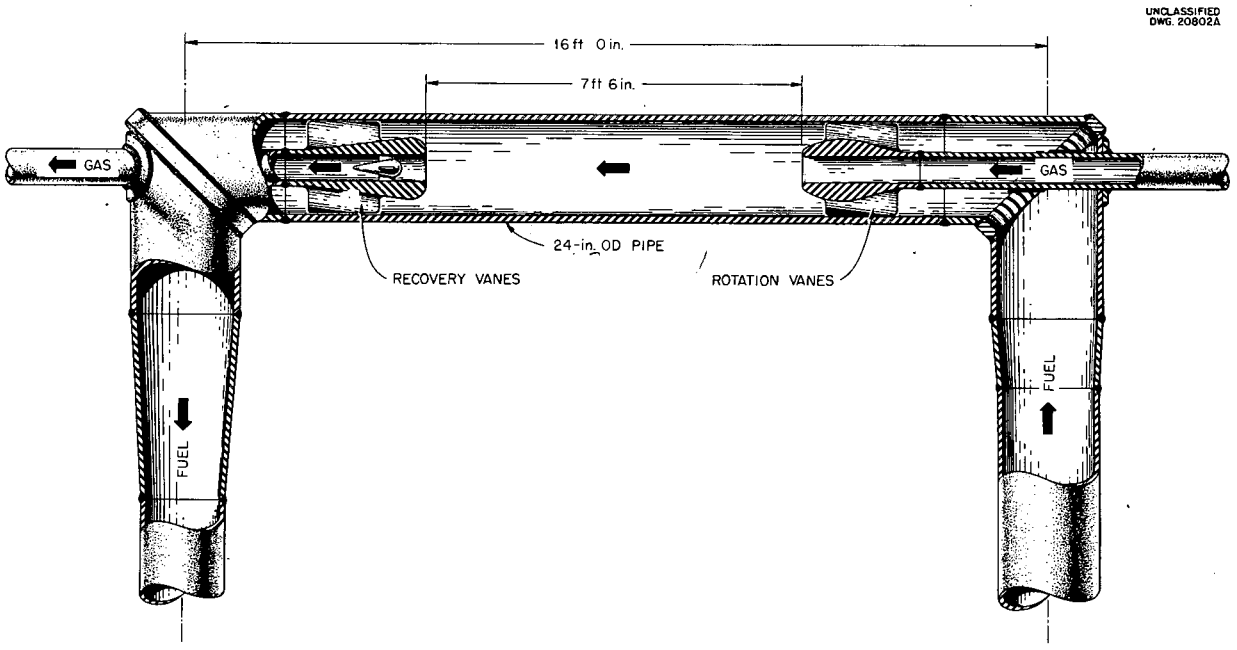

Fig. 7. Gas Separator.

sections. Vanes at the entrance to the separator generate a vortex in the liquid which causes the gas bubbles to be centrifuged to a central void. A sufficiently large void is made so that, without excessive pressure drop, a mixture of oxygen, helium, and D_2O can be circulated through the separator to dilute the emerging gases below the explosive limit. This void also provides a volume into which solution from the core can expand in the event of a power surge with a concomitant rapid temperature rise. Calculations show that an effective separator length of $7\frac{1}{2}$ ft is sufficient to obtain more than 95% gas removal. Liquid leaving the gas separator passes through vanes, thereby recovering part of the rotational energy. Under normal operating conditions, as much as 250 gpm of core solution may pass out of each separator with the gas. This mixture of gas and solution flows to the high-pressure storage tank from which the solution is returned to the reactor. Each of the two required gas separators in the fuel circulating system is capable of handling a flow of 15,000 gpm.

Main Heat Exchanger. Several designs have been made for heat exchangers to remove heat from the fuel solution in the main circulating system, each employing forced convection of the reactor fluid through the tubes and boiling of water outside the tubes. The conception shown in Fig. 8 is one of the most promising. It resembles a standard shell and tube exchanger but embodies some features which are not required in standard commercial exchangers.

The exchanger is designed to remove 150 Mw of heat, utilizing five thousand $\frac{3}{8}$-in.-OD tubes with 0.049-in.-thick walls. Such a large exchanger requires tube sheets 5 ft 2 in. in diameter which must be 10 in. thick for 1000-psi service. The over-all heat transfer coefficient is estimated (26) to be 750 Btu/hr·ft^2·°F. For leakproof construction, the small tubes are welded to both tube sheets. In the design shown, it is supposed that the tube sheets and heads will be carbon steel, clad with stainless steel or some other corrosion-resistant material. The 8-ft-dia shell of the exchanger can be made of carbon steel. With a

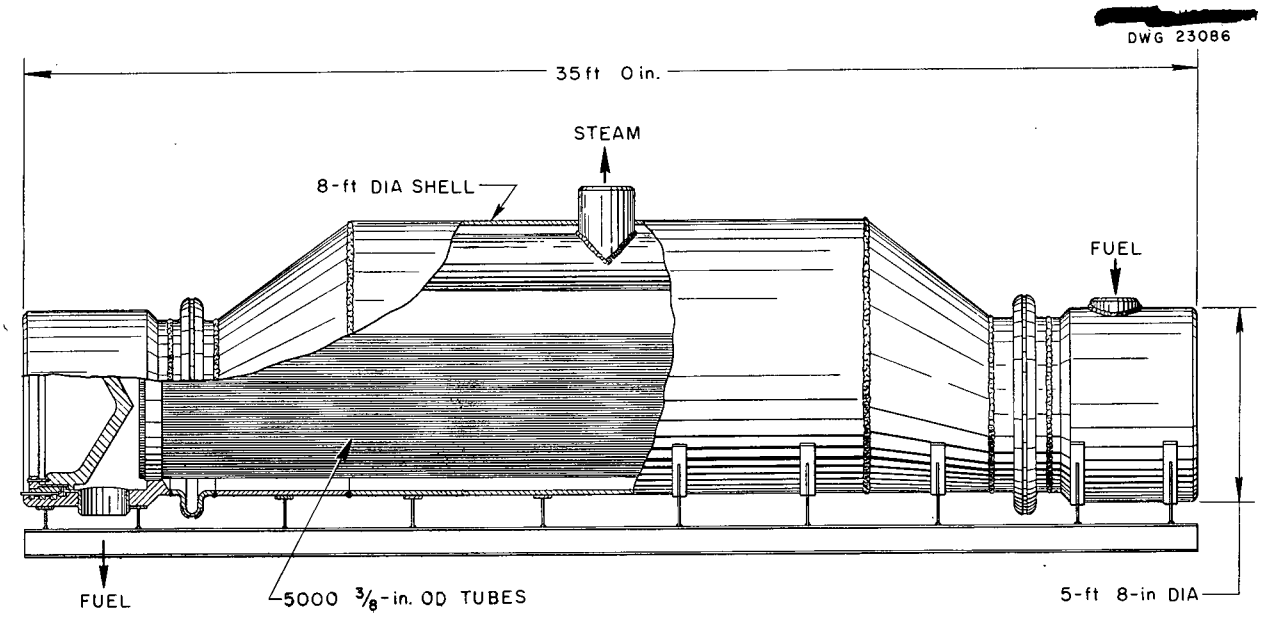

Fig. 8. A 150-Mw Steam Generator.

straight-through exchanger of this type, it is necessary to provide for the relative expansion of the tubes with respect to the shell. This can be accomplished either by using bowed-tube construction or by putting expansion joints in the shell.

There are several major problems involved in the design and construction of such an exchanger. First, it is desirable to keep the fuel holdup to a minimum. This is accomplished by using small-diameter tubes, sufficiently high fluid velocities to obtain good heat transfer coefficients, and special inserts in the heads to displace fluid. Second, it is desirable to keep the pressure drop through the heat exchanger within bounds. In this particular design, the flow velocity is kept below 15 fps in order to limit the pressure drop to about 20 psi. Greater velocities contribute very little to reducing holdup through increasing the over-all heat transfer coefficient, while the required increased pressure drop complicates the pump design where corrosion is sensitive to fluid velocity. Third, the exchanger must be completely leakproof. To accomplish this, not only must the tubes be welded to the tube sheets but the welds must also be extensively tested to ensure that there are no leaks when the exchanger is put into service. The head on the exchanger is so designed that it can be removed and the tubes inspected and repaired before the exchanger becomes radioactive. Before the exchanger is installed in a reactor system, it is expected that seal welds will be made in order that no leakage can occur through the joints in the head.

A major operational hazard to which the system is subject is the possibility that an exchanger tube may completely fail, thus discharging large amounts of radioactive reactor solution into the steam system. The probability of such a leak can be minimized by careful testing and inspection and, if necessary, by using duplex tubing. Duplex tubing consists of a tube which is grooved on its outer surface and expanded into a second tube. The inner tube is welded into the tube sheets, and the ends of the outer tube vent into the shell side of the exchanger. If the inner tube should crack or be completely penetrated by corrosion, a small amount of radioactive solution would leak into the steam but the system could be shut down before a major leak occurred. Any failure of the welds or tubes in the exchanger would require that the exchanger be replaced, since the radioactivity in the used exchanger would be so intense that repairs could not be made for many months.

Main Circulating Pump. One of the major problems associated with the development of aqueous homogeneous reactors has been to obtain a satisfactory pump for circulating the fuel solution. The

high level of radioactivity in the solution requires that the pump be completely leakproof. Repairing a pump in a radioactive system may be very time consuming; consequently, the pump must operate for long periods without maintenance if the reactor is to be a reliable power producer.

Within recent years, completely enclosed, sealed motor pumps have been developed for the submarine reactor program. Such pumps, manufactured by the Westinghouse Electric Corporation, Byron Jackson Company, and the Allis-Chalmers Mfg. Company, have been operated for long periods, pumping water at 4000 gpm against a 250-ft head under a pressure of 2000 psi at a temperature above 500°F. Similar pumps are proposed for aqueous homogeneous reactors. Oak Ridge National Laboratory has cooperated with Allis-Chalmers in designing a 20,000-gpm, sealed motor pump. Recently, the Westinghouse Corporation has proposed a design for a 16,000-gpm pump. Thus there is reasonable assurance that sealed motor pumps can be made with the capacities required for large reactors.

Figure 9 is a cross-sectional elevation of the Allis-Chalmers pump designed to circulate 20,000 gpm of solution against a 100-ft head of fluid in a system operating at 1000 psi and 250°C. Two somewhat smaller pumps with 600-hp motors would be required to circulate the 30,000 gpm through the two-region reactor. The pump has a totally enclosed mechanism employing a metallic can which seals the motor stator from the high-pressure fluid. The rotor, which includes a metal-sealed armature, rotates in the high-pressure fluid. Hydrostatic-pump bearings, which support and align the rotating parts, are pressurized with solution or condensate by using an auxiliary impeller attached to the rotating shaft or by means of an external pump. The pump is mounted vertically with the impeller at the bottom. The fluid-filled rotor and bearing chamber is separated from the impeller and the volute by a labyrinth. By injecting D_2O (condensed in the high-pressure system) into this chamber and flushing it continuously through the labyrinth, the corrosion on the rotor and bearing parts can be minimized. This auxiliary flow also reduces the amount of radioactive material in the chamber and reduces the amount of radiation reaching the electrical insulation. The stator has tubular conductors through which water is pumped to keep the motor cool.

Particular attention has been directed to designing the pump for ease of maintenance. When the top flange is unbolted, the entire pump mechanism can be withdrawn, leaving only the high-pressure casing in the pipeline. The stator and the upper bearing may be replaced separately if desired. The amount of radioactivity in the upper end of the pump is expected to be small enough that there will be no great radiation hazard to maintenance personnel making replacements.

Catalytic Recombiner and High-Pressure Storage Tank. The mixture of liquid and gas from the gas separators is piped to a high-pressure storage tank which contains equipment for separating the liquid from the gas and a catalytic bed for recombining the deuterium and oxygen. A diagram of the vessel is shown in Fig. 10. It is made of carbon steel, lined with stainless steel, and has sufficient volume to provide a reservoir for some fuel storage in the high-pressure system. Since the vessel is $4\frac{1}{2}$ ft in diameter, poison plates are required to ensure that a chain reaction cannot be initiated in the storage tank.

The entrainment separator contains two or more layers of woven-wire stainless steel packing. A part of the packing is washed with D_2O to prevent the fuel solution from drying on the wire and to increase the efficiency of removing the uranium-bearing liquid. The remainder of the bed is used to separate droplets of D_2O from the stream. If the reactor releases iodine and other halogens, they are expected to react with the metal in the de-misters. This will generate about 2 Mw of heat in the de-misting sections and evaporate a considerable amount of D_2O. A flow of 35 gpm of D_2O is used to wash the bed.

The catalytic recombiner is a tubular basket, $4\frac{1}{2}$ in. thick, with an inside diameter of 9 in. and a length of 6 feet. It is packed with $7\frac{1}{2}$ ft^3 of a platinized alumina catalyst containing 0.3% platinum. In small-scale tests (27), excellent conversion ratios have been measured for space velocities up to 2×10^6 hr^{-1}, measured in volumes of gas at STP per bed volume per hour. The space velocity in this catalyst bed is about 500,000 hr^{-1}, which should result in nearly 100% conversion. The pressure drop through the de-mister and the catalytic recombiner is estimated to be approximately 1 psi.

Gas Condenser. Heat produced by recombination of D_2 and O_2, plus that resulting from the decay of fission products in the gas stream and the

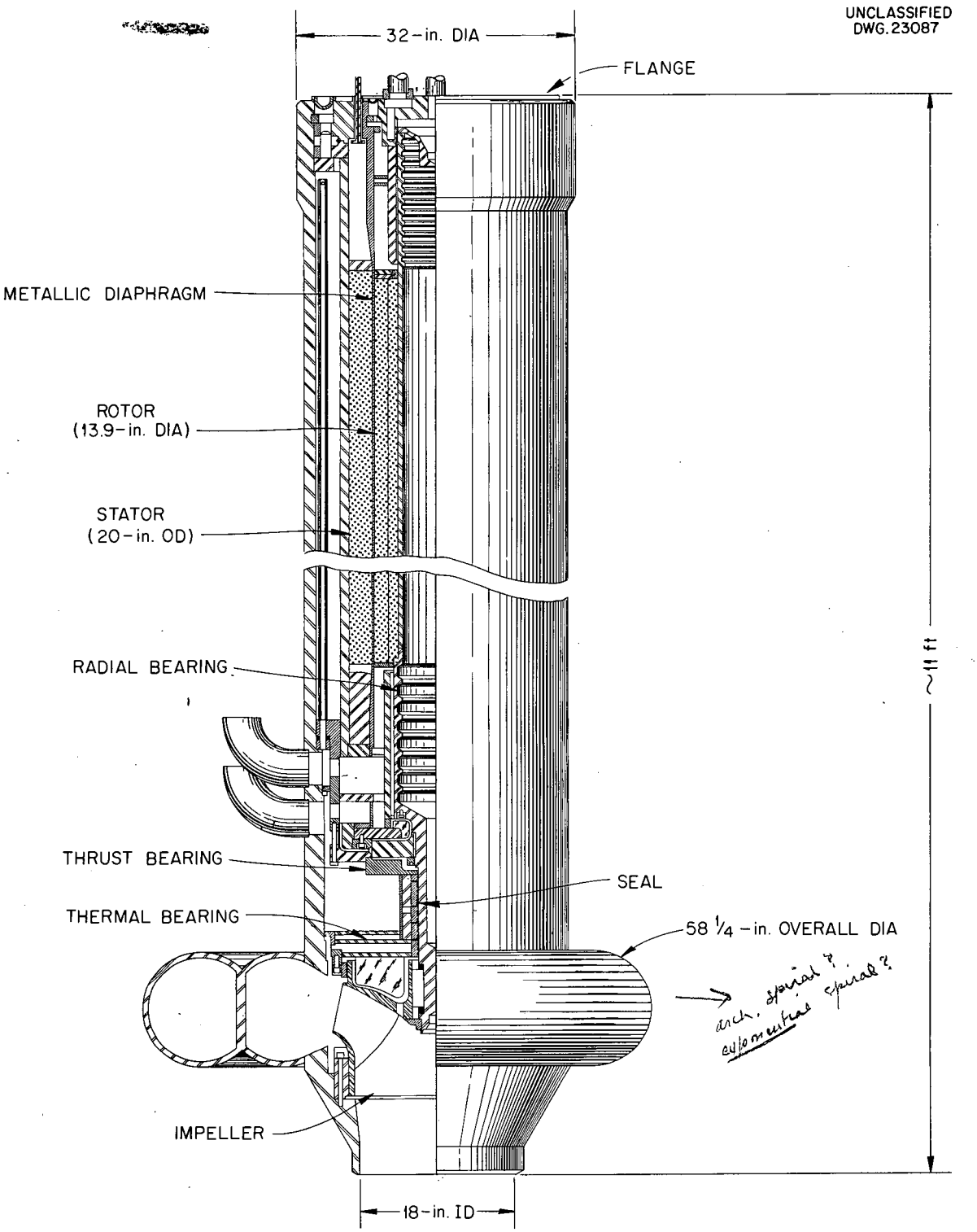

Fig. 9. A 20,000-gpm Sealed Motor Pump.

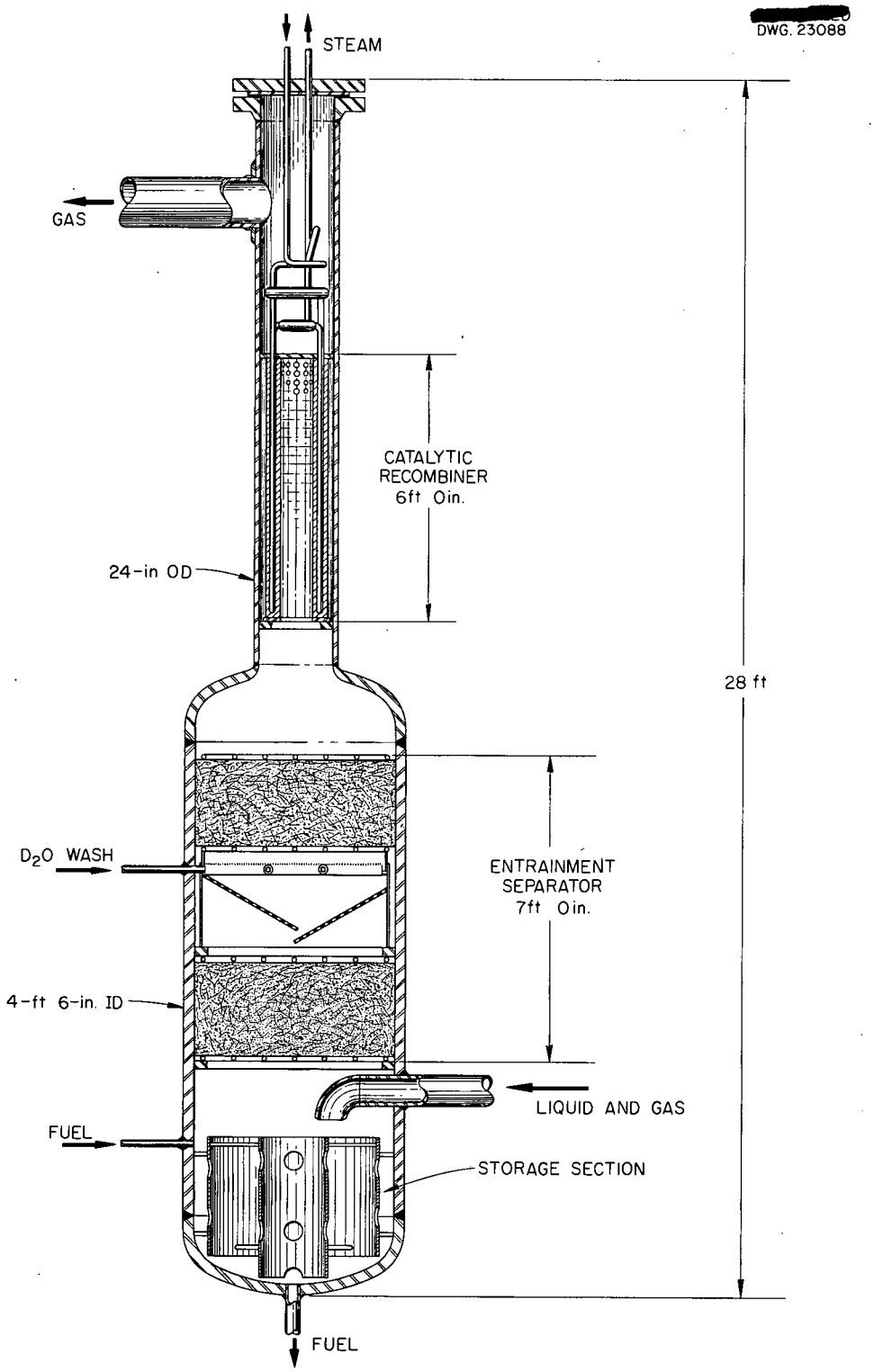

Fig. 10. High-Pressure Vessel.

de-mister, increases the gas temperature from 250°C in the gas separators to 464°C as it leaves the recombiner. The gas is cooled to 250°C, and part of the D_2O is condensed by means of a gas cooler and condenser. The condenser resembles the main heat exchanger but is much smaller, with a capacity to remove 20 Mw of heat while condensing 89 gpm of D_2O from a gas containing 40% noncondensables. The D_2O condenses inside, and steam is generated outside, 478 one-inch OD, 13 BWG stainless steel tubes, each 12 ft long, that provide 1500 ft^2 of surface. The exchanger has a 48-in.-dia carbon steel shell. Tube sheets and heads which contact the process gas are stainless steel. Part of the condensate from the gas condenser is used to wash the de-misters and to provide D_2O for purging the pumps. The remainder is returned to the system through the high-pressure storage tank or retained in a condensate storage tank during periods when the concentration of fuel in the reactor is being adjusted.

Gas-Circulating Pump. Cooled gas is returned to the separators by a circulating pump. Although such a blower has not been designed, it is expected to be similar to the sealed motor pump made for circulating liquid. One suggestion is that a standard, 85-hp, sealed motor be inverted so that it can be kept filled with condensate, thus lubricating the bearings, and that a special volute and impeller be provided to meet the requirements of the gas system. The blower must circulate 1560 cfm of gas having a density of 1.45 lb/ft^3 with a pressure rise of 6.2 psi.

Blanket-Circulating System. Equipment shown for the blanket liquid and gas systems is similar to that provided for the core. Although only 12,400 gpm of liquid is circulated and 124 Mw of heat removed in the liquid-circulating loop, it is assumed that the pump and the heat exchanger will be the same as those provided for the core loops. Thorium slurries which have been circulated appear to have heat transfer and flow properties so similar to those of solutions that the circulating equipment will require only minor changes. Equipment in the gas-circulating system for the blanket will be smaller than that described for the core. The particles in the thorium oxide slurries which have been circulated are 1 μ or less in all dimensions. Consequently, most of the fission fragments should escape from the solids. It is estimated that the gas production rate in the blanket per kilowatt of heat produced will be about four-fifths of that in the core. About 6.5 Mw of heat is liberated in recombining the D_2 and O_2, and 500 cfm of diluent gas is circulated.

Development of a fluidized solids blanket would require that only D_2O be circulated outside the reactor vessel so that a smaller pump and heat exchanger could be used.

Valves and Piping. All the piping in the high-pressure liquid and gas systems must be schedule 80 to 100 stainless steel, type 347 or possibly 304L. Workmanship must be of the highest quality. Each weld must be carefully x rayed and tested for leaks at pressure and temperature. Providing joints in the system such that heat exchangers and other equipment can be replaced is one particularly difficult problem. At present it appears necessary to have flanged joints which can be disconnected remotely with ease. Ring-joint flanges with oval rings have been used successfully in the HRE in sizes up to 24 in. in diameter. A more desirable type of connection would be a welded joint. Machines are now available that could be adapted to cutting pipes by remote control, and there seems to be a good possibility that remote welding machines will be developed within the next few years which can be used to join piping in a reactor system.

An attempt has been made to avoid the use of large valves which are required to seal against a pressure of 1000 psi. The largest such valve in the system will be the main dump valve, which may have to be a 6-in. size for this service. The other valves in the system which must seal against high pressures are 2 in. or smaller. A few large valves may be required only to control flows, and they may be permitted to leak small amounts of liquid through the seat. Specifications for the valves to be used in aqueous homogeneous reactors are expected to be based upon experience with valves developed for the HRE and the STR.

Liquid velocities in the pipes are near 26 and 16 fps for the core and the blanket systems, respectively. Economic studies which include cost of fuel solution, piping, and pumping indicate that the optimum velocity in the piping of the core circulating system may be near 40 fps. If corrosion tests in large systems continue to show little or no break in the corrosion curves at velocities below 50 fps in dilute fuel solutions, the

fluid velocities should be increased. Velocities higher than 16 fps may prove to be permissible in the piping of the blanket-circulating system, depending upon the abrasiveness, density, and viscosity of the material being pumped.

Low-Pressure System. Provision must be made in the power-reactor station for storing the radioactive solutions and slurries at low pressure and low temperature when maintenance work is being performed on the reactors. Since it is expected that the reactors will operate more than 80% of the time, much of the equipment can be used for all the reactors. The low-pressure system proposed for a 300-Mw power station contains six dump tanks, each 6 ft in diameter and 40 ft long. One tank will hold the core solution and one tank the blanket materials for each reactor. The core-solution storage tanks can be connected by a common header to a condenser for removing the heat released when a reactor is dumped.

A catalytic recombiner will be included in the system to recombine the D_2 and O_2 dissolved in the reactor fluid when it is dumped and to recombine the D_2 and O_2 resulting from the decomposition of D_2O by the residual activity in the solution. Gases which are let down from the high-pressure system into the dump tanks and those fission-product gases which are released in the dump tanks are passed through the recombiner, the condenser, and the cold traps where the D_2O vapor is removed, and then through charcoal traps to remove the fission products before being discharged to the atmosphere. Design studies are required in order to show whether the low-temperature charcoal traps similar to those used in the Arco chemical plant or the high-temperature charcoal traps similar to those used on the HRE are the more satisfactory for a large reactor station.

Feed pumps will be provided for charging new material to the reactor and to return material which has leaked through valves. Pulsafeeder pumps similar to those used on the HRE probably would prove to be satisfactory. They have been used successfully for pumping uranyl sulfate solutions and uranium oxide slurries against pressures above 1000 psi. Other means would be required for feeding solids of sizes larger than several microns to the blankets.

Two-Region, 1350-Mw, Reactor Power Plant

Description of Plant. An arrangement of reactor cells and power plant for a station that produces 1350 Mw of heat and 316 net Mw of electricity is presented in Figs. 11, 12, and 13. Three large cells are provided for the reactors and associated high-pressure equipment and a fourth is provided for the dump tanks and low-pressure equipment. Each reactor cell is divided into compartments for reactor, heat exchangers, pumps, and gas-circulating systems. The low-pressure equipment cell contains compartments for dump tanks, feed equipment, heat and fission-product removal, D_2O recovery, and the limited amount of chemical processing that can be included in the reactor circulating system. Radiation from the cells is reduced to tolerable levels under operating conditions by concrete shielding. The individual compartments have sufficient shielding to permit limited access when equipment is being replaced.

The shielded compartments, which comprise the reactor building, are serviced by a gantry crane for installing and removing equipment in the cells. Coffins are provided for reducing the radioactivity to tolerable levels while radioactive materials are transported from the cells to a pool where they are stored under water until the intensity of radioactivity is sufficiently reduced that repairs can be made or until the parts can be removed to a burial ground.

Control rooms, offices, maintenance and storage facilities, and turbogenerator equipment are located adjacent to the reactor cells. The turbogenerators, which are serviced by a second gantry crane, are unhoused and only a minimum of cover is provided for the other facilities.

D_2O Inventory. In estimating the D_2O requirements for the two-region reactor station, it is assumed that enough will be required to fill the high-pressure systems at 20°C without correcting for volumes occupied by uranyl sulfate or thorium oxide. When the system is heated to 250°C, the D_2O volume increases 25%. This additional volume is considered as sufficient to provide the holdup required in the low-pressure system. The amounts of D_2O which are involved in chemical processing and D_2O recovery operations are included in chemical-plant inventories.

The D_2O holdup and the distribution of D_2O for one 450-Mw, two-region reactor are given in Table 5. A total of 44 metric tons is required for one reactor. Three reactors would require 132 metric tons or an investment of $11,600,000 in

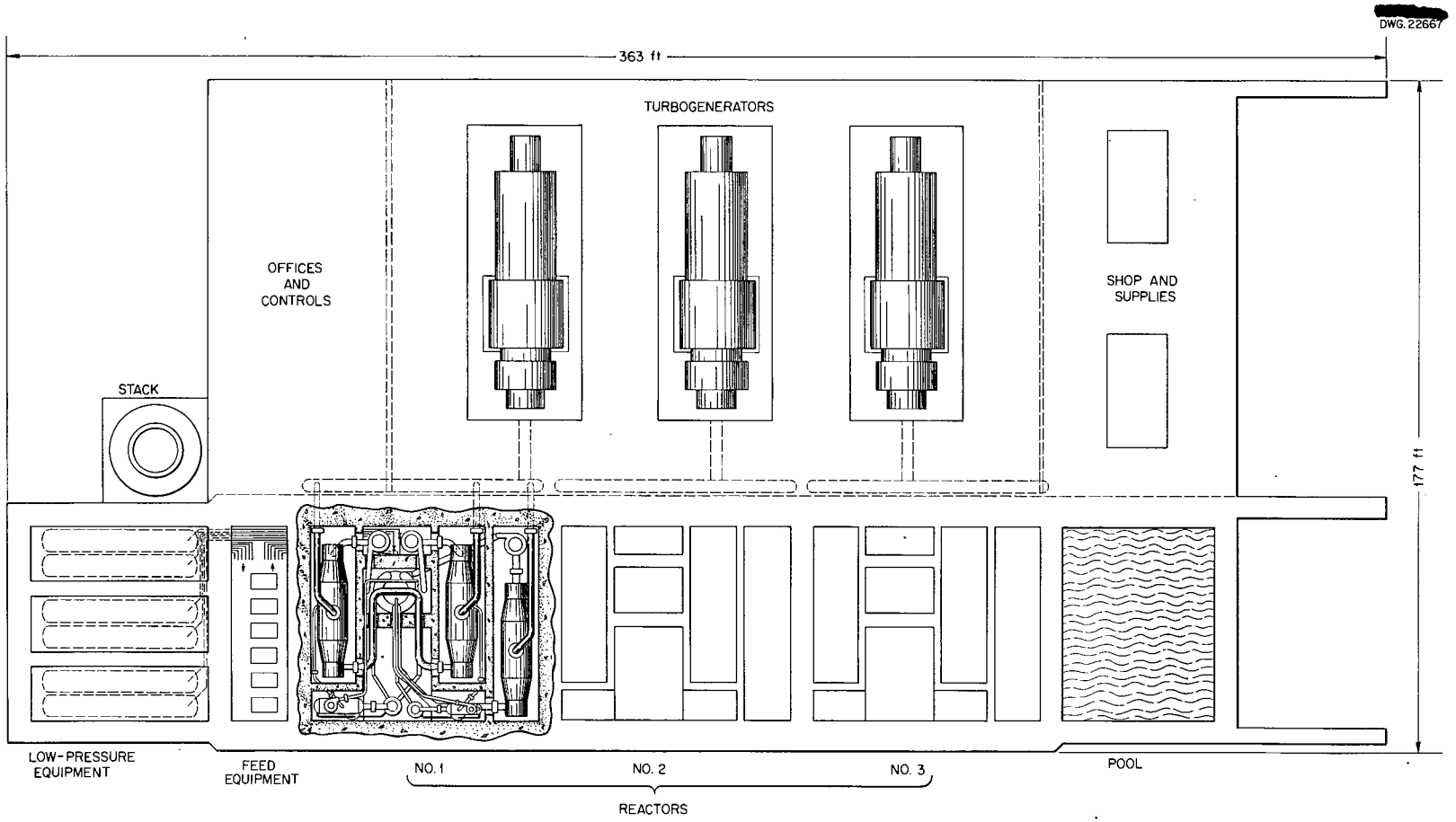

Fig. 11. Plan of Two-Region Reactor Station.

[redacted]
DWG. 22668

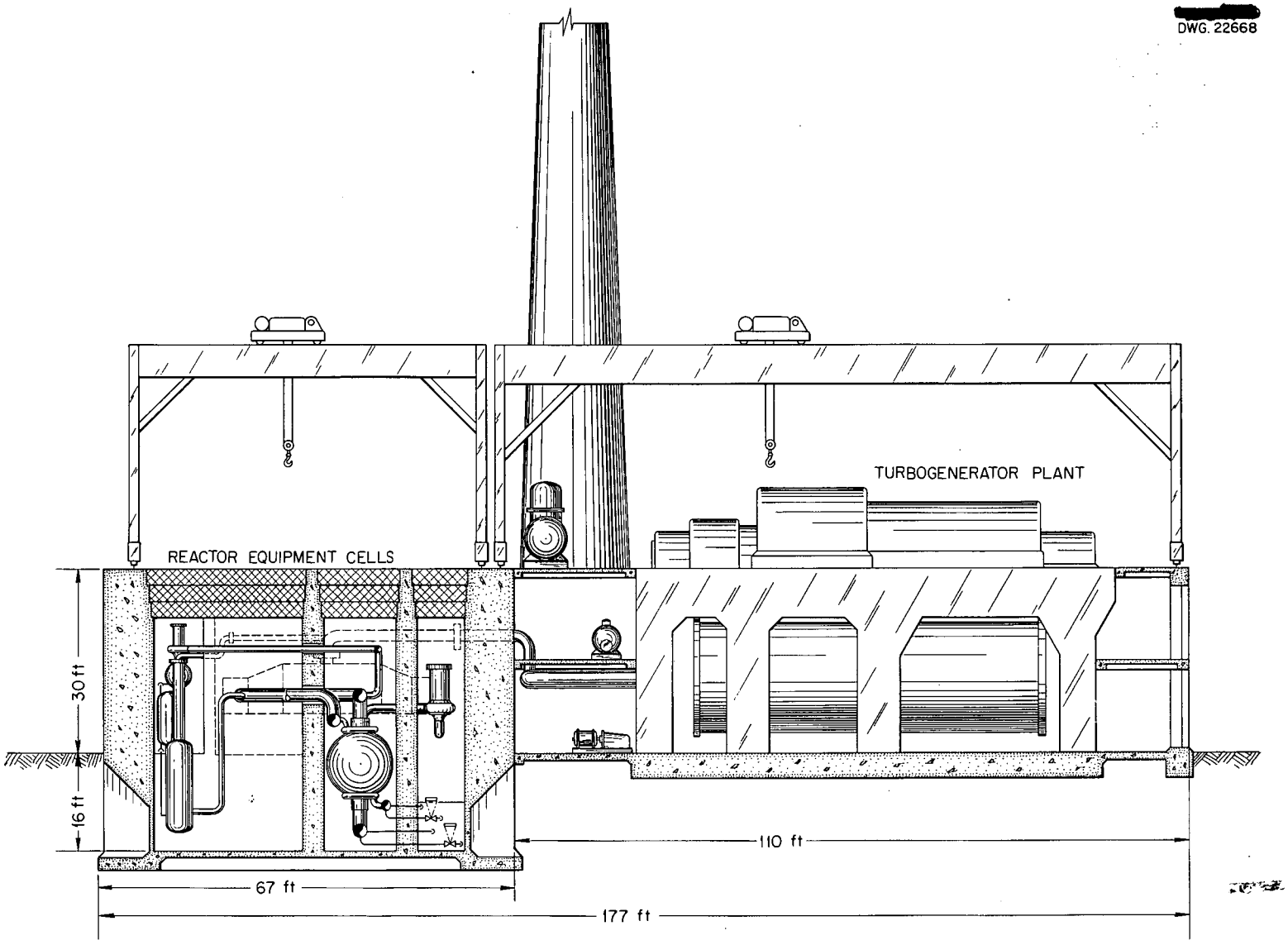

Fig. 12. Elevation of Two-Region Reactor Station.

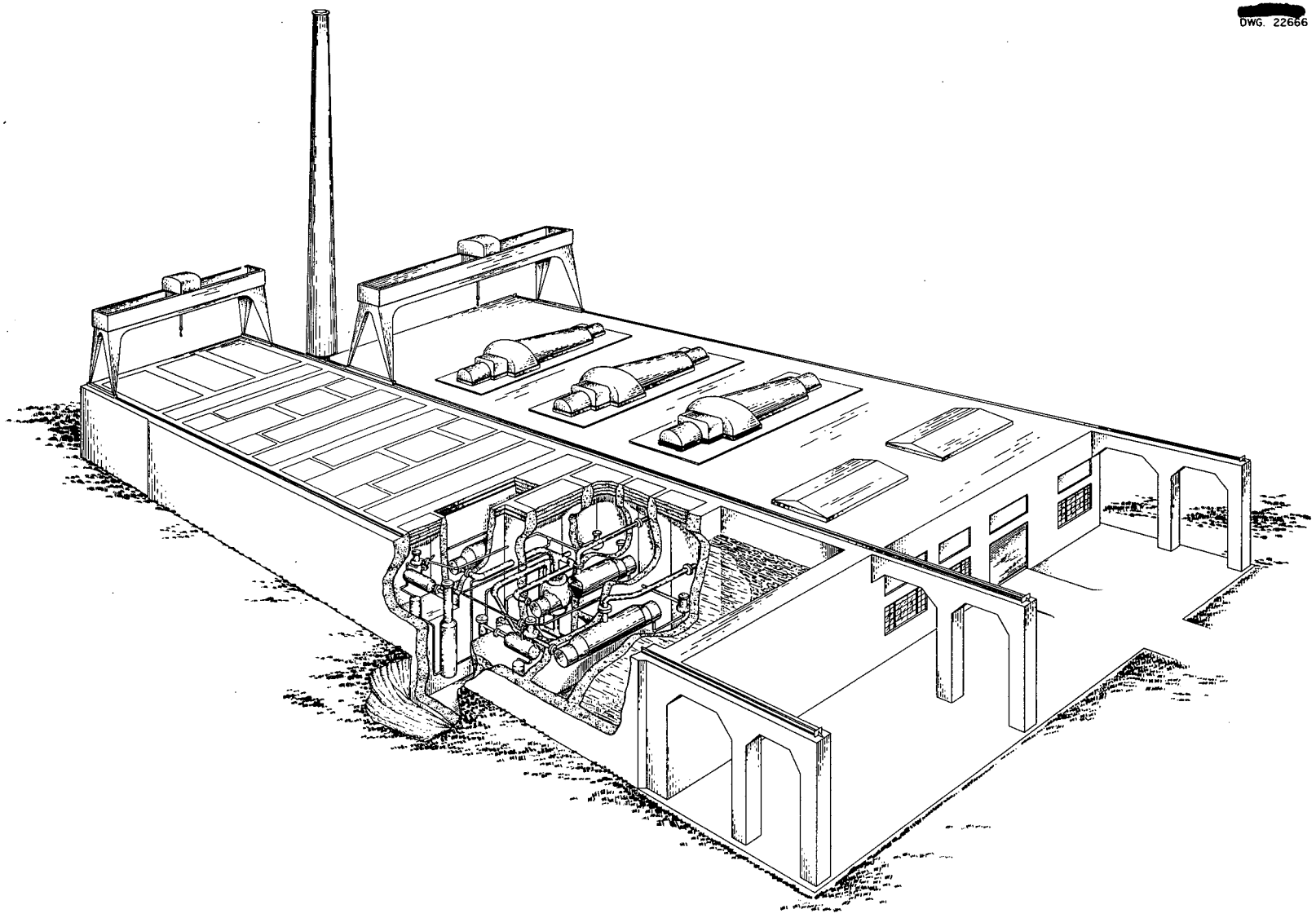

Fig. 13. Two-Region Reactor Station.

$40/lb D_2O. The average specific power in the system is 11.3 kw/liter or 10.2 Mw/ton of D_2O. The specific power in the heat-removal and circulating systems is 20 kw/liter for the core solution and 14 kw/liter for the blanket slurry.

Power Consumption. The net output of the power plant is obtained by subtracting the power consumed in operating the reactors from the net output of the turbogenerator plant. The circulating pumps for each reactor require 1350 kw, which accounts for the major consumption in the reactor plant. An additional 250 kw per reactor is considered as an ample power supply for the gas-circulating pumps, feed pumps, circulating pumps, and other electrical equipment in the low-pressure systems and for control and lighting power. The total is 1600 kw per reactor or 4800 kw for the entire reactor plant.

Cost of Reactor Plant. Data from a cost analysis for the two-region reactor plant are presented in Table 6. The total cost of $15,730,000 is equivalent to $11.60 per kilowatt of heat-generation capacity. Since the estimate was not made for construction, it contains no contingency. Rather, it seems more appropriate to attempt an evaluation of the accuracy of the estimate. The status of the design is such that the accuracy is probably no greater than ±30%. The most probable cost should be in the range of $15,000,000 to $20,000,000, or $11 to $15 per kilowatt of heat-generation capacity.

It must be emphasized that these costs were obtained on the basis of procedures that were developed for estimating costs of conventional chemical or radiochemical plants. While they should apply to reactor plants after the equipment has been developed and the feasibility demonstrated, they could not apply to plants constructed in the near future. The estimates are useful in providing a part of the basis for choosing between reactor systems studied under similar conditions, for suggesting areas which require improvement in design, and for indicating possible costs of highly developed systems. Whereas the costs obtained in this analysis are only an encouraging indication that low reactor costs may be obtainable, very high costs obtained under similar conditions could indicate the need for a completely different approach in designing power reactors.

Effect of Changes in Plant Capacity and Operating Conditions on Plant Cost, Inventory, and Power Consumption. The effect of changes in plant size and operating conditions upon the plant, its cost, and thus the cost of power is of interest in determining the range for the most effective performance of a reactor type. Some plant facilities vary directly in size and cost with the total power output of the plant, while others are relatively insensitive to such factors. Equipment flowsheets and designs may change with changes in operating temperature and pressure.

Since the corrosion data indicate that the reactors can be operated at 300°C, it is important

TABLE 5. D_2O INVENTORY IN 450-Mw, TWO-REGION REACTOR

	VOLUME IN ONE REACTOR (liters)	
	Core System	Blanket System
Core and nozzles	3,900	
Blanket and nozzles		11,800
Heat exchanger*	6,800	3,400
Gas separator*	2,200	1,100
Pump*	700	350
Piping	5,300	4,450
Total	18,900	21,100
Total requirement for both systems	40,000 liters or 44 metric tons	

*Two required for core system.

TABLE 6. COST DATA FOR TWO-REGION REACTOR PLANT

ITEM	NUMBER	UNIT COST	TOTAL COST
High-Pressure System for One Reactor			
Reactor vessel	1	$ 270,000	$ 270,000
Gas separator	3	40,000	120,000
Heat exchanger	3	330,000	990,000
Fuel- and blanket-circulating pumps	3	140,000	420,000
High-pressure storage tank and catalytic recombiner for core system	1	110,000	110,000
High-pressure storage tank and catalytic recombiner for blanket system	1	43,000	43,000
20-Mw gas condenser	1	37,000	37,000
6.5-Mw gas condenser	1	15,000	15,000
Condensate storage tank	2	5,000	10,000
Gas blower for core system	1	30,000	30,000
Gas blower for blanket system	1	20,000	20,000
High-pressure process piping and valves			440,000
Steam piping, valves, and expansion joints in cells			28,000
Insulation			25,000
Instrumentation			80,000
Sampling equipment			10,000
Subtotal for one reactor			2,648,000
Subtotal for three reactors			7,944,000
Low-Pressure System for Three Reactors			
Dump tanks	6	59,000	354,000
Condenser for core system	1	45,000	45,000
Condenser for blanket system	1	22,000	22,000
Condensate tank	2	33,000	66,000
Catalytic recombiner	2	3,000	6,000
Evaporator	2	6,000	12,000
Feed and circulating pumps			75,000
D_2O recovery and fission-product adsorption system			90,000
Piping and valves			120,000
Instrumentation			70,000
Sampling equipment			12,000
Subtotal			872,000
Reactor Structure			
Reactor and low-pressure equipment cells			1,700,000
Crane			225,000
Equipment transport shield			200,000
Control room, laboratory, and process area			250,000
Cell ventilation system			290,000
Subtotal			2,665,000

TABLE 6 (continued)

ITEM	NUMBER	UNIT COST	TOTAL COST
Total Cost			
Direct cost			11,482,000
Contractor's overhead and fees (at 27%)			3,100,000
Engineering and inspection (at 10%)			1,148,000
Total			$ 15,730,000

to determine the effect of the higher temperature operation upon the design and the cost of the reactor plant. It is considered feasible to use the flowsheet shown in Fig. 5, with the reactor and steam temperatures raised by 50°C and the pressure in the high-pressure circulating system increased to approximately 2000 psia. Using this flowsheet, the high-pressure equipment would be of similar design but increased in section to withstand the higher pressure. There would be little or no change in the low-pressure equipment.

Operation at 300°C offers the additional very attractive possibility of eliminating the high-pressure recombiner systems and reducing the pressures by using homogeneous catalysts (55). Addition of 0.02 *M* copper sulfate to the core solution should be sufficient to recombine the deuterium and oxygen in solution at a total system pressure near 1600 psia (56). No equipment would be required for recombining gases in the high-pressure core system, and there would be very little possibility of explosive mixtures being formed. The loss of neutrons to copper would be negligible but the loss to xenon could be substantial unless equipment were provided for removing the xenon.

Very little work has been done to develop a similar homogeneous catalyst for the blanket system. Copper added to the slurry as copper sulfate precipitates on the thorium oxide and becomes relatively ineffective; however, there is a possibility that rhodium, palladium, or a similar solid catalyst will prove to be satisfactory. The amount of catalyst that would be required and the number of neutrons that would be lost to the catalyst are unknown. In the absence of such a catalyst for the blanket, there is still a reasonable possibility of reducing the pressure in the system since the volume of bubbles in the blanket can be increased substantially without having an important effect upon the operation of the reactor.

Costs were estimated for plants having one and six similar two-region reactors for comparison with results for the three-reactor plant. The variation of cost with plant size is shown in Fig. 14. A similar comparison for plants operating at 300°C is shown on the same figure.

If the plant is based upon the flowsheet of Fig. 5 and operated at a pressure of 2000 psia, the cost of the high-pressure equipment increases and the total plant cost is higher by about 20%. If the use of homogeneous catalysts permits complete removal of the high-pressure gas systems and operation at 1600 psia, there is no significant change in cost over the basic 250°C, 1000-psia plant. Operation at 1600 psia results in a 10% increase and removal of the gas systems in a 10% decrease in total plant cost.

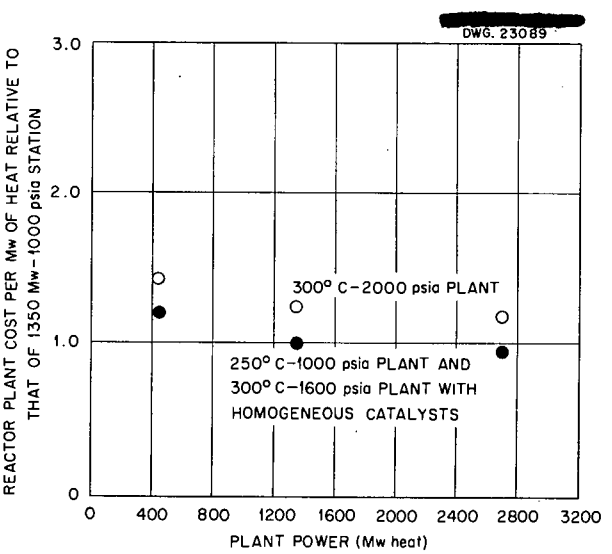

Fig. 14. Effect of Power and Operating Pressure on Cost of Two-Region Reactor Plant.

The basis used to estimate the D_2O and power requirements for the plants makes them essentially independent of the plant size or of operating pressure. If the other reactor characteristics remain unchanged and the plant size is altered by changing the number of reactors, the D_2O requirement remains 44 tons per reactor, and the electrical consumption 1600 kw per reactor. If use of internal catalysis makes possible the elimination of the gas separators and if flow studies indicate that the fluid velocities can be increased to, say, 40 fps in the core system and 25 fps in the blanket system, the D_2O requirement can be reduced to 36 tons per reactor. Further reduction in the D_2O requirement depends upon increasing the specific power in the core and the total power per reactor.

One-Region Reactor

Flowsheet. A flowsheet for a one-region aqueous homogeneous reactor using a slurry fuel in stainless steel equipment and operating at 1350 Mw thermal to produce approximately 300 net Mw of electricity is presented in Fig. 15. The uranium-plutonium or thorium-uranium fuel is pumped at 130,000 gpm through a 15- to 20-ft-dia core where the temperature is increased from 213 to 250°C. Slurry leaving the core flows through four large gas separators, where D_2 and O_2 are separated and diluted with He, O_2, and D_2O vapor, and then to eight 160-Mw heat exchangers. The slurry is cooled in the exchangers and returned to the reactor by eight 16,000-gpm, canned motor pumps.

Gas and entrained liquid from the separators pass through four parallel circuits into high-pressure storage tanks where the entrainment is removed to be returned to the reactor. The D_2 and O_2 are recombined on a platinized alumina catalyst, increasing the gas temperature to 464°C, and cooled in 17-Mw, tubular heat exchangers which condense 76 gpm of excess D_2O. The cooled gases are recirculated to the gas separators, and the condensate returns to the fuel through the rotor cavities of the pumps, the de-misters, and the high-pressure storage tanks.

Low-pressure equipment is provided for fuel feed and storage, D_2O recovery, and disposal of fission-product gases.

The slurry fuel is expected to contain 100 to 300 g/liter of uranium as either oxide or phosphate and thorium as either oxide or hydroxide suspended in D_2O. Gas-generation-rate estimates have been based on the use of UO_3 platelet slurry which has particles 1 μ thick, with other dimensions of 1 to 5 microns. The G_{D_2O} value was taken as 1.3 molecules of D_2O disintegrated per 100 ev of energy dissipated in the slurry, postulating that 80% of the fission fragments escape from the oxide particles. It is possible that much lower G values will be obtained in representative experiments and that the size of the gas system can thereby be reduced considerably.

Equipment. With the exception of the reactor vessel and the necessary changes in capacity, the equipment for the one-region reactor is similar to that described for the two-region reactor. Although designed principally for handling solutions, there is experimental evidence with uranium slurries which indicates that most of the equipment is readily adaptable to handling the more dilute slurries required for one-region reactors. Successful test results with such relatively dilute uranium slurries indicate that velocities as great as 25 fps are permissible in the process piping. Pumps for such flow rates require 800-hp motors.

Figure 16 is a conception of a typical one-region reactor vessel, consisting of a 15-ft-dia sphere with polar inlet and exit nozzles. A thermal shield reduces the heat generation in the pressure shell and also acts as a distributor for the fluid entering the sphere.

A 15-ft-dia sphere operated at 1000 psi and 250°C requires a 4½-in.-thick wall to keep the combined pressure and thermal stress below 15,000 psi. Carbon steel, clad with stainless steel, is specified as the material of construction for the vessel. The thermal shield may be stainless steel or stainless-clad carbon steel, depending on which would be the less costly. The weight of the vessel and thermal shield would be 150 tons, while 75 tons of slurry containing 200 g of uranium per liter would fill the vessel.

A 20-ft-dia vessel of similar construction would have a 6-in.-thick wall. The vessel and thermal shield would weigh 260 tons and the fuel weight would be 175 tons.

One-Region, 1350-Mw, Reactor Power Plant

Description of Plant. The 1350-Mw, one-region, power plant is shown in Figs. 17, 18, and 19. A reactor vessel is located in a central, shielded

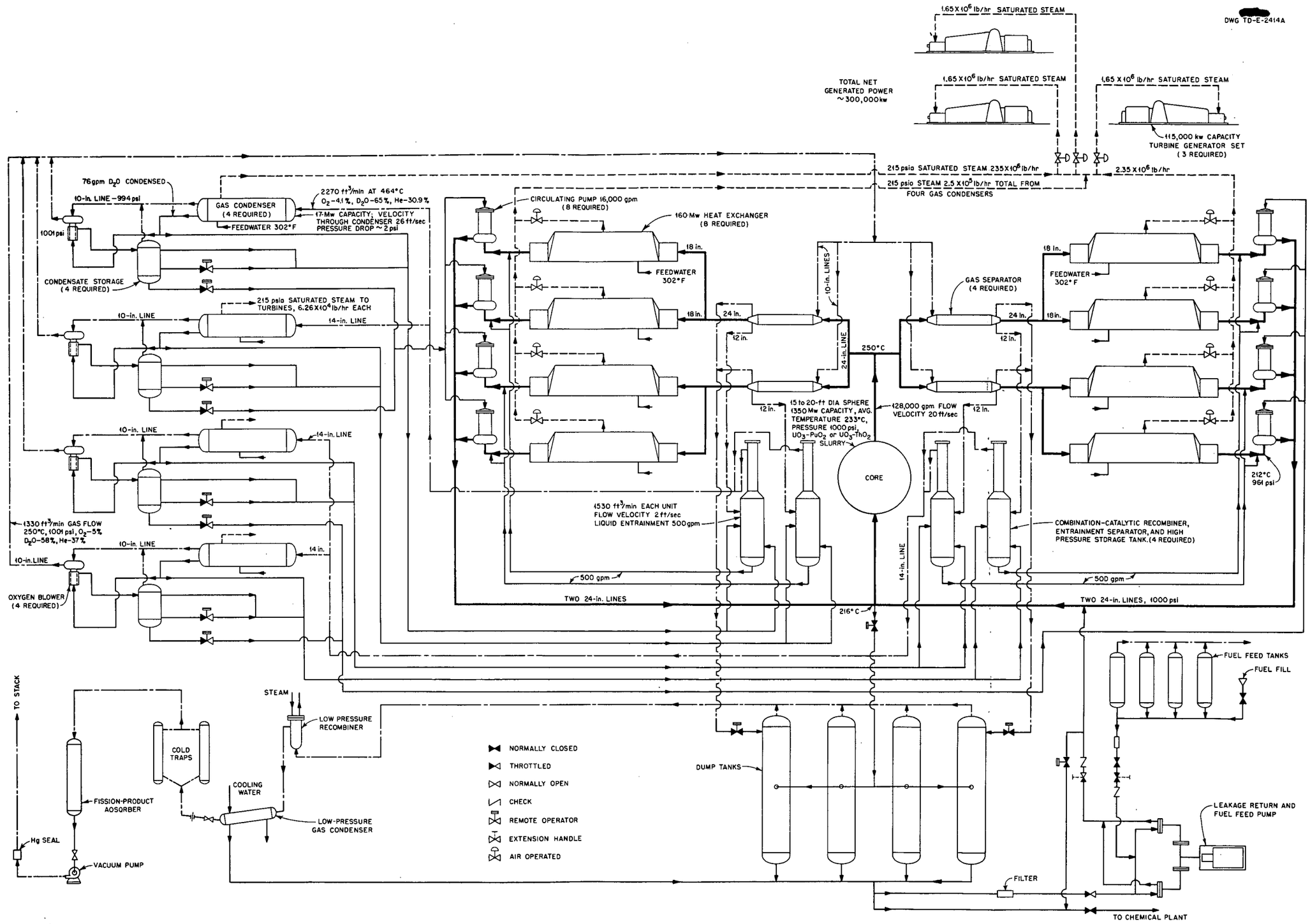

Fig. 15. Flowsheet for 1350-Mw, One-Region, Homogeneous Power Reactor.

[redacted]

[redacted]
DWG 23090

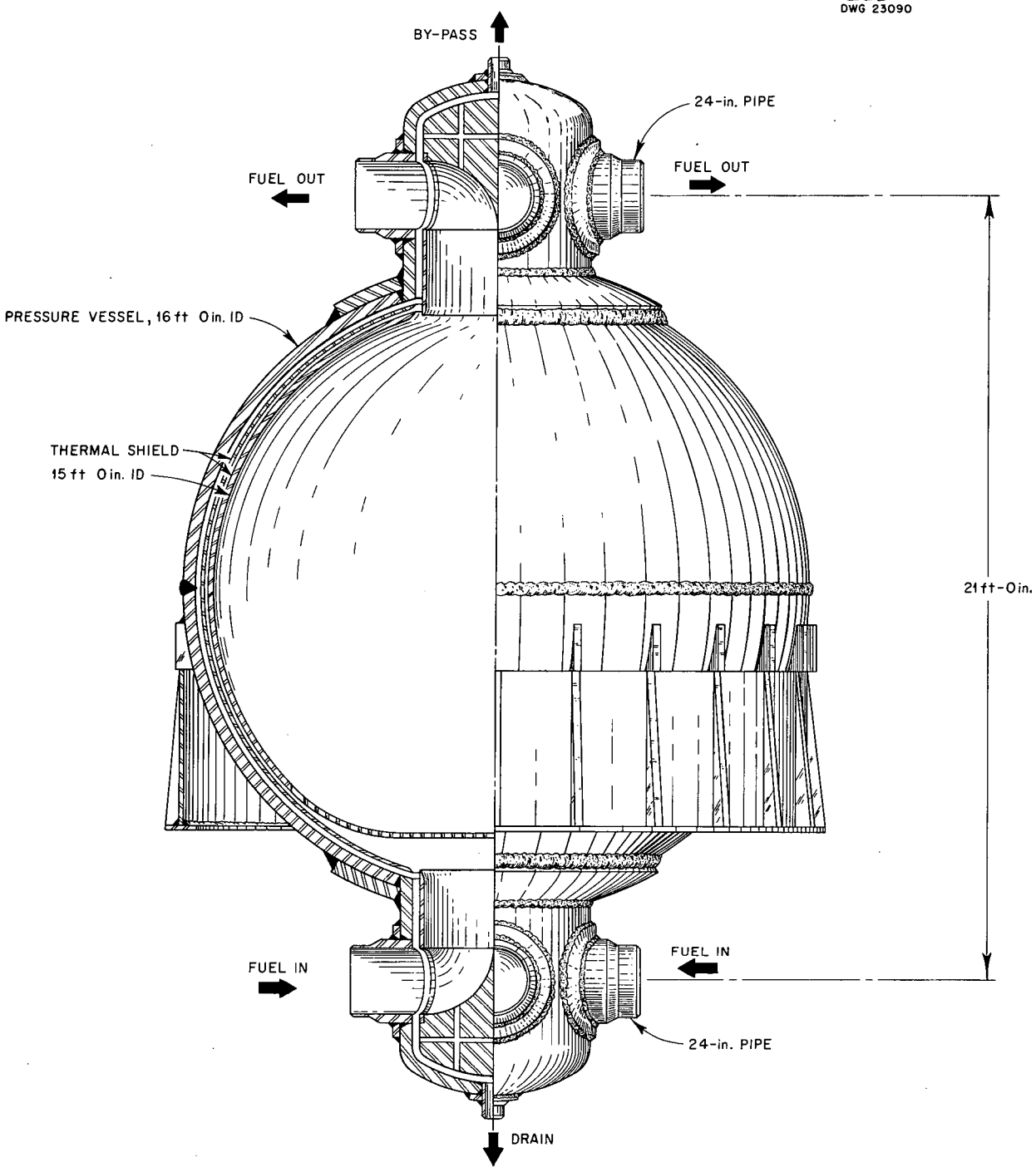

Fig. 16. One-Region Reactor Vessel.

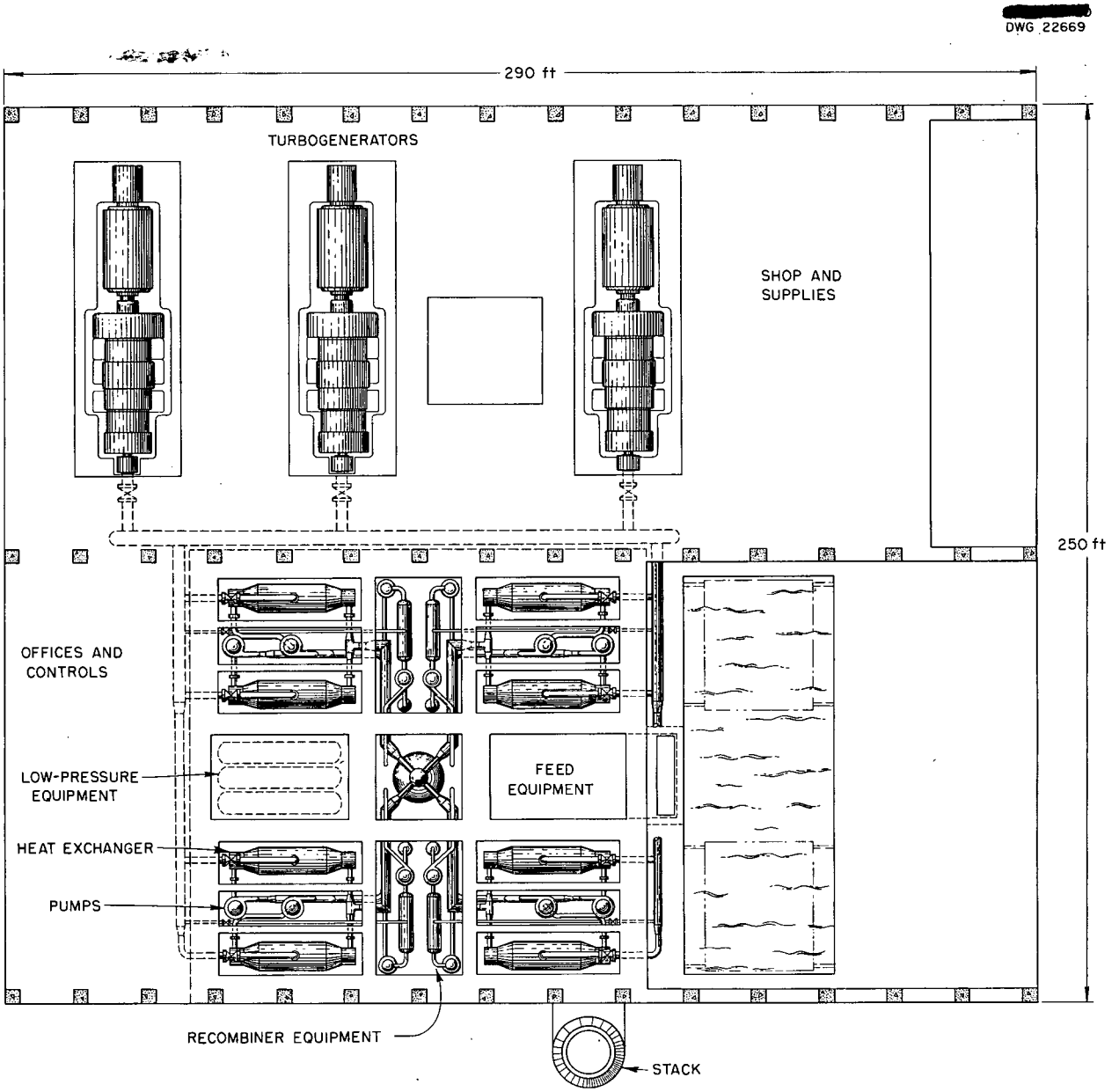

Fig. 17. Plan of One-Region Reactor Station.

compartment surrounded by compartments containing recombiner equipment, pumps, and heat exchangers. Equipment compartments are provided with only enough shielding to permit limited access when equipment is being replaced.

As compared with the two-region reactor plant, a different approach to the problem of disposal of radioactive equipment is illustrated here. (Either approach is equally applicable to one-region or two-region reactors.) Equipment which has been disconnected from the circulating system can be lowered into a canal under the reactor and removed to a pool outside the shield to be repaired. No attempt has been made to provide valves to isolate defective equipment. Rather, it is assumed that the entire reactor will be shut down for replacements or repairs in the high-pressure system. If satisfactory valves can be developed, they should be included to permit maintenance of some of the equipment while the reactor is operating.

As in the two-region reactor station, the equipment cells comprise the reactor building, and the turbogenerators are installed in the open. Only the shops, control rooms, stores, and other necessary facilities are housed.

D_2O Inventory. The distribution of D_2O inventory in one-region reactor plants with 15- and 20-ft-dia reactor vessels, each operating with a total heat output of 1350 Mw, is given in Table 7. With a 15-ft-dia reactor, the inventory is 139,000 liters or 153 metric tons, resulting in a specific power of 9.7 kw/liter or 8.8 Mw/ton and an inventory of $13,500,000 of D_2O. Increasing the reactor diameter to 20 ft increases the inventory to 214,000 liters, 236 metric tons costing $20,700,000, and reduces the specific power to 6.3 kw/liter or 5.7 Mw/ton. The specific power in the heat removal and circulation system is 16 kw/liter. The most

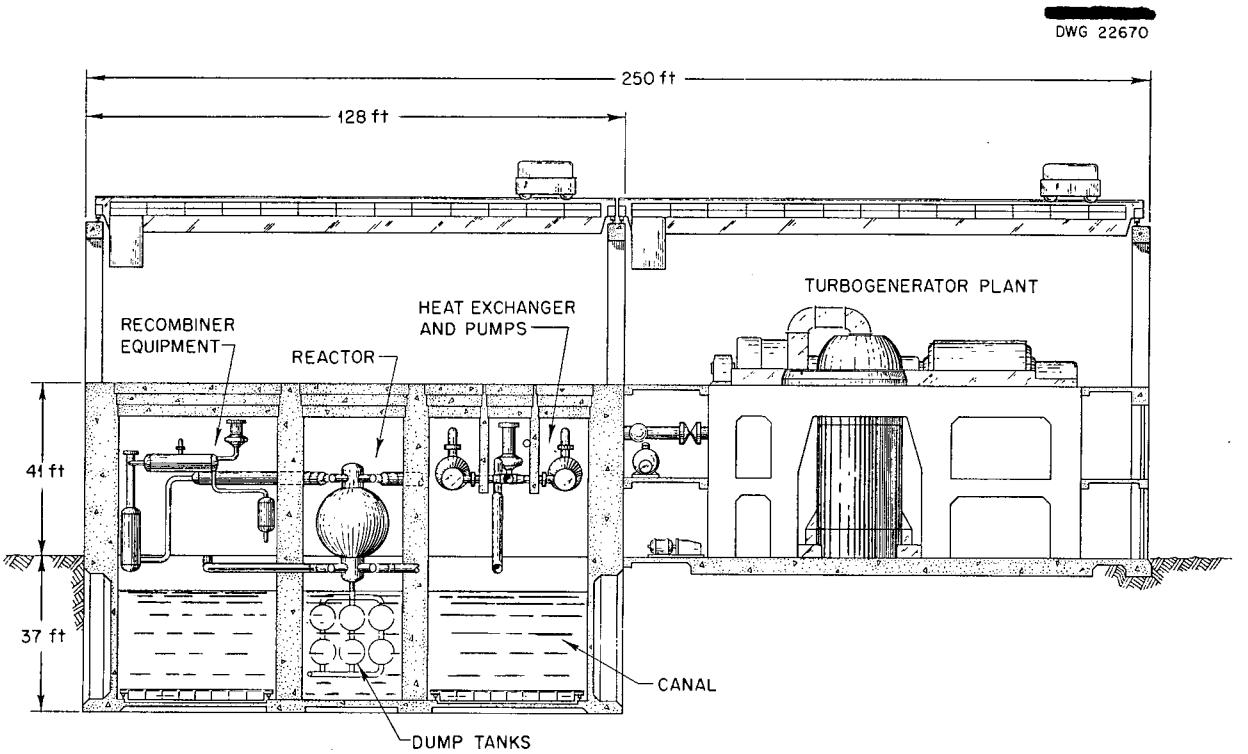

Fig. 18. Elevation of One-Region Reactor Station.

TABLE 7. D_2O INVENTORY IN 1350-Mw, ONE-REGION REACTOR

	VOLUME WITH 15-ft-dia REACTOR (liters)	VOLUME WITH 20-ft-dia REACTOR (liters)
Reactor vessel and nozzles	55,000	130,000
Heat exchangers (8)	28,600	28,600
Gas separators (4)	8,700	8,700
Pumps (8)	2,800	2,800
Piping	44,000	44,000
Total, liters	139,100	214,100
metric tons	153	236

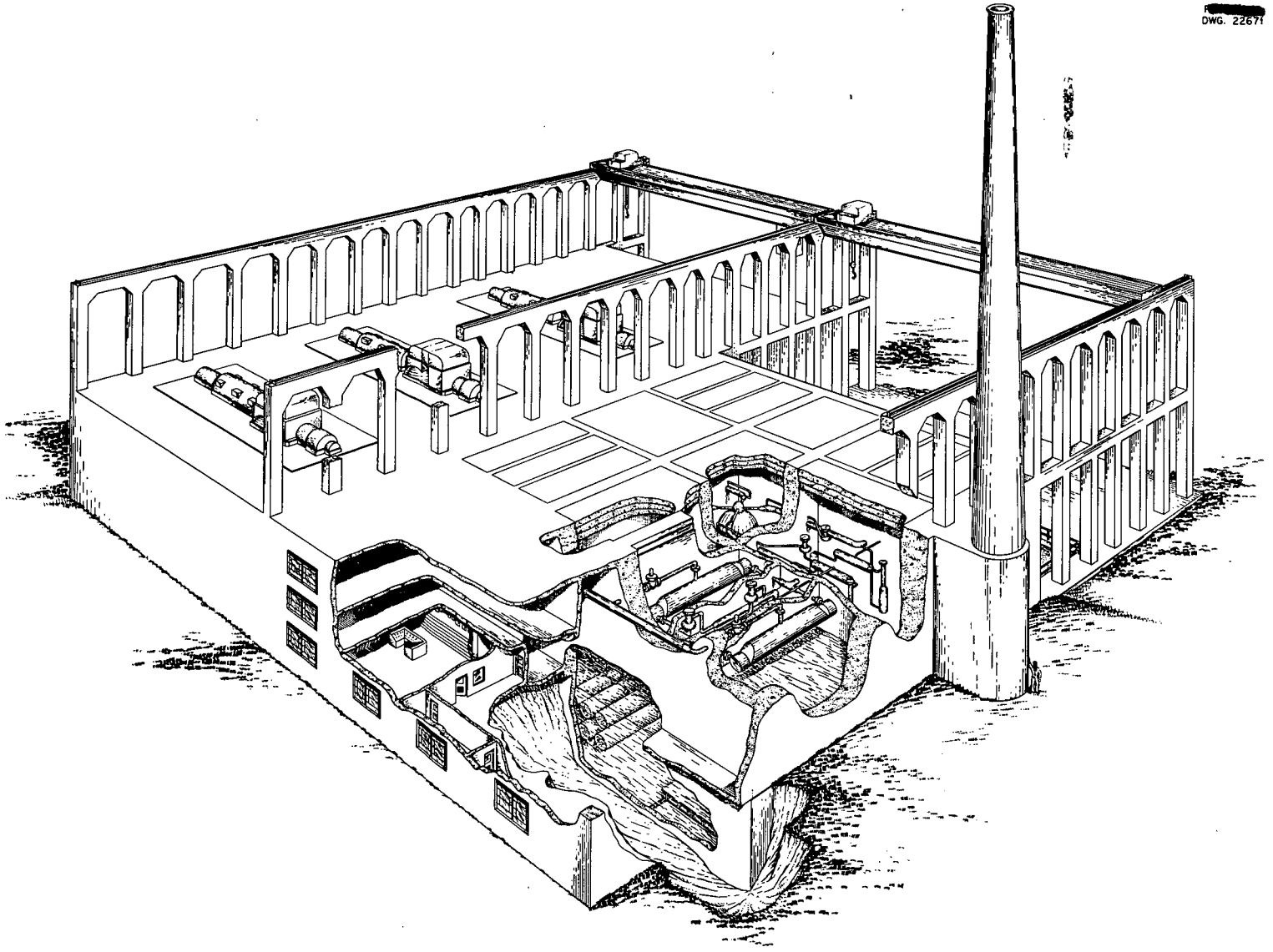

Fig. 19. One-Region Reactor Station.

economical reactor diameter is obtained by balancing the gain in neutron utilization achieved by increasing the reactor size against the increased D_2O inventory charge.

Power Consumption. A total of 4750 kw is required to operate the main circulating pumps for the one-region reactor. The increase over the requirements for the two-region reactors results from pumping a fuel of greater density. An additional 750 kw is required for auxiliaries in the reactor plant, increasing the total consumption to 5500 kw.

Cost of Reactor Plant. The cost analysis for the one-region reactor plant given in Table 8 shows a total cost of $14,986,000 or $11 per kilowatt of heat-production capacity. The accuracy of the estimate must be considered to be about the same as that suggested for the two-region reactor plant. The most probable cost should be in the range of $14,000,000 to $19,000,000, or $10+ to $14 per kilowatt of heat-generation capacity.

The cost estimate was based upon the use of a 15-ft-dia reactor vessel. Increasing the diameter to 20 ft would be expected to increase the cost by about $600,000.

Effect of Changes in Plant Capacity and Operating Conditions on Plant Cost, Inventory, and Power Consumption. Changes in capacity of the one-region reactor plant are achieved by adding or subtracting heat removal equipment. The estimates of the effects of plant capacity, operation at 300°C and 2000 psia, and operation at 300°C and 1600 psia with homogeneous catalysts upon cost relative to that of the basic 1350-Mw plant are shown in Fig. 20. The feasibility of fabricating 15- and 20-ft-dia vessels for 2000-psia service has not been established. Homogeneous catalysts for slurry reactors remain to be developed. There is almost no basis for estimating the cost of titanium-lined carbon steel equipment for handling solutions. Although the titanium-lined equipment may be more expensive than stainless steel equipment, the effect upon the total plant cost could be small when the technology is developed.

Since the holdup in the reactor remains constant as the heat removal equipment is changed, the D_2O requirements of one-region reactors vary considerably with total power. The effect of plant capacity upon specific power is shown in Fig. 21. Included is the more optimistic effect of eliminating the gas separators and increasing the flow

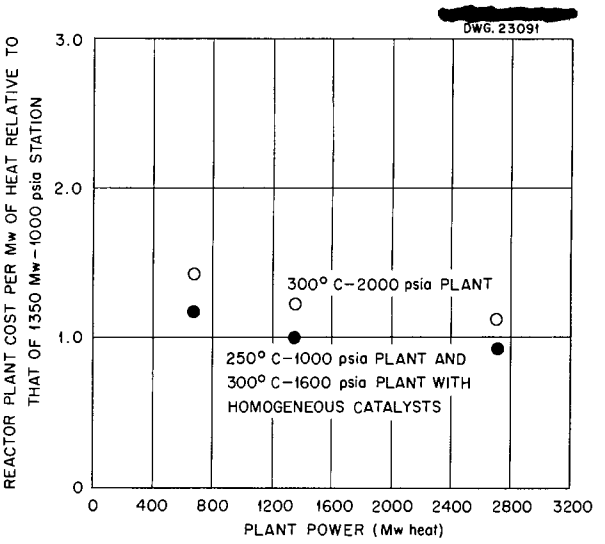

Fig. 20. Effect of Power and Operating Pressure on Cost of One-Region Reactor Plant.

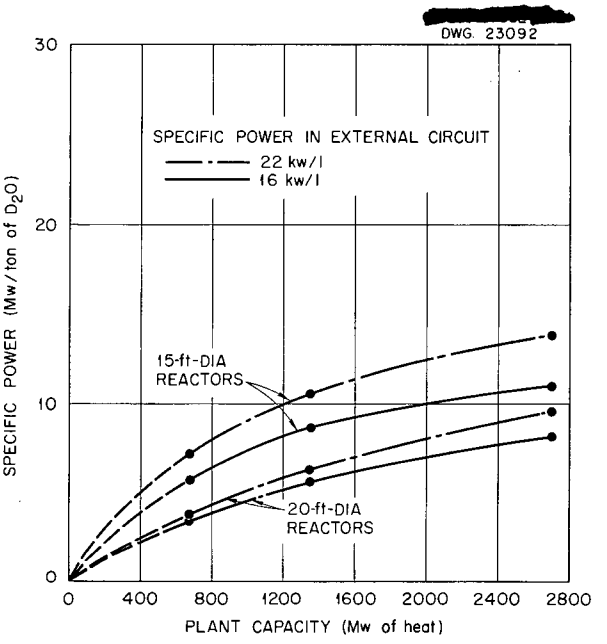

Fig. 21. Effect of Plant Capacity on Specific Power in D_2O.

rates, assuming the use of heterogeneous catalysts. These changes increase the specific power in the heat removal system from 16 to 22 kw/liter.

Power consumption is almost directly proportional to the power output of the plant in the range of sizes of interest here. Under the conditions

TABLE 8. COST DATA FOR ONE-REGION REACTOR PLANT

ITEM	NUMBER	UNIT COST	TOTAL COST
High-Pressure System			
Reactor vessel	1	$ 683,000	$ 683,000
Gas separator	4	60,000	240,000
Heat exchanger	8	350,000	2,800,000
Fuel-circulating pump	8	150,000	1,200,000
High-pressure storage tank and catalytic recombiner	4	110,000	440,000
Gas condenser	4	32,000	128,000
Condensate storage tank	4	5,000	20,000
Gas blower	4	30,000	120,000
High-pressure process piping and valves			1,142,000
Steam piping, valves, and expansion joints in cells			220,000
Insulation (foam glass)			70,000
Instrumentation			120,000
Sampling equipment			8,000
Subtotal			7,191,000
Low-Pressure System			
Dump tanks	6	59,000	354,000
Condenser	1	50,000	50,000
Condensate tank	2	33,000	66,000
Catalytic recombiner	1	6,000	6,000
Evaporator	2	6,000	12,000
Feed and circulating pumps			50,000
D_2O recovery and fission-product adsorption system			90,000
Piping and valves			120,000
Instrumentation			70,000
Sampling equipment			9,000
Subtotal			827,000
Reactor Structure			
Reactor and low-pressure equipment cells			2,156,000
Crane (150-ton – 120-ft span)			225,000
Control room, laboratory, and process area			250,000
Cell ventilation system			290,000
Subtotal			2,921,000
Total Cost			
Direct cost			10,939,000
Contractor's overhead and fees (at 27%)			2,953,530
Engineering and inspection (at 10%)			1,093,900
Total			~ $ 14,986,000

specified in the design it amounts to 4.1×10^{-3} kwhr of electricity per kwhr of heat produced.

Reactor Operation and Control

Current conceptions of aqueous homogeneous reactors rely for control completely on such "internal" means as variable fuel concentration and reactivity temperature coefficient rather than "external" means such as poison-containing control rods. Shim control to compensate for fission-product poisons, to change the operating temperature, and to put the reactor into operation is accomplished by adjusting the core fuel concentration. The variation of operating temperature with fuel concentration for a clean reactor is shown in Fig. 22.

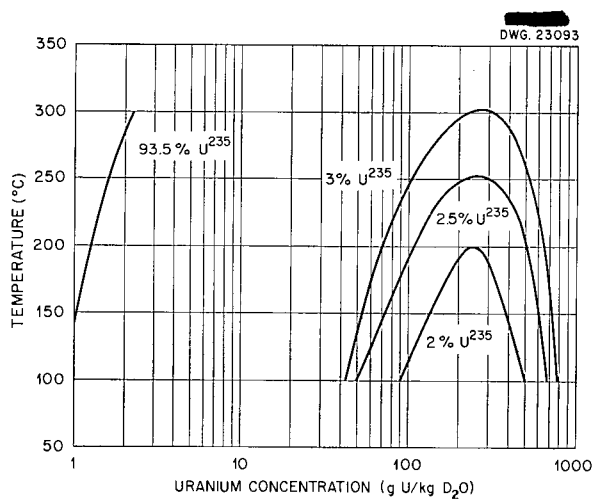

Fig. 22. Typical Curves Relating Temperature, Enrichment, and Critical Concentration of Uranium for Aqueous Homogeneous Reactors. Example is 6-ft-dia, D_2O moderated, one-region reactor.

Both the highly enriched and slightly enriched reactors can be started by filling the circulating systems with D_2O and adding concentrated fuel until the reactor becomes critical. By adding more fuel, the temperature can be increased to the desired operating level. In the case of highly enriched reactors, the temperature level is maintained by adding additional fuel as required to compensate for burnup and poisons.

With slightly enriched fuels there is a minimum enrichment which is critical at any specified operating temperature. In order to increase the conversion ratio by taking advantage of the resulting increased resonance absorption, it is sometimes advantageous to operate at a fuel concentration greater than that corresponding to the minimum enrichment which can be critical in a reactor of given diameter. The desired operating point can be achieved by using fuel of the proper enrichment and permitting the temperature to increase at low power above the maximum indicated by the curve in Fig. 22 so that very little excess pressure is required to control the gas volumes. It can also be reached by operating the reactor at full power as soon as the desired temperature is attained at low concentration, with subsequent controlled addition of fuel and removal of fission products until the proper concentration is achieved. Approaching the desired concentration by adding highly concentrated fuel to the reactor and diluting to make it critical may be a logical procedure with some types of fuels.

Dependence is placed upon the negative temperature coefficient of reactivity to meet the regulation and safety requirements of the reactor. The temperature coefficient varies from -3×10^{-3} $\Delta k/k$ per °C for the bare core of a two-region reactor to -1.0×10^{-3} $\Delta k/k$ per °C for the large single-region systems. As there appears to be no good reason to require that the short-time variations in power about the average be kept below several per cent, the regulation is achieved with ease.

There seems to be little question that the temperature coefficient is sufficiently large and certain in the aqueous homogeneous reactors to limit any foreseeable power excursion. The major question is whether reactivity changes can occur which are so rapid and of such magnitude that destructive pressures are generated by shock waves or by expanding fluid as it is ejected from the reactor after being heated in the resulting power surge. In ORNL-1096, it was shown that plutonium production reactors could be so designed that the maximum foreseeable rapid change in reactivity would not exceed the effect of the delayed neutrons. Under such circumstances no important power surges could occur. This same standard can be applied to single-region power producers using uranium-plutonium fuels. However, the much smaller fraction of delayed neutrons in the U^{233} system – 0.25% for U^{233} vs 0.75% for U^{235} – and the small fraction of the delayed neutrons emitted in the core of two-region reactors – 20% or less of the total – result in

severe design and operating restrictions being imposed upon these types of reactors if they are to meet the same standards. A more sophisticated analysis is required to provide standards which can be met in a practical power-producing reactor.

Previous calculations of power and pressure surges have been predicated on instantaneous changes in reactivity. Efforts are being made to modify the methods so that the effects of disturbances in reactivity which occur over short times can be examined. No results have yet been obtained which would help to set standards for the reactors that are Th-U^{233} fueled. There are indications that major pressure surges cannot occur if changes in reactivity equivalent to replacement of the gas bubbles in the core with fuel – the largest assumed disturbance – take place over a period of a few hundredths of a second. Examination of various reactor conceptions has failed to reveal ways by which important reactivity changes could be introduced in such short times. Until better calculations are available it must be assumed that the thorium-fueled reactors possess the inherent nuclear safety required for large-scale power reactors.

Experience with the HRE is evidence of the validity of this assumption. That reactor has been operated at average specific powers as high as 30 kw/liter with no evidence of nuclear instability. It has been started and the temperature level raised by control of the uranium concentration; the power level has been adjusted and controlled routinely by controlling the steam demand of the turbogenerator; the normal shutdown is accomplished by diluting the fuel or dumping it to subcritical tanks. The response of the reactor to changes in power demand is smooth and certain. In kinetics experiments, the reactivity of the reactor was increased by 0.8% in 1 sec, resulting in a reactivity 0.3% greater than that required to become prompt critical. The reactor power increased from 30 watts to 10,000 kw in 1 sec and then decreased to a steady power of 1500 kw in 0.1 second. The power rise was limited by the large, negative power coefficient of the reactor. In all the kinetics experiments it has been possible to predict with good accuracy the rates of reactivity increase which could be obtained by varying the operating conditions and the resulting changes in power level with time. The success achieved in predicting the performance of the HRE leads to the expectation that equally good methods can be developed for the larger reactors.

Nuclear Calculations

Nuclear calculations for each system were based on the two-group diffusion theory (28). Throughout, spherical geometry was postulated, thus neglecting the effects of the inlet and discharge pipes. For the two-region systems, the neutron absorption by the core tank was taken into account by an appropriate boundary condition on the slow-neutron current at the core-blanket interface.

For the one-region reactors, preliminary calculations indicated that only a small net effect was produced by the gas bubbles in the core and reflector savings caused by the reactor pressure vessel. Accordingly, no correction was made for either effect.

The cores of two-region reactors were postulated to contain equilibrium concentrations of higher isotopes resulting from a long-term operation during which heavy elements are not removed from the core. For the thorium cycle, the concentrations of U^{234}, U^{235}, and U^{236} were calculated on the basis of pure U^{233} fed into the core. For the plutonium cycle, the core feed was postulated to be pure Pu^{239}, and the concentrations of Pu^{240} and Pu^{241} were calculated on this basis. In each case the physical properties of the core material were adjusted to take into account a 3% reduction of average core density by gas bubbles.

In the blankets containing thorium, the concentrations of Pa and U were fixed by the chemical processing rates and the average flux. In the uranium blankets the isotopic ratios were affected by chemical processing and re-enrichment rates. The resonance-neutron absorption in blankets with a high concentration of thorium oxide slurry was computed by multiplying the fast-group slowing-down distribution by the resonance capture probability (29). Otherwise, the calculations on the blanket were straightforward (28, 30).

One-region reactor calculations also included the effects of higher isotopes. In the thorium-fueled reactors, chemical processing determined isotopic ratios. In the uranium-fueled reactors, concentrations of uranium isotopes were controlled by a re-enrichment cycle.

The constants used in the nuclear calculations are listed in Table 9. Most of the cross sections

TABLE 9. CONSTANTS USED IN TWO-GROUP CALCULATIONS

THERMAL CROSS SECTIONS AT 250°C (barns)

	Absorption	Activation	Fission
Th^{232}	5.2	5.2	0
Pa^{233}	100	100	0
U^{233}	443	40	403
U^{234}	60	60	0
U^{235}	478	75	403
U^{236}	6	6	0
U^{238}	2.07	2.07	0
Pu^{239}	1130	395	735
Pu^{240}	400	400	0
Pu^{241}	1125	300	825

CONSTANTS FOR D_2O

	20°C	250°C
Density, g/cm^3	1.105	0.876
Diffusion length squared, cm^2	1.35×10^4	3.05×10^4
Age, cm^2	120	190
Absorption cross section, cm^{-1}	7.07×10^{-5}	4.20×10^{-5}
Slow-diffusion coefficient, cm	0.84	1.14
Fast-diffusion coefficient, cm	1.30	1.66

HALF LIVES (days)

Pa^{233}	27.4
Np^{239}	2.3

OTHER CONSTANTS AT 250°C

	ν, neutrons/fission	η, neutrons/absorption
U^{233}	2.53	2.30
U^{235}	2.48	2.09
Pu^{239}	2.91	1.75
Pu^{241}	2.5 to 3.3	1.9 to 2.4

were obtained from publications of the AEC Neutron Cross Section Advisory Group (*31, 32, 33, 34, 35, 36, 37*). The cross sections listed are for an energy of 0.045 ev, which corresponds to the most probable velocity in a Maxwell distribution at 250°C. In the case of U^{235} and Pu^{239}, corrections were made for "non-$1/v$" absorption to obtain the effective 0.045-ev cross section in a Maxwell distribution at 250°C. This correction is quite large for Pu^{239}, accounting for the low value of η employed.

The properties of the moderator at 250°C were obtained from those at 20°C by the usual density corrections and allowance for $1/v$ variation of the absorption. The absorption cross section of D_2O was calculated from the diffusion length and diffusion coefficient.

Complete details of the nuclear calculations will be published in ORNL CF-53-12-1 (*38*).

TURBOGENERATOR PLANT

Steam Cycle

Because heat from the reactor is furnished to the turbines by means of relatively low-temperature steam, the thermodynamic power cycle for such a nuclear power plant is necessarily different from the cycles used in conventional central stations. The cycle should have as great a thermal efficiency as economically practical while avoiding more than 12% moisture in the last stages of the turbine. These two requirements suggest the cycle shown in Fig. 23, using 215-psia saturated steam to the turbine throttle with subsequent reheat at a pressure such that the amount of moisture in the turbine exhaust is acceptable. The reheat is accomplished by condensing throttle steam in a heat exchanger. The influence of a 40°F terminal temperature difference and of a 10% pressure drop in the turbine steam was taken into consideration. The number of stages of regeneration feed-water heating after the first stage or two is largely a function of the cost of steam to the turbine, as well as the saturation temperature of the throttle steam. Arbitrarily, three stages were used in this analysis, with a 5°F terminal temperature difference considered in the closed heaters. No effort was made to take into account pressure drop in the turbine extraction steam lines.

The efficiency of the 215-psia plant and the effect upon efficiency of increasing the saturated steam temperature and pressure are shown in Fig. 24. Turbogenerator sizes range from 118 Mw at 215 psia to 141 Mw at 600 psia. Turbines operated at 1800 rpm were used because their size was larger and hence their steam flow capacity larger than those of the 3600-rpm units. Even with these slower speed turbines, three of the largest turbine exhaust ends presently available are required to pass the steam necessary to achieve the above outputs. Curves are presented for gross plant efficiency, for net power-plant efficiency assuming that 6% of the power is consumed in operating auxiliaries, and for net station efficiency which includes the power consumed in operating the reactors.

Although a reheat cycle was chosen for this analysis, similar results could be obtained, at least with low-pressure steam, by removing moisture at several stages in the turbine. Analyses which were made for both types of cycle based upon 215-psia saturated steam showed no significant differences in cycle efficiencies or turbine costs.

Plant Cost

Data from Fig. 1, ORNL-1387 (*39*) were used as a basis for estimating the dollars-per-kilowatt cost of the turbogenerator plant. Those figures were based upon the cost of the Johnsonville steam plant of the TVA and include all the steam-plant cost except for such parts as the boiler, coal and ash handling equipment, etc. which can be replaced by a reactor. The following modifications were made for inclusion in this report.

1. Costs were multiplied by 1.078, a value obtained from the *Engineering News-Record*, to reflect the changes in construction costs since 1951.
2. The basis was changed from a plant in which an increasing number of turbines of similar physical size, but lower capacity, are used to a plant in which the turbogenerator capacity is maintained constant, and the physical size is increased to achieve a fluid plant output as the steam temperature and pressure are reduced. A plant with three 125-Mw turbogenerators was considered for all operating conditions. The change results in important reductions in turbogenerator, condenser, feed-water equipment, accessory electrical equipment, and building costs for the low-pressure plants.
3. Costs for low-pressure plants employing saturated steam and the reheat cycle were included.

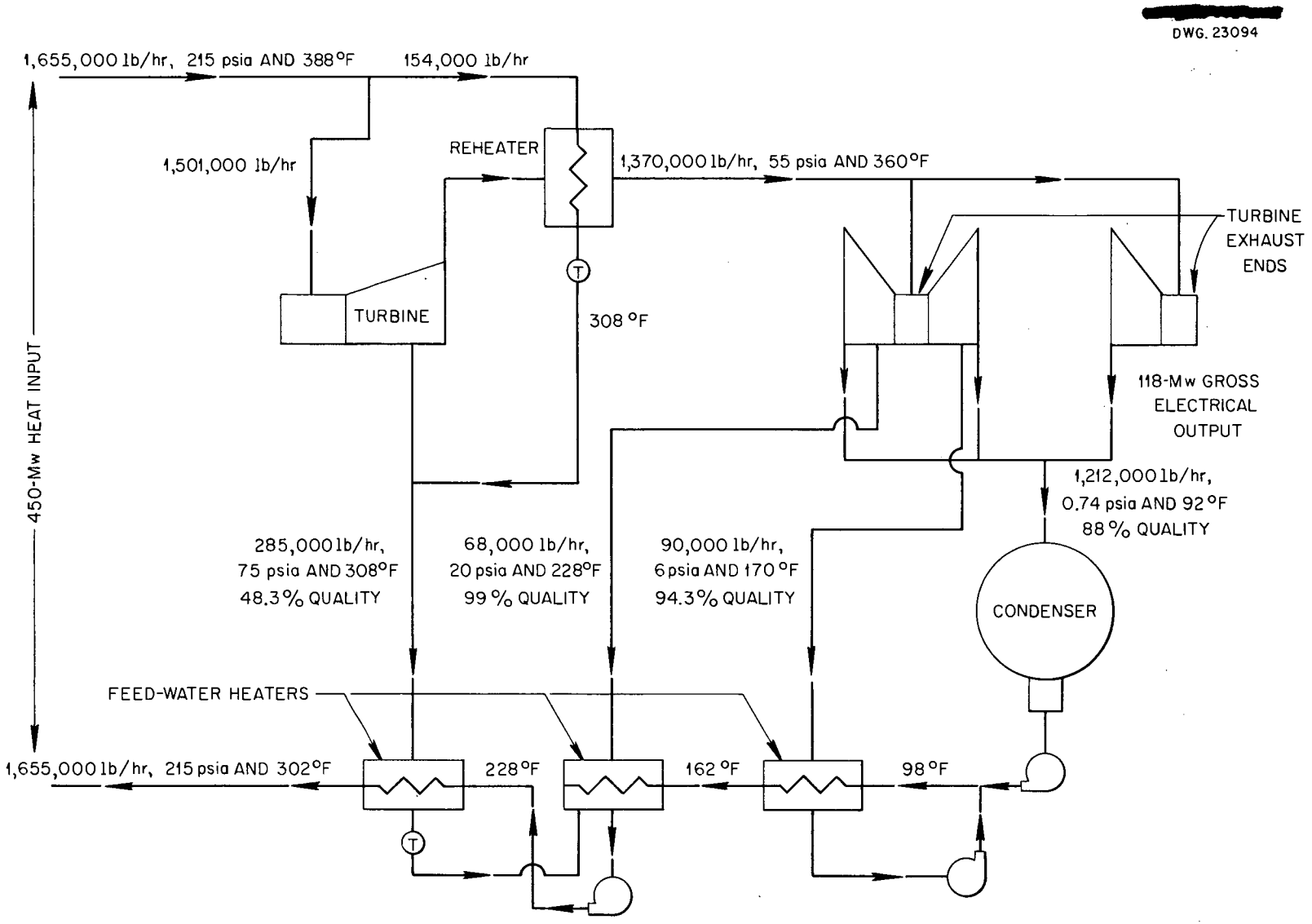

Fig. 23. Steam Cycle for 215-psia Turbogenerator.

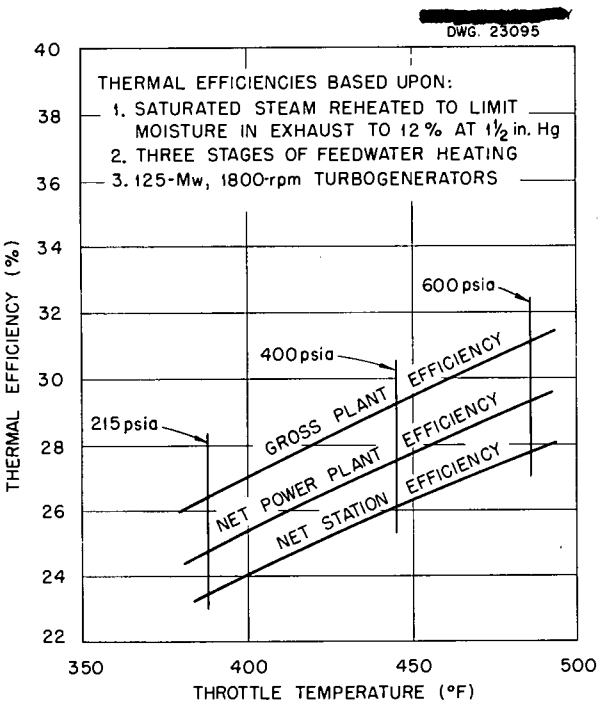

Fig. 24. Effect of Steam Conditions on Turbogenerator Plant Efficiency.

For low-pressure plants, there is no evident difference in cost, whether operating with saturated steam (215 psia and 388°F) or superheated steam (100 psia and 388°F), provided that the moisture in the turbine exhaust and the maximum temperature are kept the same. The added efficiency of the reheat cycle compensates for the greater cost of equipment. The reheat cycle is preferred because the better efficiency results in the production of more electricity for a given reactor cost and fuel consumption.

The modified cost curves are presented in Fig. 25. They include the cost of the entire power plant except the reactor, steam generating equipment, and the added facilities required for reactor operation which are included in the section "Cost of Reactor Plant." Turbogenerators are housed in the Johnsonville plant and the cost is included in these data. If the turbogenerators are installed outdoors, there would be a savings of approximately $6.50 per kilowatt of capability.

An estimate of the effect of plant capacity upon cost is shown in Fig. 26. Although the figures were calculated for the 215-psia plant, they are believed to depend only slightly upon operating conditions.

CHEMICAL PROCESSING OF REACTOR FUELS

Status of Chemical Processing

One of the major advantages cited for fluid fuels is that the elimination of fabricated fuel elements simplifies the problems of chemical processing and makes possible rapid, cheap, and continuous processing of the fuel for removal of fission products and excess fissionable materials. Recently some steps have been taken in the direction of developing simple methods for handling aqueous homogeneous fuels. However, at the present time the status of most of the more advanced processes is such that most cost analyses must be based upon conventional solvent-extraction schemes.

Chemical processes are required as indicated for the following operations:

1. The two-region Th-U^{233} reactor requires that the fission products be separated from the circulating core solution and that the U^{233}, Pa^{233}, and fission products be separated from the thorium in the blanket.
2. The one-region Th-U^{233} reactor requires separation of fission products from the core and removal of excess U^{233}.
3. Separation of Pu and fission products from the uranium in the blanket and decontamination of the Pu in the core are required for the U-Pu, two-region reactors.
4. Methods for partial decontamination of fuel without separating the plutonium and for completed decontamination with plutonium separation are required for U-Pu reactors.
5. Methods for D_2O recovery are important for any chemical process which requires the fuel to be in H_2O solutions.

The Purex process for separating plutonium, uranium, and fission-product poisons is a solvent-extraction method whose development has progressed successfully through the pilot-plant stage at Oak Ridge National Laboratory. The pilot plant has dissolved and processed irradiated Hanford slugs which have been cooled for as little as 60 days (*40*). A modification of the Purex process has been employed at Oak Ridge for the recovery of uranium and plutonium in waste material (*41*). It meets the requirements for decontaminating fuel from the one-region and the two-region U-Pu reactors and the core solution from the two-region

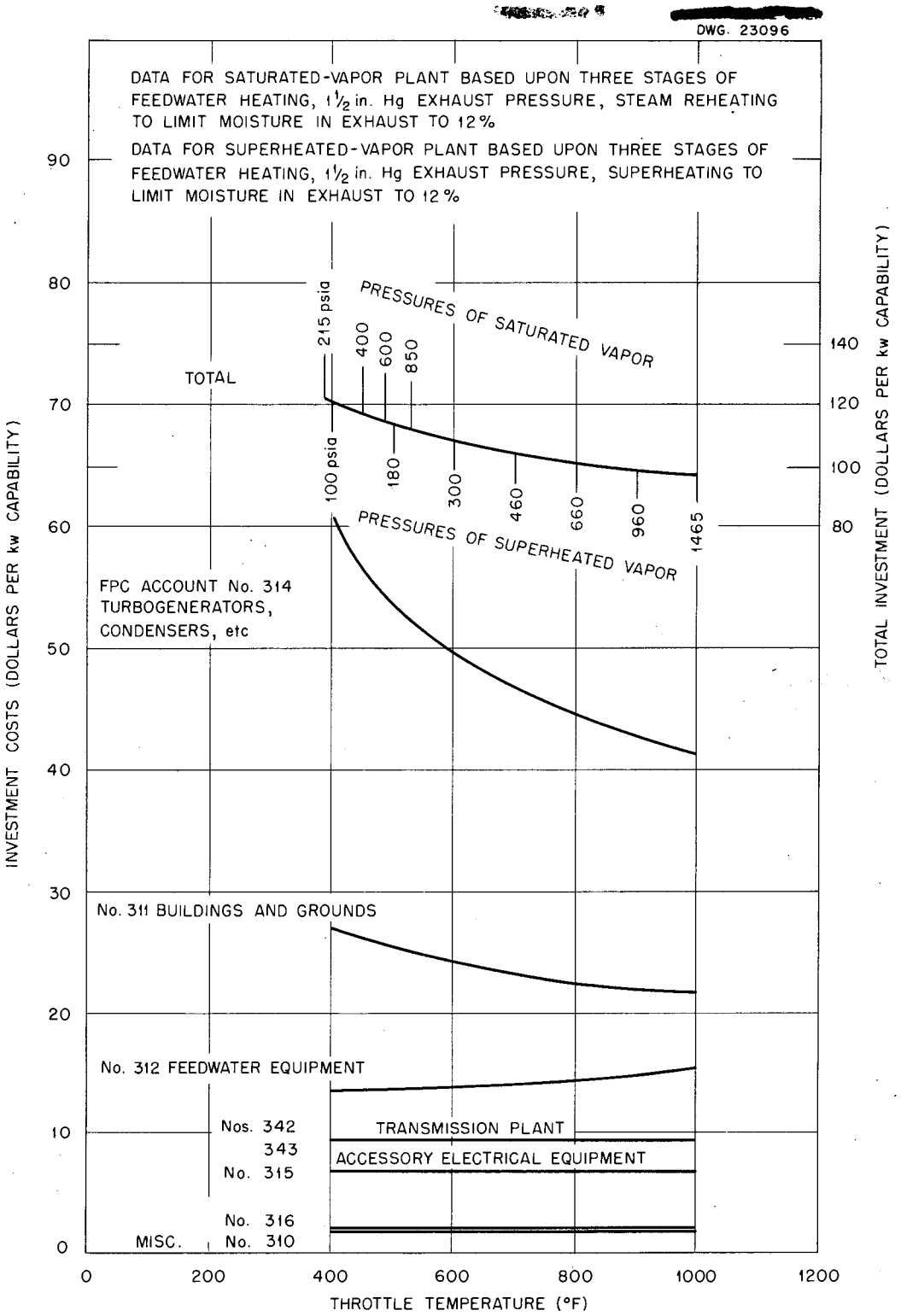

Fig. 25. Effect of Steam Conditions on Power-Plant Cost for 300-Mw Plant.

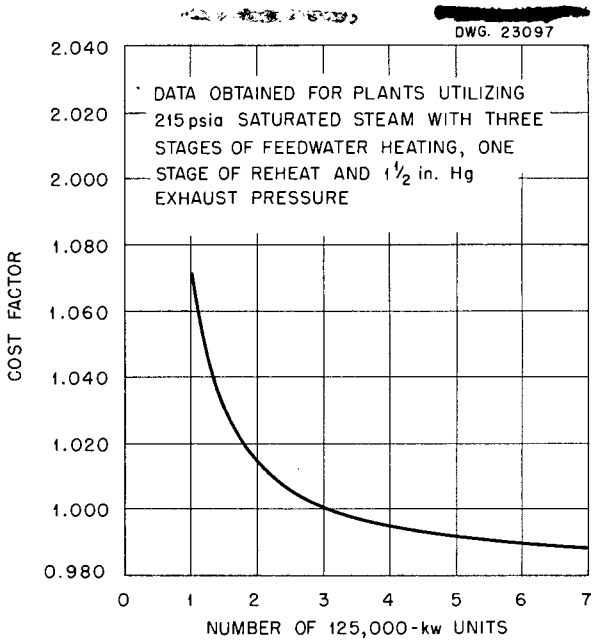

Fig. 26. Effect of Power-Plant Size on Cost.

Th-U^{233} reactor. Because of the large solution volumes, the exchange of deuterium with hydrogen in the organic solvents, and the expense of obtaining deuterated reagents, economical processing can be done only in H_2O solutions.

The very low solubility of plutonium in uranyl sulfate solutions containing no excess acid suggests that plutonium could be removed by filtration from a uranyl sulfate blanket of a two-region U-Pu reactor.

For the separation of thorium, uranium, and fission products, development has been initiated on Thorex (*42*), a solvent-extraction process similar to Purex. The unit operations have been demonstrated and a pilot plant is being constructed. Thorex processing in H_2O meets the requirements both for the fuel from the one-region thorium breeder and for the core and blanket of the two-region breeder.

It has been experimentally demonstrated, both by the Vitro Corporation and by the Oak Ridge National Laboratory (*43, 44*), that calcium fluoride, calcium sulfate, and similar inorganic media have the ability to remove, by adsorption, metathesis, or filtration, a portion of the fission products from aqueous uranyl sulfate solutions. Although additional information must be obtained before a detailed process equipment design can be made, adsorption methods appear to be attractive for the partial decontamination of the core solution from a two-region thorium breeder. A major advantage of this process is that it can be carried out in D_2O solutions with relatively low holdup of critical materials. No similar process has yet been suggested to be feasible for separating fission products from plutonium solutions in aqueous homogeneous reactors.

Laboratory experiments have also been conducted to determine the feasibility of removing the fission-product poisons from the uranium solution through the use of ion-exchange resins. Because this process suffers from radiation damage to the exchange media, loss of uranium from solution, and loss or dilution of D_2O through exchange with the media, development on it has been discontinued. At present, the D_2O losses appear to be the major deterrent to further effort.

In connection with ion exchange, very preliminary investigations have been made to determine the possibility of removing fission products by electrolysis. A few of the fission products were removed in this manner in the laboratory. This process appears to be applicable only in connection with another process designed to remove the bulk of the poisons.

Recently, preliminary experiments have been initated at Oak Ridge National Laboratory to investigate the possibility of removing uranium from thorium–uranium oxide slurry particles without destroying the slurry. Laboratory work indicates that in the presence of carbon dioxide and 0.5 *M* sodium fluoride or lithium fluoride at 250°C, essentially all the uranium is removed from slurry particles (*43, 45*). The slurry particles are apparently unchanged; however, there is a possibility that their abrasiveness may be greatly increased by such a treatment. Investigation of this is being continued.

The problem of D_2O recovery from fuel solutions has been investigated by the Vitro Corporation (*46*). The moisture content of samples of uranyl sulfate solution and uranium oxide slurry was successfully reduced to less than 0.1% in tray dryers. A few problems involving SO_3-D_2O mist collectors and fission-product carry-over still remain to be solved.

The preparation of uranyl sulfate from uranium hexafluoride for use as reactor feed solution has also been investigated by the Vitro Corporation

(47). Seven chemically feasible processes have been suggested, varying in complexity from direct reaction of the uranium hexafluoride with sulfuric acid to the formation of intermediate ammonium compounds. Production of slurries and of alternate solutions is either in a preliminary development stage or well enough understood to be included in the fuel purification processes.

Selection of Processes for Power Reactors

The following processes will be used in this study of power production economics:

1. Calcium fluoride adsorption methods will be used for processing the core of the two-region breeder to remove the bulk of fission products, and a part of the solution will be sent through Thorex to remove the remainder.
2. Thorex processing will be used for separating U^{233} and fission products in the blanket slurry from the two-region reactor.
3. Thorex processing will be used for the core of the one-region, thorium breeder reactor with a slurry fuel.
4. A modified Purex process will be used for processing fuel from the one-region, U-Pu reactor for partial removal of fission products and for complete decontamination of a part of the fuel.
5. A modified Purex process will be used for processing the core and the blanket of the two-region, U-Pu reactor to remove fission products.

Although other chemical methods may be much more attractive for future application, only those listed above have a firm enough basis for economic studies at present.

Calcium Fluoride Process

Laboratory experiments have shown that calcium fluoride will remove the rare-earth fission products from a solution of uranyl sulfate. The reaction is a metathesis in which the insoluble rare-earth fluoride and the calcium sulfate are formed. Since the solubility of the calcium sulfate varies inversely with temperature, its concentration in the effluent stream may be decreased by raising the temperature of the adsorption bed. Because the increased temperature has the adverse effect of greatly increasing the fluoride contamination of the treated fuel solution, a two-step process, for which a block flowsheet is shown in Fig. 27, has been proposed.

The solution is brought into contact with the calcium fluoride, probably in a packed bed, at approximately 100°C. Design of this process is based upon experimental indications that 1 g of calcium fluoride will remove the rare earths from at least 300 ml of solution containing 0.2 g of rare-earth poisons per liter. The exit solution, saturated with $CaSO_4$ at 100°C, would contain approximately 1.3 g of $CaSO_4$ per liter. In addition, it would contain 0.2 to 0.3 g of fluoride ion per liter. It is presently believed that these constituents could be removed most readily by treating the solution with thorium sulfate, 10% in excess of the fluoride content. After its precipitation, the thorium fluoride and also the calcium sulfate could be removed by filtering through a bed of calcium sulfate at 250°C. The increased temperature would reduce the calcium sulfate solubility below a permissible limit. This last phase of operation has been covered only by brief laboratory experiments.

A preliminary flowsheet for an adsorption unit capable of processing about 2500 liters/day of solution of uranyl sulfate in D_2O has been prepared and an estimate made of the processing cost (48). Examination of the cost data reveals that the daily operating cost for plants processing several kilograms of uranium per day can be expressed as

$$\text{Daily cost} = \$400 + \$0.20\, w_U \ .$$

Less than 0.1% of the uranium which passes through the system was found by experiment to be held up in the calcium fluoride bed. As much as 90% of this uranium can be recovered by washing with water so that the loss is less than 0.01% of the uranium processed.

There is a good possibility that the solubility of some fission products is so low at 250°C that filtration will prove to be as effective as the calcium fluoride process in reducing the poison level. The difference in cost between simple filtration and calcium fluoride processing should be small.

Thorex Process

Solutions or slurries containing thorium, uranium, and fission-product poisons are evaporated first to recover the D_2O. The solids are then dissolved with a fluoride catalyst in nitric acid and light water, and the solution is cooled for a minimum of 30 days. At the end of this period a considerable amount of protactinium remains to be treated

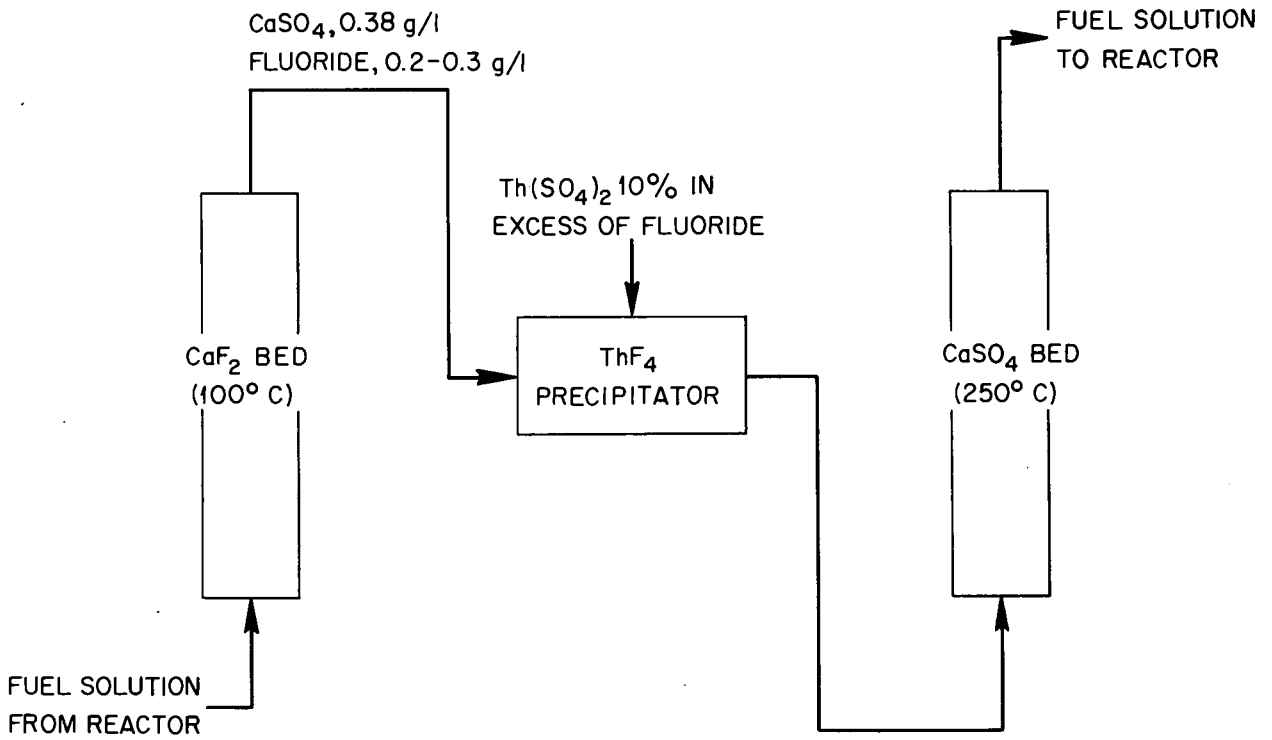

Fig. 27. Calcium Fluoride Adsorption Process.

separately in the process. Cooling for 200 days eliminates the need for a protactinium recovery unit. After cooling, aluminum nitrate is added to the solution and the concentration is adjusted to that required for process feed.

As shown in Fig. 28, the solution is fed into the first of three contactors where an organic solvent consisting of 42.5% tributyl phosphate in Amsco extracts the thorium and uranium, leaving the fission products and protactinium in the aqueous phase. A silica-gel adsorption column is used to remove the protactinium from this stream and to hold it until it decays to uranium. Upon decay it is automatically desorbed and the uranium is recycled to the feed adjustment tank and to the first contactor for further decontamination.

In the second column the thorium stream is stripped from the organic phase by the addition of dilute nitric acid. The thorium stream is then concentrated by evaporation; the solution is converted into a slurry, dried, and suspended in D_2O to be returned to the reactor. The Th^{234} activity requires either that the total cooling time for the thorium be about 200 days or that the evaporation and feed preparation be done remotely.

Uranium is stripped from the organic phase by elution with slightly acidified water and is concentrated on an ion-exchange bed. It is then eluted from the resin as uranyl sulfate, dried, and dissolved in D_2O to be returned to the reactor core.

The solvent is neutralized and washed in two additional columns and returned to the process. Waste streams are concentrated by evaporation, neutralized, and stored.

Losses of thorium and uranium are less than 0.1% of the material processed.

An estimate has been made which relates the cost of Thorex processing to plant capacity (48). The results can be expressed with reasonable accuracy as

$$\text{Daily cost} = \$5900 + \$3.00\, W_{Th} + \$1.00\, w_U ,$$

where W_{Th} and w_U are respectively the processing rates in kilograms per day of thorium and grams

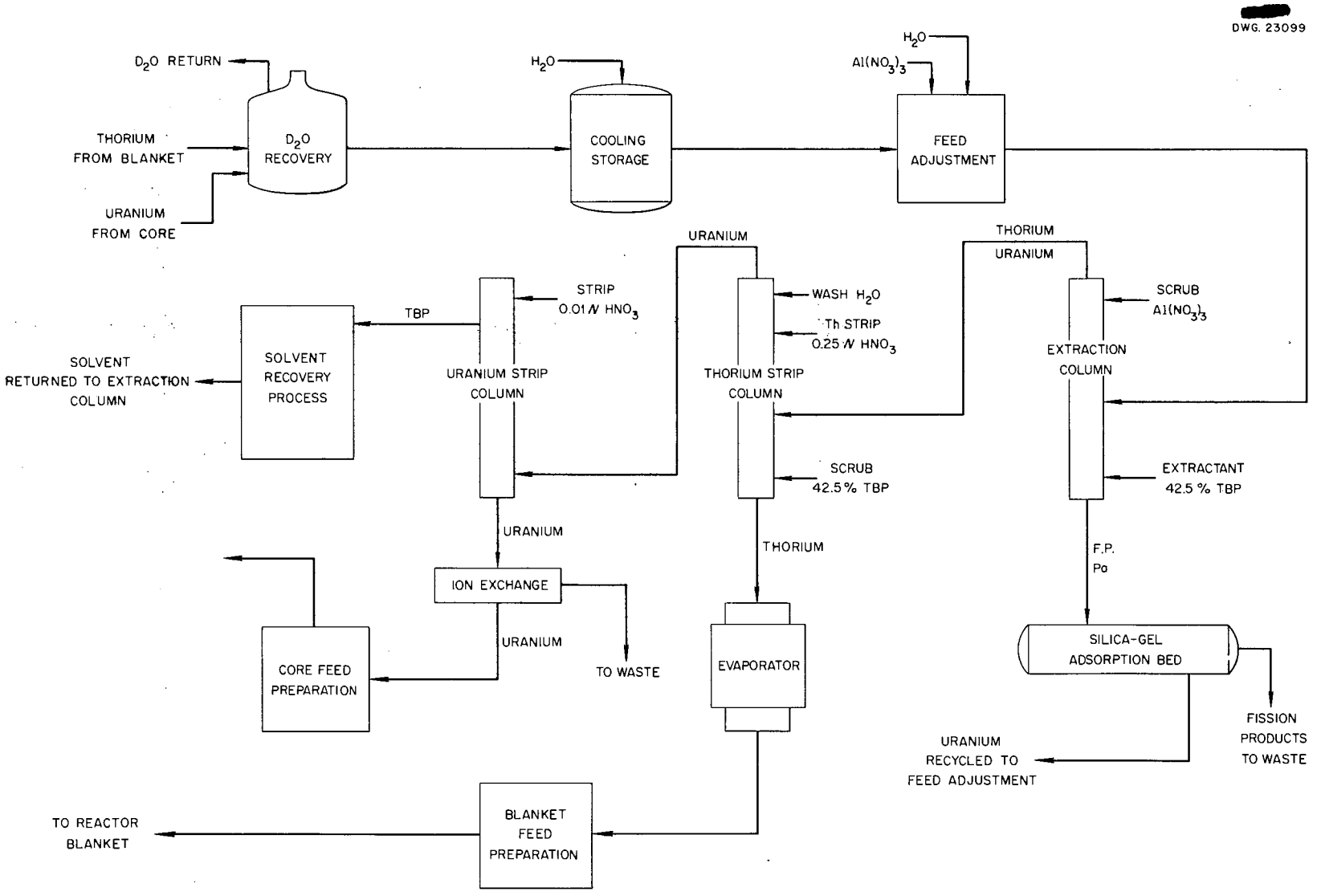

Fig. 28. Thorex Process.

per day of U^{233}. The distribution of variable processing costs between uranium and thorium was based on the postulate that the uranium content of the thorium has relatively little effect upon the cost of those sections of the plant which handle thorium or thorium and uranium. Only about one-fourth of the plant is devoted exclusively to uranium processing.

Purex Process

The preparation of either solutions or slurries of uranium and plutonium in D_2O for feed to a Purex process entails three major operations. The first is D_2O recovery and dissolution of solids by nitric acid in light water. Next, the solution is cooled for a minimum of 20 days – but preferably 60 days – to permit the neptunium and some of the fission products to decay. The third step is adjustment of concentration and acidity to the feed specifications.

The first operational cycle shown in Fig. 29 involves extraction in three pulse columns or mixer-settler units. In the first contactor the uranium and plutonium, in the hexavalent state, are extracted from the feed solution by an organic solvent consisting of 30% tributyl phosphate in Amsco, while the fission products remain in the aqueous phase. The organic stream is then divided into two portions. From one, the plutonium and uranium are both stripped with water. This partially decontaminated fuel is then returned to the reactor feed preparation equipment. The other stream, which contains uranium to be returned to the diffusion plant for re-enrichment, proceeds to a second contactor in which plutonium is reduced to the tetravalent state by the addition of hydroxylamine and is stripped from the organic phase. This plutonium is also forwarded to reactor feed preparation equipment, while the organic stream goes to a third contactor where the uranium is stripped from the organic phase with water.

A second cycle is used to decontaminate the aqueous uranium stream further. The stream is adjusted in concentration and acidity, and the uranium is again extracted with 30% tributyl phosphate in Amsco. The uranium is stripped as in the first cycle, concentrated by evaporation, stored until the U^{237} has decayed, and precipitated; the precipitate is then dried and packaged for shipment to the diffusion plant.

The used solvent from the three cycles is scrubbed with sodium carbonate, caustic, and water in two additional contactors and then stored for return to the process. The waste streams containing the radioactive fission products are concentrated by evaporation, neutralized, and stored.

Losses of both plutonium and uranium have been shown to be less than 0.1% of the material processed.

An investigation of the processing costs (*49*) indicates that for plants processing between 500 and 2500 kg of uranium per day, the daily cost for partial decontamination of mixtures of uranium and plutonium may be related to the processing rate by

$$\text{Daily cost} = \$3000 + \$3.00\, W_U \ .$$

In the same range of capacities, complete decontamination of uranium for return to the diffusion plant and minimum handling of plutonium increases both the fixed and unit costs to give

$$\text{Daily cost} = \$4700 + \$3.50\, W_U' \ .$$

Adding plutonium decontamination facilities to the uranium processing plant would be expected to increase the costs by about $1.00 per gram of plutonium processed. Thus, for a plant in which both partial and complete decontaminations are performed, the daily operating costs may be expressed by

$$\text{Daily cost} = \$4700 + \$3.00\, W_U + \$3.50\, W_U' + \$1.00\, w_{Pu} \ ,$$

where W_U is the kilograms per day of uranium partially decontaminated, W_U' is the kilograms per day of uranium completely decontaminated, and w_{Pu} is the grams per day of plutonium handled separately from the uranium.

D_2O Recovery

Two processes have been proposed by the Vitro Corporation for recovering D_2O from uranyl sulfate solutions and from slurries. One involves evaporating the material to approximately 60% solids and then completing the drying in a pan dryer at 500°C. The other differs only in that all the evaporation is performed in a pan dryer. Drying-tray area requirements were approximately 50 to 100 ft^2 per thousand pounds of uranium dried per day. An economic analysis based upon preliminary flowsheets and equipment lists indicates that the cost of D_2O recovery will be $0.30 to $0.40 per

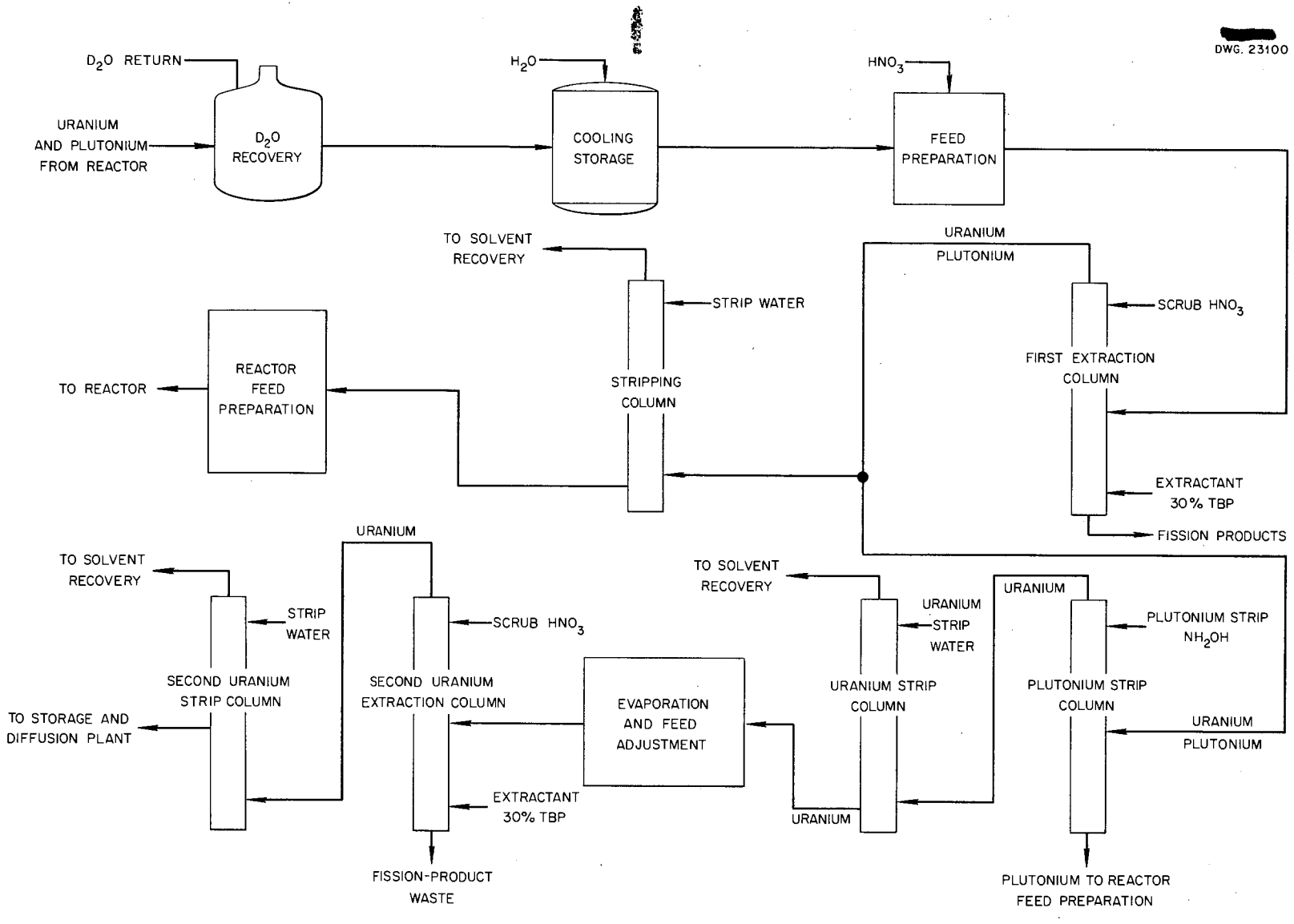

Fig. 29. Purex Process.

pound in a plant handling 2 to 4 tons of D_2O per day. A flowsheet for the process is shown in Fig. 30.

Gross D_2O losses based on 0.05% moisture in the solids and exit air dried to a –51°C dewpoint were estimated at 2.2 lb/day in a 7500 lb/day plant, which is equivalent to 0.1% of the weight of solids dried.

Processing Costs for Economics Studies

Values for processing costs which will be used in the analysis of fuel costs are the following:

Calcium fluoride adsorption process,

$$\text{Daily cost} = \$400 + \$0.20\, w_U;$$

Thorex process,

$$\text{Daily cost} = \$5000 + \$3.00\, W_{Th} + \$1.00\, w_U;$$

Purex process,

$$\text{Daily cost} = \$5000 + \$3.00\, W_U + \$3.50\, W'_U + \$1.00\, w_{Pu};$$

D_2O recovery,

$$\text{Unit cost} = \$0.35 \text{ per liter of } D_2O.$$

Costs for the Thorex and Purex processes were adjusted to make the fixed charges equal because there is no very apparent reason for a significant difference between the plants. Purex costs were weighted more heavily in making the modification because cost data are available for several plants which either have been built and operated or are in advanced stages of construction.

The cost of D_2O recovery is about half that suggested in the Vitro analysis. This reduction was made because the D_2O recovery will be only a small part of a large integrated chemical processing plant, which should result in savings in both investment and operating costs. Also, the plants which have been used as a basis for Thorex and Purex costs include facilities (for processing metal slugs) which are not required for fluid fuels. Such facilities could be replaced by a part of the D_2O recovery equipment.

The chemical-plant costs include operating labor and supervision, maintenance, overhead, and a fixed charge of 16% on the plant investment. The 16% charge is based upon AEC accounting practices. While not quite consistent with the 15% recommended by the AEC Evaluations Group and used for the power plant, the 16% charge is believed to be considerably less than the fixed

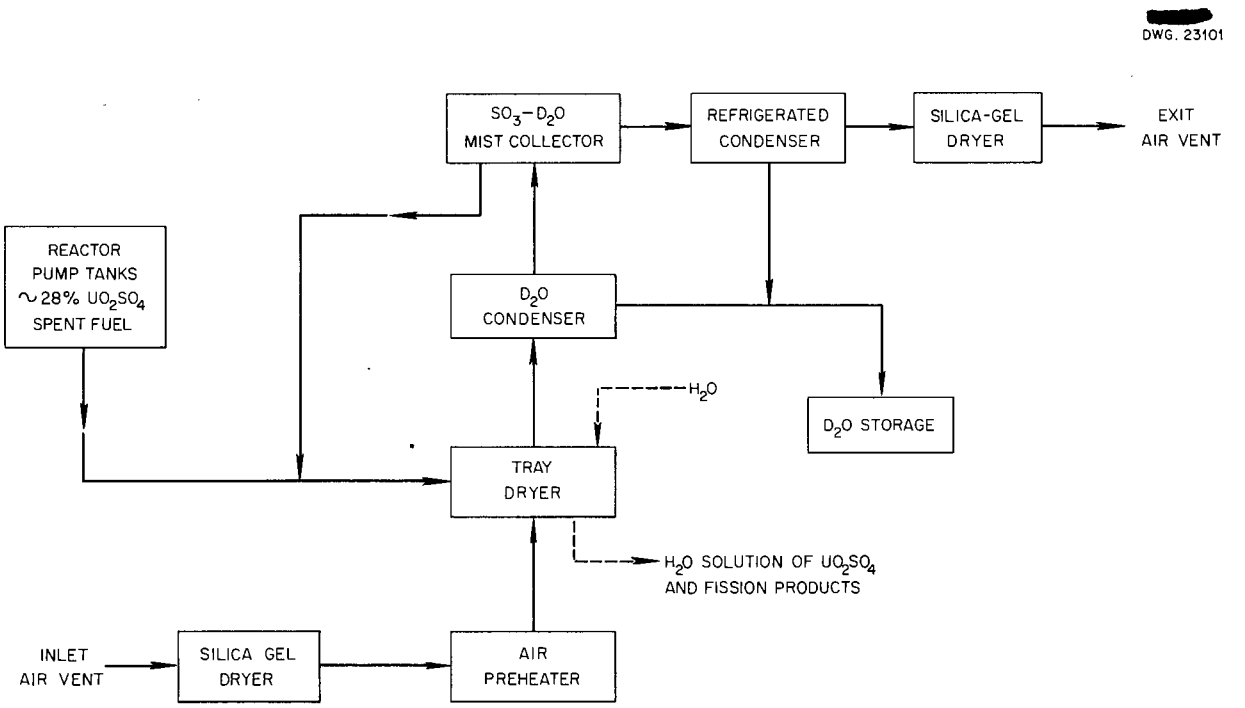

Fig. 30. Heavy-Water Recovery Process.

charge generally used in the chemical industry. The cost equations are not considered to be sufficiently accurate to warrant a change in the basis.

Optimum Core Processing Cycles for Two-Region Breeders

Usually it is impossible to define optimum processing cycles for a reactor without making a complete analysis of the fuel cycle. However, in the case of the two-region Th-U^{233} reactors there are two processes available for removing fission products from the core solution. The calcium fluoride process seems to be inexpensive but will remove only a part of the fission products. The other, Thorex, is a relatively costly process but is capable of removing all the fission products.

The distribution of processing of core solution between CaF_2 adsorption and Thorex depends upon the relative costs and efficiencies of the two processes. Processing cycles are determined by balancing the cost of reducing the poison level against the value of U^{233} lost when neutrons are absorbed by poisons. In making this balance there are three groups of poisons to be considered. The first consists of the gases; the second contains the high-cross-section isotopes; and the third is composed of the low-cross-section isotopes which transmute either radioactively or by neutron capture into other nuclides of approximately the same low cross section.

The group of gases can be given a small constant value in the poison calculations. The gas of greatest concern, Xe^{135}, is removed from the solution continuously and decays outside the core. It is estimated that the steady-state xenon poisoning will be lower by a factor of 10 than that calculated for no removal. A value of 0.5×10^{-2} is considered to be reasonable for the poison contribution of all the gaseous fission products.

Fission products in the second group are stable nuclides having an average cross section of 30,000 barns at 250°C and a yield of 0.008. They reach steady state rapidly at the flux of the reactor, and the poison level is unaffected by processing cycles expected to be economical for aqueous homogeneous reactors. The steady-state poison level in terms of neutrons absorbed in poison in the core per neutron absorbed in U^{233} in the core is $0.008/(1 + \alpha)f$.

The third group contains the remainder of the fission products plus the products which are formed when members of the first and second groups decay or absorb neutrons. The yield for the group may be taken as 1.8 and the average cross section as 30 barns at 250°C. When a nucleus in this group decays or absorbs a neutron, the new nucleus is assumed to have the same cross section.

The third group can be further divided into two subgroups: the rare earths and other species which are removed quantitatively by CaF_2 or Thorex and which constitute 80% of the group, and the remaining 20% which must be removed by the Thorex process. Under steady-state conditions, the poison effect of the nuclei in the third group in terms of the processing cycles is

$$\frac{1.8 \times 30A}{\sigma_a(23)} \times \frac{P_c}{M_1 f}\left(\frac{0.8}{\frac{1}{T_1} + \frac{1}{T_2}} + \frac{0.2}{\frac{1}{T_2}}\right).$$

The total poison for all fission products is therefore

$$p = \left(0.5 + \frac{0.73}{f}\right) \times 10^{-2} + 0.122\,\frac{AP_c}{M_1 f}\left(\frac{0.8T_1T_2}{T_1 + T_2} + 0.2T_2\right).$$

The total cost for a given processing scheme may be expressed in the form

$$C = K + \frac{BM_1}{T_1} + \frac{DM_1}{T_2},$$

where K includes the fixed charges, and B and D are the total costs per kilogram including the inventory charges and the value of process losses for the CaF_2 and Thorex processes, respectively. For minimum cost, the periods T_1 and T_2 depend on the ratio D/B. Setting $dC/dT_2 = 0$ and using the expression for fission-product poisons gives the optimum Thorex cycle period as

$$\frac{T_2}{\theta} = \frac{5\left(1 - \frac{D}{B}\right)}{5 - \frac{D}{B}}\left(1 - \sqrt{1 - \frac{5 - \frac{D}{B}}{1 - \frac{D}{B}}}\right),$$

where

$$\theta \equiv \frac{p - \left(0.5 + \frac{0.73}{f}\right) \times 10^{-2}}{0.122 \frac{AP_c}{M_1 f}}$$

is essentially a period for neutron loss due to chemical processing. For finite, nonnegative values of T_1, it is necessary that T_2 be so bounded that $1 < T_2/\theta \leq 5$. This condition follows from rearranging the equation

$$\frac{T_1}{\theta} = \frac{T_2}{\theta}\left(\frac{1 - 0.2\frac{T_2}{\theta}}{\frac{T_2}{\theta} - 1}\right).$$

The variation of T_1/θ and T_2/θ with D/B is presented graphically in Fig. 31.

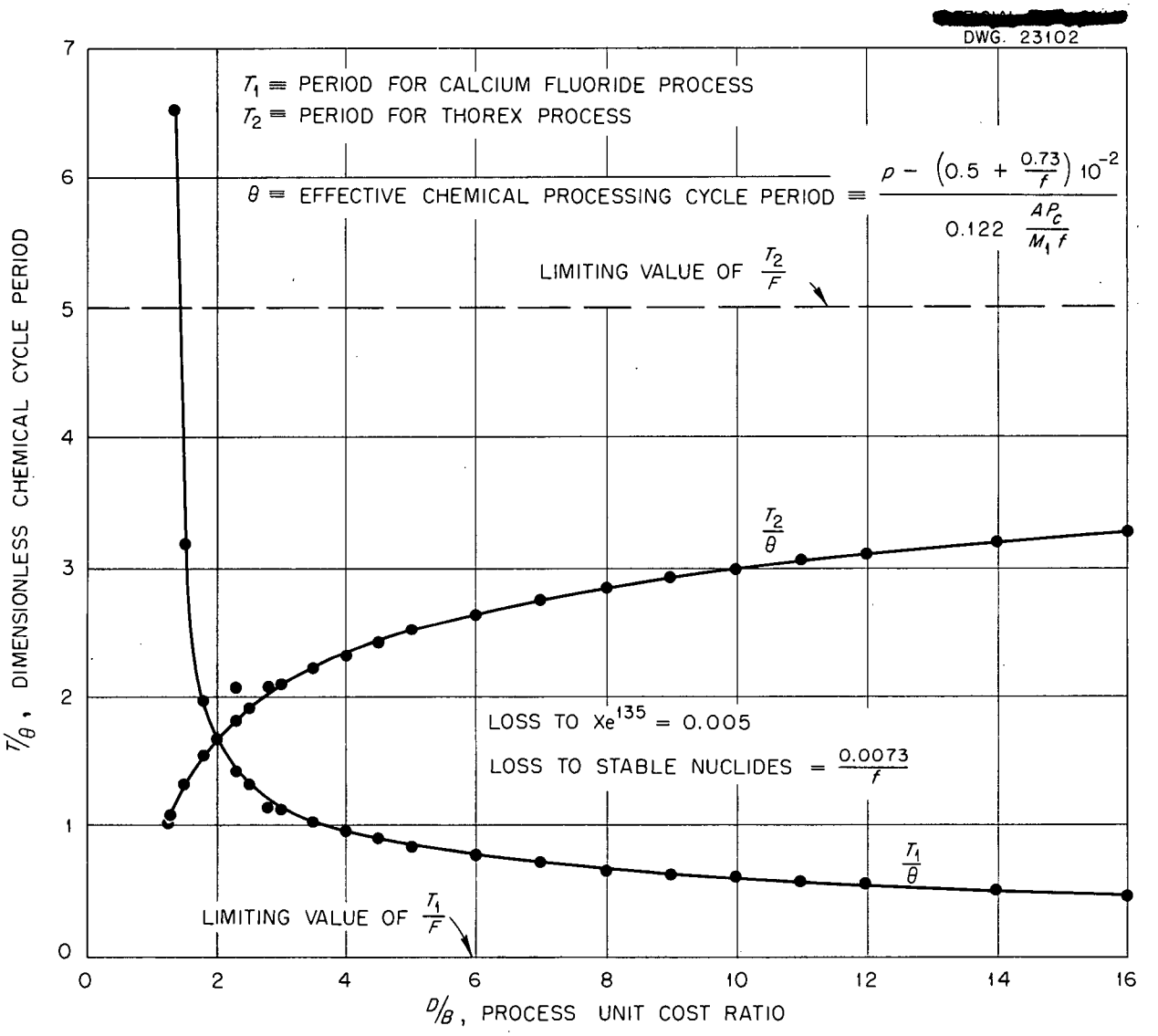

Fig. 31. Cycle Periods for Minimum Chemical Processing Costs for Core.

ECONOMICS OF POWER PRODUCTION

BASIS FOR ECONOMICS EVALUATION

General Considerations

Determining the cost of power from nuclear power plants requires that the fixed charges on investment and the operating and maintenance costs be established and that an analysis be made of the fuel costs. Generally it is desired to determine whether the cost of nuclear power will be competitive with the cost of power from fossil-fueled plants. This is done by setting up a comparable basis for evaluating the various charges and, insofar as possible, by directly comparing nuclear plants with conventional plants. It has been agreed that economic analyses should be based upon the practices of privately owned utilities. Although it is necessary to examine the fixed charges and operating and maintenance costs, it will be difficult to argue convincingly that they can be equal to or less than those corresponding to a conventional plant until large nuclear power plants have been built and operated. Under these circumstances, the most attractive feature of nuclear power becomes the potentially lower fuel costs. Possibly the most important part of current evaluations is the determination of whether low fuel costs are probable.

Cost of Power in Conventional Plants

The cost of power produced in conventional steam plants may be subdivided into fixed charges, operating and maintenance costs, and fuel costs. Fixed charges include interest on investment, depreciation, and taxes. Labor, supervision, and materials are included in the operating cost. The fuel cost is the direct cost of coal, gas, or oil delivered to the plant.

Fixed charges are regulated by the Federal Power Commission and the state utilities boards to yield a reasonable return on investment. A typical value for the fixed charge is 13.5% on the total plant investment, composed as shown in Table 10.

Fixed charges average 52%, fuel 41%, and operating and maintenance 7% of the total production cost in modern, large power plants. A summary of experience with several recent plants is presented in Table 11.

TABLE 10. COMPOSITION OF FIXED CHARGES FOR TYPICAL PUBLIC UTILITY (*50*)

	Per Cent
Return on investment	5.70
Ad valorem taxes	2.00
Insurance and miscellaneous	0.10
Amortization	2.00
State income tax	0.31
Federal income tax	3.38
Gross return on investment	13.49

Cost Basis for Nuclear Power Plants

A tentative basis for establishing the fixed charges for a nuclear power plant has been established by the Evaluation Staff of the AEC Division of Reactor Development (*11*). A 15% charge is assessed against the investment in power plant, and 12% is assessed against inventory items such as D_2O and fertile and fissile materials which are assumed to be nondepreciating items.

Much of any nuclear power plant will be similar to a coal-fueled plant. Thus, the capital investment can be predicted by substituting the best possible estimate of the cost of the reactor and associated equipment for the cost of the boilers and auxiliaries in a conventional power plant, with adjustments being made in the nuclear plant cost where dictated by peculiar conditions.

Operating and maintenance costs are established by comparison with conventional steam plants. Fuel costs are based upon the best available cost data for chemical processing and for feed materials. All costs associated with the processing of fertile and fissile materials, including the investment charges against the chemical plant, are included in the fuel costs.

TWO-REGION POWER BREEDER

Fixed Charges on Plant Investment

The fixed charges on the plant investment are related to the reactor and power plant costs by

$$\mathfrak{F} = R\left(\frac{C_R + 1000P_RE_GC_P}{8760eP_RE_N}\right) .$$

TABLE 11. PRODUCTION COSTS FOR MODERN POWER PLANTS (51)

(100 Mw and larger; 22 plants)

	PRODUCTION COST (mills/net kwhr)		
	Minimum	Average	Maximum
Fuel	1.107	2.70	5.63
Operating and maintenance	0.25	0.51	1.10
Fixed charges	1.00	3.46	10.02
Total cost of energy	3.48	6.67	14.11
Plant factor, annual	92.1%	72.92%	25.3%
Fixed charges computed at	6.0%*	13.79%	15.0%

*Government plant.

Values of 0.15 and 0.80 are recommended for fixed charges and for plant factor. Costs are obtained from data presented in the sections on reactor and power plants. Cost data for the 1350-Mw, two-region reactor station are presented in Table 12. Fixed charges are 4.0 to 4.4 mills/kwhr when the plant is operated at 250°C to produce 215-psia steam. They will be reduced to 3.8 to 4.2 mills/kwhr if the reactors can be operated at 300°C to produce 560-psia steam. Curves in Fig. 32 give the variation of fixed charges with plant capacity for plant capabilities above 100 Mw. Although drawings of the power stations show outdoor turbogenerator installations, most of the plants built today include housing for the turbogenerators. Data for the power plant costs that were used in obtaining the fixed charges were taken directly from Fig. 25 without deducting the $6.50/kw that might be saved with an outdoor installation.

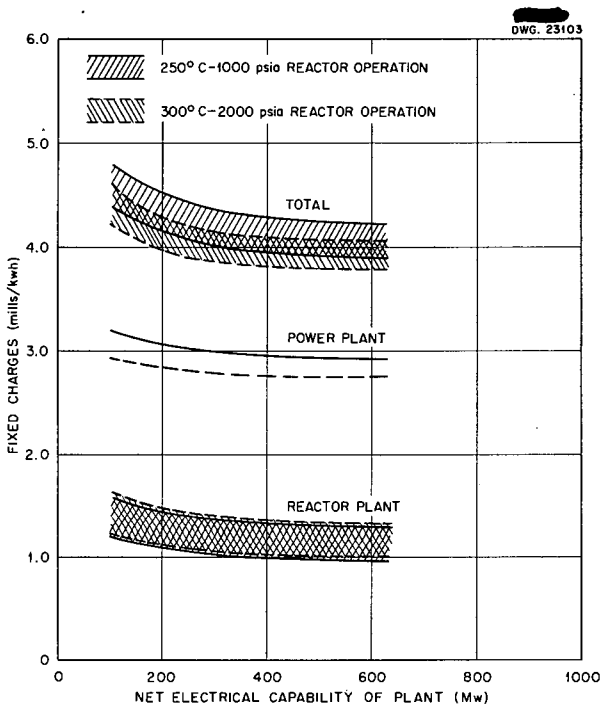

Fig. 32. Effect of Plant Size on Fixed Charges for Two-Region Reactor Station.

Operating and Maintenance Costs

Operating and maintenance costs are difficult to evaluate in any reactor power plant. For purposes of this study the annual maintenance charges are assumed to be 1.5% of the investment or 10% of the fixed charge.

Based on numerous studies it has been concluded that operating costs for nuclear power plants should be about the same as those for chemically fueled plants. In the type of plant being considered, capacity changes are accomplished by varying the number of units of constant size, and the operating costs are closely related to the fixed charges. Operating costs equal to 10% of the fixed charges are considered to be reasonable and conservative for the plants producing 215-psia steam. Since there is little reason to believe that operating costs should change significantly with increasing operating temperature, the costs in mills/kwhr for

TABLE 12. EFFECT OF STEAM CONDITIONS ON FIXED CHARGES FOR 1350-Mw, TWO-REGION REACTOR STATIONS

	OPERATED AT 250°C (482°F)	OPERATED AT 300°C (572°F)
Total heat output for three reactors, Mw	1350	1350
Reactor pressure, psia	1000	2000
Steam pressure, psia	215	560
Steam temperature, °F	388	478
Gross efficiency of turbogenerator plant	0.264	0.307
Gross electrical capability, Mw	356	415
Net station efficiency	0.234	0.274
Net electrical capability, Mw	316	370
Reactor plant cost, millions of dollars	15 to 20	18 to 24
$/kw net capability	47 to 63	50 to 66
Power plant cost, millions of dollars	44	48
$/kw gross capability	123	116
$/kw net capability	139	130
Total plant cost, millions of dollars	59 to 64	66 to 72
$/kw net capability	186 to 202	178 to 195
Fixed charge,* mills/kwhr	4.0 to 4.4	3.8 to 4.2

*Based upon 15% return and 0.80 plant factor.

the 215-psia plants are multiplied by 0.85, the ratio of net station efficiencies, to obtain the operating costs for plants producing 560-psia steam.

Figure 33 shows the relationship between maintenance and operating costs and plant capacity and operating temperature. The total charges for the 1350-Mw reactor station operated at 250 and 300°C are 0.8 and 0.7 mill/kwhr, respectively.

Fuel Costs

Composition of Fuel Costs. Reactor fuel costs can be subdivided into the following components:

1. cost of fissile and fertile material consumed, which includes the cost of thorium and uranium supplied to the reactor and credit for excess fissionable material produced or depleted material returned to the diffusion plants,
2. cost of chemical processing and D_2O inventory,
3. inventory charges and losses of fissile and fertile materials in the reactor and chemical plants,

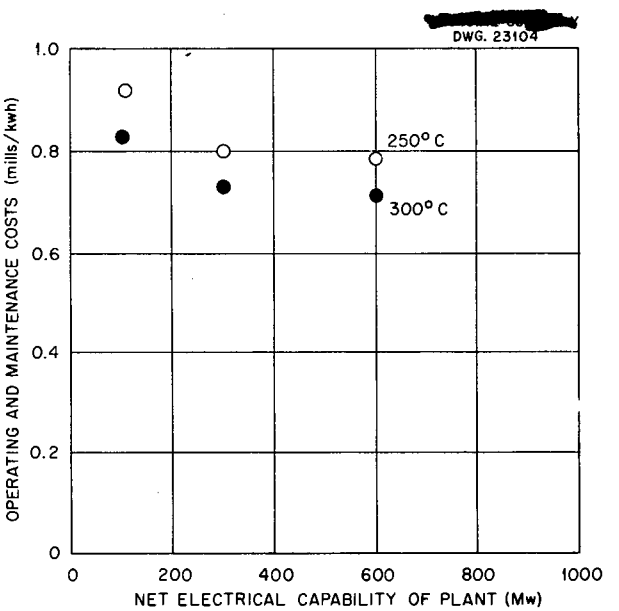

Fig. 33. Effect of Plant Size on Operating and Maintenance Costs for Two-Region Reactor Station.

4. inventory charges and losses of D_2O in reactor and chemical plants.

Minimum fuel costs for a given reactor system result from balancing low neutron losses obtained by rapid processing, large reactor size, and high concentration of fissile and fertile materials against processing costs and losses, inventory charges, and enrichment costs.

The fuel consumption of a Th-U^{233} system may depend significantly on the design. Excess U^{233} can be produced by breeding in an efficient reactor, the conversion ratio can be less than unity so that some enriched fuel must be supplied to the reactor daily, or the effective conversion ratio can be just unity so that there is neither net production nor makeup required. The condition that prevails depends on the design of the reactor, the value of U^{233}, and the economics of chemical-plant operation. For given reactor and chemical-plant designs the operations should be optimized to yield a minimum total fuel cost.

Neutron balances and conversion ratios are presented in Table 13 for a two-region reactor with a 6-ft-dia core surrounded by a 2-ft-thick blanket, both operated at a temperature of 250°C. Results are included for thorium concentrations from 500 to 4200 g/liter and U^{233} concentrations from 0 to 7 g per kilogram of thorium, with no poison in the core. In making the economics calculations, corrections are applied to the critical concentration in the core, the breeding gain, and the power produced in the blanket as poisons are added to the core. Breeding gains are reported as atoms of U^{233} produced per atom of U^{233} consumed in the core and are true gains when there are no fissions in the blanket. When power is produced in the blanket, the true gain is obtained by multiplying the values tabulated by the ratio of power produced in the core to the total power. A good approximation of the effect of poisons in the core upon breeding gain is obtained by subtracting the poison fraction from the gain reported in Table 13.

Fissile and Fertile Materials Cost. As thorium is consumed in the two-region breeder, excess U^{233} may or may not be produced, depending on whether or not the credit for it exceeds the production cost. From 95 to 100% of the thorium consumed produces nuclei, U^{233} and U^{235}, which are either fissioned or removed from the reactor as excess fissionable material. As much as 5% of the thorium may yield higher isotopes which are removed in chemical processing. Combining the various contributions gives the daily cost of the thorium consumed in the reactor as

$$C_1 = 1.05 v_1 A \left\{ P_B + P_C [1 + f(1 + a) G] \right\} .$$

The value of any excess U^{233} produced is

$$V = vAP_C f(1 + a) G .$$

Chemical Processing and D_2O Recovery Costs. Two chemical processing schemes are involved in the two-region reactor. The CaF_2 adsorption process has been proposed for removing the bulk of the fission-product poisons from the core. The Thorex process is used to separate the U^{233} from the blanket material and for removing those fission products from the core solution which are not adsorbed by CaF_2. Daily costs for core processing can be obtained from the data in the section, "Processing Costs for Economic Studies." The cost equations become

$$C_2 = \frac{\$400}{n_1} + \$200 \frac{M_1}{T_1}$$

for CaF_2 processing and

$$C_3 = \$1000 \frac{M_1}{T_2}$$

for uranium processing in a Thorex plant.

Processing cycles for the blanket are governed by the unit cost of processing thorium, the value of the U^{233} inventory, and the return on power produced in the blanket as the U^{233} concentration is increased. The daily cost of processing the thorium is

$$C_4 = \frac{\$5000}{n_2} + \frac{M_3}{T_3} (\$3.00 + \$1.00\, R) .$$

There is no well-established basis for estimating the amounts of D_2O that must be recovered in the processing plant. The solution from the core should be concentrated to 100 g of fissionable uranium per liter of D_2O before it is sent to the Thorex plant. Daily D_2O recovery costs for Thorex processing of the core would be $\$3.50\, M_1/T_2$. Slurry from the blanket may be shipped to the chemical plant in the concentration that exists in the reactor. The resulting D_2O recovery cost would be $\$0.35\, S_2/T_3$, and the total daily recovery cost would be

$$C_5 = \$3.50 \frac{M_1}{T_2} + \$0.35 \frac{S_2}{T_3} .$$

TABLE 13. NEUTRON BALANCES FOR TWO-REGION REACTORS

Conditions: 250°C
6-ft-dia core operated at 320 Mw
2-ft-thick blanket
No poison in core

	THORIUM CONCENTRATION IN BLANKET													
	500 g/liter				750 g/liter		1000 g/liter				4200 g/liter			
U^{233}/Th ratio in blanket, g U^{233}/kg Th	0	3	5	7	0	7	0	3	5	7	0	3	5	7
Critical concentration of U^{233} in core, g/liter	1.18	1.12	1.07	1.03	1.24	1.09	1.28	1.21	1.17	1.12	1.38	1.25	1.18	1.12
Breeding gain, $\frac{U^{233}\text{ atoms produced}}{U^{233}\text{ atoms consumed in core}} - 1$	0.14	0.071	0.043	−0.026	0.18	0.11	0.20	0.19	0.20	0.20	0.22	0.24	0.26	0.26
Blanket power, Mw	0	90	160	240	0	240	0	88	160	240	0	70	120	170
Neutron balance, $\frac{\text{absorptions}}{\text{absorptions in } U^{233}\text{ in core}}$														
Absorption in the core by														
U^{233}	1.00													
U^{234}	0.090													
U^{235}	0.090													
U^{236}	0.014													
S	0.002													
D_2O	0.031	0.033	0.034	0.035	0.030	0.034	0.029	0.030	0.031	0.033	0.027	0.029	0.031	0.033
Absorption in the core tank	0.066	0.071	0.075	0.078	0.058	0.065	0.049	0.052	0.055	0.058	0.028	0.031	0.032	0.035
Absorption in the blanket by														
Th^{232} (resonance)	0.099	0.24	0.35	0.47	0.12	0.60	0.14	0.35	0.51	0.69	0.23	0.53	0.71	0.89
Th^{232} (slow)	1.04	1.17	1.22	1.35	1.06	1.35	1.06	1.16	1.24	1.33	0.99	0.97	0.96	0.95
Pa^{233}	0	0.037	0.041	0.041	0	0.030	0	0.021	0.023	0.024	0	0.007	0.008	0.009
U^{233}	0	0.30	0.54	0.81	0	0.81	0	0.30	0.53	0.79	0	0.25	0.41	0.57
U^{234}	0	0.003	0.007	0.014	0	0.011	0	0.002	0.005	0.009	0	0.008	0.002	0.004
U^{235}	0	0.001	0.003	0.008	0	0.005	0	0.0006	0.002	0.004	0	0.0001	0.0006	0.001
Fission products*	0	0.019	0.051	0.13	0	0.099	0	0.015	0.042	0.083	0	0.009	0.022	0.040
D_2O	0.006	0.007	0.007	0.008	0.004	0.005	0.003	0.003	0.003	0.003	0.0003	0.0003	0.0003	0.0003
Leakage: Slow	0.005	0.065	0.082	0.095	0.018	0.047	0.008	0.015	0.020	0.026	0.0000	0.0001	0.0001	0.0001
Leakage: Fast	0.008	0.052	0.083	0.14	0.005	0.11	0.004	0.028	0.051	0.079	0.017	0.042	0.057	0.072

*Steady state based upon processing rate required to maintain U^{233} concentration in blanket.

Inventory and Losses of Fissile and Fertile Materials. Fissile and fertile materials in the reactor and the chemical plants are considered to be nondepreciating capital items valued at the cost of the materials required to establish the inventory. The entire quantity of thorium is valued at the purchase price of the thorium required to stock the plants. Similarly, it is assumed that U^{233} or U^{235} from an outside source must be burned in the core to establish the entire inventory. The quantity purchased will be the inventory in the core system, in the blanket system, and in the chemical plant corrected by the net conversion ratio.

An annual charge of 12% is assessed against all inventories. Daily charges corrected to days of full power operation are, for U^{233},

$$I_1 = \frac{0.12v}{365e}\left[M_1\left(1+\frac{t}{T_2}\right)+\frac{M_2}{1+G}\left(1+\frac{t^*}{T_3}\right)\right]$$

and, for thorium,

$$I_2 = \frac{0.12v_1M_3}{365e}\left(1+\frac{t^*}{T_3}\right).$$

Losses of uranium and thorium in the Thorex process are limited to 0.1%. As much as 1% of the material adsorbed in the CaF_2 bed – 0.01% of the uranium processed – may be lost in the recovery operations. The total value of the daily uranium loss is

$$L_1 = 1.0\times10^{-3}\,v\left(\frac{0.1M_1}{T_1}+\frac{M_1}{T_2}+\frac{M_2}{T_3}\right).$$

The daily thorium loss is valued at

$$L_2 = 1.0\times10^{-3}\,v_1\frac{M_3}{T_3}.$$

D_2O Inventory and Losses. The D_2O inventory is also assumed to be a nondepreciating investment with 12% fixed charges. Annual losses are taken to be 5%, as recommended for evaluation studies. As it should be possible to keep the normal operational losses below 2%, the remainder of the 5% can be considered as a depreciation or insurance charge.

Daily withdrawals of fuel from the reactors will usually be 1% or less. Because of the high cost of D_2O an effort will be made to separate it from the fuel as rapidly as is feasible. The basis used in evaluating the reactor requirements is considered to be liberal enough to include the entire D_2O inventory. Daily charges are

$$I_3 = \frac{0.17v_2}{365e}(S_1+S_2)\,\rho.$$

Total Fuel Costs. Fuel costs are shown in Fig. 34 for the type of two-region reactor station operating at 250°C that is described in the section, "Two-Region, 1350-Mw, Reactor Power Plant." The curve labeled "asymptotic cost" refers to systems in which no fixed charges on chemical plants are assessed. This is a limiting case which might be closely approximated either by having a large number of reactors feed single CaF_2 and Thorex plants or by stations in which a marked reduction in fixed charges is achieved by complete integration of the chemical processing plant with the rest of the system. The other curves for fuel costs respectively present costs for stations in which one, three, or six reactors feed a single chemical plant.

The fuel costs plotted in Fig. 34 are minimum values for reactors whose blankets are slurries that contain 1000 g of thorium per liter. These costs are selected from values calculated for several uranium concentrations in the core over a range of core poison levels. In each case, the cost minimum occurred for a poison fraction near 0.075, while the variation was always small in the range from 0.075 to 0.10. The constants used in the foregoing equations for the calculation of fuel costs are presented below. For purposes of these calculations U^{233} is assumed to cost $20 per gram.

A = 1.1×10^{-3} kg fissioned per Mwd

e = 0.8

f = 0.92

P_c = 320 Mw

S_1 = 18,900 liters

S_2 = $(11{,}800 + 1{,}000\,P_B/14)$ liters

t = 10 days

t^* = 30 days

V = $20,000/kg

V_1 = $22/kg

V_2 = $88/kg

α = 0.1

ρ = 1.1 kg/liter

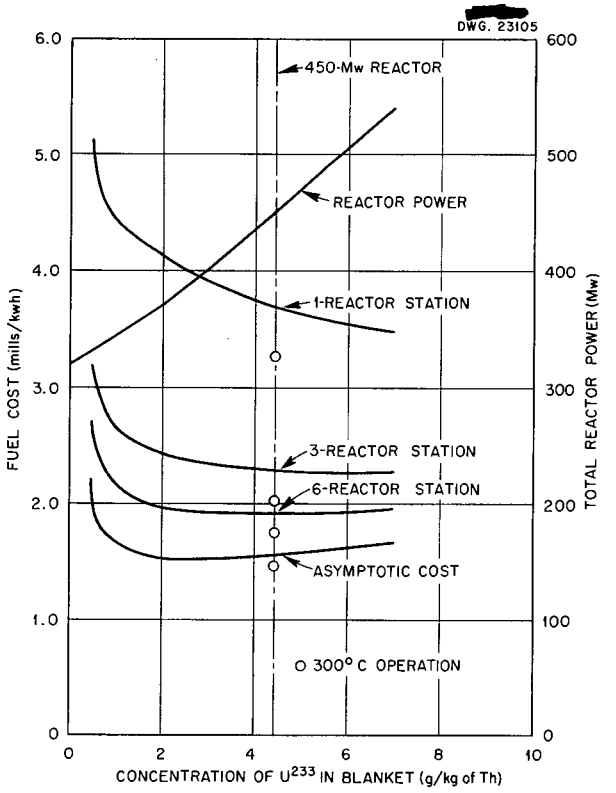

Fig. 34. Total Fuel Cost for 1350-Mw, Two-Region Breeder Operated at 250°C with 1000-g/liter Thorium Blankets.

The effect of changing the cost is illustrated in another section.

Fuel costs for the stations containing one, three, and six reactors, each having a total power of 450 Mw and operating at 250°C, are, respectively, 3.7, 2.3, and 2.0 mills/kwhr. The asymptotic cost is 1.6 mills/kwhr, thus illustrating the marked cost advantages which might be realized either by large-scale chemical-plant operations or by complete integration of the reactor and the chemical plants.

The distribution of the various components of the asymptotic costs is presented in Table 14. Since at minimum fuel cost the value of the excess U^{233} produced is about equal to the inventory charge on fissionable material, the fuel cost is relatively insensitive to the value of U^{233}. Major changes in the asymptotic costs could result only from variations in the cost of D_2O or from improvements in the design of the circulating system so as to reduce the D_2O requirements. If the cost of D_2O were reduced to \$20/lb, the fuel cost would be reduced by approximately 0.4 mill/kwhr. Use of D_2O costing \$80/lb would increase the cost by 0.8 mill/kwhr, which would be almost prohibitive.

Use of N^{15} in a thorium nitrate solution blanket would result in an important increase in cost. If the reactor is to have some breeding gain, the 2-ft-thick blanket should contain at least 500 g of thorium and 130 g of N^{15} per liter of solution. The cost of producing N^{15} in large quantities has been estimated (52) to be \$5/g; so the value of N^{15} in the thorium nitrate solutions would be \$650/liter. With a solution as expensive as this it would be uneconomical to remove much power from the blanket unless very high specific powers could be attained in the heat removal equipment. Assuming no power removal from the blanket, no holdup of N^{15} in an external system, and a 5% annual loss, the value of the N^{15} in the blanket would be \$7,700,000 and the inventory and loss charge would be 2.5 mills/kwhr.

Although CaF_2 processing is specified for continuous removal of rare earths from the core solution, successful development of this or a similar process does not appear to be vital to the future of the two-region breeder reactor. A poison fraction of 0.07 can be maintained in the core of the 320-Mw reactors mentioned in Table 14 by processing the solution through the Thorex plant on a 30-day cycle. The total cost of this processing, including the added inventory and loss charges, exceeds the combined CaF_2 and Thorex core processing costs reported in Table 14 by \$380 per day per reactor. This increases the asymptotic fuel cost by only 0.15 mill/kwhr. The real difference would be even less since elimination of the CaF_2 plant removes the fixed charge of \$400 per day which is divided among the reactors sharing the plant and which is not included in the asymptotic cost.

For a reactor with a 6-ft-dia core and a 2-ft-thick blanket, operation at 300°C requires a 50% increase in uranium concentration in the core and so increases the neutron losses from the blanket that the breeding gain is reduced by about 0.02. Since the uranium holdup of core solution in reactor and chemical plants is only 25 to 30 kg, the required increase in uranium inventory would be less than 15 kg at a daily cost of \$120. The reduction in excess U^{233} production would amount to about \$210 per day, resulting in a cost increase of \$330 per day (or \$0.73/Mwd) over operation at 250°C. The total asymptotic fuel cost for a 450-Mw reactor

TABLE 14. ASYMPTOTIC FUEL COSTS FOR TWO-REGION BREEDER REACTORS OPERATED AT 250°C WITH THORIUM OXIDE SLURRY BLANKETS CONTAINING 1000 g of THORIUM PER LITER

	CONCENTRATION OF U^{233} IN BLANKET			
	1.0 g/kg of Th	3.0 g/kg of Th	5.0 g/kg of Th	7.0 g/kg of Th
Concentration of U^{233} in core, g/liter	1.38	1.32	1.28	1.22
Poison level in core, $\frac{\text{neutrons absorbed in poison}}{U^{233}\text{ atoms consumed in core}}$	0.075	0.075	0.075	0.075
Breeding gain, $\frac{U^{233}\text{ atoms produced}}{U^{233}\text{ atoms consumed in core}} - 1$	0.13	0.12	0.12	0.13
Total power,* Mw of heat	343	400	466	540
Net Mw of electricity	80	94	109	126
Total U^{233} requirement, kg	62	100	156	230
Total Th requirement, metric tons	19	20	24	29
Total D_2O requirement, metric tons	36	41	46	52
Costs, $/day				
Thorium consumption (C_1)	10	11	13	15
CaF_2 processing (C_2)	190	190	190	190
Thorex processing of core (C_3)	280	280	280	280
Thorex processing of blanket (C_4)	1000	700	600	550
D_2O recovery (C_5)	72	37	25	19
Uranium and thorium losses ($L_1 + L_2$)	25	22	22	21
Uranium inventory (I_1)	510	830	1280	1910
Thorium inventory (I_2)	170	180	220	260
D_2O inventory and losses (I_3)	1860	2100	2370	2670
Value of excess U^{233} produced (V)	920	870	870	920
Net cost, $/Mwd of heat	9.4	8.7	8.9	9.3
mills/kwhr of electricity	1.67	1.55	1.58	1.65

*Core power = 320 Mw.

operated at 300°C is $9.59/Mwd; however, the increased efficiency of the electrical plant results in a reduction in the asymptotic fuel cost from 1.57 mills/kwhr at 250°C to 1.43 mills/kwhr at 300°C.

Fuel costs for the 450-Mw reactor with a 6-ft-dia core and a 2-ft-thick blanket containing 1000 g of thorium per liter and 4.5 g of U^{233} per kilogram of thorium are summarized in Table 15.

Although a slurry blanket containing 1000 g of thorium per liter was selected for the two-region breeder studies, it is conceivable that other concentrations, or blanket types, could result in fuel-cost savings. Also, cost reductions could be expected to result from equipment improvements which would reduce the holdup of uranium, thorium, and D_2O in the external system. The effect of thorium concentration upon cost for several values of specific power in the external system is shown in Fig. 35. Results are presented for slurry

TABLE 15. SUMMARY OF REACTOR FUEL COSTS

Conditions: 450-Mw reactor
6-ft-dia core
2-ft-thick blanket of 1000 g of Th per liter

	Operated at 250°C	Operated at 300°C
Fuel cost, mills/kwhr		
One reactor per chemical plant	3.7	3.3
Three reactors per chemical plant	2.3	2.0
Six reactors per chemical plant	1.9	1.7
Asymptotic cost	1.6	1.4

blankets and for "fluidized-solids" blankets containing optimum concentrations of U^{233}. The fluidized-solids blanket is intended to represent any blanket in which both the thorium and the uranium are retained in the blanket while only the D_2O circulates through the heat exchangers.

The distribution of costs for the two-region reactor with a specific power of 20 kw/liter in the core circulating system and 14 kw/liter in the blanket slurry circulating system is compiled in Table 16. This table shows that minimum costs for the slurry blanket are obtained with the slurry containing 1000 g of thorium per liter by balancing the inventory charges against the breeding gains. In more dilute blankets, although the inventory charges are less, the breeding gains are so low that very little credit is received for excess U^{233}, while the greater breeding gain in more concentrated blankets is not sufficient to compensate for the larger inventory.

There may be little real variation in fuel cost for circulating slurries of concentrations from 500 to 1000 g/liter. Some increase of breeding gain can be achieved by making the dilute blankets thicker, but it is largely overshadowed by the increased inventory charges. It seems reasonable to suppose, however, that the permissible fluid velocities will increase as the slurry concentration diminishes, and therefore systems that contain dilute slurries can be operated at higher specific power in the heat exchanger equipment, resulting in costs the

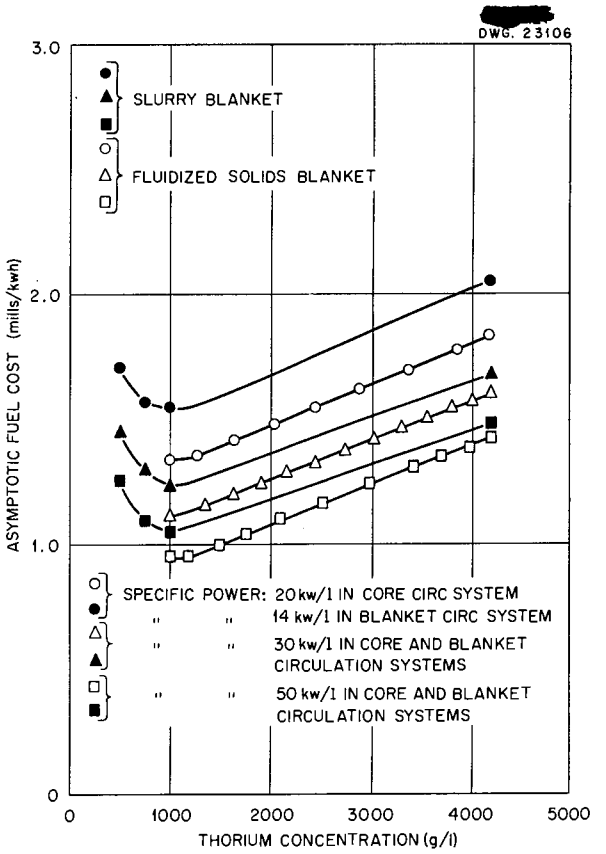

Fig. 35. Asymptotic Fuel Costs for Two-Region Breeders Operated at 250°C.

same as those for slurries containing 1000 g of thorium per liter.

As the total power of the reactor station is increased, there may be some advantage in increasing the core size and total power output per reactor. A reactor with an 8-ft-dia core and a 2-ft-thick blanket operated at a power of 100 kw/liter in the core will have very nearly the same breeding gain (for the same core-tank thickness) and the same ratio of power in the blanket to power in the core (for the same concentrations of U^{233} and thorium) as the reactors discussed above. This means that the reactor with an 8-ft-dia core would operate at approximately 2.2 times the power of the reactor with a 6-ft-dia core, while containing only 1.8 times as much D_2O in the reactor vessel. Much of the inventory is in external systems which would not be affected by the greater specific power; so the net difference in inventory and inventory charges would be only 10 to 12%. Clearly, the present

TABLE 16. COST DISTRIBUTION FOR TWO-REGION BREEDER REACTORS OPERATED AT 250°C*

	CONCENTRATION OF THORIUM IN BLANKET			
	500 g/liter	750 g/liter	1000 g/liter	4200 g/liter
Concentration of U^{233} in blanket,** g/kg Th	3	3	3	2
Concentration of U^{233} in core, g/liter	1.23	1.28	1.32	1.43
Poison level in core, $\frac{\text{neutrons absorbed in poison}}{U^{233}\text{ atoms consumed in core}}$	0.075	0.075	0.075	0.075
Breeding gain, $\frac{U^{233}\text{ atoms produced}}{U^{233}\text{ atoms consumed in core}} - 1$	0.02	0.09	0.12	0.16
Total power, Mw of heat	400	400	400	360
Net Mw of electricity	94	94	94	84
Total U^{233} requirement, kg	77	87	100	160
Total Th requirement, metric tons	11	16	20	67
Total D_2O requirement, metric tons	41	41	41	38
Costs, $/day				
Thorium consumption (C_1)	11	11	11	11
CaF_2 processing of core (C_2)	190	190	190	190
Thorex processing of core (C_3)	280	280	280	280
Thorex processing of blanket (C_4)	580	670	700	940
D_2O recovery (C_5)	55	45	35	15
Uranium and thorium losses ($L_1 + L_2$)	18	19	20	21
Uranium inventory (I_1)	630	710	820	1310
Thorium inventory (I_2)	100	140	180	600
D_2O inventory and losses (I_3)	2100	2100	2100	1930
Value of excess U^{233} produced (V)	140	640	850	1140
Net cost, $/Mwd of heat	9.6	8.8	8.7	11.6
mills/kwhr of electricity	1.71	1.57	1.55	2.06

*Specific power in core and blanket circulating systems respectively are 20 and 14 kw/liter.

**Concentration of U^{233} to give minimum cost for given thorium concentration.

choice of a reactor size must be based upon engineering judgement rather than upon known economic factors.

There are indications that minimum costs can be achieved with fluidized-solids – or possibly boiling-slurry – blankets. The fluidization of thorium oxide pellets in the concentration range of 1000 to 4000 g/liter (53) appears to be practicable. As only the D_2O per se circulates through the heat exchangers in such systems, they should result in minimum inventories for the system as a whole.

With the reactor operating at 250°C, total fuel costs in the range of 1.0 to 1.2 mills/kwhr appear to be feasible. By operation at 300°C, this cost should be reduced to 0.9 to 1.1 mills/kwhr.

Total Power Costs

Total power costs for two-region power breeders of conservative design, operated with a plant factor of 0.8, and the relationship of these costs to plant

size are shown in Table 17. They range from a high of 9 mills/kwhr for a single reactor operated at 250°C to 6.3 and 5.9 mills/kwhr for asymptotic costs at 250 and 300°C, respectively. Power costs for the small stations can be made to approach the asymptotic costs by proper design of a combined reactor and chemical plant or possibly by shipping fuels to a large, central chemical plant for reprocessing. By designing the system so as to minimize the inventory of D_2O, U^{233}, and Th, it may be possible to reduce the cost to 5.5 mills/kwhr in large installations operated at 300°C.

ONE-REGION POWER BREEDER

Fixed Charges and Operating and Maintenance Costs

Comparison of the cost data in Tables 6 and 8 for one- and two-region reactors reveals no cost differences which could result in significant differences in fixed charges on stations in the range of 500 to 2700 Mw of heat. Since the operating and maintenance costs used here are related to the fixed charges, they will be the same as the costs for the two-region reactor also. Representative charges for one-region reactors can be taken from Figs. 32 and 33 for two-region reactors.

Fuel Costs

The composition of fuel costs for the one-region breeder reactors is similar to that outlined previously for the two-region reactors. Calculation of the costs differs in that there is only one chemical processing cycle. Thorex is used for all the processing. All inventory charges are based upon steady operating conditions, assuming that the entire inventory of U^{233} in reactor and chemical plants, or its equivalent in U^{235}, must be purchased to start the reactor. The initial perturbations in inventory that occur as the reactor approaches steady-state conditions appear to be unimportant.

Table 18 contains data showing the composition of fuel costs for a 15-ft-dia reactor operating at 250°C with average specific powers from 5 to 50 kw/liter for reactor and circulating system. Neutron balances are presented in Table 19. The reactors were assumed to contain 200 g of thorium per liter and a poison fraction near 0.07. For reactors in the range of 10 to 20 ft in diameter containing 100 to 400 g of thorium per liter, the effect of poison level on cost showed a fairly flat minimum over the range of 0.07 to 0.09.

The lower breeding gain at high specific power results from the higher protactinium losses. Chemical processing costs were calculated upon the basis of $3.00 per kilogram of thorium processed. The fixed charge on the chemical plant is not included in these costs.

Figure 36 shows the relationship between cost, specific power, and thorium concentration for 15-ft-dia reactors operated at 250°C with a poison fraction

TABLE 17. TOTAL POWER COST FOR TWO-REGION BREEDER REACTOR STATIONS*

	REACTOR OPERATING TEMPERATURE							
	250°C				300°C			
Number of reactors	1	3	6	∞**	1	3	6	∞**
Power, Mw of heat	450	1350	2700	∞	450	1350	2700	∞
Net Mw of electricity	105	316	632	∞	123	370	740	∞
Fixed charge on investment, mills/kwhr	4.4	4.0	3.9	3.9	4.2	3.9	3.8	3.8
Operating and maintenance, mills/kwhr	0.9	0.8	0.8	0.8	0.8	0.7	0.7	0.7
Fuel cost, mills/kwhr	3.7	2.3	1.9	1.6	3.3	2.0	1.7	1.4
Total cost	9.0	7.1	6.6	6.3	8.3	6.6	6.2	5.9

*Reactors have blankets containing 1000 g of thorium per liter, approximately 5 g of U^{233} per kilogram of thorium, and other characteristics similar to those of reactors in Table 14 for 250°C operation. Effect on fuel cost of increasing temperature to 300°C is taken from Table 15.

**Asymptotic cost.

TABLE 18. EFFECT OF SPECIFIC POWER ON FUEL COSTS AND COST COMPONENTS FOR A 15-ft-dia, ONE-REGION POWER BREEDER OPERATED AT 250°C

	AVERAGE FLUX [(neutrons/cm^2·sec) × 10^{-14}]			
	0.5	1.0	2.0	4.0
Average specific power, kw/liter	5.3	10.9	22.5	46.6
Concentration of Th, g/liter	200	200	200	200
Concentration of $U^{233} + U^{235}$, g/liter	3.46	3.54	3.65	3.77
Poison, $\frac{\text{neutrons absorbed in poison}}{U^{233}\text{ atoms consumed}}$	0.07	0.07	0.07	0.07
Breeding gain, $\frac{U^{233}\text{ atoms produced}}{U^{233}\text{ atoms consumed}} - 1$	0.0412	0.0201	−0.0081	−0.0387
Costs, $/Mwd of heat				
Thorium consumption	0.026	0.025	0.025	0.024
Chemical processing	0.449	0.435	0.426	0.412
D_2O recovery	0.262	0.254	0.249	0.240
Uranium and thorium losses	0.055	0.055	0.055	0.055
Uranium inventory	5.970	3.271	1.972	1.306
Thorium inventory	0.378	0.202	0.118	0.076
D_2O inventory and losses	10.552	5.104	2.501	1.209
Value of excess U^{233} produced	1.227	0.446	−0.179	−0.845
Net cost, $/Mwd of heat	16.468	8.899	5.525	4.167
mills/kwhr of electricity	2.93	1.60	0.98	0.74
Net cost if uranium value is $40/g, $/Mwd of heat	21.264	11.775	7.729	6.371
mills/kwhr of electricity	3.79	2.12	1.38	1.13

of 0.07. As the thorium concentration is increased, the critical concentration of U^{233} and the breeding gain increase. The importance of inventory charges decreases with increasing specific power so that it becomes profitable to increase the inventory to maintain a positive breeding gain at high specific power. Minimum costs are found under conditions where the concentrations of uranium and thorium yield only a small excess of U^{233}. As the concentration is increased to achieve higher breeding gains, the inventory charges rise more rapidly than does the credit for excess U^{233} produced. Decreasing the concentrations reduces the inventory charges, but the cost of U^{233} that must be supplied to the reactor to compensate for the negative gain increases more rapidly.

Similar studies were made for 10- and 20-ft-dia reactors operated at 250°C. Results of those studies and data from Fig. 36 are presented in Fig. 37 to show minimum fuel costs and the corresponding thorium concentrations as they are related to specific power. Numerical data are compiled in Table 20. They include costs for U^{233} valued at $20 and $40 per gram. Since the lowest fuel costs are obtained with little or no breeding, they vary significantly with the value of U^{233}. The difference in fuel costs for the three reactor sizes operated at the same specific power, thorium con-

TABLE 19. NEUTRON BALANCES FOR 15-ft-dia, ONE-REGION REACTOR

Conditions: 200 g of thorium per liter
7% poison
250°C

	AVERAGE FLUX [(neutrons/cm^2·sec) × 10^{-14}]				
	0.5	1.0	1.5	2.0	4.0
Average specific power, kw/liter	5.3	10.9	16.7	22.5	46.6
Concentration of $U^{233} + U^{235}$, g/liter	3.46	3.54	3.60	3.65	3.78
Breeding gain	0.04	0.02	0.00	-0.01	-0.04
Absorptions by Th^{232} (resonance)	0.309	0.309	0.309	0.309	0.309
Th^{232} (slow)	0.747	0.737	0.730	0.724	0.709
Pa^{233}	0.015	0.026	0.034	0.041	0.057
U^{233}	1.000	1.000	1.000	1.000	1.000
U^{234}	0.105	0.116	0.125	0.131	0.147
U^{235}	0.105	0.116	0.125	0.131	0.147
U^{236}	0.016	0.018	0.019	0.020	0.023
Fission products	0.070	0.070	0.070	0.070	0.070
D_2O	0.011	0.011	0.011	0.011	0.011
Leakage: Fast	0.079	0.079	0.079	0.079	0.079
Slow	0.066	0.066	0.065	0.065	0.064

centration, and poison level results from differences in credit for excess U^{233} produced (breeding gain) and U^{233} inventory charge (U^{233} concentration). The breeding gain increases and the U^{233} concentration decreases with increasing diameter. None of the 10-ft-dia reactors included on the curve have a positive breeding gain. However, when operating at low total power, supplying U^{233} or U^{235} to a 10-ft-dia reactor is cheaper than paying the inventory charges on the larger amount of material required in 10-, 15-, or 20-ft-dia reactors that can breed. It is doubtful that reactors based upon the thorium cycle and having conversion ratios less than 1 could constitute an important fraction of a large power industry.

The substitution of thorium nitrate containing N^{15} for thorium oxide results in a significant increase in power cost. If it is assumed that the reactor must have a conversion ratio of at least 1, the thorium concentration probably must be greater than 100 g/liter in 15-ft-dia reactors and greater than 75 g/liter in 20-ft-dia reactors. The value of the N^{15} in a liter of solution containing 100 g of thorium is $130. Assuming the same inventory and loss basis that is used for D_2O, the inventory charges on the N^{15} would be equivalent to 1 mill/kwhr for a 15-ft-dia reactor and the associated circulating system operated at a power of 1350 Mw at 250°C. This does not include the cost of inventory and the added costs of handling the N^{15} in the chemical plant. Use of N^{15} in one-region reactors could prove to be economical if the cost were $1 to $2 per gram.

The relationship between fuel cost and total power is shown in Fig. 38 for 10-, 15-, and 20-ft-dia slurry reactors operated at 250°C with specific powers of 16 and 30 kw/liter in the external system and with U^{233} valued at $20/gram. A value of 16 kw/liter is obtained by using the data from the section, "One-Region, 1350-Mw, Reactor Power Plant;" 30 kw/liter in the external system represents an advanced design.

There is no one reactor size that will yield a minimum fuel cost over the entire range of 675 to 2700 Mw of heat. Minimum fuel costs are obtained with a reactor nearly 15 ft in diameter in the 1350-Mw base plant. Smaller reactors are more economical at lower powers and larger reactors are

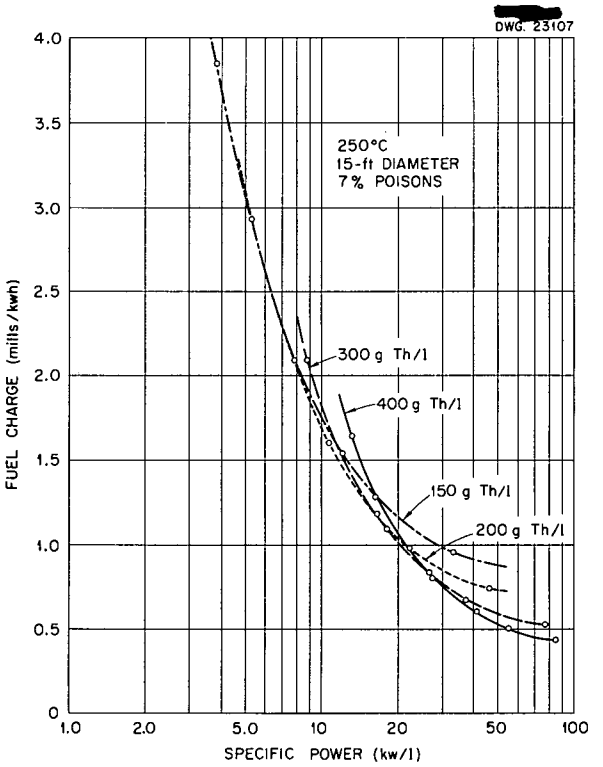

Fig. 36. Effect of Thorium Concentration and Specific Power on Fuel Cost for One-Region Power Breeder.

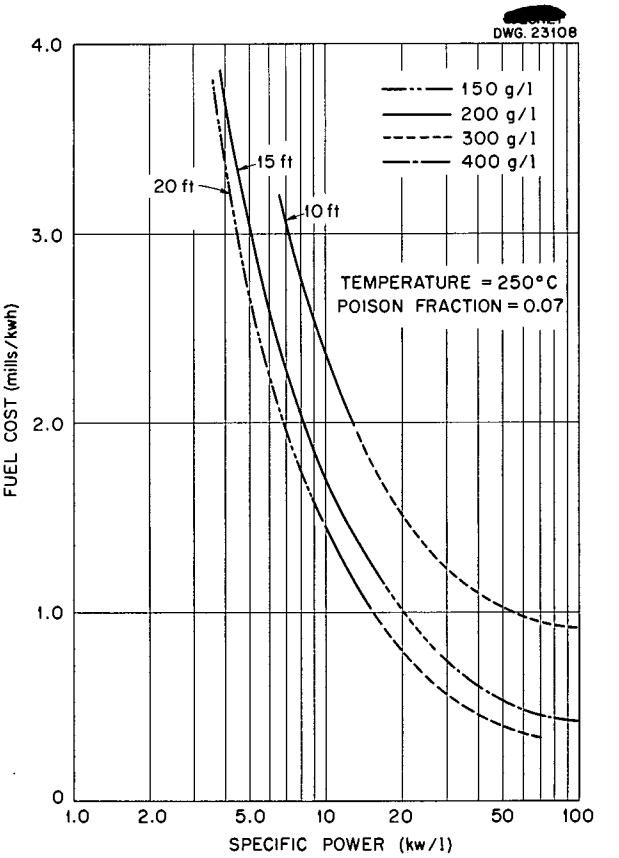

Fig. 37. Minimum Fuel Costs for One-Region Power Breeder Reactors.

more economical at higher powers. However, the advantage gained by changing reactor size is small enough that fuel costs for a 15-ft-dia reactor can be considered as representative of one-region power breeders in the range of 675 to 2700 Mw.

Fuel costs for 15-ft-dia reactors operated over a range of powers at 250 and 300°C are shown in Fig. 39. Although the neutron losses are greater at the higher temperature, the increased efficiency of the turbogenerator plant more than compensates for the loss of breeding gain. Included in Fig. 39 is a curve representing the contribution to the fuel cost of the fixed charge of $5000/day on the chemical plant, assuming that a plant is provided for each reactor and neglecting the gains that might be realized by combining reactor and chemical plants.

Total Power Costs

Total power costs for the 15-ft-dia, one-region power breeder designed as discussed in the section, "One-Region, 1350-Mw, Reactor Power Plant" and operated with a plant factor of 0.8 are shown in Table 21. They range from a high of 8.9 mills/kwhr (including fixed charges on the chemical plant) for a plant operated at 250°C and producing 158 Mw of electricity to 5.9 mills/kwhr (asymptotic chemical processing cost) for a plant operated at 300°C and producing 636 Mw of electricity. By designing the reactor system for lower holdup in the heat removal equipment, it may be possible to reduce the 5.9 mills/kwhr to 5.5 mills/kwhr. There is no evident, significant difference in the ultimate cost of power from either one-region or two-region breeder reactor stations.

ONE-REGION, URANIUM-PLUTONIUM REACTORS

Fixed Charges and Operating and Maintenance Costs

Fixed charges and operating and maintenance costs for the one-region, U-Pu reactors should be equal to those assessed against the one-region

TABLE 20. COMPONENTS OF FUEL COST FOR 10-, 15-, AND 20-ft-dia, ONE-REGION POWER BREEDERS OPERATED AT 250°C

	REACTOR DIAMETER								
	10 ft			15 ft			20 ft		
Average specific power, kw/liter	6.47	32.72	91.56	5.34	27.61	55.88	3.57	10.19	35.202
Average flux, (neutrons/cm^2·sec) $\times 10^{-14}$	0.5	1.5	4.0	0.5	1.5	2.0	0.5	1.0	2.0
Concentration of Th, g/liter	200	300	300	200	300	400	150	200	300
Concentration of $U^{233} + U^{235}$, g/liter	4.196	7.075	7.425	3.46	5.971	9.062	2.316	3.306	5.709
Poison, $\frac{\text{neutrons absorbed in poison}}{U^{233}\text{ atoms consumed}}$	0.07	0.07	0.07	0.07	0.07	0.07	0.07	0.07	0.07
Breeding gain, $\frac{U^{233}\text{ atoms produced}}{U^{233}\text{ atoms consumed}} - 1$	−0.1016	−0.0851	−0.1225	0.0412	0.0328	0.0350	0.0784	0.0764	0.0666
Cost, $/Mwd of heat									
Thorium consumption	0.023	0.023	0.022	0.026	0.026	0.026	0.027	0.027	0.027
Chemical processing	0.371	0.330	0.315	0.449	0.391	0.344	0.504	0.471	0.409
D_2O recovery	0.216	0.128	0.122	0.262	0.152	0.100	0.392	0.275	0.159
Uranium and thorium losses	0.055	0.054	0.054	0.055	0.055	0.055	0.055	0.055	0.055
Uranium inventory	5.971	2.417	1.306	5.970	2.417	1.973	6.027	3.307	1.973
Thorium inventory	0.312	0.113	0.058	0.378	0.134	0.096	0.425	0.219	0.114
D_2O inventory and losses	8.709	1.722	0.615	10.552	2.041	1.008	15.784	5.530	1.601
Value of excess U^{233} produced	−2.301	−1.899	−2.689	1.227	0.730	0.744	1.773	1.710	1.471
Net cost, $/Mwd of heat	17.958	6.687	5.182	16.468	4.486	2.827	21.389	8.174	2.866
mills/kwhr of electricity	3.20	1.19	0.92	2.93	0.80	0.50	3.81	1.45	0.51
Net cost if uranium value is $40/g, $/Mwd of heat	26.275	11.055	9.230	21.264	6.226	4.078	25.640	9.822	3.420
mills/kwhr of electricity	4.68	1.97	1.64	3.79	1.11	0.73	4.56	1.75	0.61

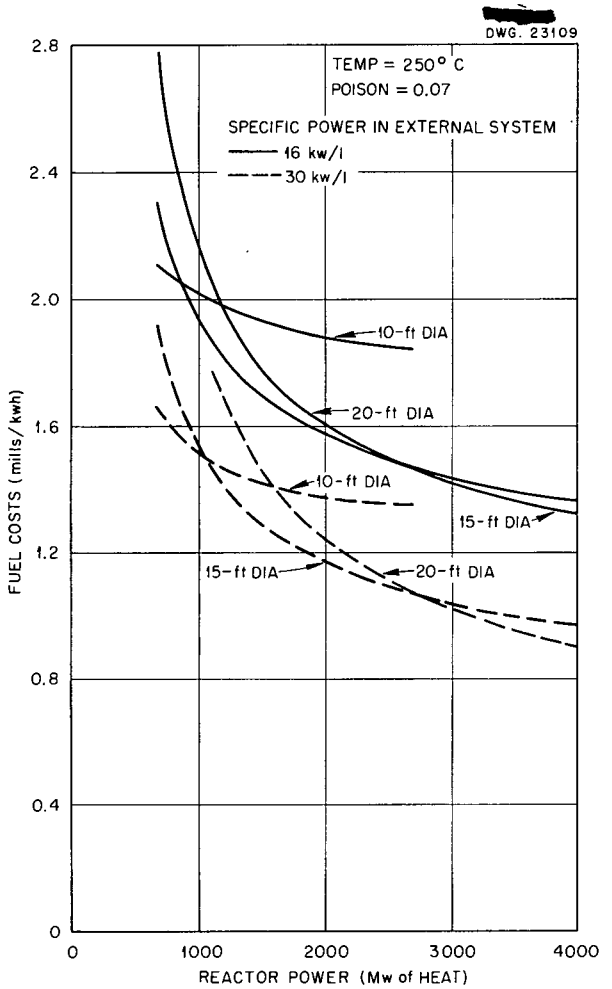

Fig. 38. Effect of Total Reactor Power on Fuel Cost for One-Region Power Breeder.

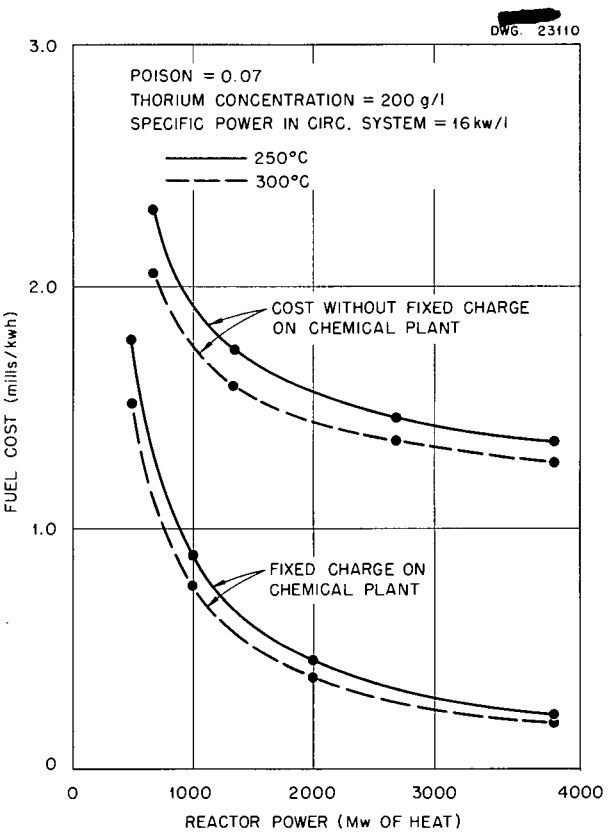

Fig. 39. Fuel Costs for 15-ft-dia, One-Region Power Breeder.

power breeders. Both types of reactors are assumed to have slurry fuels; so the reactors and their materials of construction should be similar. Fixed charges and maintenance costs for power stations employing solution fuels may not be greatly different. Although carbon steel equipment lined with titanium for handling concentrated uranyl sulfate solutions in the high-pressure fuel system would be very expensive today, it seems reasonable to expect the cost to approach that of stainless steel equipment as the titanium technology develops.

Fuel Costs

Composition of Fuel Costs. Costs were estimated for fuels containing steady-state concentrations of U^{235}, U^{236}, U^{238}, Pu^{239}, Pu^{240}, and Pu^{241}; all other higher isotopes were assumed to be removed in the chemical processing. Although many of the reactors examined required steady-state concentrations of U^{235} less than the 0.71% in natural uranium, minimum fuel costs were still obtained when the reactor wastes were re-enriched in a diffusion plant.

The fuel cycle is shown in Fig. 40. Slurry is removed from the reactor at the rate required to maintain a specified poison level. The fuel is separated from the D_2O, cooled for 20 days while the neptunium decays, and partially decontaminated in a Purex plant. Part of the fuel is then sent directly to the reactor feed preparation equipment. Plutonium is separated from the remainder of the uranium and added to the reactor feed. The uranium is completely decontaminated, stored for 100 days until the U^{237} decays, and sent to the diffusion plant. New reactor feed material from a 30-day reserve is returned to the reactor.

Total fuel costs are divided into components

TABLE 21. TOTAL POWER COST FOR 15-ft-dia, ONE-REGION BREEDER REACTORS

	REACTOR OPERATING TEMPERATURE					
	250°C			300°C		
Reactor power, Mw of heat	675	1350	2700	675	1350	2700
Mw of electricity	158	316	632	185	370	740
Total D_2O inventory, metric tons	107	153	246	107	153	246
Total Th inventory, metric tons	23	34	56	23	34	56
Total U^{233} inventory, kg	400	600	1000	430	650	1080
Average specific power, kw/liter (heat)	7.0	9.7	12	7.0	9.7	12
Fixed charge on investment, mills/kwhr	4.4	4.0	3.9	4.2	3.9	3.8
Operating and maintenance, mills/kwhr	0.9	0.8	0.8	0.8	0.7	0.7
Fuel cost, mills/kwhr						
With fixed chemical processing charge	3.6	2.4	1.8	3.2	2.2	1.7
Without fixed chemical processing charge	2.3	1.7	1.5	2.1	1.6	1.4
Total cost, mills/kwhr						
With fixed chemical processing charge	8.9	7.2	6.5	8.2	6.8	6.2
Without fixed chemical processing charge	7.6	6.5	6.2	7.1	6.2	5.9

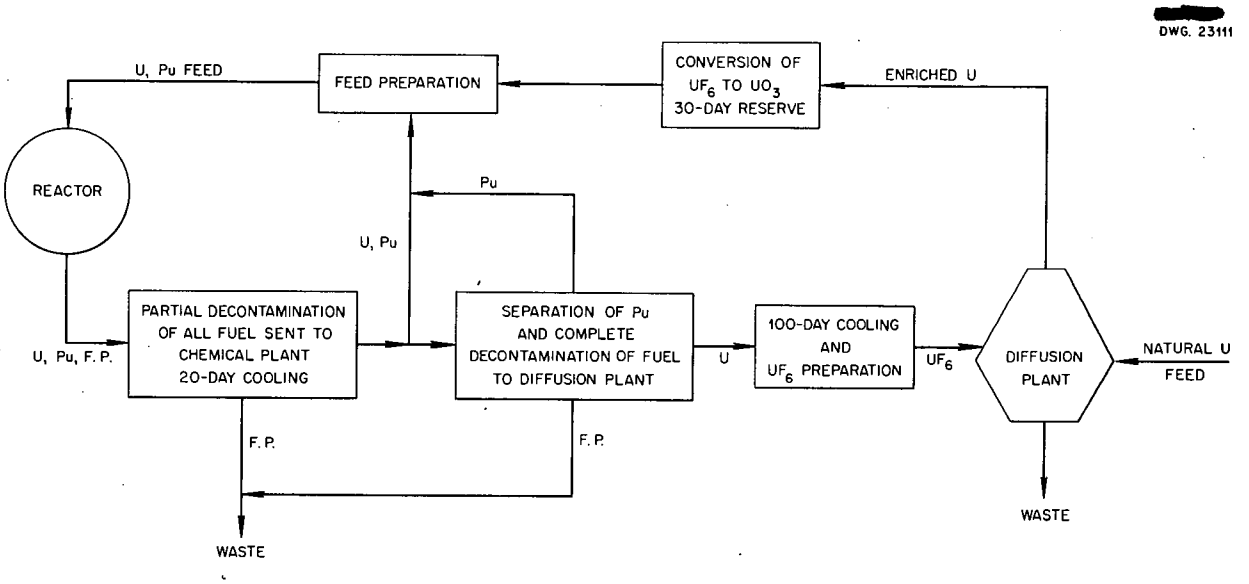

Fig. 40. Fuel Cycle for One-Region, U-Pu Reactor.

similar to those used in the analysis of costs for the thorium-fueled reactors. They are as follows:

1. feed cost, which includes the value of the material as UF_6 in the diffusion plant, a cost of \$0.20 per gram of U^{235} content for converting the UF_6 to reactor feed, and an inventory charge for holding the material in reserve for 30 days,
2. fuel decontamination, which consists of partial decontamination at \$3.00 per kg of uranium and complete decontamination at \$3.50 per kg of uranium (\$5000/day fixed chemical processing charge is not included),
3. D_2O recovery, which includes removal of D_2O from the fuel at a cost of \$0.35 per liter,
4. fuel inventory, includes uranium in the reactor and the chemical plant assumed to have cost an amount equal to the value of material of the same enrichment[1] in the diffusion plant plus the conversion cost, plutonium assumed to have a value of \$20 per gram of fissionable isotope, and inventory charges based upon a 12% annual charge against the cost of the uranium and plutonium in the reactor and the chemical plant,
5. D_2O inventory and losses, calculated as a 17% annual charge against the weight of D_2O contained in the reactor and the circulating system at 20°C,
6. credit for uranium removed, includes uranium returned to the diffusion plant assumed to have a value equal to the value of material of the same enrichment in the diffusion plant minus a conversion charge of \$0.50 per gram of U^{235} content and an inventory charge for holding the material for 100 days.

Calculations showed little change in fuel cost for poison fractions – ratio of total poison cross section to total fission cross section – in the range of 0.04 to 0.09. Also, there was little change in cost for values of γ/ϕ – ratio of fraction of fuel returned to the diffusion plant per second to the neutron flux – from 2×10^{-22} to 8×10^{-22}. Values of 0.07 and 5×10^{-22} were used respectively for the poison fraction and for γ/ϕ in the calculation of the effects of other variables on the fuel costs.

Total Fuel Costs. The variation of fuel cost with ratio of moderator to uranium (β), specific power, operating temperature, and reactor size is shown in Fig. 41. Numerical data for several of the reactors and the distribution of fuel costs are presented in Table 22. Minimum fuel costs are obtained with uranium concentrations in the range of 170 to 200 g/liter. Net feed cost and inventory charges on the plutonium and D_2O in the reactors are major contributors to the fuel cost. No significant reduction in fuel cost is realized by increasing the temperature from 250 to 300°C; the increase in thermal efficiency of the power plant is offset by an increase in feed and inventory costs.

Figure 42 shows the relationship between total reactor power and fuel cost for 15- and 20-ft-dia reactors with heat removal rates of 16 and 30 kw/liter in the external circulating and heat removal equipment. Included are curves representing the contribution to the fuel cost of the \$5000/day fixed chemical processing charge, assuming that a plant is provided for each reactor and neglecting reductions in costs that might be realized by combining reactor and chemical plants. The curves are similar to those obtained for the one-region, Th-U^{233} breeder reactors, and the importance of inventory charges is equally evident. Reactors 15 ft in diameter appear to be near the optimum size for producing heat in the range of 1000 to 3000 Mw.

The fuel cost for a 15-ft-dia reactor operating at 250°C with a concentration of 200 g of uranium per liter can be expressed as

$$\text{Cost in mills/kwhr} = 1.13 + \frac{2.6}{P_s} + \frac{10}{P_s} ,$$

where

net feed cost + chemical processing and chemical plant inventory charges $= 160$,

fuel inventory in reactor $= 2.6/P_s$,

D_2O inventory and losses $= 10/P_s$.

About three-fourths of the fuel inventory is a charge against the plutonium.

The D_2O inventory and loss charges are calculated upon the basis of a 17% annual charge against the D_2O inventory valued at \$40/lb. No such basis has been defined for the charge against the fertile and fissile materials in the reactor and the chemical plants. For the thorium breeder reactors, the inventory charges were based upon the cost of establishing the inventory in the reactor and the chemical plant. This direct approach seems simple and reasonable because thorium contains no fissionable isotope. Uranium-233 or U^{235} must be purchased at a cost of \$20 to \$40/g to establish the inventory of fissionable material.

[1] R. B. Briggs, *Supplement to Report ORNL-1642, Aqueous Homogeneous Reactors for Producing Central-Station Power*, ORNL CF-54-2-8 (to be published).

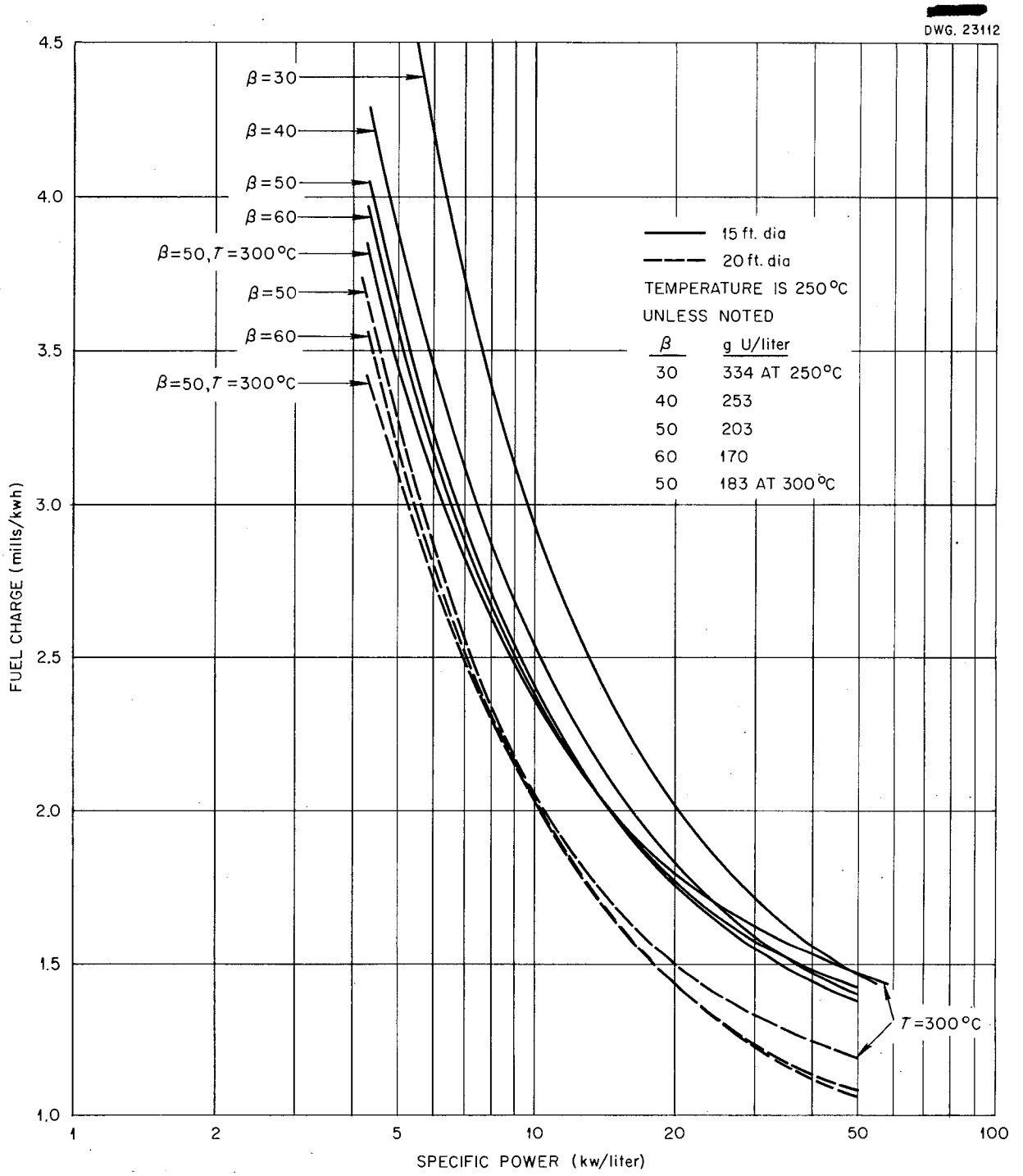

Fig. 41. Effect of Uranium Concentration, Temperature, and Specific Power on Fuel Cost for One-Region, U-Pu Reactors.

TABLE 22. REACTOR CHARACTERISTICS AND FUEL CHARGES FOR ONE-REGION, URANIUM-PLUTONIUM REACTORS

Conditions: Oxide slurry in D_2O
Poison = 0.07
$\gamma/\phi = 5 \times 10^{-22}$

	REACTOR DIAMETER							
	15 ft					20 ft		
Reactor temperature, °C	250	250	250	250	300	250	250	300
β	30	40	50	60	50	50	60	50
Uranium concentration, g/liter	334	253	203	170	183	203	170	183
U^{235} concentration, g/liter	2.65	1.47	1.04	0.83	1.35	0.77	0.61	0.98
U^{236} concentration, g/liter	0.39	0.22	0.15	0.12	0.20	0.11	0.09	0.15
Pu^{239} concentration, g/liter	3.43	1.74	1.13	0.84	1.08	1.05	0.78	0.99
Pu^{240} concentration, g/liter	3.39	1.72	1.12	0.83	1.17	1.04	0.77	1.06
Pu^{241} concentration, g/liter	1.21	0.61	0.40	0.30	0.41	0.37	0.28	0.38
Initial enrichment (no Pu), N_{25}/N_U	0.0116	0.0106	0.0100	0.0098	0.0140	0.0088	0.0086	0.0118
Steady-state enrichment, N_{25}/N_U	0.0081	0.0059	0.0052	0.0050	0.0073	0.0039	0.0037	0.0054
Steady-state feed enrichment, N_{25}/N_U	0.0153	0.0113	0.0100	0.0096	0.0136	0.0074	0.0070	0.0100
Processing rate,[a] kg U per Mwd	0.0797	0.1161	0.1407	0.1558	0.1211	0.1598	0.1777	0.1416
Removal rate,[b] kg U per Mwd	0.0421	0.0614	0.0744	0.0823	0.0640	0.0844	0.0939	0.0749
Fraction of fissions in U^{235}	0.24	0.25	0.27	0.29	0.31	0.23	0.24	0.27
Fraction of U consumed[c]	0.018	0.017	0.016	0.015	0.014	0.019	0.018	0.016
Cost, $/Mwd of heat								
Feed cost – credit for U returned to diffusion plant	5.66	5.56	5.43	5.62	7.35	3.66	3.62	5.49
Fuel decontamination	0.26	0.38	0.46	0.51	0.40	0.52	0.58	0.46
D_2O recovery	0.08	0.16	0.24	0.32	0.23	0.28	0.37	0.27
Fuel inventory in reactor	46.1/P	22.2/P	14.4/P	10.6/P	15.9/P	11.6/P	9.3/P	13.0/P
Fuel inventory and losses in chemical plant	0.22	0.20	0.20	0.19	0.21	0.20	0.19	0.20
D_2O inventory and losses	56.3/P	56.3/P	56.3/P	56.3/P	56.3/P	56.3/P	56.3/P	56.3/P
Net fuel cost, $/Mwd of heat	6.22+ 102/P	6.30+ 78.5/P	6.33+ 70.7/P	6.64+ 67.0/P	8.19+ 72.3/P	4.66+ 67.9/P	4.76+ 65.6/P	6.42+ 69.3/P
mills/kwhr of electricity	1.11+ 18.2/P	1.12+ 14.0/P	1.13+ 12.6/P	1.18+ 11.9/P	1.25+ 11.0/P	0.83+ 12.1/P	0.85+ 11.7/P	0.98 10.5/P

[a]Uranium sent to chemical plant for fission-product removal.

[b]Uranium sent from chemical plant to diffusion plant for re-enriching.

[c]Depletion in diffusion plant to $N_{25}/N_U = 0.0025$ is assumed; all processing losses are neglected.

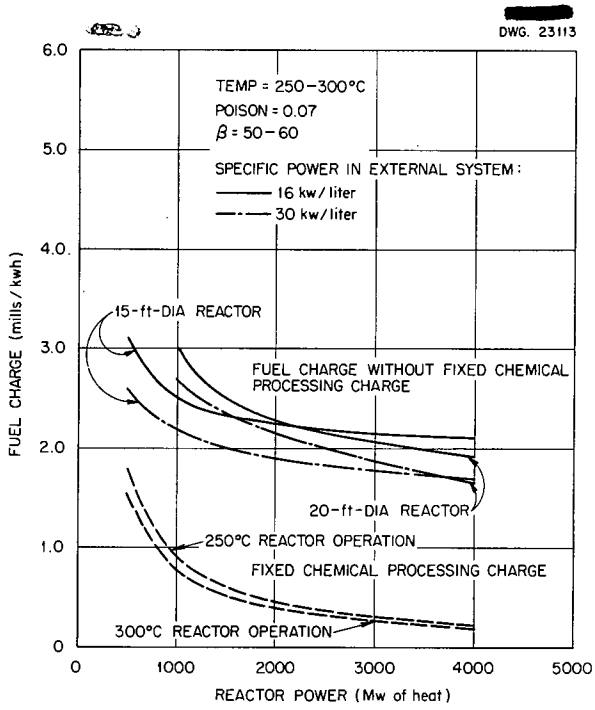

Fig. 42. Effect of Total Reactor Power on Fuel Cost for One-Region, U-Pu Reactors.

In determining the inventory charges and fuel costs for the one-region, U-Pu reactors, only steady-state conditions were considered. The uranium was evaluated at its replacement cost – the value of UF_6 of the same enrichment plus the conversion cost. Plutonium in the reactor was assumed to have a replacement cost or a value of $20 per gram of fissionable material; whether this is a good inventory value for plutonium may be academic. Plutonium has value in the reactor as an intermediate in the consumption of U^{238}; fewer than one-third of the fissions occur in U^{235} under steady-state conditions. If plutonium were purchased to replace that in the reactor, the cost probably would be at least $20/g. Minimum fuel costs are obtained with reactors in which the fuel inventory charges are only one-fourth the D_2O inventory charges. Neglecting the plutonium inventory favors use of the higher uranium concentrations but results in large cost reductions for only those reactors which operate at low total (and specific) power, a particularly unfavorable condition for one-region reactors.

There is some argument for placing a lower value on the plutonium. For reactors where the initial conversion ratio is near 1, approximately 1 g of plutonium is produced for each gram of U^{235} consumed. If 25% of the reactor power is produced by fissioning of U^{235} under steady-state conditions, an additional 0.8 g of U^{235} is consumed during the unsteady-state period to build each gram of Pu^{239} inventory. Using natural or slightly enriched uranium as feed, the cost of the U^{235} burned is $10 to $15/g and the corresponding approximate cost of plutonium is $8 to $12/g. In determining the actual value, it would be necessary to study each reactor through the period of plutonium build-up. This has been done for a 15-ft-dia reactor containing 200 g of uranium per liter and operating at a constant power of 1350 Mw at 250°C. Concentrations of U^{235} and plutonium isotopes and the fraction of fissions that occurs in U^{235} are shown as functions of time in Fig. 43. The plutonium inventory in this case can be established by burning the initial charge of uranium containing 1% U^{235} down to the steady-state concentration of 0.5% U^{235}. The inventory charge would be the same if it were based on the cost of the initial charge of fuel or the cost of a charge of the steady-state concentration of U^{235} plus $9 per gram of fissionable plutonium.

There is some indication that η for Pu^{241} may be greater than 1.9, possibly as great as 2.4. The effect of η_{41} upon fuel cost is presented in Table 23. Increasing η_{41} from 1.9 to 2.4 results in a decrease in fuel cost from 2.4 to 1.8 mills/kwhr for a 15-ft-dia reactor operating at a power of 1350 Mw at 250°C. If η_{41} is as large as 2.4, the U^{235} content of the uranium is depleted in the reactor to 0.27% or to essentially the depletion assumed for the diffusion plants. The reactor would require services of the diffusion plant during only the first few months of operation.

Total Power Costs

Total power costs for 15-ft-dia, one-region, U-Pu reactors operated over a range of powers at 250 and 300°C are reported in Table 24. They are 0.7 mill/kwhr greater than those reported for the one-region breeder reactors given in Table 21. The minimum cost found was 6.7 mills/kwhr for a station operating at 300°C and producing 740 Mw of electricity.

By improving the heat removal rate in the external system from 16 to 30 kw/liter, the cost might be lowered to 6.3 mills/kwhr.

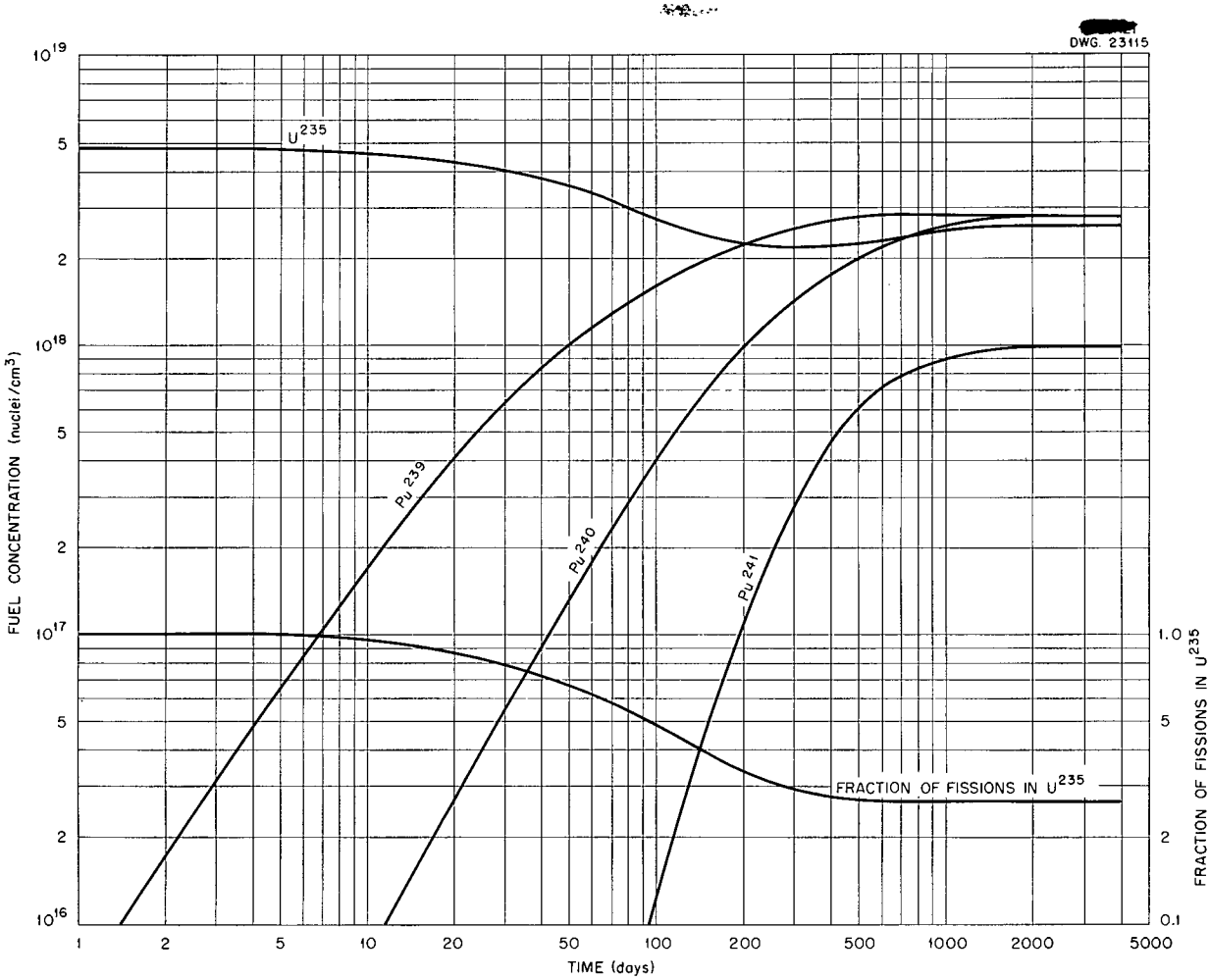

Fig. 43. Buildup of Plutonium Isotopes in 15-ft-dia Reactor.

TWO-REGION, URANIUM-PLUTONIUM REACTORS

Fixed Charges and Operating and Maintenance Costs

The fixed charges and operating and maintenance costs for the two-region, U-Pu reactors are obtained from Figs. 32 and 33.

Fuel Costs

Composition of Fuel Costs. The major advantage of the two-region configuration in the U-Pu system is that the presence of an enriched core permits a two-region reactor of given over-all diameter to be operated with a lower concentration of U^{235} in the uranium fuel, a smaller loss of neutrons by leakage from the reactor, and, therefore, lower fuel feed costs than can be obtained with a one-region reactor of the same diameter. None of the U-Pu–fueled, aqueous homogeneous reactors which have been studied appear capable of breeding. However, it is possible, although not necessarily most economical, to operate a two-region reactor with such a low steady-state concentration of U^{235} in the blanket that natural uranium can be fed to the reactor and the waste discarded, thus eliminating the necessity for an enriching plant.

In studying the two-region, U-Pu systems for producing power, it has been assumed that a reactor consists of a core in which plutonium is burned and which is surrounded by a blanket containing both uranium and plutonium. Excess neutrons from the core are captured in U^{238} in the blanket to produce plutonium. Additional power and production of plutonium results from fissioning of U^{235} and plutonium in the blanket. Since the reactors

TABLE 23. EFFECT OF η FOR Pu^{241} ON FUEL COST FOR 15-ft-dia REACTOR AT 250°C

	η_{41}		
	1.9	2.2	2.4
Uranium concentration, g/liter	203	203	203
U^{235} concentration, g/liter	1.04	0.73	0.55
Pu^{239} concentration, g/liter	1.13	1.06	1.02
Pu^{240} concentration, g/liter	1.12	1.05	1.01
Pu^{241} concentration, g/liter	0.40	0.38	0.36
Fraction of fissions in U^{235}	0.269	0.216	0.176
Fraction of U consumed	0.016	0.020	0.025
Steady-state reactor enrichment, N_{25}/N_U	0.0052	0.0037	0.0027
Steady-state feed enrichment, N_{25}/N_U	0.0100	0.0070	0.0053
Net fuel cost for 1350-Mw reactor,* mills/kwhr (16 kw/liter in external system)	2.4	2.0	1.8

*Fixed chemical processing charge is neglected.

apparently will not breed, it is necessary to feed U^{235} into the blanket to maintain the concentration of fissionable material. The core is operated at a power which is governed by the core volume and the permissible specific power. Plutonium is extracted from the blanket and fed to the core to maintain its plutonium concentration. For a given core power and diameter, the power in the blanket is determined by the thickness of the blanket and the concentrations of U^{238}, U^{235}, and plutonium. For a given U^{238} concentration and blanket thickness, the power and the net rate of production of plutonium in the blanket depend upon the ratio of U^{235} to plutonium. By balancing the concentrations of fissionable materials in the blanket, the net rate of production of plutonium in the blanket is made equal to the consumption in the core.

The use of uranium oxide slurries for the blanket fuels and plutonium oxide slurries for the core was assumed for lack of more certain fuel systems. The economics and nuclear calculations were made for obtaining a comparison of one-region and two-region, U-Pu reactors, assuming the technical feasibility of both.

The fuel cycle for the two-region, U-Pu reactor is shown in Fig. 44. Plutonium from the core is processed continuously through a Purex plant to maintain a constant poison fraction. Uranium from the blanket is also processed through the Purex plant at a rate required to maintain a given poison fraction or at the rate required to feed plutonium to the core. In all the reactors studied, it was found that the poison level was kept sufficiently low when the rate of withdrawal from the blanket was governed by the plutonium feed to the core. Minimum feed costs were obtained when all that uranium which was removed from the blanket for plutonium stripping was completely decontaminated and returned to a diffusion plant for re-enriching or discarded as waste if it contained less than 0.28% U^{235}. Although it was generally found to be possible to operate the reactors without an enriching plant, by using natural uranium feed to the blanket, there appeared to be a slight cost advantage in operating the reactors in conjunction with an enriching plant.

Fuel costs were divided into components similar to those used for the thorium breeder reactors. The basis for evaluating the costs was that described in a previous section on the one-region, U-Pu reactors. In addition, the cost of processing

TABLE 24. TOTAL POWER COST FOR 15-ft-dia, ONE-REGION, URANIUM-PLUTONIUM REACTORS

	REACTOR TEMPERATURE					
	250°C			300°C		
Reactor power, Mw of heat	675	1350	2700	675	1350	2700
Mw of electricity	158	316	632	185	370	740
Total D_2O inventory, metric tons	107	153	246	107	153	246
Total U inventory,* metric tons	32	53	83	25	41	72
Fraction of U^{235}	0.0052	0.0052	0.0052	0.0073	0.0073	0.0073
Total Pu inventory, kg	280	430	700	270	410	670
Fraction of $Pu^{239} + Pu^{241}$	0.56	0.56	0.56	0.56	0.56	0.56
Average specific power, kw/liter (heat)	7.0	9.7	12	7.0	9.7	12
Fixed charge on investment, mills/kwhr	4.4	4.0	3.9	4.2	3.9	3.8
Operating and maintenance, mills/kwhr	0.9	0.8	0.8	0.8	0.7	0.7
Fuel cost, mills/kwhr						
With fixed chemical processing charge	4.1	3.1	2.5	3.9	3.0	2.5
Without fixed chemical processing charge	2.8	2.4	2.2	2.8	2.4	2.2
Total cost, mills/kwhr						
With fixed chemical processing charge	9.4	7.9	7.2	8.9	7.6	7.0
Without fixed chemical processing charge	8.1	7.2	6.9	7.8	7.0	6.7

*Includes inventories in reactor and chemical plant but neglects reserve of enriched feed.

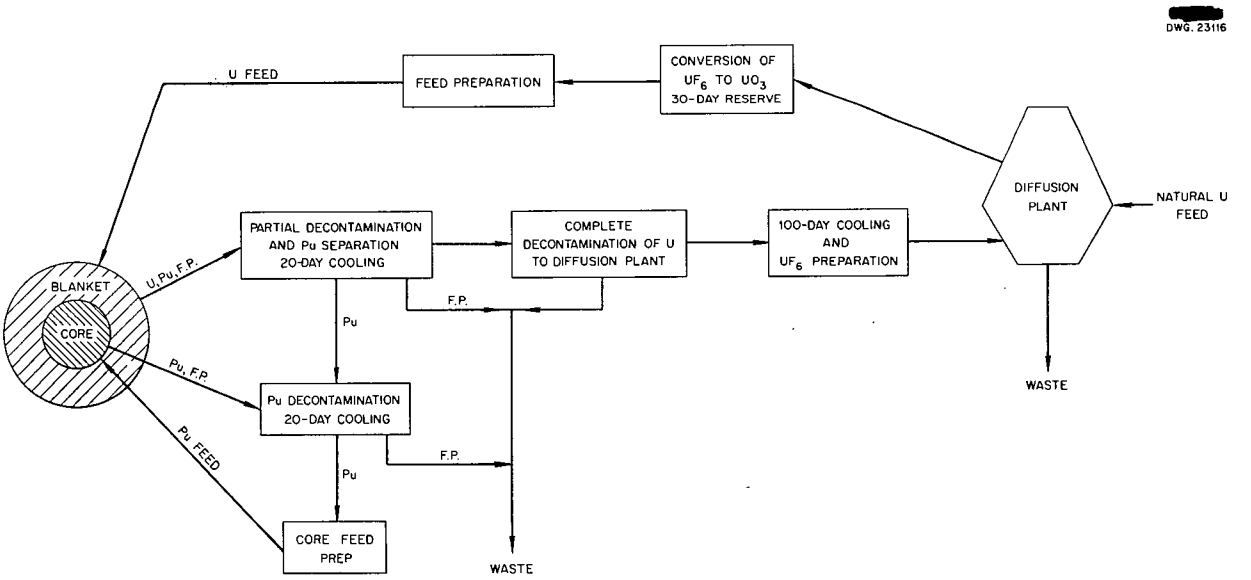

Fig. 44. Fuel Cycle for Two-Region, U-Pu Reactor.

plutonium from the core or blanket was assumed to be $1.00 per gram of fissionable plutonium. The calculations were based upon maintaining a fission-product poison level of 0.07% in the core and operating the core at a specific power of 100 kw/liter. Fuel costs were related to the ratio of U^{235}/U^{238} in the blankets of 15-ft-dia reactors with 6-ft-dia cores operated at a core power of 320 Mw and at a temperature of 250°C for several concentrations of uranium. Some comparative costs were obtained for 300°C operation for a 6-ft-dia reactor with a 3-ft-thick blanket and for a 15-ft-dia reactor with an 8-ft-dia core.

Total Fuel Costs. The effect on fuel costs (neglecting the fixed chemical processing charges) of core diameter, blanket thickness, concentration of U^{238} and ratios of U^{235} to U^{238} in the blanket, and operating temperature are shown in Fig. 45 for two-region reactors operated with specific powers of 100 kw/liter in the core. Numerical data for some of the conditions are presented in Table 25.

Cost of feed to the blanket and inventory and loss charges on D_2O are the major components of fuel cost. With a 6-ft-dia core in a 15-ft reactor, minimum fuel costs are obtained with approximately

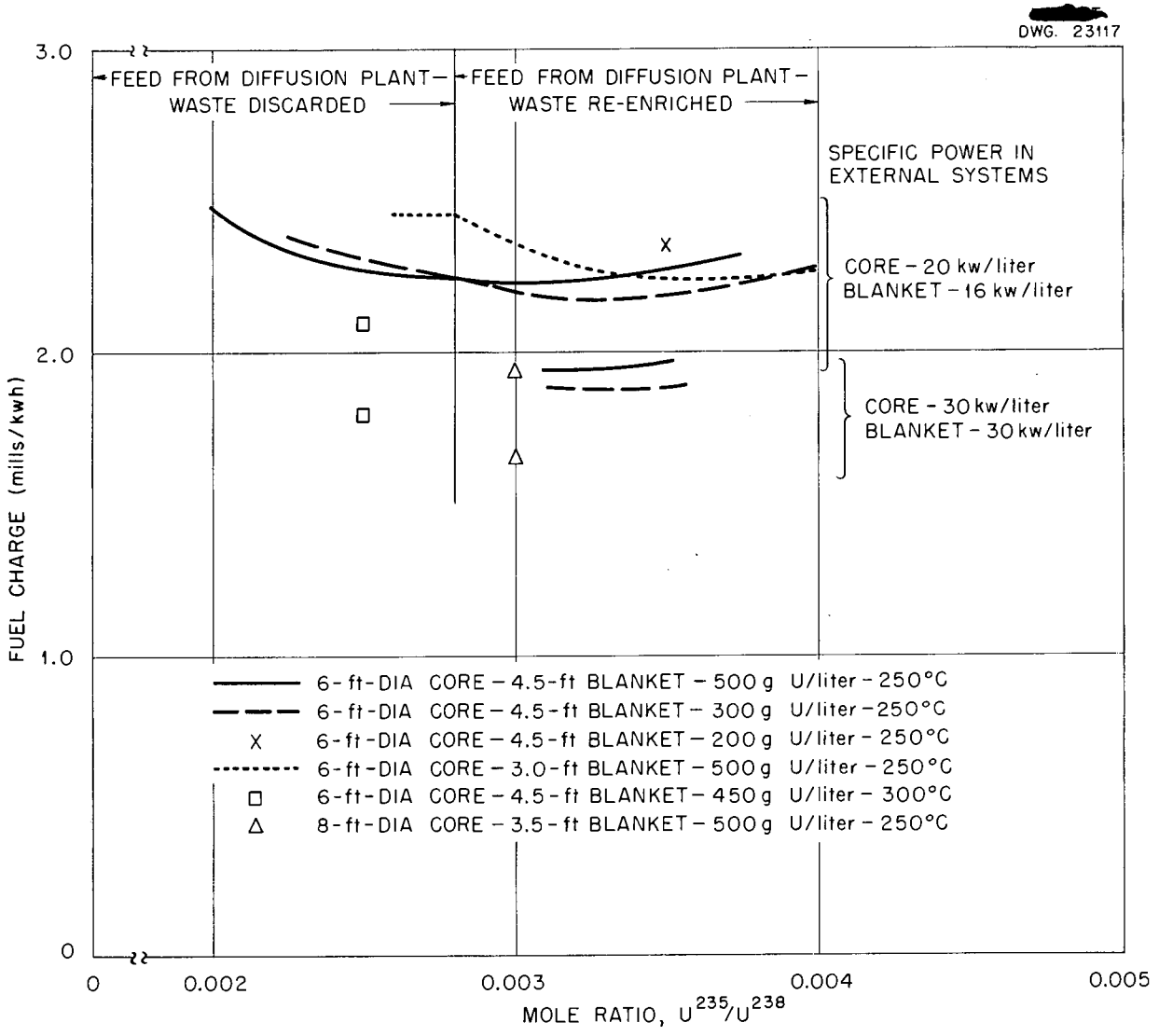

Fig. 45. Fuel Costs for Two-Region, U-Pu Reactors.

TABLE 25. DATA FOR TWO-REGION, URANIUM-PLUTONIUM REACTORS

	CORE DIAMETER													
	6 ft													8 ft
Core power, Mw	320	320	320	320	320	320	320	320	320	320	320	320	320	760
Core Pu concentration, g/liter	1.456	1.364	1.212	1.090	1.183	1.656	1.478	1.403	1.670	1.530	1.382	1.286	1.099	0.771
N_{40}/N_{49} in the core	0.988	0.988	0.988	0.988	1.990	0.988	0.988	0.988	0.988	0.988	0.988	0.988	0.988	0.988
N_{41}/N_{49} in the core	0.351	0.351	0.351	0.351	0.382	0.351	0.351	0.351	0.351	0.351	0.351	0.351	0.351	0.351
Blanket thickness, ft	4.5	4.5	4.5	4.5	4.5	3	3	3	4.5	4.5	4.5	4.5	4.5	3.5
Blanket power, Mw	296	480	837	1060	301	247	411	519	214	425	646	853	314	1140
Blanket U concentration, g/liter	300	300	300	300	450	500	500	500	500	500	500	500	200	500
N_{25}/N_{28} in the blanket	0.00225	0.00275	0.00350	0.00400	0.00250	0.00265	0.00350	0.0040	0.0020	0.00250	0.003125	0.00375	0.0035	0.0030
N_{49}/N_{28} in the blanket	0.00120	0.00174	0.00252	0.00300	0.00130	0.00100	0.00180	0.0022	0.00115	0.00200	0.00270	0.00350	0.0015	0.0020
N_{40}/N_{28} in the blanket	0.00022	0.00047	0.00100	0.00138	0.00023	0.00013	0.00041	0.00060	0.00017	0.00064	0.00093	0.00154	0.00036	0.00052
N_{41}/N_{28} in the blanket	0.00003	0.00009	0.00023	0.00035	0.00003	0.00002	0.00007	0.00011	0.00002	0.00013	0.00020	0.00038	0.00006	0.00009
Feed enrichment (N_{25}/N_U)	0.00285	0.00393	0.00619	0.00807	0.00312	0.00312	0.00473	0.00575	0.00240	0.00360	0.00513	0.00710	0.00483	0.00437
Fraction of fissions in U^{235}	0.24	0.27	0.29	0.301	0.24	0.25	0.28	0.30	0.19	0.22	0.24	0.25	0.33	0.26
Fraction of U consumed	0.018	0.016	0.015	0.015	0.018	0.017	0.016	0.015	0.022	0.020	0.018	0.017	0.013	0.016
Total power, Mw	616	800	1157	1380	621	567	731	839	534	745	966	1173	634	1900
Temperature, °C	250	250	250	250	300	250	250	250	250	250	250	250	250	250
Cost, $/Mwd of total heat														
Core processing	0.64	0.49	0.34	0.28	0.59	0.69	0.54	0.47	0.74	0.53	0.41	0.34	0.49	0.49
Blanket processing	2.34	1.42	0.81	0.63	2.19	2.90	1.51	1.18	2.78	1.41	0.93	0.69	1.54	1.30
D_2O recovery	0.65	0.34	0.16	0.12	0.40	0.51	0.22	0.16	0.47	0.19	0.11	0.05	0.60	0.18
U and Pu losses	0.03	0.02	0.02	0.01	0.03	0.03	0.02	0.02	0.03	0.02	0.02	0.02	0.02	0.02
Pu inventory	0.69	0.71	0.78	0.86	0.94	0.74	0.86	0.88	1.01	1.231	1.38	1.65	0.51	0.78
U inventory	0.00	0.03	0.08	0.12	0.02	0.03	0.12	0.18	0.00	0.02	0.09	0.17	0.08	0.05
D_2O inventory and losses	7.54	6.74	5.90	5.60	7.52	5.86	5.45	5.27	8.55	7.27	6.53	6.08	7.02	5.01
Feed cost – credit for U returned	1.45	2.99	4.10	5.25	2.17	3.09	3.88	4.61	0.32	2.08	3.10	3.98	3.01	3.05
Net cost, $/Mwd of total heat	13.3	12.7	12.2	12.9	13.8	13.9	12.6	12.8	13.9	12.8	12.6	13.0	13.3	10.9
mills/kwhr of electricity	2.37	2.27	2.17	2.29	2.11	2.47	2.24	2.27	2.47	2.27	2.24	2.31	2.36	1.94

300 g of uranium containing 0.0032% U^{235}. The feed costs decrease with increasing uranium concentration and decreasing U^{235} concentration; however, the fraction of the power produced in the blanket and the average specific power decrease more rapidly, resulting in higher inventory and total power costs. Although decreasing the blanket thickness from 4.5 to 3 ft around a 6-ft-dia core results in a slight increase in fuel cost, increasing the core size from 6 to 8 ft in a 15-ft-dia reactor results in a lowering of fuel cost. The feed cost is higher for the larger core, but the average specific power in the reactor, assuming that the specific power in the core is limited to 100 kw/liter, is increased enough so that significant reductions in inventory charges result. Changes in total fuel costs with increasing specific power in the external system and higher operating temperatures are similar to those found with the one-region and two-region reactors discussed in preceding sections.

Cost data contained in Table 25 and Fig. 45 were calculated by assuming that feed, usually containing less than 0.71% U^{235}, would be obtained from a diffusion plant and that wastes containing more than 0.28% U^{235} would be returned to the diffusion plant for re-enriching. The value of uranium, as uranyl nitrate, containing less than 0.28% U^{235} is less than the cost of conversion to UF_6. Similar calculations which were made, assuming that natural uranium is fed to the blanket and that the wastes are discarded, resulted in an increase of 0.0 to 0.2 mill/kwhr in power cost.

Total Power Costs

The total reactor power is governed by the permissible specific power in the core, the core diameter, and the blanket thickness and characteristics. An optimum reactor size and an optimum number of reactors, both of which will depend upon the total station power, can be chosen for each central station application. Too few reactors have been studied to make such a selection possible here; so the data in Table 25 have been used to approximate the relationship between station power and cost, assuming one or more 15-ft-dia reactors with the core size and blanket conditions varied to obtain the desired power level. The estimates of the reactor operating conditions and total power costs are included in Table 26. The minimum cost found was 6.5 mills/kwhr for a station containing two reactors operated at 300°C to produce a total of 740 Mw of electricity. This cost is not significantly different from the 6.7 mills/kwhr found for the one-region, U-Pu reactor station having the same output. As the station power is reduced, the influence of lower fuel inventory costs for two-region reactors becomes more pronounced until the estimated difference in cost becomes 0.5 mill/kwhr for a station having an output of 160 Mw of electricity.

By increasing the heat removal capacity in the external systems to 30 kw/liter, the costs might be lowered to 6.2 mills/kwhr.

TABLE 26. TOTAL POWER COST FOR TWO-REGION, URANIUM-PLUTONIUM REACTOR STATIONS

	REACTOR OPERATING TEMPERATURE					
	250°C			300°C		
Station power, Mw of heat	675	1350	2700	675	1350	2700
Mw of electricity	158	316	632	185	370	740
Number of reactors	1	1	2	1	1	2
Core diameter, ft	6	7.2*	7.2*	6	7.2*	7.2*
Average specific power,** kw/liter	7.4	10	10	7.4	10	10
Total D_2O inventory, metric tons	100	130	260	100	130	260
Uranium concentration in blanket, g/liter	500	500	500	450	450	450
Total uranium inventory, metric tons	63	90	180	63	90	180
Fraction of U^{235}	0.0023	0.0030	0.0030	0.0025	0.0033	0.0033
Total plutonium inventory, kg	160	220	440	190	250	500
Fraction of $Pu^{239} + Pu^{241}$	~0.7	~0.7	~0.7	~0.7	~0.7	~0.7
Fixed charge on investment, mills/kwhr	4.4	4.0	3.9	4.2	3.9	3.8
Operating and maintenance, mills/kwhr	0.9	0.8	0.8	0.8	0.7	0.7
Fuel cost, mills/kwhr						
With fixed chemical processing charge	3.6	2.8	2.8	3.2	2.6	2.6
Without fixed chemical processing charge	2.3	2.1	2.1	2.1	2.0	2.0
Total cost, mills/kwhr						
With fixed chemical processing charge	8.9	7.6	7.5	8.2	7.2	7.1
Without fixed chemical processing charge	7.6	6.9	6.8	7.1	6.6	6.5

*Characteristics of reactors with 7.2-ft-dia core estimated from data for 6-ft and 8-ft cores.

**Specific power is assumed to be 20 kw/liter in core circulating system and 14 kw/liter in blanket circulating system.

NOMENCLATURE

A = kilograms of material fissioned per Mwd = 1.1×10^{-3}
B = cost of CaF_2 cycle, \$/kg
C = total cost for a processing scheme, \$/kg
C_F = cost of natural uranium, \$/kg
C_P = power plant cost, \$/kw of capability
C_R = reactor cost, \$
C_S = cost of separative work, \$/kg
C_T = cost of enriched uranium, \$/kg of U^{235}
C_1 = cost of thorium consumed in reactor, \$/day
C_2 = cost of core processing by CaF_2, \$/day
C_3 = cost of core processing by Thorex, \$/day
C_4 = cost of blanket processing by Thorex, \$/day
C_5 = cost of D_2O recovery, \$/day
D = unit cost of Thorex processing, \$/kg
E_G = gross efficiency of power plant
E_N = net efficiency of power plant
e = plant factor = 0.8
f = fraction of core power generated by fissioning U^{233}
$\mathfrak{F}$ = fixed charges, mills/kwhr
F = flow of feed stream into gaseous diffusion plant, kg/kg of U^{235}

G_0 = breeding gain with no poison in core, $\dfrac{U^{233} \text{ produced}}{U^{233} \text{ consumed in core}} - 1$

G_{H_2} = molecules of hydrogen produced per 100 ev absorbed by the solution, molecules/100 ev
G_{N_2} = molecules of nitrogen produced per 100 ev absorbed by the solution, molecules/100 ev
G_{D_2O} = molecules of D_2O disintegrated per 100 ev absorbed in the system, molecules/100 ev

G = breeding gain with poison in core, $\dfrac{U^{233} \text{ produced}}{U^{233} \text{ consumed in core}} - 1$

I_1 = U^{233} inventory charge, \$/day
I_2 = thorium inventory charge, \$/day
I_3 = D_2O inventory charge, \$/day
K = constant cost term in expression for total processing cost, \$/day
L_1 = value of U^{233} lost in processing, \$/day
L_2 = value of thorium lost in processing, \$/day
M_1 = total fissionable material in core and circulating system, kg
M_2 = $U^{233} + Pa^{233}$ in blanket and circulating system, kg
M_3 = thorium in blanket and circulating system, kg
N = concentration of U^{235} in uranium, mole fraction
N_F = concentration of U^{235} in feed stream for gaseous diffusion plant, mole fraction
N_P = concentration of U^{235} in product stream in gaseous diffusion plant, mole fraction
N_W = concentration of U^{235} waste stream from gaseous diffusion plant, mole fraction
n_1 = number of reactors sharing a CaF_2 plant, dimensionless
n_2 = number of reactors sharing a Thorex plant, dimensionless
P = flow of product stream in gaseous diffusion plant, kg/kg of U^{235}
P_B = blanket power, Mw of heat

P_C = core power, Mw of heat
p = poison in core, neutrons consumed in poison per atom of U^{233} consumed in core
P_R = reactor power, Mw of heat
P_S = specific power, kw/liter
R = $U^{233} + Pa^{233}$ concentration in blanket, g/kg of thorium
$\mathcal{R}$ = fractional charge on investment, $year^{-1}$
r = thorium concentration in blanket, kg/liter
S = separative work, kg/kg of U^{235}
S_1 = volume of core system, liters
S_2 = volume of blanket system, liters
T_1 = CaF_2 processing cycle for core system, days
T_2 = Thorex processing cycle for core system, days
T_3 = Thorex processing cycle for blanket, days
t = cooling time before processing core solution by Thorex, days
t^* = cooling time before processing blanket by Thorex, days
V = value of excess U^{233} produced, \$/day
v = value of U^{233}, \$/kg
v_1 = value of thorium, \$/kg
v_2 = value of D_2O, \$/kg
W = flow of waste stream from gaseous diffusion plant, kg/kg of U^{235}
W_{Th} = chemical processing rate of thorium, kg/day
W_U = chemical processing rate of irradiated uranium feed which is partially decontaminated, kg/day
w_U = chemical processing rate of U^{233} which is decontaminated in calcium fluoride plant or separately from thorium in Thorex plant, g/day
W'_U = chemical processing rate of irradiated uranium feed which is completely decontaminated kg/day
α = ratio of capture to fission in $U^{233} = 0.1$
β = molecules of D_2O per atom of uranium
γ = fraction of reactor fuel returned to diffusion plant per second
ϕ = neutron flux, neutrons/$cm^2 \cdot sec$
ρ = density of $D_2O = 1.1$ kg/liter
$\sigma_a(x)$ = thermal-neutron absorption cross section per unit – e.g., atom, molecule, etc. – of substance x, barns (1 barn = 10^{-24} cm^2)
μ = linear dimensions, microns (1 micron = 10^{-3} cm)

θ = effective period for chemical processing cycle, $\dfrac{P - \left(0.5 + \dfrac{0.73}{f}\right)10^{-2}}{0.122\,\dfrac{AP_C}{M_1 f}}$

BIBLIOGRAPHY

(1) Lane, J. A., *et al.*, *A Preliminary Study of the Feasibility of Large Scale Homogeneous Reactors*, ORNL-855 (Oct. 16, 1950).

(2) Lane, J. A., *et al.*, *A Comparative Survey of the Feasibility and Economics of Aqueous Homogeneous Reactors for the Large Scale Production of Plutonium and U-233*, ORNL-1096 (Dec. 10, 1951).

(3) Huizenga, J. R., *et al.*, *A Study of the Feasibility and Economics of the Aqueous Homogeneous Reactor*, ANL-4891 (Dec. 18, 1952).

(4) "Electrical Power Statistics," *Elec. World* **139**, No. 21, 3 (May 25, 1953).

(5) Putnam, P. C., *Energy in the Future*, Van Nostrand, New York, 1953.

(6) Thompson, P. W., *Summary of Talks Given at Symposium – Roots to Nuclear Power*, P.D.-24, MIT, June 24, 1953.

(7) Starr, C., *Summary of Talks Given at Symposium – Roots to Nuclear Power*, P.D.-24, MIT, June 24, 1953.

(8) Lane, J. A., "Economics of Nuclear Power," lecture presented at Oak Ridge School of Reactor Technology, May 1953 (to be published in *Nucleonics*).

(9) *AEC Division of Raw Materials Exploration Program*, RMO-719 (May 2, 1951).

(10) Parks, R. D., *Source Materials for Nuclear Power*, NP-163 (April 1, 1947).

(11) Ott, H. C., *Meeting of Evaluation Groups, Argonne National Laboratory, June 22 to June 23, 1953*, WASH-148 (Aug. 19, 1953).

(12) Menke, J. R., *Nuclear Fission as Source of Power*, MDDC-1104 (June 30, 1947).

(13) Brown, K. B., *Memorandum Review of Information Pertinent to a Research Program on Uranium Raw Materials*, Y-B30-59 (Jan. 26, 1951).

(14) Atomic Energy Commission, *Raw Materials Program Report No. 3 – Thorium*, AEC 246/1 (Sept. 2, 1949).

(15) Atomic Energy Commission, *Appendices to AEC 246/1*, AEC 246/3 (Sept. 9, 1949).

(16) Lund, R. J., and Holmes, R. E., *Potential Supplies of Thorium from the Rare Earth Industry of the United States*, BMI-257 (Sept. 21, 1951).

(17) Calkins, G. D., and Filbert, R. B., Jr., *Estimated Manufacturing Costs for the Recovery of Thorium and Uranium from Monazite Sands*, BMI-244 (Sept. 15, 1950).

(18) Thayer, V. R., "Status of Heavy Water Processes," *Reactor Sci. Technol.* **3**, No. 1, 9 (March 1953).

(19) Secoy, C. H., *et al.*, Chap. 4.3, Sec. 2.4 in *Reactor Handbook*, ed. by J. F. Hogerton and R. C. Grass, Technical Information Service, AEC, 1953.

(20) Kitzes, A. S., *et al.*, Chap. 4.4, Sec. 2.4 in *Reactor Handbook*, ed. by J. F. Hogerton and R. C. Grass, Technical Information Service, AEC, 1953.

(21) Haubenreich, P. N., *Xenon Poisoning in the ISHR*, ORNL CF-53-5-202 (May 27, 1953).

(22) Graham, C. B., *et al.*, "Engineering Development," *HRP Quar. Prog. Rep. Jan. 1, 1953*, ORNL-1478, p. 45.

(23) Cooper, L., *The Effects of Scale-up on the Hydrodynamics of Reactors*, ORNL CF-52-1-180 (Jan. 25, 1952).

(24) Lesem, L. B., Wilson, R. H., and Spiewak, I., *Hydrodynamics Studies in an Eight-Foot Sphere Utilizing Rotating Flow*, ORNL CF-53-7-29 (July 20, 1953).

(25) Garber, H. J., and Peebles, F. N., *Pressure Drop for the Rotational Flow of Liquids Through a Spherical Container*, Dept. of Chemical Engineering, The University of Tennessee, Knoxville (Oct. 20, 1952).

(26) Goode, L., *Horizontal Single Drum Heat Exchanger Preliminary Design Study*, Memo to HRP File (Jan. 20, 1953).

(27) Ransohoff, J. A., and Spiewak, I., *Development of Hydrogen-Oxygen Recombiners*, ORNL-1583 (Oct. 12, 1953).

(28) Visner, S., *Nuclear Calculations for Homogeneous Reactors Producing U-233*, ORNL CF-51-10-110 (Oct. 22, 1951).

(29) Tobias, M., and Edlund, M. C., *The Influence of the Method of Calculating Resonance Capture on the Fast Leakage in Breeders*, ORNL CF-53-6-158 (June 16, 1953).

(30) Tobias, M., Haubenreich, P. N., and Aven, R. E., *Conversion in a Two-Region Reactor*, ORNL CF-53-2-134 (Feb. 16, 1953).

(31) AEC Neutron Cross Section Advisory Group, *Neutron Cross Sections*, AECU-2040 (May 15, 1952).

(32) AEC Neutron Cross Section Advisory Group, *Neutron Cross Sections*, BNL-170 (May 15, 1952).

(33) AEC Neutron Cross Section Advisory Group, *Supplement 1 to Neutron Cross Sections*, BNL-170A (Nov. 1, 1952).

(34) AEC Neutron Cross Section Advisory Group, *Supplement 2 to Neutron Cross Sections*, BNL-170B (April 1, 1953).

(35) Harvey, J. A., and Hughes, D. J., *Effect of Recent Cross-Section Measurements on Pile Constants*, BNL-221 (Jan. 26, 1953).

(36) Halperin, J., Ellison, C. V., Stoughton, R. W., and Ferguson, D. E., *Capture Cross-Section of Pa^{233} for Thermal Pile Neutrons*, ORNL-1462 (May 5, 1953).

(37) Hughes, D. J., and Eggler, C., *Resonance Absorption of Thorium*, CP-3093 (July 26, 1945).

(38) Haubenreich, P. N., *Calculations for Thorium- and Uranium-Fueled Reactors*, ORNL CF-53-12-1 (Feb. 8, 1954).

(39) Maloney, J. D., Jr., *Cost Estimates for Seven 200 MW Turbine Plants for Operation with Nuclear Reactors at Various Steam Conditions*, ORNL-1387 (Dec. 23, 1952).

(40) Chandler, J. M., and Darby, D. O., *Terminal Report for the ORNL Pilot Plant Investigation of the Purex Process*, ORNL-1519 (Feb. 8, 1954).

(41) Runion, T. C., and Ellison, C. V., *Application of the Purex Process to ORNL Metal Waste Recovery*, ORNL-743 (Aug. 24, 1950).

(42) Gresky, A. T., *et al.*, *Laboratory Development of the Thorex Process: Progress Report October 1, 1952 to January 31, 1953*, ORNL-1518.

(43) *HRP Quar. Prog. Rep. July 31, 1953*, ORNL-1605.

(44) Vitro Corporation of America, *Homogeneous Reactor Processing – Progress Report for May 1953*, KLX-1615.

(45) McDuffie, H. F., *Status of Thorium Blanket Development*, ORNL CF-53-8-95 (Aug. 14, 1953).

(46) Vitro Corporation of America, *Project Summary, D_2O Recovery (57-B)*, KLX-1611 (April 1, 1953).

(47) Vitro Corporation of America, *Conversion of UF_6 to Homogeneous Reactor Fuel (57-D); Project Summary* [for] *April 1, 1952–January 31, 1953*, KLX-1612.

(48) Ferguson, D. E., and Sanders, J. P., *Economics of Chemical Processing for a Uranium-233 Breeder*, ORNL CF-53-6-173 (June 18, 1953).

(49) Sanders, J. P., *Processing Cost of Uranium and Plutonium*, ORNL CF-52-12-162 (Dec. 2, 1952).

(50) California Research and Development Company, *Initial Report on Power Plant Economics*, MTA-34 (May 15, 1953).

(51) Knowlton, A. E., "8th Steam Station Cost Survey," *Elec. World* **140**, No. 2, 121 (July 13, 1953).

(52) Memo from G. H. Clewett to A. M. Weinberg, *Estimated Cost of Producing N^{15}* (Feb. 21, 1950).

(53) Crowley, P. R., and Kitzes, A. S., *Feasibility of a Fluidized Thorium Oxide Blanket*, ORNL CF-53-9-94 (Sept. 2, 1953).

(54) King, L. D. P., (Compilator), *Los Alamos Power Reactor Experiment and Its Associated Hazards*, LAMS-1611 (Dec. 2, 1953).

(55) McDuffie, H. F., *et al.*, *The Radiation Chemistry of Homogeneous Reactor Systems. III. Homogeneous Catalysis of the Hydrogen-Oxygen Reaction*, ORNL CF-54-1-122 (Jan. 26, 1954).

(56) Haubenreich, P. N., and Tobias, M., *Use of Copper as an Internal Recombination Catalyst in the ISHR*, ORNL CF-53-4-292 (April 30, 1953).