[redacted]

[redacted], UNDOCUMENTED

ORNL
MASTER COPY

ORNL-1687
Waste Disposal

Cy. 12

Classification Cancelled
[redacted]
By Authority Of
By PAR
Date SEP 13 1971

LABORATORY RECORDS
1956

Inv 55

Inv 68

CLASSIFICATION CANCELLED
DATE JUL 13 1979 DOE Review Order
DECLASSIFICATION OFFICER
OAK RIDGE NATIONAL LABORATORY
AUTHORITY DELEGATED BY ERDA 5-15-77

IDAHO CHEMICAL PROCESSING PLANT

LIQUID WASTE FACILITIES: DESIGN REPORT

F. N. Browder

[redacted] UNDOCUMENTED

CLASSIFICATION CHANGED TO:
BY AUTHORITY OF: TID-1096
BY: JMH 1-30-59

SPECIAL REREVIEW FINAL DETERMINATION
CLASS. ____ AUTH. ____

REVIEWERS/VERIFIERS	CLASS.	DATE
(1) [signature]	U	5/23/80
(2) C.R. Kelleston OCET/DOE	U	5/16/80

OAK RIDGE NATIONAL LABORATORY
OPERATED BY
CARBIDE AND CARBON CHEMICALS COMPANY
A DIVISION OF UNION CARBIDE AND CARBON CORPORATION
UCC
POST OFFICE BOX P
OAK RIDGE, TENNESSEE

[redacted]

[redacted]

MARTIN MARIETTA ENERGY SYSTEMS LIBRARIES
3 4456 0349612 5

CENTRAL RESEARCH LIBRARY
DOCUMENT COLLECTION

DECLASSIFIED

ORNL-1687
Waste Disposal

Classification Cancelled
Or Changed To
By Authority Of UCC 9/13/71
By E. Gellery Date 11/10/71

DECLASSIFIED

LABORATORY RECORDS
1954

IDAHO CHEMICAL PROCESSING PLANT

LIQUID WASTE FACILITIES: DESIGN REPORT

CONFIDENTIAL, UNDOCUMENTED

F. N. Browder

CENTRAL RESEARCH LIBRARY
DOCUMENT COLLECTION
LIBRARY LOAN COPY
DO NOT TRANSFER TO ANOTHER PERSON
If you wish someone else to see this document, send in name with document and the library will arrange a loan.

OAK RIDGE NATIONAL LABORATORY
OPERATED BY
CARBIDE AND CARBON CHEMICALS COMPANY
A DIVISION OF UNION CARBIDE AND CARBON CORPORATION
UCC
POST OFFICE BOX P
OAK RIDGE, TENNESSEE

RESTRICTED DATA
This document contains Restricted Data as defined in the Atomic Energy Act of 1946. Its transmittal or the disclosure of its contents in any manner to an unauthorized person is prohibited.
DECLASSIFIED

[redacted]

57

ORNL-1687

This document consists of 272 pages.

[redacted]

Contract No. W-7405, eng 26

CHEMICAL TECHNOLOGY DIVISION

IDAHO CHEMICAL PROCESSING PLANT

LIQUID WASTE FACILITIES: DESIGN REPORT

F. N. Browder

DATE ISSUED

AUG 6 1954

OAK RIDGE NATIONAL LABORATORY
Operated by
CARBIDE AND CARBON CHEMICALS COMPANY
A Division of Union Carbide and Carbon Corporation
Post Office Box P
Oak Ridge, Tennessee

[redacted]

[redacted]

[redacted]

ORNL-1687
Waste Disposal

INTERNAL DISTRIBUTION

1. C. E. Center
2. Biology Library
3. Health Physics Library
4-5. Central Research Library
6. Reactor Experimental Engineering Library
7-11. Laboratory Records Department
12. Laboratory Records, ORNL R.C.
13. C. E. Larson
14. L. B. Emlet (K-25)
15. J. P. Murray (Y-12)
16. A. M. Weinberg
17. E. H. Taylor
18. E. D. Shipley
19-20. F. L. Culler
21. F. C. VonderLage
22. W. H. Jordan
23. J. A. Swartout
24. C. P. Keim
25. J. H. Frye, Jr.
26. S. C. Lind
27. A. H. Snell
28. A. Hollaender
29. M. T. Kelley
30. K. Z. Morgan
31. T. A. Lincoln
32. R. S. Livingston
33. A. S. Householder
34. C. S. Harrill
35. C. E. Winters
36. D. W. Cardwell
37. E. M. King
38. W. K. Eister
39. F. R. Bruce
40. D. E. Ferguson
41. H. K. Jackson
42. H. E. Goeller
43. D. D. Cowen
44. R. A. Charpie
45. J. A. Lane
46. R. E. Blanco
47. M. J. Skinner
48. E. L. Nicholson
49. W. G. Stockdale
50. F. N. Browder
51. W. E. Unger

EXTERNAL DISTRIBUTION

52. AF Plant Representative, Wood-Ridge
53. American Machine and Foundry Company
54. ANP Project Office, Fort Worth
55-58. Argonne National Laboratory
59-60. Army Chemical Center
61-62. Atomic Energy Commission, Washington
63. Babcock and Wilcox Company
64-65. Brookhaven National Laboratory
66. Bureau of Medicine and Surgery
67-68. Carbide and Carbon Chemicals Company (C-31 Plant)
69-70. Carbide and Carbon Chemicals Company (K-25 Plant)
71-72. Carbide and Carbon Chemicals Company (Y-12 Plant)
73. Chicago Patent Group
74. Chief of Naval Research
75. Commonwealth Edison Company
76. Dow Chemical Company, Rocky Flats
77-80. duPont Company, Augusta
81. duPont Company, Wilmington
82. Duquesne Light Company
83. Foster Wheeler Corporation
84-86. General Electric Company, ANPD
87. General Electric Company, APS

[redacted]

88-91. General Electric Company, Richland
92-93. Goodyear Atomic Corporation
94. Hanford Operations Office
95. Iowa State College
96-97. Knolls Atomic Power Laboratory
98-101. Los Alamos Scientific Laboratory
102. Mallinckrodt Chemical Works
103. Monsanto Chemical Company
104. Mound Laboratory
105. National Bureau of Standards
106. National Lead Company of Ohio
107. Naval Medical Research Institute
108. Naval Research Laboratory
109. Newport News Shipbuilding and Dry Dock Company
110. New York Operations Office
111-112. North American Aviation, Inc.
113. Patent Branch, Washington
114-117. Phillips Petroleum Company (NRTS)
118. Public Health Service
119. San Francisco Field Office
120. U. S. Naval Radiological Defense Laboratory
121. UCLA Medical Research Laboratory
122-124. University of California Radiation Laboratory, Berkeley
125-126. University of California Radiation Laboratory, Livermore
127-128. University of Rochester
129. University of Washington
130. Vitro Corporation of America
131-132. Westinghouse Electric Corporation
133-147. Technical Information Service, Oak Ridge
148. Division of Research and Medicine, AEC, ORO
149. Pacific Northwest Power Group
150. Detroit Edison Company

MARTIN MARIETTA ENERGY SYSTEMS LIBRARIES

3 4456 0349612 5

[redacted]

TABLE OF CONTENTS

		Page
0.0	Abstract	1
1.0	Introduction	2
1.1	Participants in the Idaho Chemical Processing Plant Project	2
1.2	Design Philosophy	2
1.3	Types of Liquid Waste	3
1.4	Method of Presentation	4
2.0	Summary	4
2.1	General Arrangement of the Waste Facilities	4
2.2	Waste Collection Facilities in the Process Building	6
2.3	Waste Collection Facilities in the Waste Disposal Building	8
2.4	Waste Treatment Facilities	10
2.5	Waste Storage Facilities	13
2.6	Disposal Facilities for Service Waste	16
3.0	First Cycle Aqueous Raffinate Concentrate	17
3.1	Production Rate	17
3.2	Composition and Radioactivity	19
3.3	Collection and Storage	21
3.4	Details of Waste Handling Equipment	21
3.4.1	Collection Tanks WM 100, WM 101, and WM 102	21
a.	Transfer Jets and Lines	26
b.	Instruments	26
c.	Spargers	27
d.	Off-Gas Connection	27
e.	Addition Funnels WM 800, WM 801, and WM 802	27
f.	Samplers WM 600, WM 601, and WM 602	27
g.	Cooling Coils	27
h.	Cooling Water Supply to Collection Tank Coils	28
i.	Reflux Condenser WM 302	30
j.	Reference Drawings for Collection Tanks	32

Page

3.4.2 Permanent Storage Tank WM 180 32

a. Nozzles 34
b. Proposed Cooling System for Storage Tank 41
c. Relief Valves 45
d. Instrumentation 46
e. Instrument House CPP 712 46
f. Reflux Condensers WM 300 and WM 301 46
g. Reference Drawings 49

4.0 Second and Third Cycle Aqueous Raffinate Concentrate 49

4.1 Production Rate 49
4.2 Composition and Radioactivity 50
4.3 Collection and Storage 51
4.4 Details of Waste Handling Equipment 52

4.4.1 Collection Tank WL 101 52

a. Submerged Transfer Jets 56
b. Instruments 56
c. Off-Gas Connection 56
d. Addition Funnel WL 801 56
e. Sampler WL 601 56
f. Sparger 56
g. Reference Drawings 57

4.4.2 Permanent Storage Tank WM 181 57

5.0 Process Equipment Waste 59

5.1 Composition and Radioactivity 59
5.2 Sources 59

5.2.1 P.E.W. Sources in the Laboratory Building CPP 602 59
5.2.2 P.E.W. Sources in the Process Building CPP 601 61

a. Cell Wall Drains 61
b. Vacuum Trap Tanks 62
c. Future Filter Aid Drains 62

Page

d. Cell Floor Drain System 62
e. References 62

5.2.3 Sources of P.E.W. in the Waste Disposal Building CPP 604 64
5.2.4 Sources of P.E.W. in the Waste Tank Farm and Stack Area 64

a. Storage Tank WM 180 Future Cooling System 64
b. Stack 65
c. Reflux Condenser WM 302 65
d. References 65

5.3 Production Rate 65
5.4 Process Description 66
5.5 Details of Waste Handling Equipment 70

5.5.1 P.E.W. Header in the Laboratory and Process Buildings 70
5.5.2 Collection Tanks WG 101 and WH 100 73

a. Arrangement of Collection Tanks 75
b. Transfer Jets 75
c. Instruments 75
d. Off-Gas Connections 77
e. Spargers and Agitators 77
f. Samplers WG 601 and WH 600 78
g. Pumps WC 200 and WD 200 78
h. Reference Drawings 79

5.5.3 P.E.W. Evaporator Equipment 80

a. Arrangement 80
b. Evaporator Equipment Instruments 83
c. Reference Drawings 83
d. Evaporator Surge Tank (WL 102) 85

(1) Surge Tank Inlet Lines 85
(2) Instruments 86
(3) Sparger 87
(4) Off-Gas Connection 87
(5) Submerged Transfer Jets 87
(6) Addition Funnel 87
(7) Sampler WL 602 88

		Page
e.	Gravity Feed Tank WL 109	88
	(1) Feed Tank Sparger	89
	(2) Off-Gas Connection	89
	(3) Instruments	89
	(4) Addition Funnel	89
f.	Evaporator Flash Tank--Accumulator WL 113	89
	(1) Flash Tank Inlet and Outlet Lines	93
	(2) Instruments	93
	(3) Sparger	93
	(4) Spray Nozzle	94
	(5) Sampler WL 613	94
g.	Reboiler WL 300	94
	(1) Reboiler Steam Supply	96
	(2) Removal of Steam Condensate and Noncondensables	96
	(3) Absolute Pressure Indicator-Controller APIC-1-WL	97
	(4) Addition Funnel WL 800	97
h.	Collection System for Reboiler Condensate	97
i.	Bubble Cap Tower WL 112	98
	(1) Reflux	101
	(2) Sparger	101
	(3) Addition Funnel WL 812	101
	(4) Spray Nozzles and Spare Nozzles	101
	(5) Instruments	102
j.	Condenser WL 301	102
k.	Condensate Monitor	102
l.	Condensate Receivers WL 106 and WL 107	105
	(1) Inlet, Vacuum, Vent, and Drain Lines	108
	(2) Instruments	108

Page

(3) Samplers WL 606 and WL 607 109

m. Pumps WL 206 and 206A 109
n. Vacuum Roughing Tank WL 100 and Pump WL 207 109
o. Evaporator Vacuum System 109

(1) Vacuum Jet WL 503 109
(2) Exhauster Condenser WL 302 112
(3) Separator Tank WL 108 112

6.0 Cell Floor Drain Waste 117

6.1 Composition and Flow Rates 117
6.2 Sources 117
6.3 Handling and Equipment Description 117

6.3.1 Description of Process 117
6.3.2 Details of Waste Handling Equipment 119

a. C.F.D. Header in CPP 602 and CPP 601 119
b. C.F.D. Collection Tanks WG 100 and WH 101 120

7.0 Service Waste 121

7.1 General Description 121
7.2 Service Waste Reference Drawings 121
7.3 Open Drain System in CPP 601 123
7.4 Closed Drain System in CPP 601 and CPP 602 124
7.5 Service Waste System in CPP 604 and CPP 605 124
7.6 Service Waste System in CPP 606 125
7.7 Service Waste Monitoring Station, CPP 709 125

8.0 Supplementary Facilities 131

8.1 Leak-Detection System 131
8.2 Sampling Facilities 136

8.2.1 Sampler Transfer Stations (Sample Galleries) 136
8.2.2 Sample Carrier 138

Page

8.2.3 Sample Carrier Station 142
8.2.4 Operating Tongs 142
8.2.5 Transporting of Waste Samples 144
8.2.6 Waste-System Samplers 145
8.2.7 Reference Drawings 147

9.0 Bibliography 150

10.0 Appendix 152

10.1 ICPP Area Arrangement 152
10.2 Utilities for Liquid Waste Areas in the ICPP 153

10.2.1 Waste Collection Area in CPP 601 153
10.2.2 Waste Disposal Building, Tank Farm and Blower Building 158

10.3 ICPP Equipment Identification Code 161
10.4 Liquid Waste Equipment Lists 164
10.5 Instruments 168

10.5.1 Pneumatic Instruments for Remote Service 168
10.5.2 Electrical Instruments for Remote Service 175
10.5.3 Instrument List 176
10.5.4 Instrument Components 181

10.6 Specifications and Calculations 196

10.6.1 Activity Calculations for First Cycle Aqeuous Raffinate Concentrate 196
10.6.2 Activity Calculations for Second and Third Cycle Raffinate Concentrate 197
10.6.3 Sparger Calculations 198

a. For P.E.W. and C.F.D. (Horizontal) Collection Tanks WG 100, WG 101, WH 100, and WH 101 198
b. For (Horizontal) Raffinate Collection Tanks WM 100, WM 101, WM 102, and WL 101 and Evaporator Surge Tank WL 102 199

[redacted]

Page

10.6.4 Preliminary Calculations on Cooling Coil Design for Tanks WM 100, WM 101, and WM 102 199
10.6.5 Preliminary Specifications for the Waste Evaporator, Idaho Chemical Processing Plant 203
10.6.6 Waste Evaporator Calculations (Heat Transfer), November, 1950 208
10.6.7 Waste Evaporator Calculations (Recirculation Rate) 215

10.7 Operational Data from Evaporator Experimental Runs 239

10.7.1 Cold Runs 239
10.7.2 Operation of ICPP Waste Evaporator with Hot Feed 246

LIST OF TABLES

Table 1 Production of First Cycle Aqueous Raffinate Concentrate 19

Table 2 Radioactivity in the First Cycle Aqueous Raffinate Concentrate 20

Table 3 Composition of the First Cycle Aqueous Raffinate Concentrate 20

Table 4 Design Data for Collection Tanks WM 100, WM 101, and WM 102 23

Table 5 Design Data for Reflux Condenser WM 302 31

Table 6 Design Data for Permanent Storage Tank WM 180 35

Table 7 Design Data for Reflux Condensers WM 300 and WM 301 48

Table 8 Production of Second and Third Cycle Aqueous Raffinate Concentrate 50

		Page
Table 9	Radioactivity of Second and Third Cycle Aqueous Raffinate Concentrate	51
Table 10	Composition of Second and Third Cycle Aqueous Raffinate Concentrate	52
Table 11	Design Data for Collection Tank WL 101	55
Table 12	List of Laboratory Hot Sinks	61
Table 13	Design Estimates of Process Equipment Waste Production Rate	66
Table 14	Production of P.E.W. from Normal Processing of NP and MTR Fuels	67
Table 15	Design Data for P.E.W. and C.F.D. Collection Tanks WG 100, WG 101, WH 100, and WH 101	74
Table 16	Design Data for Agitators WG 400, WG 401, WH 400, and WH 401	77
Table 17	Design Data for C.F.D. and P.E.W. Pumps WB 200, WC 200, WD 200, and WE 200	79
Table 18	Design Data for Evaporator Surge Tank WL 102	86
Table 19	Design Data for Gravity Feed Tank WL 109	88
Table 20	Design Data for Flash Tank--Accumulator WL 113	92
Table 21	Design Data for Reboiler WL 300	95
Table 22	Design Data for Steam Condensate Tank WL 115 and Pumps WL 208 and 208A	98
Table 23	Design Data for Bubble Cap Tower WL 112	99
Table 24	Design Data for Condenser WL 301	103
Table 25	Design Data for P.E.W. Condensate Receivers WL 106 and WL 107	106

[redacted]

		Page
Table 26	Design Data for Condensate Pumps WL 206 and WL 206A	110
Table 27	Design Data for Vacuum Roughing Tank WL 100 and Pump WL 207	110
Table 28	Design Data for After-condenser WL 302	114
Table 29	Design Data for Separator Tank WL 108	116
Table 30	Leak-Detection Sample Boxes in CPP 604	133
Table 31	Leak-Detection Sample Boxes in Waste Collection Area of CPP 601	133
Table 32	Routine Samples to be Taken from the Liquid Waste Systems	137
Table 33	Waste-System Samplers	145
Table 34	Code Numbers and Functions of ICPP Area Buildings	152
Table 35	Utilities Supplied to CPP 601 Collection Area for P.E.W. and C.F.D. Wastes	156
Table 36	Utilities Supplied to CPP 604 and CPP 605 Areas	159
Table 37	List of Waste System Jets	167
Table 38	General Instrument Identification Code	173
Table 39	Summary of Experimental Runs - Liquid Waste Evaporator	241
Table 40	Operating Conditions for Hot Evaporator Runs	248
Table 41	Analyses and Decontamination Factors of Product Condensates	249
Table 42	Liquid Waste Costs	251
Table 43	Summary of Construction and Installation Costs of Liquid Waste System	253
Table 44	Breakdown of Equipment Costs	254

LIST OF FIGURES

		Page
Fig. 1	Isometric View of Chemical Processing Plant	5
Fig. 2	Cross Section of Process Building Looking North from End of Cell Canyons	7
Fig. 3	Cross Section of Process Building CPP 601 Looking North from Waste Tank Area	9
Fig. 4	Section Through Waste Disposal Building Looking East	12
Fig. 5	Exploded View and Plan - Waste Disposal Building CPP 604 and Exhaust Blower Building CPP 605	14
Fig. 6	Waste Tank Farm and Disposal Area	15
Fig. 7	First Cycle Aqueous Raffinate System	18
Fig. 8	First Cycle Aqueous Raffinate Storage	22
Fig. 9	Flow Through Cooling System for Raffinate Collection Tanks	[redacted]
Fig. 10	ICPP: Footings for Tank Farm, Looking West, April 27, 1951	33
Fig. 11	ICPP: Aerial View, Looking South. Tank Farm and Waste Disposal Building, July 1, 1951	36
Fig. 12	ICPP: Waste Disposal Building on Left; Waste Tank Farm on Right. Looking Northwest from Top of Stack. August 29, 1951	37
Fig. 13	ICPP: Waste Tank Farm, Looking Northeast, September 28, 1951	38
Fig. 14	ICPP: Aerial View of ICPP Area Showing Tank Farm, Looking Southwest, October 30, 1951	39
Fig. 15	ICPP: Tank Farm, Looking Southwest, July 30, 1951	40

[redacted]

		Page
Fig. 16	ICPP: View of Tank Farm, Looking Southeast; Tank Farm 90% Complete. March 26, 1952	42
Fig. 17	ICPP: Tank Farm with Service and Laboratory Buildings in Background; Tank Farm 100% Complete. September 29, 1952	43
Fig. 18	Second and Third Cycle Raffinate Storage	53
Fig. 19	Sources of Process Equipment Waste	60
Fig. 20	Typical Cell Wall Drain	63
Fig. 21	Process Equipment Waste Disposal	68
Fig. 22	Process Equipment Waste and Cell Floor Drain Waste Collection	71
Fig. 23	ICPP: Panel Board H, Waste Collection Area WG and WH. October 10, 1952	76
Fig. 24	Flow Diagram Process Equipment Waste Evaporator	81
Fig. 25	ICPP: View of Graphic Panel Board, Waste Disposal Building, December 3, 1952	84
Fig. 26	Flow in Gravity Feed Tank	90
Fig. 27	Flows in Reboiler and Flash Tank--Accumulator	91
Fig. 28	Flow Through Bubble Cap Column	100
Fig. 29	Flow Through Condenser	104
Fig. 30	Flow Through Condensate Receivers	107
Fig. 31	Flow Through Vacuum Jet System	113
Fig. 32	Sources of Cell Floor Drain Waste (C.F.D.)	118
Fig. 33	Service Waste Headers (Sources)	122
Fig. 34	Service Waste Monitor Schematic Diagram	126

[redacted]

		Page
Fig. 35	Continuous Flow Water Monitor Assembly	129
Fig. 36	Leak-Detection Pots and Boxes	134
Fig. 37	Sample Transfer Station	139
Fig. 38	Sampler Transfer Unit	140
Fig. 39	Cross Section of Transfer Station	141
Fig. 40	Sample Carrier	143
Fig. 41	Plot Plan Idaho Chemical Processing Plant	154
Fig. 42	Complete Waste Disposal System	155
Fig. 43	Liquid Waste System Electrical Layout in CPP 601	157
Fig. 44	Liquid Waste System Electrical Layout in CPP 604	162
Fig. 45	Panel Board H-Layout	169
Fig. 46	Panel L, North End	170
Fig. 47	Panel L, South End	171
Fig. 48	ICPP: Graphic Panel for Liquid Waste Evaporator	172

[redacted]

[redacted]

0.0 ABSTRACT

The liquid waste facilities of the Idaho Chemical Processing Plant are described in detail, the basis of the design is outlined, and early performance data from operation of the completed plant are presented. Only the facilities for liquid waste handling, exclusive of sanitary waste, are covered.

[redacted]

[redacted]

1.0 INTRODUCTION

1.1 Participants in the Idaho Chemical Processing Plant Project

The Idaho Chemical Processing Plant (ICPP) was built under the auspices of the Idaho Operations Office (IDO) of the AEC. Foster Wheeler Corporation of New York was the architect-engineer responsible for the design and engineering of the plant; Bechtel Corporation of San Francisco constructed the plant; and American Cyanamid Company of New York was chosen as the operating contractor. The Chemical Technology Division of Oak Ridge National Laboratory developed the process used in the ICPP and was responsible for all process design. This responsibility included establishment of all space requirements and general building criteria influenced by process, shielding, and criticality considerations. Specifically, the ORNL responsibilities were: to specify materials of construction where process, safety, or radiation factors required it; to review and approve all construction drawings; to follow and check construction and equipment installation; to check operability; and to serve as consultants during the startup period with radioactive materials.

1.2 Design Philosophy

The purpose of the ICPP is to provide the AEC with a permanent production facility for the decontamination of irradiated enriched uranium reactor fuels. The plant contains facilities for the recovery of enriched uranium from the Materials Testing Reactor (MTR), of the Experimental Breeder Reactor (EBR), and from the special enriched Hanford slugs (NP fuel). In addition, space is allotted for expansion of recovery facilities for other enriched fuels. The plant employs a solvent extraction process to separate the uranium from the contaminating fission products and transuranic elements. These radioactive products dissolved in concentrated solutions of aluminum nitrate and caustic soda constitute the main radioactive aqueous wastes handled in the plant.

The AEC aqueous waste disposal policy at the time the ICPP was designed required that absolutely no radioactivity be discharged from the plant. This policy still permits no dependence on dilution of radioactive liquid waste by natural streams or on its adsorption by underground strata. Liquid waste leaving the National Reactor Testing Station area, whose southern boundary is about 20 miles from the ICPP, must meet drinking water tolerance specifications for radioactive components.

[redacted]

The aim of the ICPP liquid waste system, therefore, is to minimize the discharge of radioactivity to the natural environment while treating and storing as small a volume of waste as possible. Achievement of this aim requires: (1) collection facilities for segregating the radioactive ("hot") wastes from the nonradioactive ("cold") wastes and for affording adequate uranium accountability, (2) treatment facilities to reduce the volume of the hot wastes, (3) permanent storage facilities for concentrated hot wastes, (4) a means of transporting the wastes from one of these facilities to another, and (5) a means of monitoring the cold wastes for possible radioactivity discharged from the plant. Other considerations include (1) minimizing expensive maintenance by minimizing the use of mechanical equipment in handling wastes and (2) facilitating decontamination by the extensive use of stainless steel in areas where access is necessary.

1.3 Types of Liquid Waste

On the basis of these design considerations, the ICPP wastes have been segregated according to radioactivity level into five types, each type being handled in its own system for reasons of economy and safety. The criticality control features of the ICPP minimize the chance for uranium to enter any of the waste systems, thereby making all the waste types non-uranium bearing streams. The complete liquid waste system is shown diagrammatically in the Appendix (see Fig. 42). The five types of liquid waste are:

First Cycle Aqueous Raffinate Concentrate. As the name implies, this waste is the water solution of fission products and aluminum nitrate separated from uranium in the first extraction cycle, evaporated to 2.2 M $Al(NO_3)_3$ which is almost the saturation point of aluminum nitrate. This is the most highly radioactive of all wastes handled in the ICPP. It is expected to boil continuously as a result of the heat generated by its associated radioactivity.

Second and Third Cycle Aqueous Raffinate Concentrate. This is the water solution of fission products and aluminum nitrate from the second and third extraction cycles, also evaporated almost to the saturation point of the aluminum nitrate. This waste is very radioactive but not as extremely so as the first cycle waste.

Process Equipment Waste (P.E.W.). This waste derives its name from its source, i.e., the process equipment, which consists of the vessels in the Process Building cells and the hot hoods in the Laboratory Building. Its radioactivity level will vary with operating conditions in the plant.

Cell Floor Drain Waste (C.F.D.). This waste is normally nonradioactive because it originates from cold laboratory sinks and from cell floor drains, which have normally closed valves. The waste will become hot when these cell floor drains are used during decontamination periods and whenever hot materials are erroneously dumped down a cold laboratory drain.

Service Waste. This waste is derived from services for the process and includes mainly discharged cooling water, steam condensate, and water from washing floors and vessels in cold areas. Service waste should be nonradioactive at all times but is monitored to make certain of this before disposal.

1.4 Method of Presentation

In this report the facilities for housing the waste handling equipment are described in the Summary. The body of the report concerns itself with equipment details, which are presented in sections describing the types of waste. Calculations and tables of miscellaneous data are given in the Appendix.

2.0 SUMMARY

2.1 General Arrangement of the Waste Facilities

The ICPP is located on the reservation of the National Reactor Testing Station (NRTS) about 50 miles west of Idaho Falls in eastern Idaho. The ICPP area is about 3 miles east of the MTR, about 8 miles north of the EBR, and about 2 miles north of the Central Facilities area. Table 34 in the Appendix lists the ICPP area buildings with their code numbers and functions. An isometric view of the area, showing the arrangement of the buildings, is given in Fig. 1. The S.F. storage building, not shown, is a half mile south of the other buildings.

The facilities for collecting P.E.W. and C.F.D. wastes from the Laboratory and Process Buildings are located in the south end of the Process Building. The facilities for treating these wastes and for collecting the concentrated raffinate wastes are located in the Waste Disposal Building, whose treatment areas are entirely underground for blast protection. The Waste Tank Farm stores permanently the concentrated radioactive wastes that cannot be discharged from the area because of the contamination hazard. The Monitoring Station continuously monitors all aqueous service wastes (exclusive of sanitary waste) for radioactivity discharged from the ICPP area to the Disposal Well. The Disposal Well conducts the ICPP service waste to the underground stream that flows through the lava beds underlying the NRTS reservation. The presence of the 50-ft-deep stratum of gravel

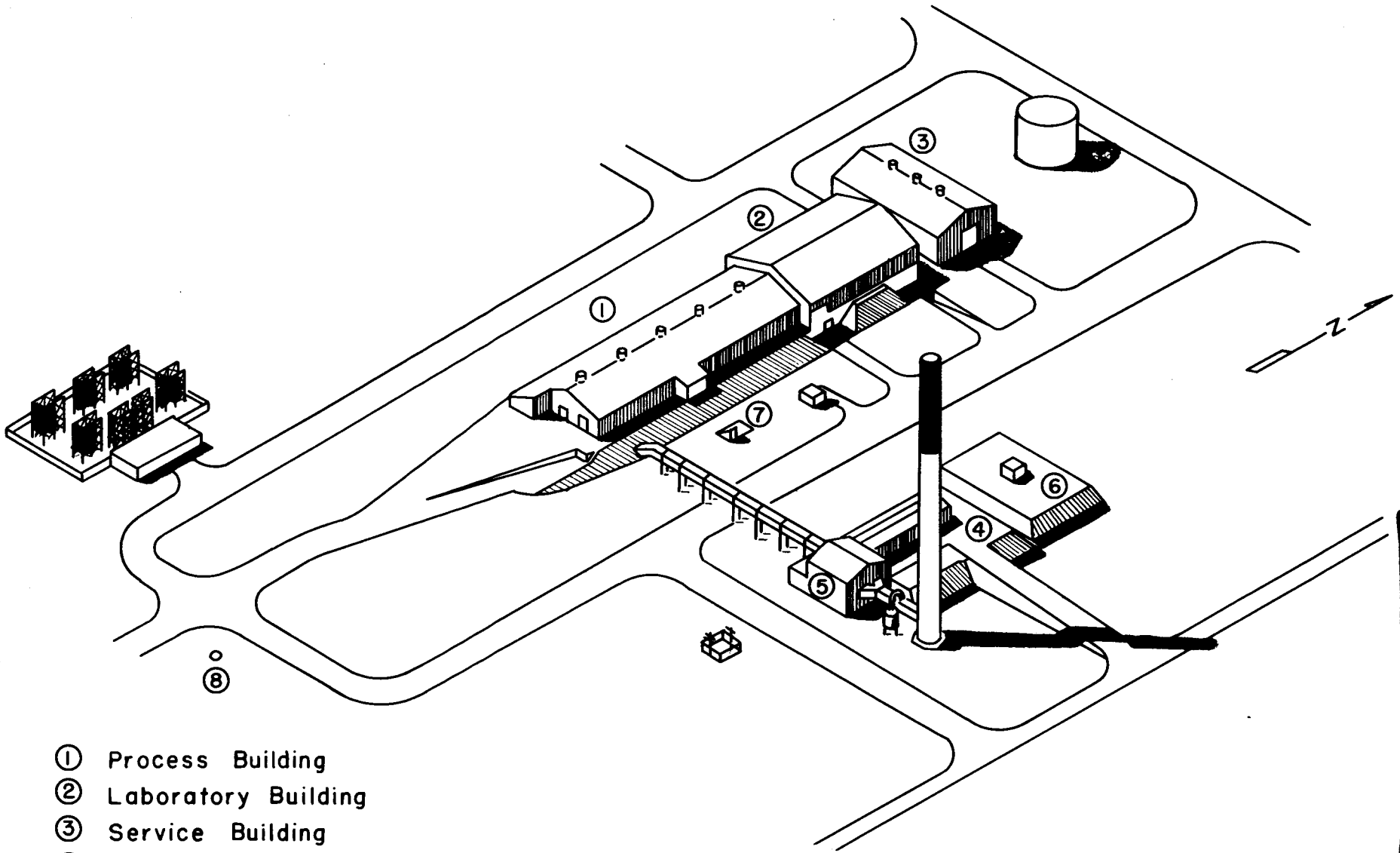

① Process Building
② Laboratory Building
③ Service Building
④ Waste Disposal Building.
⑤ Exhaust Blower Building
⑥ Tank Farm
⑦ Monitoring Station
⑧ Disposal Well

FIG. 1

ISOMETRIC VIEW OF CHEMICAL PROCESSING PLANT

Not to scale

DWG. 20052

lying over about 450 ft of porous lava and this huge-volume stream were prime factors in the selection of the ICPP site from the standpoint of underground waste storage and disposal.

Normal utilities are supplied to the waste collection area in the Process Building, to the Waste Disposal Building, and to the Waste Tank Farm from the Service Building, which houses the steam boilers, air compressors, water treatment equipment, and the main electrical switch gear for the plant. These utilities are described in Tables 35 and 36 in the Appendix. The Service Building also supplies ventilating air to all the areas of the Process Building including the waste collection area. Blowers in the Exhaust Blower Building suck the ventilating air from the Process and the Waste Disposal Buildings and discharge it to the stack. The Exhaust Blower Building also supplies ventilating air to the Waste Disposal Building.

2.2 Waste Collection Facilities in the Process Building

Gravity flow is utilized to collect all types of liquid waste in the ICPP. Service waste flows from vessel jackets and condensers in the cells and from cold floor drains in the makeup and operating areas to two headers in the service corridor of the Process Building. One of these, a 12-in.-IPS carbon steel header, conducts the noncorrosive steam condensate and cooling water from the building to the Monitoring Station. A smaller (6-in.-IPS) stainless steel header suspended near the carbon steel header conducts the chemical wastes from cold floor drains to the same destination. The entire waste collection system is shown diagrammatically in Fig. 22.

The P.E.W. and C.F.D. wastes are collected in two stainless steel headers in a pipe trench, which extends under the centers of both the Laboratory and Process Buildings. Figure 2 shows the location and arrangement of these headers and the headers for service waste. The pipe trench is accessible through hatches in the floors of the access corridor and the Laboratory Building basement. The trench is lined with stainless steel and is provided with water sprays to facilitate its decontamination. It slopes to permit gravity flow in the headers, terminating in a sump to collect water from the sprays and any leakage from the headers. The sump is equipped with a liquid level alarm, a sampler, and transfer jets discharging to hot and cold waste disposal facilities.

The P.E.W. and C.F.D. headers extend through the south wall of the pipe trench into two cells containing two collection tanks each.

DWG. 20053

[redacted]

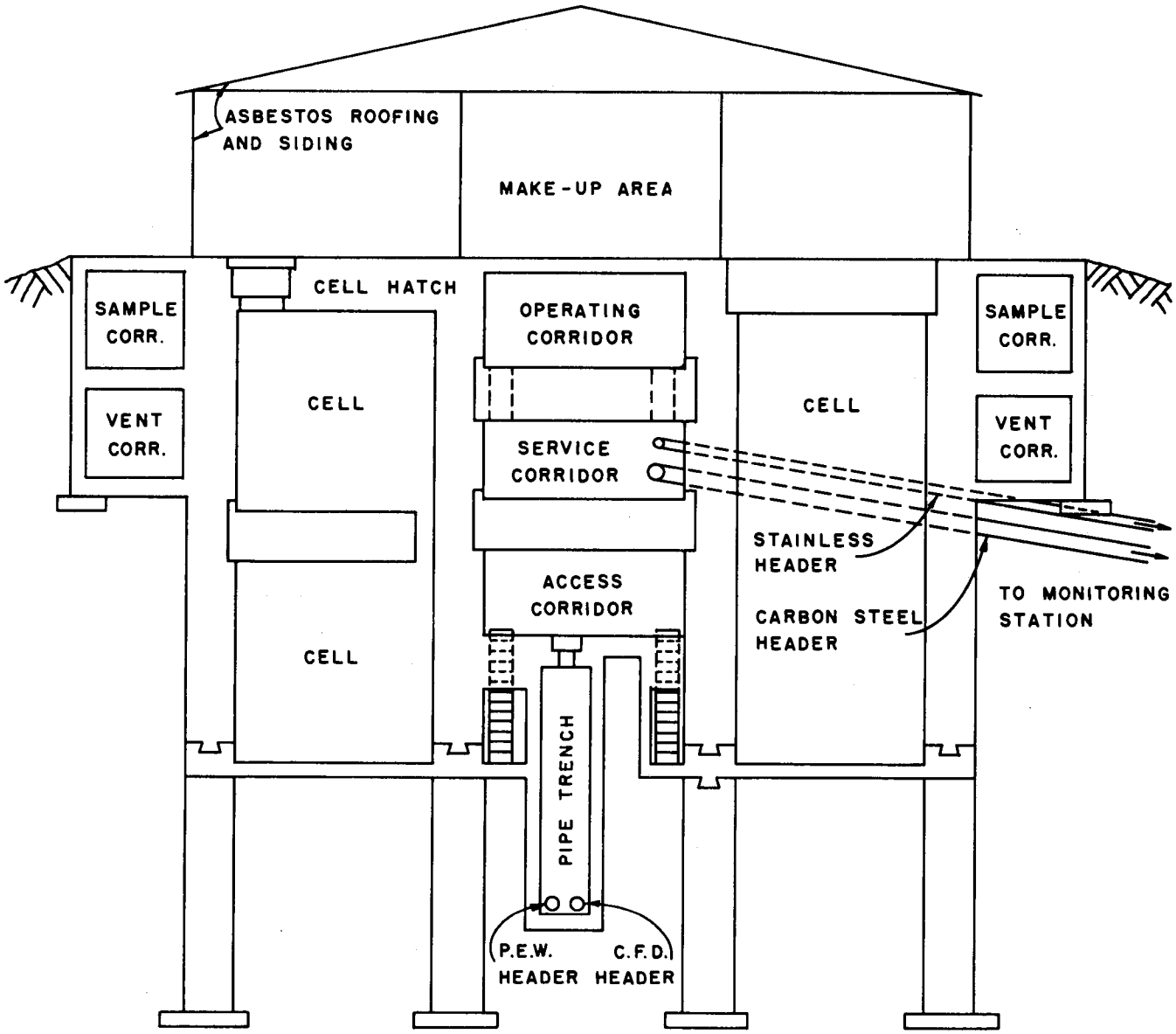

FIG. 2

CROSS SECTION OF PROCESS BUILDING

LOOKING NORTH FROM END OF CELL CANYONS

One tank for C.F.D. and one for P.E.W. are located in each cell to assure operation of one cell while the other is being decontaminated for repair. Diversion boxes at the ends of the headers permit the selection of the particular tank to receive the flow from each header. Figure 3 shows the arrangement of these cells, which are in the deepest part of the building. This depth (their floors are 57.5 ft below the operating corridor floor) is necessary to permit gravity flow from the drains in the process cells to this collection area. The collection tank cells have stainless steel floors and sumps to aid in their decontamination. The cell sumps are equipped with liquid level alarms and transfer jets discharging to the collection tanks.

The collection tanks are 5000-gal stainless steel vessels equipped with spargers and motor-driven agitators, liquid level and density recorders, temperature indicators, and transfer jets for discharging the contents of the tanks in one cell to the tanks in the other. Each tank has a pump to lift the waste from this deep collection area to the disposal facilities. The pumps are housed in individual cells shielded from each other and from surrounding areas but are accessible for maintenance. The entire plant waste system has been so arranged that these pumps are the only mechanical equipment required to transport hot waste. The instruments, samplers, switches, valve handles, diversion box handles, and other manipulating devices for the pumps, sumps, and tanks are located in two control rooms above the tank cells. These control rooms are shielded from the tank cells by 5-ft-thick concrete floors, through which the cells are accessible by means of hatches. The cells receive ventilation air from the control rooms and are kept at a lower pressure than the control rooms to ensure that the air flow is always from the colder to the hotter area. Differential pressure gauges indicate the pressure drop between the tank cells and the control rooms. The air is exhausted to the vent duct leading to the stack.

2.3 Waste Collection Facilities in the Waste Disposal Building

The concentrated raffinate wastes are collected in four 18,000-gal stainless steel tanks in cells under the north end of the Waste Disposal Building. Two underground lines, one for first cycle waste and the other for combined second and third cycle wastes, conduct these solutions across the yard from the Process Building by gravity after the wastes have been lifted from their evaporators by steam jets. The raffinate wastes are segregated into two types to permit possible future recovery of fission products from the hotter first cycle solution. Three of the four collection tanks receive first cycle aqueous raffinate concentrate in a cascade arrangement which avoids the use of valves or diversion boxes. The first tank must fill and overflow to fill the second, which

DWG. 20054

[redacted]

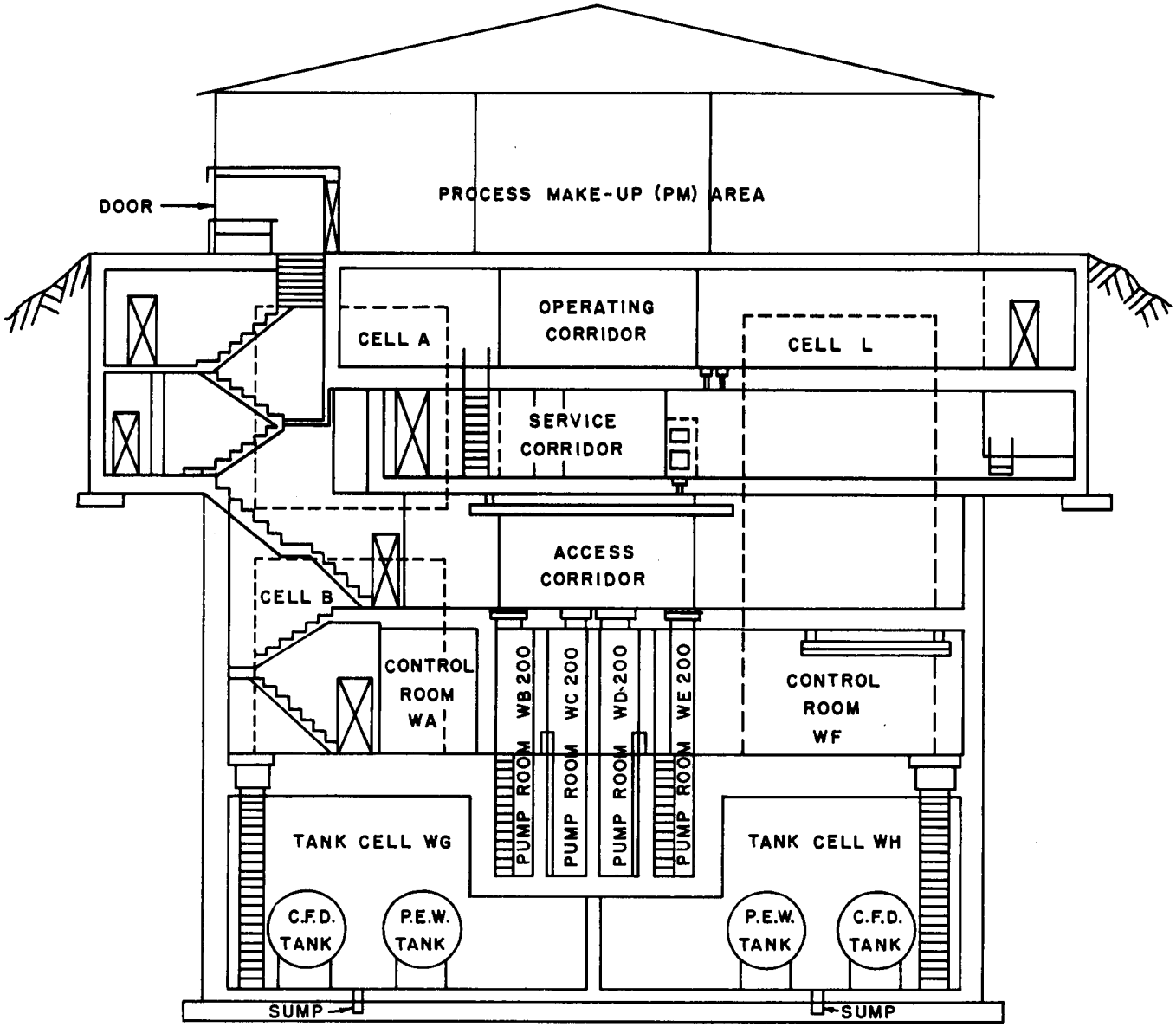

FIG. 3

CROSS SECTION OF PROCESS BUILDING C.P.P. 601

LOOKING NORTH FROM WASTE TANK AREA

must fill and overflow to fill the third. No lighting or ventilation has been provided in these cells, as access should seldom be required and would be impossible when hot waste is in the tanks. The first cycle cells have been equipped with stainless steel floors to facilitate their decontamination. The second and third cycle cell has been painted with acid-resistant paint for the same purpose. A stainless steel lining was not used because the activity level in the cell should not be high enough to cause radiation damage to paint. All the cells have sumps with liquid level alarms and transfer jets discharging to the Waste Tank Farm for use in the event of leaks in the collection tanks. The cells are shielded from the cold sampling corridor above them by a 5-ft-thick concrete ceiling, through which the cells are accessible by means of hatches.

All four raffinate waste tanks have spargers for agitation, samplers, liquid level and density recorders, temperature indicators, and submerged transfer jets. The three first cycle tanks have cooling coils to remove the heat generated by radioactive decay. It seems desirable to keep the concentrated aluminum nitrate solution below 150°F to minimize corrosion of the stainless steel tanks, although corrosion tests currently being run are inconclusive at the present time. The solution temperature must be kept well below the boiling point, at any rate, to permit transfer by steam jet. A reflux condenser serving all three tanks in parallel has been provided to prevent loss of water from the heated solution. This should prevent self-concentration and subsequent precipitation.

2.4 Waste Treatment Facilities.

The raffinate wastes receive no further treatment after they have been concentrated by evaporation in the Process Building. No treatment other than monitoring for radioactivity is given to the service waste. The C.F.D. waste is sampled in its collection tanks. If appreciable uranium, or radioactivity above the tolerance level for disposal is detected, the waste is treated as P.E.W. and handled accordingly. Otherwise, it is discharged to service waste for disposal.

The P.E.W. has its own treatment facility. This waste is transferred by two pumps from its collection tanks in the deep end of the Process Building to the waste evaporator surge tank in the north end of the Waste Disposal Building. This surge tank affords a holdup capacity of 18,000 gal and assures an adequate supply of feed for several days' operation of the evaporator, which serves to reduce the volume of the radioactive waste. The stainless steel surge tank is equipped with a sparger for agitation, a sampler, liquid level and density recorders, a temperature indicator, and submerged jets discharging to the P.E.W. evaporator.

The main components of the evaporator system are a gravity feed tank supplied by the surge tank jets, a flash tank, which also serves to accumulate concentrated waste before dumping, an external heat exchanger (reboiler), a bubble cap de-entraining tower, a vapor condenser, and two condensate receivers. Auxiliary equipment consists of a vacuum system, which includes a steam jet air ejector with after-condenser and catch tank, and the reboiler steam condensate system, which includes a catch tank and two pumps for discharging the steam condensate to service waste. Two other pumps discharge the condensate from the evaporation to service waste or to the Process Building for possible use as demineralized water. The use of a pump to recirculate the hot waste between the reboiler and the flash tank was avoided by employing a thermosyphon arrangement utilizing natural convection to achieve the recirculation.

The evaporation is semicontinuous in that the vapor is boiled off continuously, but the concentrate is accumulated in the flash tank and is dumped batchwise. A density recorder on the flash tank indicates when to dump the concentrate, which is sent to the collection tank for second and third cycle aqueous raffinate concentrate. Ultimately the concentrate is stored in the Waste Tank Farm.

The evaporator was designed to remove 350 gal of water per hour from the P.E.W., which is normally a caustic solution because of sodium hydroxide in the solvent treatment waste and filter backwashes. It was estimated that the evaporator would decontaminate the condensate by a factor of 10^5 over the feed by means of the de-entraining devices such as the multiple changes in direction of the vapor flow, the tangential entry into the bubble cap tower, the travel through long distances in large vessels, and the bubble cap trays. The early runs with feed containing gross beta activity of 10^5 to 10^6 c/m/ml, however, have yielded decontamination factors of only 10^3 to 10^4 for the condensate over the feed at evaporation rates of 450 gal/hr. These factors should improve with hotter feed and with proper operating conditions to reduce the activity in the condensate below 10^2 beta c/m/ml. The early runs demonstrate that the evaporator operates easily at high rates, responding well to its controls. Rates as high as 1150 gal/hr have been achieved with P.E.W. from the ICPP cold runs. Details of these operational tests are given in the Appendix, Sect. 10.7.

Physically, the evaporator equipment is quite large, as can be seen in Fig. 4, which shows the arrangement of the equipment in the Waste Disposal Building. The evaporation cell, housing the feed tank, flash

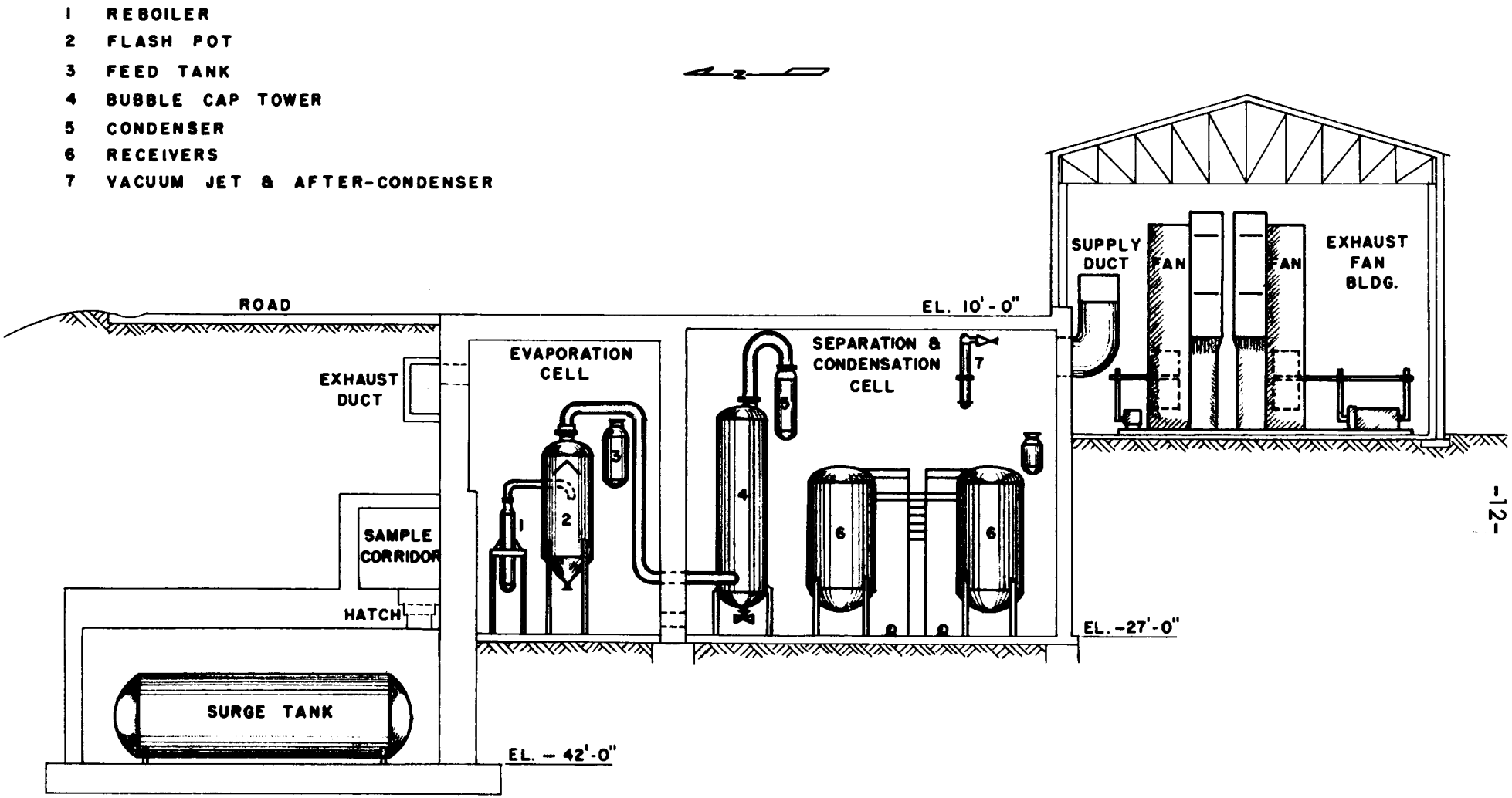

SECTION THROUGH WASTE DISPOSAL BUILDING
LOOKING EAST

FIG. 4

DWG. NO. 19374

[redacted]

tank, and reboiler, is 35 ft tall and 18 by 22 ft in area. It is equipped with a stainless steel floor and a drain to the surge tank for use during decontamination. The cell has 3-ft-thick shielding walls to protect adjacent cold areas. The separation and condensation cell, a cold area requiring no shielding walls, is 35 ft tall and 46 ft long. All the evaporator equipment is mounted along the east walls of these two cells to leave room for future equipment. All the evaporator equipment except the steam condensate catch tank and pumps (not shown in Fig. 4) is stainless steel to facilitate decontamination.

The Waste Disposal Building forms a unit structure with the Exhaust Blower Building as shown in Fig. 5. The entire processing area of the Waste Disposal Building is underground, but a steel frame structure with transite siding and gabled roof occupies the center portion above ground to house electrical switch gear and an oxygen-nitrogen separation facility for off-gas treatment. The underground portion of the building is divided into four sections: (1) the three center corridors providing operating space on the top level, a space for pipe connecting the various parts of the building at midlevel, and a means of access to the cells at bottom level; (2) the three off-gas processing cells on the west side of the building; (3) the two evaporator cells on the east side; and (4) the three collection tank cells at the north end of the building.

2.5 Waste Storage Facilities

The Waste Tank Farm is the underground storage area for concentrated radioactive waste. Figure 6 is a plan view of the Waste Tank Farm and waste disposal area. Two 300,000-gal stainless steel permanent storage tanks have been provided, one for first cycle aqueous raffinate concentrate and one for combined second and third cycle aqueous raffinate concentrate and concentrate from the P.E.W. evaporator. Space has been provided for a number of future tanks, although the existing tanks have sufficient capacity for several years' operation of the ICPP. The two tanks are each 50 ft in diameter and 32 ft tall with umbrella roofs capable of supporting themselves without beams. The tanks cannot support the earth load above them, however, so they have been housed in two octagonal concrete enclosures. The roofs of these enclosures plus 8 ft of earth cover provide shielding to protect surrounding areas from the extremely radioactive waste in the tanks. Figures 10 through 17, pp.33,36-40, and 42 - 43, were taken at various stages in the construction of these tanks and illustrate the design features incorporated in them.

Both permanent storage tanks are equipped with liquid level and density recorders, multiple thermocouples for measuring the temperature

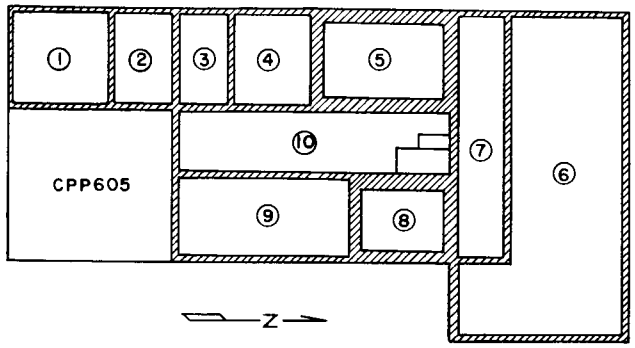

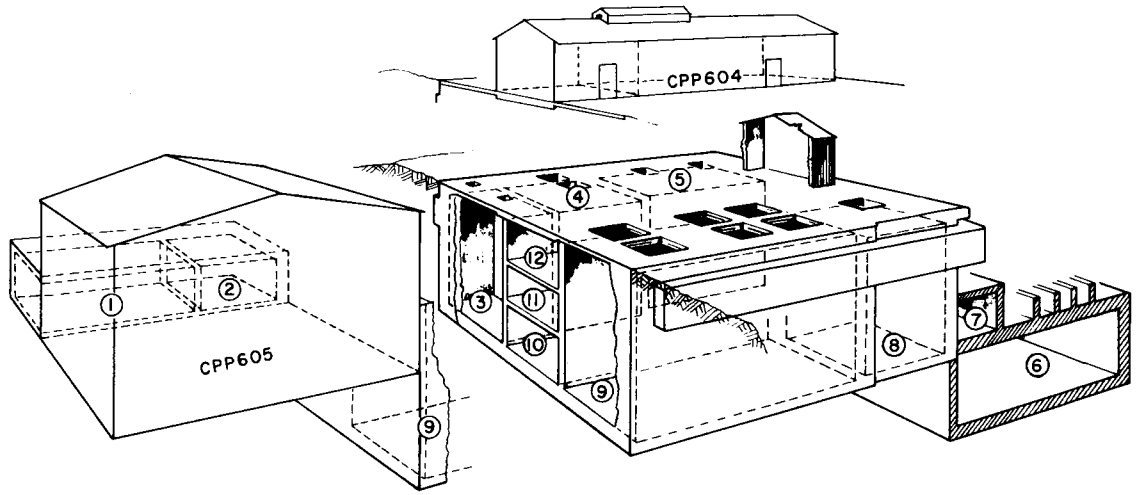

1. OFF-GAS BLOWER CELL
2. OFF-GAS FILTER CELL
3. OFF-GAS STORAGE
4. NORMAL OFF-GAS CELL
5. HOT OFF-GAS CELL
6. STORAGE TANK CELLS
7. SAMPLE CORRIDOR
8. EVAPORATOR CELL
9. SEPARATION AND CONDENSATION CELL
10. ACCESS CORRIDOR
11. PIPE CORRIDOR
12. OPERATING CORRIDOR

[redacted]

DWG. 18598

FIGURE 5
EXPLODED VIEW AND PLAN
WASTE DISPOSAL BLDG. CPP604 AND EXHAUST BLOWER BLDG. CPP605

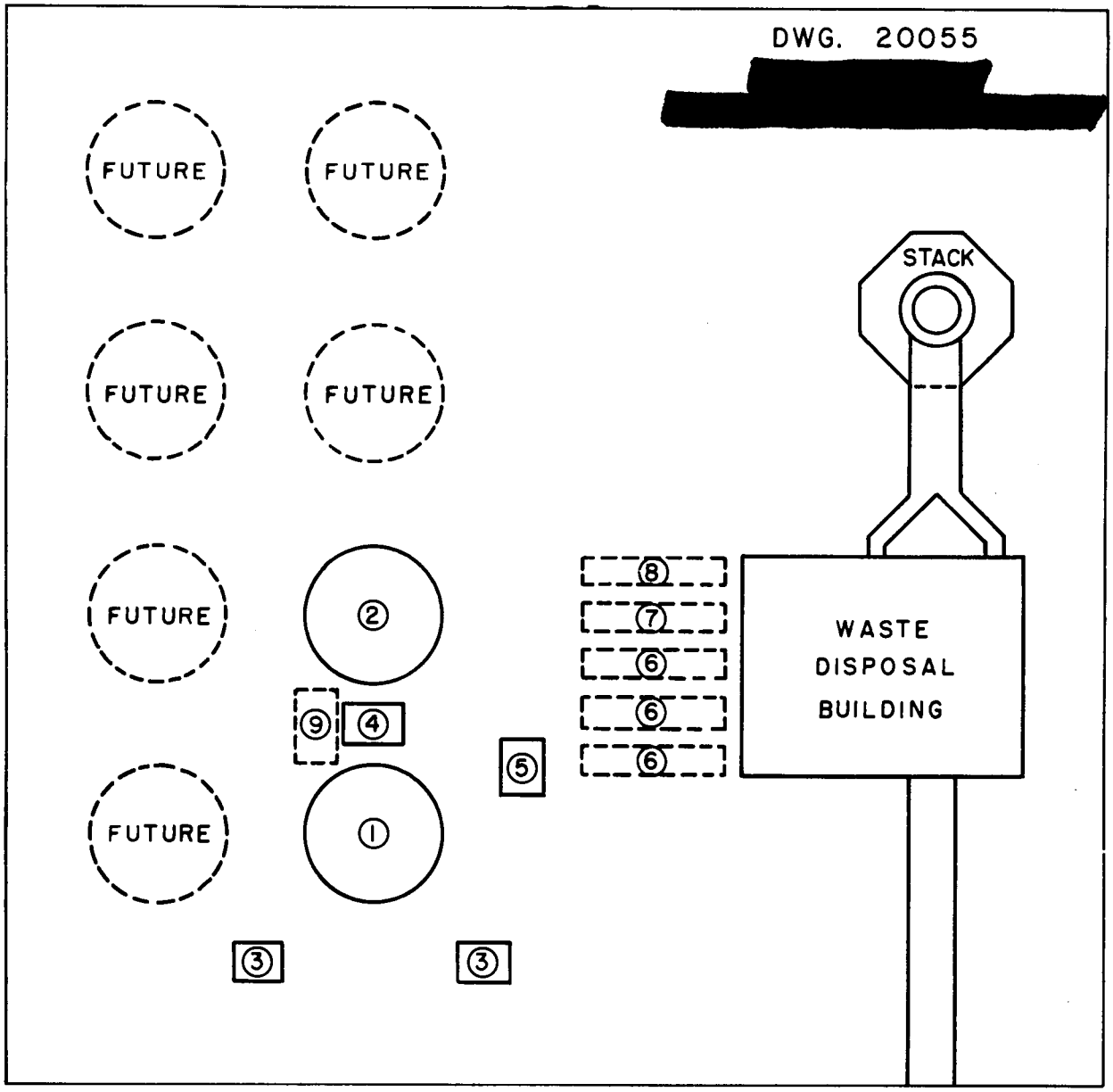

① Permanent storage tank for First Cycle Raffinate Concentrate.

② Permanent storage tank for Second and Third Cycle Raffinate Concentrate.

③ Reflux condensers for ①.

④ Instrument House.

⑤ Reflux condenser for ⑥.

⑥ Collection tanks for First Cycle Raffinate Concentrate.

⑦ Collection tank for Second and Third Cycle Raffinate Concentrate.

⑧ P. E. W. Evaporator surge tank.

⑨ Future heat exchanger building.

FIG. 6

WASTE TANK FARM AND DISPOSAL AREA

at various depths, and pressure-vacuum relief valves discharging to the stack. Access pipes, which are 12-in.-diameter stainless steel tubes rising from the tops of the tanks to ground level, have been provided about the peripheries and near the centers of both tanks. Pumps or jets can be lowered through these access risers to permit removal of the solution for recovering fission products. Both tanks have been equipped with spare inlet nozzles extending underground horizontally from the tanks 8 ft beyond the concrete enclosures to provide earth shielding from the tanks for workers making future connections.

Because the first cycle waste is heated continuously by radioactive decay, it has been necessary to provide two reflux condensers for its permanent storage tank. Vapor boiled off the first cycle waste passes through two 12-in. lines to the tops of the two condensers; the condensate drains from the bottoms of the condensers and returns to the tank by gravity flow. Each condenser is designed to handle the entire load of vapor from a tank full of boiling waste, and each can be isolated from the tank by flooding loop seals in the vapor lines to shut off the vapor flow. The condenser tubes can be decontaminated or descaled by introducing cleaning agents to them through funnels at ground level.

Because the corrosion data for concentrated aluminum nitrate at high temperatures is inconclusive, a cooling system has been designed to lower the temperatures of the stainless steel surfaces of the first cycle storage tank. Only the parts of the system requiring excavation have been installed; however, the remainder is to be completed if further corrosion information reveals the necessity. The proposed cooling system consists of a coil inside the tank to protect the tank bottom, and a cascade of water over the top and sides to keep these surfaces cool. The cooling water would be collected in a sump in the floor of the concrete enclosure and recirculated through heat exchangers by means of deep well pumps in the sump.

2.6 Disposal Facilities for Service Waste

Service waste is the cold waste discharged from the ICPP area. The two headers described in Sect. 2.2 conduct this waste from the Laboratory and Process Buildings to the Monitoring Station in the yard. Service waste from the Waste Disposal Building and the Tank Farm also flows by gravity to this station. In the Monitoring station, which is a small underground concrete building having two levels, each of the waste streams enters a small compartment in the lower level before

mixing with the other streams. This permits each stream to be sampled separately and assists in tracing any radioactivity to its source. The entire service waste stream flows over a weir in the station for flow measurement and then continues by gravity flow to the Disposal Well, which conducts it to the underground river.

The Service Waste Monitoring Station has been designed about the Hurst continuous-flow water monitor developed in the ORNL Health Physics Division. Waste water is pumped through a brass can into which a Geiger counter tube fits. The water enters the can tangentially, swirls about the tube without wetting it, and falls out the open bottom. This arrangement of the water cell affords maximum counting geometry with minimum contamination of the tube. Two water cells are operated together, one counting the waste and the other counting tap water. At regular intervals the roles of the two cells are reversed automatically to permit background activity to build up on both at an even rate. The output voltages from the two Geiger tubes are fed to a difference amplifier, which subtracts the background measurement to give a true reading of radioactivity in the waste flowing through the station at any given time. Indicating and recording instruments for flow and radioactivity are so arranged that a continuous record of curies of activity discharged from the plant is kept. A sampling pump is provided to collect a composite waste sample whose volume is proportional to the waste flow during the time the sample is collected. The sample can be analyzed in laboratory counting equipment to give a reliable check on the continuous monitoring equipment.

3.0 FIRST CYCLE AQUEOUS RAFFINATE CONCENTRATE

3.1 Production Rate

First cycle aqueous raffinate concentrate originates in Cell U of the Process Building as the product of the first cycle raffinate evaporation. This concentrate is jetted to a special drain in the east wall of the cell from evaporators U-129 and U-130 and from salvage vessels J-118, J-119, and J-120. Figure 7 is a simplified flowsheet showing how this waste is handled. First cycle raffinate from NP, MTR, and EBR fuel processing is normally evaporated in 150-gal batches to a density corresponding to an aluminum nitrate concentration of 2.200 M, yielding about 95 gal of concentrate per batch. This is transferred to the drain as soon as it has cooled to 50°C for easy jetting. Table 1 gives the production rate for first cycle aqueous raffinate concentrate for the various fuel types based on the original design capacity of the ICPP (3.9 kg of uranium per 24 hr for NP fuel, 3.2 kg for MTR, and 22 kg for EBR). Production of the concentrate for a 1.0 kg per day uranium rate for NP fuel is about 30% of that for the higher rate.

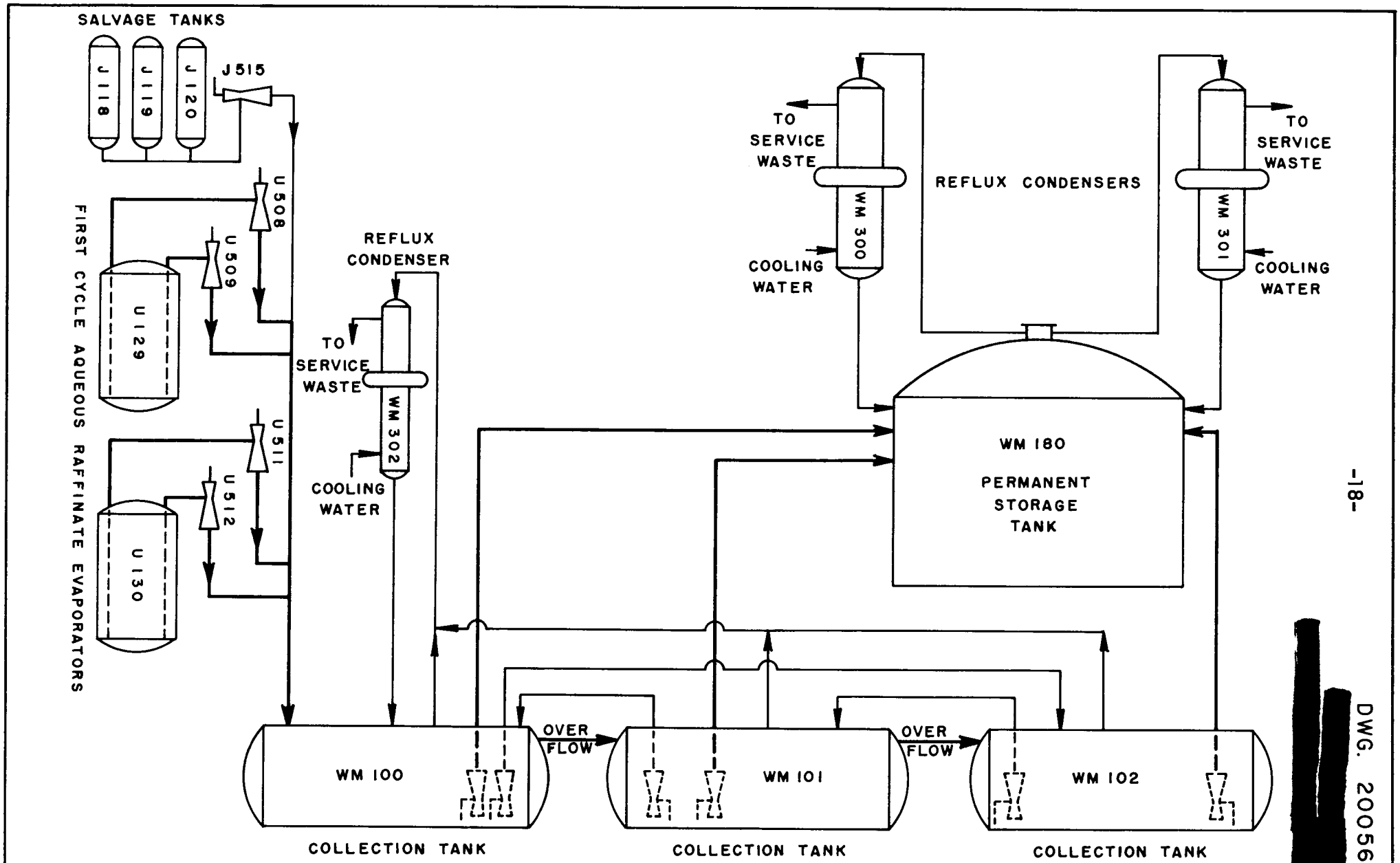

FIG. 7
FIRST CYCLE AQUEOUS RAFFINATE SYSTEM

DWG. 20056

[redacted]

Table 1

Production of First Cycle Aqueous Raffinate Concentrate*

	NP		MTR		EBR		Total
No. of 95-gal batches per 24 hr	4		7		2		7 max.
Daily production (gal)	340		640		200		640 max.
Production days per year	240	+	25	+	10	=	275
Yearly production (gal)	80,000	+	16,000	+	2,000	=	98,000

* From ORNL CF-51-6-53; see also drawing EP-6910 and ORNL CF-50-8-146 for design estimates of waste production.

The following reference drawings give the details of the equipment for the evaporation of first cycle aqueous raffinate:

Engineering flowsheets	542-21-P1314 (Cell J) 542-21-P1327 (Cell U)
Piping drawings	542-11-P655 (Cell U) 542-11-P660 (Cell U)

3.2 Composition and Radioactivity

Because the concentrate from the first cycle raffinate evaporation contains 99.99% of the fission products from the burnup of U^{235}, it is the most highly radioactive waste handled in the ICPP. The activity level and composition vary with the type fuel processed and with the fuel cooling time. Table 2 gives the design radioactivity levels for MTR and NP fuels, the two most radioactive fuels to be processed. The MTR level of 5×10^{10} beta c/m/ml has been the basis for the shielding design in the ICPP.

Table 2

Radioactivity in the First Cycle Aqueous Raffinate Concentrate

	NP (120-day cooling)	MTR (100-day cooling)
Total beta activity per g of U^{235} in fuel, design value (curies)*	33.6	221
U^{235} present in first cycle extraction feed (g/liter)	2.3	0.994
Volume ratio of feed to raffinate	4/5	4/5
Volume ratio of raffinate to concentrate from first cycle evaporation	1.5/1	1.5/1
Total beta activity in first cycle raffinate concentrate (curies/liter)	92.7	263
Total beta activity in first cycle raffinate concentrate (c/m/ml)	2.0×10^{10}	5.75×10^{10}

* From Table II of IDO-26,058-ORNL. Other data are from ORNL CF-51-6-53. See Appendix, Sect. 10.6.1.

Table 3 gives the chemical composition of the first cycle aqueous raffinate concentrate for the various fuels.

Table 3

Composition of the First Cycle Aqueous Raffinate Concentrate

Composition	NP	MTR	EBR
Density at 25°C (g/ml)	1.3679	1.3500	1.3303
NH_4NO_3 (N)	1.5030	0.788	--
$Hg(NO_3)_2$ (M)	0.0037	0.0033	--
NH_3 (M)	0.2973	0.2973	0.288
$Al(NO_3)_2$ (M)	2.200	2.200	2.200
$Fe(NH_2SO_3)_2$ (M)	--	--	0.743

3.3 Collection and Storage

After concentration by evaporation in Cell U of the Process Building, no further treatment is given the first cycle aqueous raffinate. Because its intense radioactivity prevents its being discharged from the plant site, the concentrate must be collected and stored. A considerable saving in stainless steel was effected by installing one large (300,000-gal), field-erected storage tank for this concentrate instead of several shop-fabricated tanks with equivalent capacity. The height of the tanks and the heavy earth shielding above it required that its base be 50 ft below ground, making a difficult lift problem to get the solution from the tank for a future recovery process. In order to provide an easy means of access to intermediate volumes of this waste, three smaller collection tanks (WM 100, WM 101, and WM 102) were installed in two concrete cells in the Waste Disposal Building. The piping for these tanks has been so arranged that they can easily be connected to facilities for a future recovery process. Although one collection tank would have been sufficient for this purpose, the other two were added to provide temporary storage capacity to avoid using the large storage tank until corrosion tests at Oak Ridge can determine the effect of this concentrated $Al(NO_3)_3$ at boiling temperature on stainless steel. The waste can be cooled temporarily by coils in the collection tanks, but a cooling system for the large storage tank is too expensive to build unless it is absolutely necessary for protection of the tank.

3.4 Details of Waste Handling Equipment (See Fig. 8)

3.4.1 Collection Tanks WM 100, WM 101, and WM 102

The three collection tanks are identical vessels mounted on saddles near the ends. Table 4 lists the design characteristics of these three tanks.

The first cycle aqueous raffinate concentrate flows by gravity from the special drain in Cell U of the Process Building to collection tank WM 100 through a 3-in. stainless steel line. The pipe is supported in 6-in. tile pipe provided with a sampling box every 50 ft of its length across the yard between the buildings. This leak-detection system is described fully in Sect. 8.1. Tank WM 100 overflows to WM 101, which overflows to WM 102. This cascade arrangement eliminates the use of valves. All the nozzles on the collection tanks are either welded or provided with ring-type flanged joints because organic gasket material cannot endure the intense radiation.

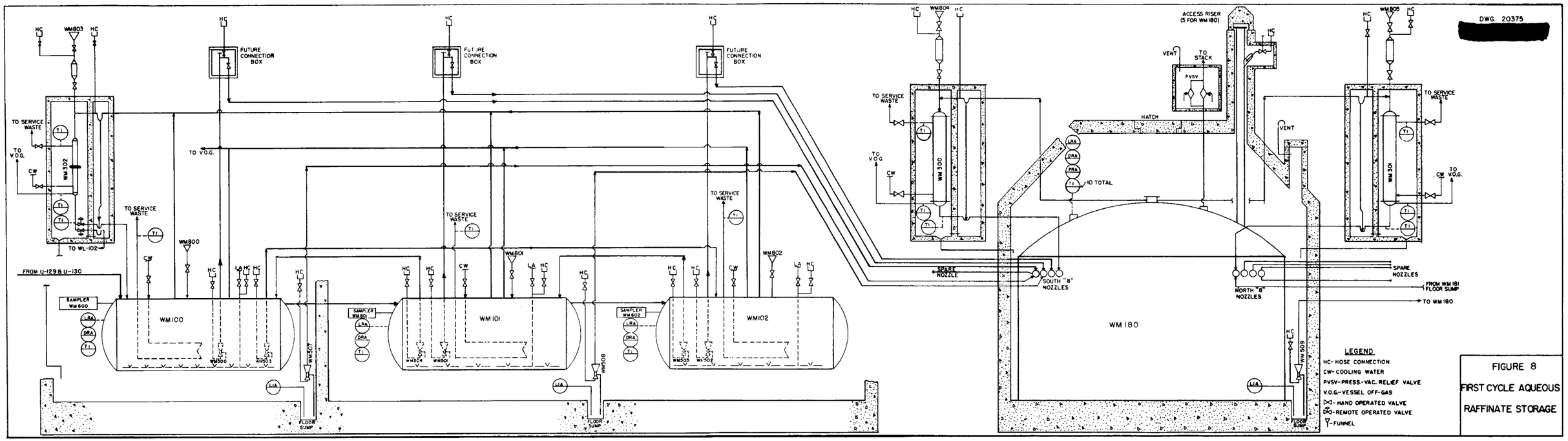

FIGURE 8

FIRST CYCLE AQUEOUS RAFFINATE STORAGE

Table 4

Design Data for Collection Tanks WM 100, WM 101, and WM 102

Description	Horizontal cylinders with dished ends
Capacity of each tank	18,400 gal
Dimensions	Straight side length, 30 ft 0 in.; o.d., 10 ft 0 in.; ends, 7/16 in. thick; shell, 5/16 in. thick
Materials of construction	Ends and shell, type 347 stainless steel; bolting, type 302 stainless steel
Design pressure	Atmospheric
Design temperature	200°F
Operating pressure	Atmospheric
Operating temperature	100°F
Fabricator	Foster Wheeler Corp., Dwgs. H-33087, H-33089
Construction data	Stress relieved by heat treating; pickled and passivated; welds radiographed (for testing and inspection procedure, see ORNL CF-50-10-137)
Purchase data	Vessel sketch 542-12-V500E; Bechtel P.O. 1699-OR-10
Costs, each tank	Materials $18,397 Fabrication 16,849 Total $35,246 (exclusive of piping and installation)

The two cells housing the collection tanks are provided with stainless steel floors which slope toward sumps 2 ft square and 4 ft deep. These sumps are provided with level indicator-alarms (LIA-3-WM and LIA-4-WM) and with 1-1/2 in. transfer jets (WM 507 and WM 508, see Table 37 in the Appendix) discharging to permanent storage tank WM 180. The discharge lines from these jets are not included in the leak detection system.

a. Transfer Jets and Lines. Submerged jets (see Table 37 in the Appendix) in the collection tanks provide a means of transferring the waste from one tank to another and to the permanent storage tank. The collection tanks are sloped toward the two jets in the end of each tank to permit the jets to leave a minimum heel. The jets are mounted through 14-in.flanged nozzles in the tops of the tanks for easy removal. Three 3-in. stainless steel discharge lines from these jets to the storage tank in the Waste Tank Farm are supported in a tile pipe leak-detection system. These lines rise from the bottom level of the collection tanks to three concrete boxes buried 6 ft below ground level. A blanked-off tee for connecting the tanks to a future process has been provided in each line in its box. A valve on the downstream leg of each line will shut off the flow to the storage tank and divert the waste to the future recovery facilities. Decontaminating agents for cleaning the lines before the boxes are excavated can be introduced through hose connections at ground level and valves in the boxes with extension handles to ground level. The boxes are located 6 ft below ground to keep them below frost line and to utilize the earth cover as a shield against radiation from the lines.

The 1-in. steam supply pipe to each jet is encased in a 3-in. stainless steel pipe inside the tank for insulation from the liquid in the tank. These steam supply lines originate from hose connections upstream from the jet control valves and strainers in the Waste Disposal Building operating corridor without connecting directly to the steam header. One hose equipped with snap-on couplings and capable of reaching the connections to jets and spargers for all three tanks is used to conduct steam from convenience outlets to these connections. The hose arrangement minimizes leakage of fluids into the collection tanks because of faulty valves or operating errors. The supply lines are stainless steel from the strainers to the jets to avoid introduction of scale and rust into the jet orifices.

b. Instruments. The three collection tanks are equipped with liquid level recorder-alarms (LRA's), density recorder-alarms (DRA's) and temperature indicators (TI's) to provide a continuous record of

conditions in the tanks. Section 10.5.3 in the Appendix lists the instruments by code number. The density and level instruments, including those for the cell sumps, are the differential pressure type actuated by a purge of dry air and equipped with pneumatic transmitters for remote operation. Two sets of dip tubes are provided for each LRA and DRA, the spare tubes also being purged with a continuous stream of instrument air. The temperature instruments are composed of iron-constantan thermocouples, range 0 to 125°C, with radiation resistant lead wire to a 48-point Brown indicator. All the indicators, recorders, and alarms are mounted on a panel board in the operating corridor.

c. Spargers. Each tank is provided with a sparger operated by low-pressure (50-psig) air or steam for agitation and for steam cleaning the tanks. Each sparger is composed of two 10-ft-long sections of 1-in. stainless steel pipe mounted just above the tank bottom and perforated with 20 holes 3/32 in. in diameter plus one 1/8-in. weep hole. The design calculations for the sparger are given in the Appendix, Sect. 10.6.3. Low-pressure air is connected directly to the spargers through valves in the operating corridor, but the steam must be supplied through a hose connection similar to that for the transfer jets. Water for flushing the lines and tanks can be introduced through the sparger hose connections.

d. Off-Gas Connection. Each collection tank has a 3-in. line to the vessel off-gas system for venting during decontamination or sparging to prevent overloading the reflux condenser of the three tanks. Valves in these lines in the sample corridor are normally closed because the tanks normally vent to the vessel off-gas system through their common reflux condenser.

e. Addition Funnels WM 800, WM 801, and WM 802. Each tank has a funnel connection for the introduction of decontaminating agents or other fluids. The funnels and their valves are located at ground level above the tank cells.

f. Samplers WM 600, WM 601, and WM 602. Each tank is equipped with a sampler located in the sample corridor above the tank cells. Samplers are described fully in Sect. 8.2. The yard pipe samplers in the leak-detection system are also located in the sample corridor.

g. Cooling Coils. Each collection tank is equipped with two banks of cooling coils fabricated from 1-in. stainless steel pipe arranged in two passes for each bank. The 700 ft of pipe (about 240 ft^2 of heat transfer surface) is arranged so that the cooling water

enters the top coils, passes to the lower coils, and leaves from the bottom coils, thus giving countercurrent flow whereby the warmest part of the tank is cooled by the coldest water. The cooling coils remove heat generated by radioactive decay (see ORNL CF-50-10-167, CF-52-2-207, and CF-51-6-12) at an estimated rate of 204,000 Btu per hour for 17,000 gal. They are designed to keep the first cycle aqueous raffinate concentrate at 130°F or cooler to minimize corrosion of the tanks and to permit the transfer jets to operate. The calculations for sizing the coils can be found in the Appendix, Sect. 10.6.4. Approximately 20 gal of water per minute at 55°F is required to cool each collection tank.

h. Cooling Water Supply to Collection Tank Coils. Because early calculations indicated that the 55°F cooling water might cause poor heat transfer owing to stratification and caking on the coils, the cooling water supply to the collection tanks has been arranged to use either cold treated water or heated water from the waste evaporator main condenser (WL 301). A pressure controller valve (PC-2-WL) in the condenser cooling water discharge line to service waste diverts part of this warmed water to the collection tank coils. The temperature of this water can be raised above its normal 95°F by throttling the supply to the condenser, using a remotely operated valve (RVC-22-WL). The cold treated water is supplied to the coils through a valve operated by a temperature indicator-controller (TIC-1-WM), which measures the temperature of the outlet water from the coils and adjusts the flow of the supply water to keep this temperature at the point set on the controller. A small stream of cold treated water is constantly fed to the coils through a fixed orifice (FE-4-WM) in a bypass around the controller valve to assure a sufficient flow in the system at all times for the controller to receive a temperature reading. The purpose of the temperature controller is to prevent overheating the collection tanks in the event the water from the evaporator condenser is too warm. Cold treated water can also be admitted to the coils through a manual valve. Later calculations (ORNL CF-52-3-34) indicate that it is not necessary to use the warmed water from the condenser. This system is shown diagrammatically in Fig. 9. Details are given on Flowsheets 542-41-P371 and 542-41-P372, which are not reproduced here.

Manual valves are provided in both the supply and discharge lines for the coils of each tank. Orifices (FE's) for measuring the flow have been provided in the discharge lines to assist in balancing the flow of water to the three tanks from the common supply header. The thermowell in each discharge line connects to a temperature-indicating point on the 48-point Brown instrument in the operating corridor. Section 10.5 in the Appendix describes the instruments in this system.

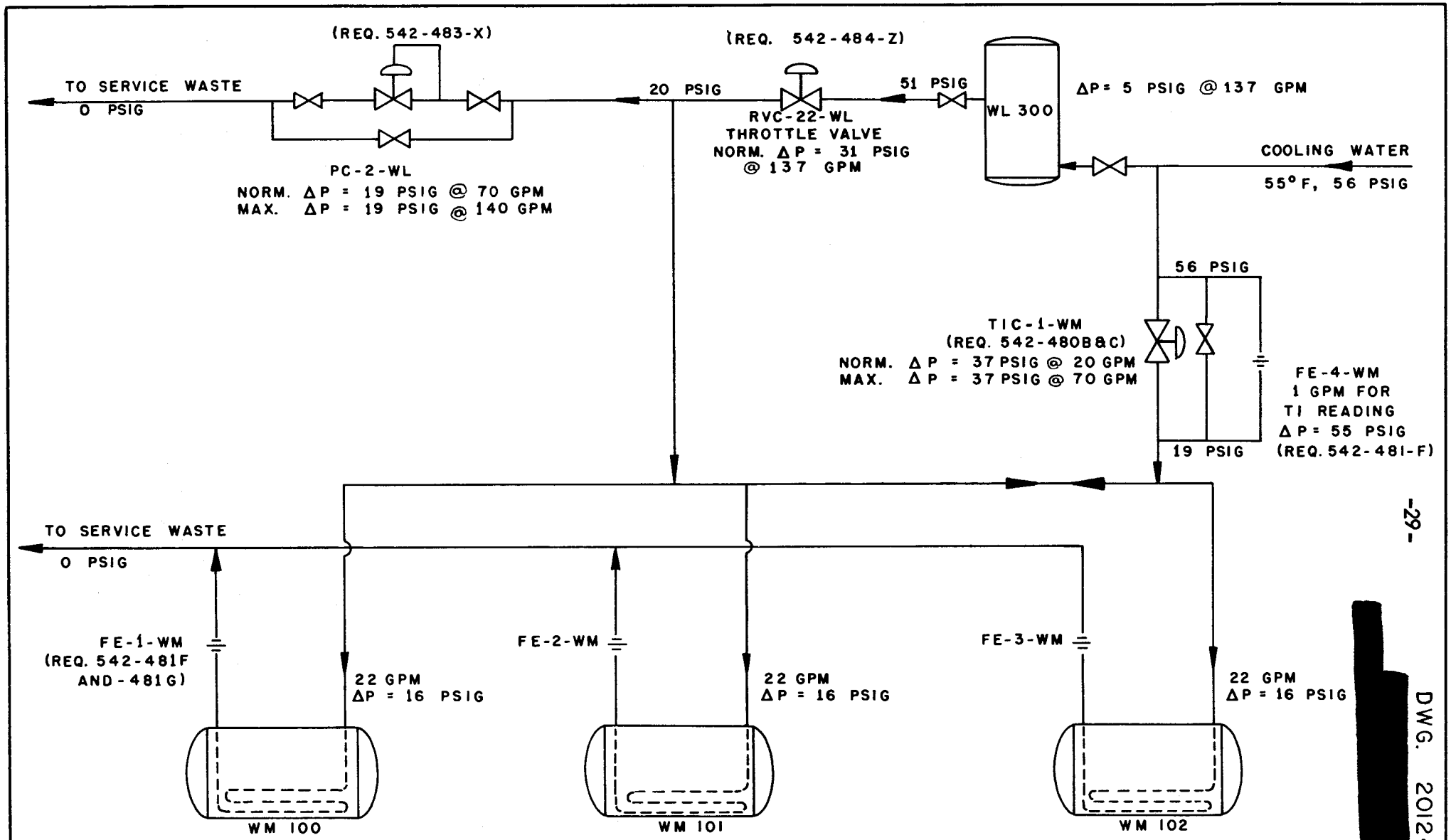

FIGURE 9

FLOW THROUGH COOLING SYSTEM FOR RAFFINATE COLLECTION TANKS

DWG. 20124

i. Reflux Condenser WM 302. Reflux condenser WM 302 has been provided to condense the vapors from the three collection tanks and to drain the condensed water to tank WM 100 or to the waste evaporator surge tank (WL 102). Even with the condenser, evaporation will cause concentration of the raffinate in tanks WM 101 and WM 102 and a corresponding dilution of the liquid in WM 100 because of the drain to the one tank. Transferring the waste from WM 100 to the other tanks as necessary will compensate for this difficulty. If for any reason it is desired to concentrate the contents of the three tanks, this can be accomplished by closing a remotely operated valve in the condenser drain to WM 100 (RVC-1-WM) and opening a similar valve (RVC-2-WM) in the drain to the evaporator surge tank. This arrangement can also be used to prevent dilution of the raffinate in WM 100 while the condenser is being decontaminated.

The condenser is housed in a concrete pit buried with its top flush with the ground near the tank cells. The top is a set of three slabs which can be removed when access to the condenser is necessary. The condenser is supported in one compartment separated by a shielding wall from another compartment housing loop seals. The condenser tubes can be shut off from the vapors from the tanks by admitting a stream of water to a loop seal in the 4-in. stainless steel vapor line from the tanks. The water is introduced through a 1/2-in. hose connection at ground level and a 1/4-in. needle valve underground with an extension handle to ground level. The loop seal normally remains open for the vapors because any liquid in it drains out through a 3/8-in. pipe to the drain to WM 100. Water under pressure from the hose connection can be introduced faster than the drain can take it away, closing the seal to separate the condenser from the tanks. The drain lines contain loop seals which stay filled at all times. When the vapor loop seal is closed and the condenser is decontaminated, the condenser side of the partition can be entered. This side has a drain to the WM 100 cell sump. Decontaminating agents can be introduced to the condenser tubes by a hose connection and valve at ground level. The condenser tubes are vented to the vessel off-gas system through a 3-in. stainless steel underground line.

Cooling water to and from the condenser flows through 3-in. carbon steel lines and cast steel valves buried underground with extension handles to ground level. Inside the pit the water lines are stainless steel. Normally, treated water is supplied to cool the condenser, but a connection through a double valve arrangement between the treated water header and the fire water header has been provided to utilize fire water in the event of a failure of the treated water system. Thermowells in the outlet water line, the off-gas line, and the condensate drain connect to the 48-point Brown temperature indicator in the operating

corridor. The wires to the panel board run underground through "Sheraduct" conduit from a junction box outside the condenser pit. A schedule of the temperature indicator (TI) points is given in the Appendix, Sect. 10.5.3.

Table 5 gives the design characteristics of condenser WM 302.

Table 5

Design Data for Reflux Condenser WM 302

Description	Vertical cylindrical shell-and-tube heat exchanger with internal baffles
Duty	To condense 350 lb of water per hour, entering at 200°F and to cool to 120°F; 368,000 Btu/hr at calculated U of 33 Btu/hr/ft^2/°F; LMDT = 81°F
Water	16.4 gal/min, entering at 55°F and leaving at 100°F
Tubes	88 tubes, 3/4 in. o.d., 8 ft 1-1/16 in. long; No. 16 BWG; total heat transfer surface = 138 ft^2
Baffles	16 segmental baffles equally spaced
Shell and ends	Straight side, 11 ft 0 in.; o.d., 12-3/4 in.; expansion section at center, 22 in. o.d.; all 3/16 in. thick; ends 3/8 in. thick
Materials of construction	All construction of type 347 stainless steel
Design pressure	Shell, 110 psig; tubes, full vacuum
Operating pressure	Shell, 85 psig; tubes, atmospheric (12.2 psia)
Operating temperature	Shell, 100°F; tubes, 200°F
Fabricator	Foster Wheeler Corp., Dwg. H-33064
Construction data	No heat treatment; pickled and passivated; welds radiographed (for testing and inspection procedure, see ORNL CF-50-10-137)
Purchase data	Vessel sketch FWV-108-E; Foster Wheeler Req. 542-445G; Bechtel P.O. 1699-OR-16A
Costs	Materials $1,130 Fabrication 2,146 Total $3,276 (exclusive of piping and installation)

j. Reference Drawings for Collection Tanks. The following drawings give the details of the first cycle aqueous raffinate concentrate collection tanks, the arrangement, piping, and component parts:

Engineering flowsheets	542-41-P372 542-41-P379
Piping drawings	542-41-P746 542-41-P750 542-41-P752 542-41-P753 542-41-P754
Instrument drawings	542-41-C921 542-41-C922 542-41-C924 542-41-C968 542-41-C971
Concrete drawings	542-41-F721 542-41-F735 542-41-F742

3.4.2 Permanent Storage Tank WM 180

The permanent storage tank for the first cycle aqueous raffinate concentrate is an umbrella-roofed stainless steel tank 50 ft in diameter and approximately 32 ft from bottom to roof top. Its effective capacity is 318,000 gal measured to the bottom of its side nozzles, leaving a large vapor dome above the maximum liquid level. The tank is buried in the Waste Tank Farm in an octagonal-shaped concrete enclosure, whose roof is 8 ft below ground level to shield the surrounding area from the radioactive tank contents. The enclosure floor has a 2-ft-square by 4-ft-deep sump equipped with a level indicator-alarm (LIA-1-WM) and a transfer jet (WM 509 - Table 37 in the Appendix) discharging to the storage tank for second and third cycle aqueous raffinate concentrate which is buried nearby in a similar enclosure. The transmitter for the sump level alarm and the control valve for the jet are located in the small Instrument House above ground between the two tanks.

Figure 10 is a picture of the Tank Farm taken at the time the footings for the concrete enclosures were poured. It can be seen that the enclosures are set in bedrock, which had to be excavated to only a small depth because of the great depth of the gravel overburden at

Fig. 10. ICPP: Footings for Tank Farm, Looking West, April 27, 1951.

the site. Figure 11 is an aerial view of the Tank Farm and Waste Disposal Building at a later stage of construction. The two tanks can be seen rising inside their concrete enclosures. The umbrella roof of the first cycle raffinate storage tank is shown lying north of its enclosure. Figure 12 shows both tanks in their enclosures after the roofs have been installed. The roofs and bottoms of both tanks were fabricated above ground to permit them to be turned over for radiographing and Freon sniffer testing of the welds. Figures 13 and 14 show the heavy framing for the enclosure roofs required to support the earth load over the tanks using earthquake Class I construction. The enclosure roofs are 1-ft-thick concrete. Steel columns to support the forms for the enclosure roof beams were extended through the tank roofs during construction and removed after the concrete beams were able to carry the load. This design eliminated the necessity for permanent stainless steel columns inside the tanks.

Table 6 lists the design data for storage tank WM 180.

a. Nozzles. The storage tank is equipped with eight 12-in. nozzles and a 36-in.-cupola in the roof, four 8-in. nozzles in the south side, and four 8-in. nozzles in the north side. Figure 15 shows the side nozzles, all of which are located 1 ft below the top of the straight side of the tank. The nozzles on the south side receive the jet discharge lines from the collection tanks, the discharge lines from the sump jets in the collection tank cells, the discharge line from the sump jet in the concrete enclosure for the other Tank Farm storage tank, and the drain from a reflux condenser. Four spare side nozzles have been provided, three on the north side and one on the south. These nozzles extend as 4-in. pipes through sleeves in the enclosure walls to a point 8 ft beyond the enclosure, where they are blanked off. Three of these spares can be seen in Fig. 15. This arrangement affords earth shielding from the tank for workers making a future connection. Expansion bends have been provided in all jet lines connecting to the tank to protect the relatively thin tank walls from being deformed by stresses produced by the heated fluids transferred. The nozzles and their connections are of all-welded construction.

Five of the eight 12-in. roof nozzles are access pipes, which rise through concrete support columns to ground level. Four of these risers are located about the periphery of the tank 1 ft from the roof edge; the other is located 12 ft from the center of the tank. The purpose of these risers is to permit the installation of submerged pumps or jets for future recovery of valuable fission products. The

Table 6

Design Data for Permanent Storage Tank WM 180*

Description	Vertical cylinder with self-supporting umbrella roof
Capacity	Approximately 318,000 gal
Dimensions	Straight side height, 23 ft 0 in.; i.d., 50 ft 0 in.; umbrella roof height, 8 ft 8-5/16 in.; cupola height, 2 ft 0 in.; bottom plates, and lower side plates, 5/16 in. thick; upper side plates, 1/4 in. thick; roof plates, 3/16 in. thick
Materials of construction	All construction type 347 stainless steel
Design pressure	10 in. water max. positive, 2.5 in. water max. negative
Design temperature	250°F
Operating pressure	10 in. water max. positive, 2.5 in. water max. negative
Operating temperature	Start 50°F, rising to 200°F
Fabricator	Chicago Bridge & Iron Co., Dwgs. 1 through 7, contract 5-7915
Construction data	Plate annealed, pickled, and passivated before erection of tank; no treatment after welding; all welds radiographed and Freon tested for leaks
Purchase data	Bechtel P.O. 1699-OR-21
Costs	Materials $67,149 Fabrication 27,680 X-ray welds 6,000 Freon tests 1,800 Total $102,629 (exclusive of piping and installation)

* Data also applicable to Tank WM 181.

Fig. 11. ICPP: Aerial View, Looking South, Tank Farm and Waste Disposal Building, July 1, 1951.

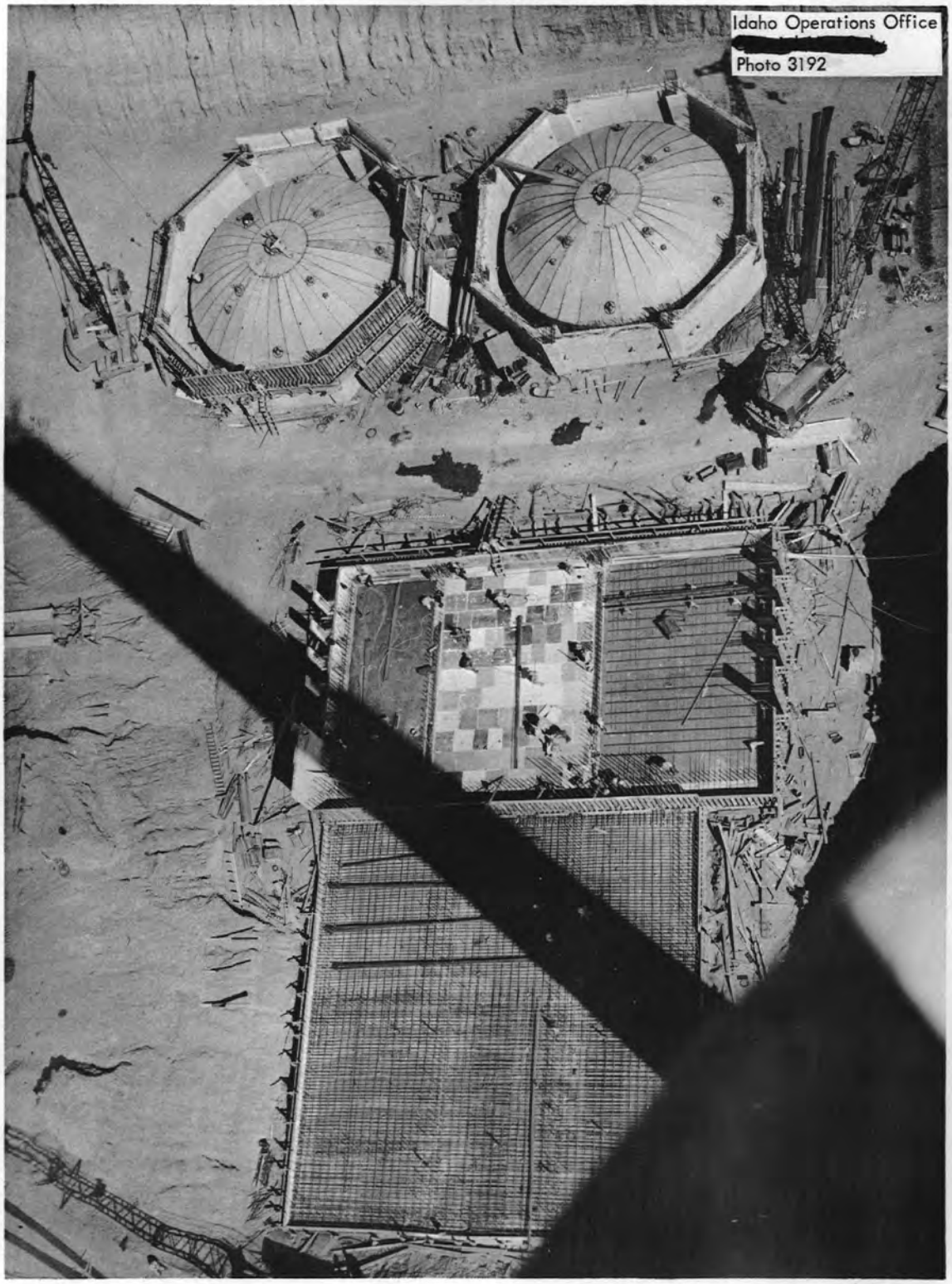

Fig. 12. ICPP: Waste Disposal Building on left; Waste Tank Farm on right, Looking Northwest from top of Stack, August 29, 1951.

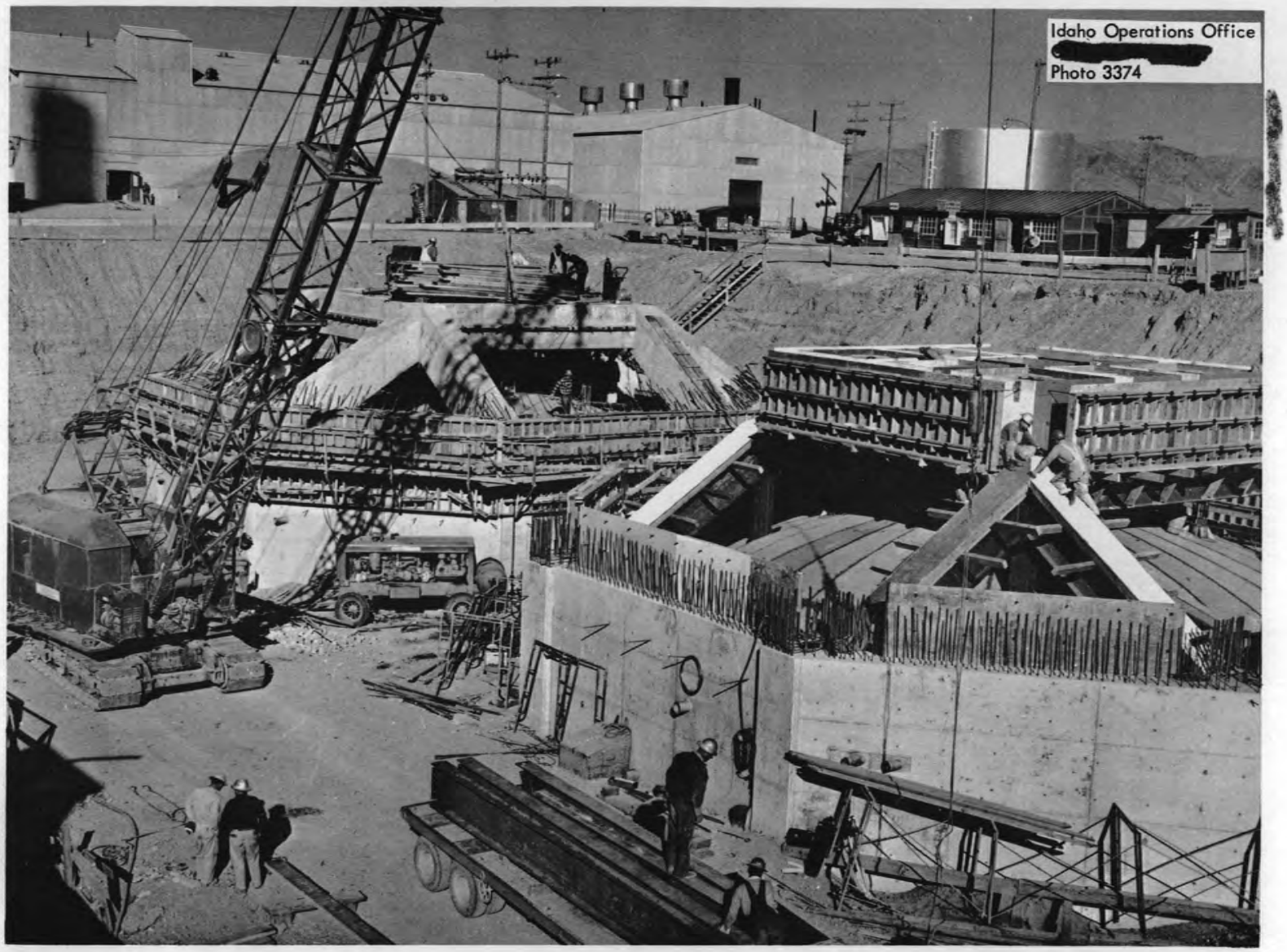

Fig. 13. ICPP: Waste Tank Farm, Looking Northeast, September 28, 1951.

Fig. 14. ICPP: Aerial View of ICPP Area Showing Tank Farm, Looking Southwest, October [redacted].

Fig. 15. ICPP: Tank Farm, Looking Southwest, July 30, 1951. [redacted]

arrangement provides access to all sides and to the center of the tank. The risers terminate at ground level in quick-opening flanges whose bolts can be manipulated by an extension wrench (shown in Dwg. 542-41-P749, which is not reproduced here). The concrete support columns terminate at ground level in platforms to support large concrete shielding blocks, which protect the area from the radioactive rays emanating from the tank through the risers. The blocks are not fastened to the platforms and can be moved by a crane when access to the risers is required. Figure 16 is a picture taken before the support columns for the risers were buried in the backfill. These columns and the shielding blocks atop them can be seen.

Each of the five risers is provided with a spray nozzle mounted at an angle in a branch in the riser to leave unobstructed clearance in the 12-in. section. A 2-in. stainless steel line containing a valve supplies fluid to each spray nozzle. One of these valves can be seen in Fig. 16, housed in its concrete box on the side of a support column. These boxes are buried 6 ft below ground for frost protection, and extension handles for the valves rise to ground level for access. These handles and hose connections for the spray nozzle supply lines are housed in shallow, metal-covered concrete boxes, also supported by the concrete columns, as can be seen in Fig. 16. The purpose of this entire arrangement is to permit the introduction of a spray of water or decontaminating agent into the 12-in. risers in preparation for opening them. The spray is designed to knock down vapors rising from the tank and to clean the interior of the risers before the shielding blocks are removed. Figure 17 is a picture of the completed Tank Farm, showing the shielding blocks.

b. Proposed Cooling System for Storage Tank. The heat released from the decay of fission products in the first cycle aqueous raffinate concentrate is expected to raise the temperature of this waste to the boiling point in the permanent storage tank. Because there is conflicting information concerning the corrosive effect of the concentrated aluminum nitrate in this waste on stainless steel at high temperatures, a system for cooling the metal surfaces of the storage tank has been designed but not installed. The expense of such an installation has made it desirable to await the results of corrosion tests before completing the cooling system, although enough piping has been installed to avoid large-scale excavation to complete it.

It is proposed to cool the tank bottom by a coil of 1-in. stainless steel pipe supported 9 in. above the bottom and covering the

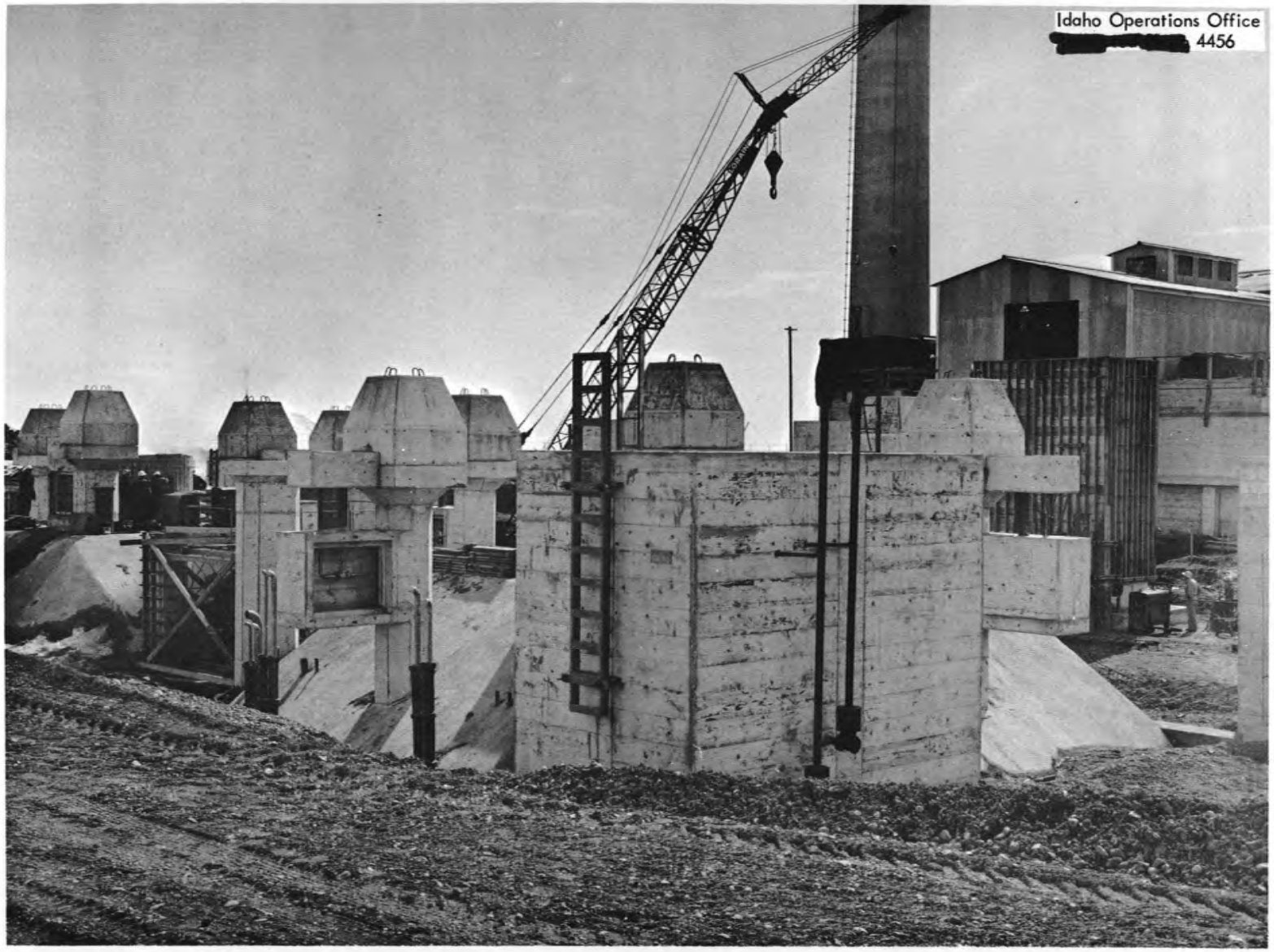

Fig. 16. ICPP: View of Tank Farm, Looking Southeast; Tank Farm 90% Complete, March 26, 1952.

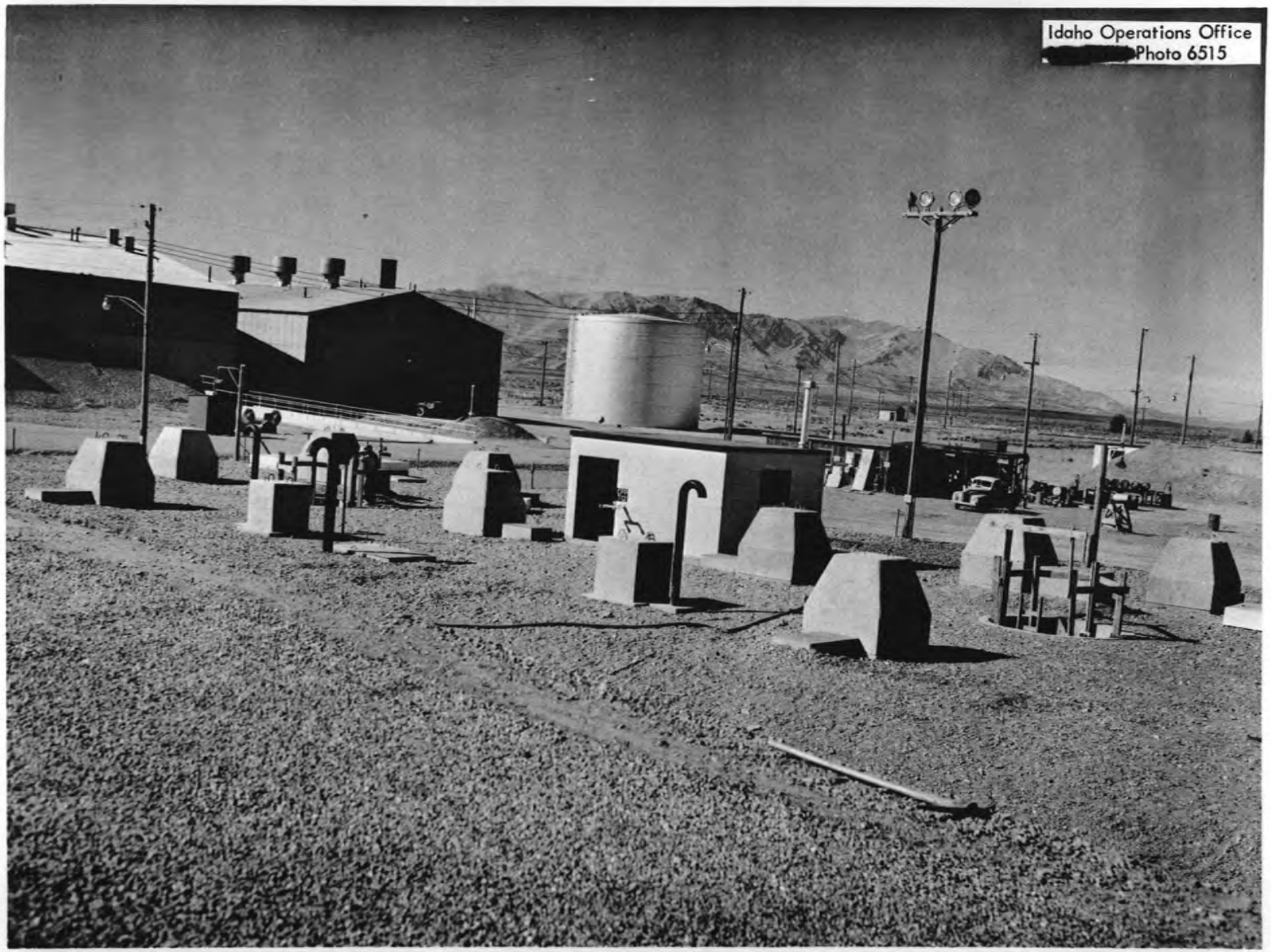

Fig. 17. ICPP: Tank Farm with Service and Laboratory Buildings in Background; Tank Farm 100% Complete, September 29, 1952.

entire bottom. The coil is to be built inside the tank in three sections in such a fashion that adequate cooling will be provided by any two sections even if the third fails and is shut off. Pipe to fabricate the coil can be brought into the tank through the 36-in. cupola on its roof and through a hatch, which has been left in the enclosure roof. (This is shown in Dwg. 542-41-P763, which is not reproduced here.) A 2-in. supply line and a 3-in. discharge line for each of the coils have already been installed from the nozzles on the north side of the tank to a point in the yard from which they can easily be extended into the proposed building (CPP 713; see Fig. 6, p. 15) to house heat exchangers for the cooling system. Two pumps and a head tank will be provided to recirculate the cooling water through the coils and through two heat exchangers. The recirculation arrangement will minimize the spread of activity in the event of leakage into the coil from the tank. The pumps and heat exchangers are so designed that one pump and one heat exchanger can carry the whole load of the system. An automatic water makeup device will be provided on the head tank. Temperature and pressure gauges throughout the system will indicate conditions. Flowsheet 542-41-P384 diagrams this system, and requisition 542-445L gives the design data for the proposed heat exchangers. (This reference material is not included in the report.).

The roof and side walls of the storage tank are to be cooled by cascading water over these surfaces from two weirs, one around the 36-in. cupola at the center of the roof and one around the edge of the roof. These weirs are to distribute the water evenly over all the surfaces to ensure even cooling. A sump in the concrete enclosure for the tank has been built to collect the cooling water. Two deep-well pumps will be installed in this sump through a shaft to ground level. These pumps, either of which can handle the entire load alone, will recirculate the cooling water through two heat exchangers. To prevent floating the tank or deflecting its bottom (the tank is anchored to the enclosure floor around the bottom rim), a level controller will be installed to prevent the water level in the enclosure from exceeding the liquid level inside the tank. A water makeup device to maintain a sufficient quantity of cooling water in the cascade system, thermocouples to indicate the temperatures of numerous points on the tank surfaces and in the cooling system, and pressure gauges will be provided.

A 3-in. stainless steel line has been installed from a point in the Tank Farm near the site of the future Heat Exchanger Building (CPP 713) to the surge tank of the waste evaporator. This line will allow the cooling water from the bottom coil and from the cascade

system to be transferred to the evaporator in the event this coolant becomes contaminated. It can be discharged to service waste if the systems require emptying when not radioactively contaminated. An arrangement to conserve treated water has been made whereby the water to cool the recirculated coolant can be further used to cool the reflux condensers for the storage tank. To avoid future excavation in the Tank Farm, treated water, high-pressure steam, low-pressure air, and a drain to service waste have been installed to serve the future Heat Exchanger Building.

c. Relief Valves (PVSV-1-WM and PVSV-2-WM). The storage tank is protected from excess vacuum and internal pressure by two 8-in. stainless steel Shand and Jurs relief valves (Req. 542-484B). The two valves are piped in parallel and are operated in unison to pass in either direction a maximum of 2000 ft^3 of air per minute at atmospheric pressure (12.2 psia) and 70°F. Each valve contains a pressure relief port, which is actuated by 5 in. of water pressure above atmospheric and is opened fully by 10 in. of water pressure. In addition, each valve contains a vacuum relief port, which is actuated by 0.5 ounce/$in.^2$ (0.87 in. of water) negative pressure below atmospheric and is opened fully by 2.5 in. negative pressure. The vacuum ports open to the atmosphere inside the concrete housings for the valves and receive air through the hooked risers seen in Fig. 17. The pressure ports discharge into a 12-in. carbon steel line to the stack.

The storage tank vents to the relief valves through a 12-in stainless steel line from one of the roof nozzles. This line is supported inside the concrete enclosure by means of counterweights to keep weight of the line from bearing on the tank roof as the tank expands with the rising temperature of the waste. The line is provided with expansion loops and passes through a sleeve in the enclosure roof to the concrete housing for the relief valves. It is suspended throughout its course so that it is free to expand and contract.

The housing for the relief valves is a large box buried near the tank enclosure. The housing is large enough for a man to stand inside to work on the valves. A covered entrance shaft with a ladder extends to ground level. A spray nozzle arrangement is provided similar to those on the storage tank access risers to knock down vapors and to clean the line for a man to work on the valves, as periodic inspection of the valves is necessary to make certain they do not stick. The discharge line from the pressure ports to the stack is supported underground in tile pipe and concrete boxes at bends to permit free expansion when the line fills with steam from the storage tank. This 12-in carbon steel line is painted inside with acid-resistant paint to facilitate decontamination.

d. Instrumentation. The storage tank is equipped with two sets of thermowells and two sets of dip tubes for liquid level recorder-alarms and density recorder-alarms. One set of five thermowells and one set of four dip tubes extend into the tank through the 12-in. northeast roof nozzle, and identical sets of thermowells and dip tubes are mounted through the 12-in. southwest roof nozzle. The latter dip tubes are spares to be used whenever the normal tubes become unusable. The spares are kept open by a bleed of instrument air.

Both sets of thermowells are connected to temperature indicator points on the 48-point Brown instrument in the Waste Disposal Building operating corridor. A schedule of these points appears in the Appendix, Sect. 10.5.3. The thermowells are so mounted in the two nozzles that temperature in the storage tank is measured at 5-ft intervals from the top to the bottom of the tank on opposite sides.

The level and density instruments operate from pneumatic transmitters located in the Instrument House (CPP 712) above ground between the two Tank Farm tanks (see Fig. 17). A pressure recorder-alarm (PRA) and a level indicator-alarm (LIA) for the concrete enclosure sump also operate from transmitters in this building. All these instruments record or indicate on instruments mounted on a panel board in the Waste Disposal Building. The electrical instruments (TI's only) are connected between the panel board and the Instrument House by wires run in "Sheraduct" conduit buried underground. The pneumatic transmitters connect to the panel board by 1/4-in. stainless steel tubes bundled together in an 8-in. carbon steel pipe buried underground.

e. Instrument House CPP 712. In addition to the instrument transmitters for the two underground storage tanks, the Tank Farm Instrument House contains convenience outlets for water, steam, and air as well as hose connections and control valves for the sump jets in the concrete enclosures for the two storage tanks. Steam is not connected directly to these jets in order to minimize danger of condensate leaking into the enclosures.

f. Reflux Condensers WM 300 and WM 301. The two reflux condensers serving the first cycle aqueous raffinate concentrate storage tank were installed to condense the vapors from the heated or boiling waste and to return the water to the tank in order to prevent further concentration and precipitation of the waste. The condensers receive the vapors in parallel from two 12-in. stainless steel lines, which connect to the cupola in the roof of the tank. These vapor lines have

expansion loops and are suspended from the enclosure roof by means of counterweights to prevent their weight from bearing on the tank as the tank expands. The lines, after passing through sleeves in the enclosure roof, are suspended in trenches to allow free expansion underground in their course to the condensers. The two condensers, either of which can carry the entire load of condensing vapors from a full tank of boiling waste, are supported in two concrete pits similar to that housing the reflux condenser for the collection tanks described on p. 30 . These condenser pits are also divided into two compartments, and loop seals for isolating the condensers from the tank are arranged in a manner similar to that for condenser WM 302. Fire water in addition to the normal treated water can be supplied to these condensers through the connection previously described. The water supply and the discharge from the condenser shells can be regulated by valves with extension handles to ground level.

Both storage tank condensers vent to the vessel off-gas system through 4-in. stainless steel lines supported underground in 6-in. tile pipes equipped with concrete boxes at bends to permit expansion of the vent lines. The two lines join a header anchored to force the expansion movement to occur in a long bend. This arrangement is necessary because the compact earth fill over the deeply buried lines exerts tremendous pressure and causes severe resistance to expansion of the pipes when heated vapors pass through them. The vent header also connects to the stack through a valve arrangement in the line from the relief valves of the storage tank. This arrangement provides for adequate venting of the condensers for the storage tank and collection tanks even if the vessel off-gas system is shut down.

Thermowells are provided in the outlet cooling water line, the off-gas line, and the drain for each condenser. These thermowells connect to the 48-point Brown temperature indicator in the Waste Disposal Building through the "Sheraduct" conduit buried underground.

Table 7 lists the design characteristics of condensers WM 300 and WM 301.

Table 7

Design Data for Reflux Condensers WM 300 and WM 301

Description	Vertical cylindrical shell-and-tube heat exchanger with internal baffles
Duty, each condenser	To condense 2070 lb of water per hour, entering at 200°F and leaving at 120°F; 2,200,000 Btu/hr at calculated U of 96.6 Btu/hr/ft^2/°F; LMDT = 81°F
Water, each condenser	98 gal/min, entering at 55°F and leaving at 100°F
Tubes, each condenser	170 tubes, 1 in. o.d. by 16 ft 0 in. long; No. 16 BWG; total heat transfer surface = 710 ft^2
Baffles, each condenser	10 segmental baffles, 18 in. apart
Shell and ends	Straight side height, 19 ft 0 in.; o.d., 20 in.; thickness, 3/8 in.; expansion section at center of shell, 30 in. o.d.
Materials of construction	All construction type 347 stainless steel
Design pressure	Shell, 95 psig; tubes, full vacuum
Operating pressure	Shell, 85 psig; tubes, atmospheric (12.2 psia)
Operating temperature	Shell, 100°F; tubes, 200°F
Fabricator	Foster Wheeler Corp., Dwg. H-33051
Construction data	No heat treatment; pickled and passivated; all welds radiographed (for testing and inspection procedure, see ORNL CF-50-10-137)
Purchase data	Vessel sketch FWV-42-H; Req. 542-445-E, F, and J; Bechtel P.O. 1699-OR-16A
Costs, each condenser	Materials $9,378 Fabrication 7,732 Total $17,110 (exclusive of piping and installation)

g. Reference Drawings. The following drawings give the details and the arrangement of the first cycle aqueous raffinate concentrate permanent storage tank and its auxiliaries:

Engineering flowsheets	542-41-P372
	542-41-P379
	542-41-P384
Piping drawings	542-41-P748
	542-41-P749
	542-41-P750
	542-41-P751
	542-41-P763
	542-41-P1245
Instrument drawings	542-41-C925
Concrete drawings	542-41-F552
	542-41-F1192
	542-41-F1237
	542-41-F742
	542-71-B206
	542-71-B207

4.0 SECOND AND THIRD CYCLE AQUEOUS RAFFINATE CONCENTRATE

4.1 Production Rate

Second and third cycle aqueous raffinate concentrate originates in Cell Y of the Process Building as the product of the second and third cycle raffinate evaporations. The concentrate is jetted to a special drain in the east wall of the cell from evaporator Y-140. This raffinate from NP, MTR, and EBR fuel processing is normally evaporated in 90-gal batches to an aluminum nitrate concentration of 2.200 M, yielding about 60 gal of concentrate per batch. This is transferred to the drain as soon as it has cooled to 50°C for easy jetting. Table 8 gives the production rate for second and third cycle aqueous raffinate concentrate for the various fuels based on the original design capacity of the ICPP (3.9 kg of uranium per 24 hr for NP fuel). Production of the raffinate concentrate for a 1.0 kg uranium rate for NP fuel is about the same as that for the higher rate, because the low uranium throughput is achieved mainly by dilution.

Table 8

Production of Second and Third Cycle Aqueous Raffinate Concentrate*

	NP	MTR	EBR	Total
No. of 60-gal batches per 24 hr	1	1	2	2 max.
Daily production (gal)	70	54	140	140 max.
Production days per year	240	25	10	275
Yearly production (gal)	17,000 +	1,350 +	1,400 =	19,750

* From ORNL CF-51-6-53; see also drawing EP-6910 and ORNL CF-50-8-146 for design estimates of waste production.

The following drawings give the details of the equipment for the evaporation of first and second cycle aqueous raffinate:

Engineering flowsheets	542-21-P1330 (Cell Y) 542-21-P1331 (Cell Y)
Piping drawings	542-11-P671 (Cell Y) 542-11-P673 (Cell Y)

4.2 Composition and Radioactivity

Second and third cycle aqueous raffinate concentrate is the second most radioactive waste handled in the ICPP, although it contains only 0.01% of the feed activity when the design decontamination factor of 10^4 is obtained in the first cycle extraction. The activity level and composition vary with the type fuel processed and with the fuel cooling time. Table 9 gives the design radioactivity level of the second and third cycle raffinate concentrate for NP and MTR fuels, which are the most radioactive handled in the ICPP.

Table 9

Radioactivity of Second and Third Cycle Aqueous Raffinate Concentrate

	NP (120-day cooling)	MTR (100-day cooling)
Activity in first extraction cycle feed for one day, design value* (curies)	1.18×10^5	6.3×10^5
Beta activity in second and third cycle raffinate concentrate when first cycle extraction decontamination factor is 10^4** (curies)	11.8	63.0
Beta activity in second and third cycle raffinate concentrate (c/m/ml)	1×10^7	5.8×10^7

* From Table II of IDO-26,058-ORNL. See Appendix, Sect.10.6.2, for calculations.

** Decontamination factor is from ORNL CF-51-6-53.

Early hot runs have yielded first cycle decontamination factors of 7×10^4, which reduces the activity of the second and third cycle raffinate concentrate to 1.4×10^6 beta counts per minute per milliliter for NP fuel and to 9.7×10^6 for MTR fuel.

Table 10 lists the chemical composition of the second and third cycle aqueous raffinate concentrate for the various fuels.

4.3 Collection and Storage

After concentration by evaporation in Cell Y, no further treatment is given the raffinate from the second and third extraction cycles. The concentrate is handled in a similar fashion to the first cycle concentrate but in its own system. The concentrate is jetted from its evaporator to collection tank WL 101 in the Waste Disposal Building. It flows by gravity from the Cell Y drain across the yard through a 3-in. stainless steel line supported in a tile pipe leak-detection system (described fully in Sect. 8.1). When the collection tank becomes full, the concentrate is transferred by jet to permanent storage tank WM 181 buried underground in the Tank Farm near storage tank WM 180 for first cycle aqueous raffinate concentrate.

Table 10

Composition of Second and Third Cycle Aqueous Raffinate Concentrate

Composition	NP	MTR	EBR
Density at 25°C	1.33	1.33	1.33
NH_4NO_3 (N)	0.014	0.18	0.08
$Fe(NH_2SO_4)_2$ (M)	0.035	0.05	0.04
NH_3 (M)	0.3	0.32	0.28
$Al(NO_3)_3$ (M)	2.2	2.19	2.15
MIBK (%)	0.01	0.01	0.01

4.4 Details of Waste Handling Equipment (See Fig. 18)

4.4.1 Collection Tank WL 101

The collection tank for second and third cycle aqueous raffinate concentrate is a horizontal cylindrical vessel with dished ends, located in the same cell with the P.E.W. evaporator surge tank in the north-east corner of the Waste Disposal Building. The tank serves as a receiver for the concentrate from the P.E.W. evaporator as well as for the second and third cycle concentrate. No cooling coils are provided for this tank and no reflux condenser, since the activity is not great enough to cause excessive heating. Flanged nozzles on the tank are equipped with teflon gaskets. The cell floor slopes to a sump equipped with a level indicator-alarm (LIA-1-WL) and a jet (WL 502) discharging to the permanent storage tank for this waste. This jet discharge line is not included in the leak-detection system.

Table 11 lists the design characteristics of tank WL 101.

DWG. 20376 [redacted]

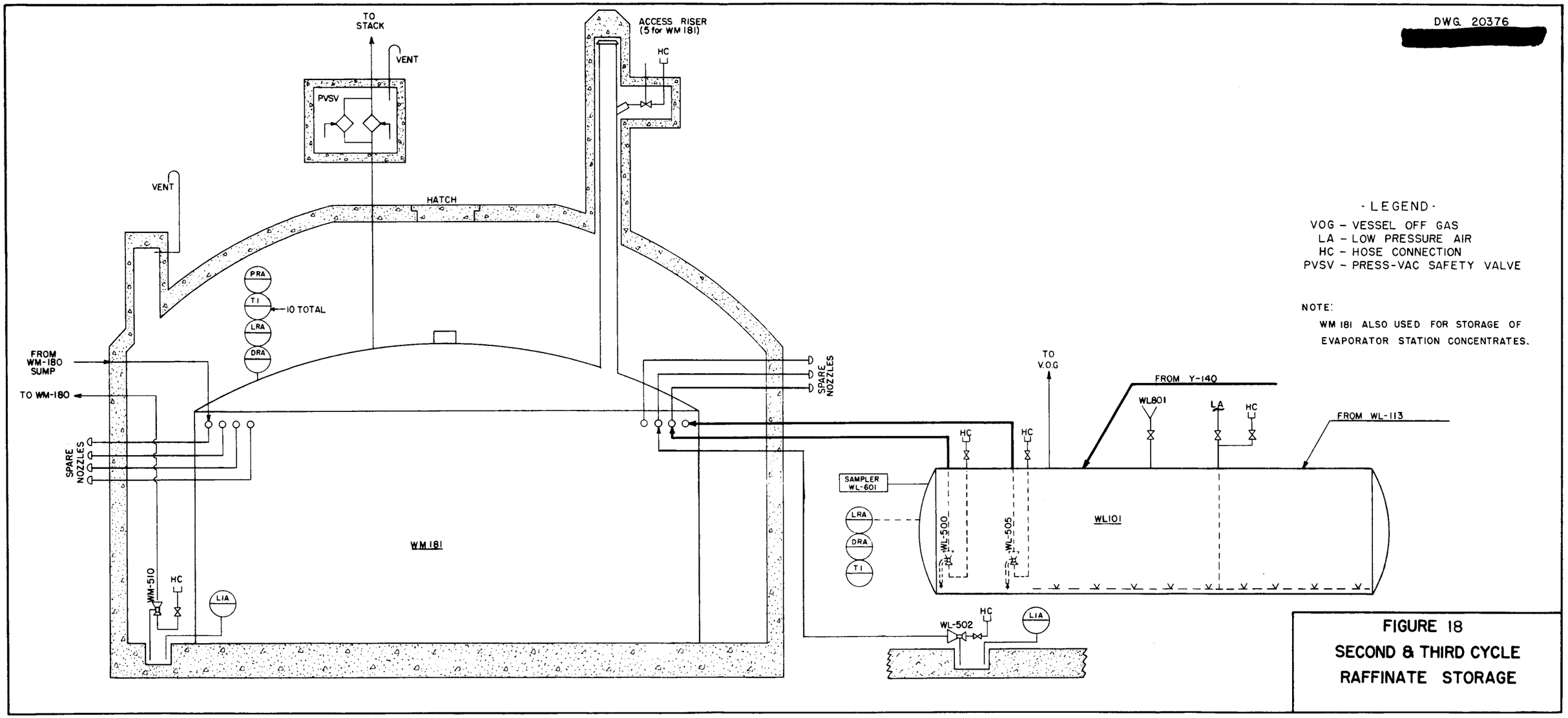

FIGURE 18
SECOND & THIRD CYCLE RAFFINATE STORAGE

Table 11

Design Data for Collection Tank WL 101

Description	Horizontal cylinder with dished ends
Capacity	18,400 gal
Dimensions	Straight side length, 30 ft 0 in.; o.d., 10 ft 0 in.
Materials of construction	Ends, type 347 stainless steel, 7/16 in. thick; shell, type 347 stainless steel, 5/16 in. thick; bolting, type 302 stainless steel
Design pressure	Atmospheric
Design temperature	200°F
Operating pressure	Atmospheric
Operating temperature	100°F
Fabricator	Foster Wheeler Corp., Dwg. H-33088 C
Construction data	No heat treatment; pickled and passivated; welds radiographed (for testing and inspection procedure, see ORNL CF-50-10-137)
Purchase data	Vessel sketch 542-12-V500E; Bechtel P.O. 1699-OR-10
Costs	Materials $15,026 Fabrication 13,318 Total $28,344 (exclusive of piping and installation)

a. Submerged Transfer Jets. Two submerged jets (see Table 37 in the Appendix) are provided in the bottom of the collection tank for transferring the waste to its permanent storage tank in the Tank Farm. The collection tank slopes toward these jets to ensure a minimum heel after transferring. The two 3-in. stainless steel discharge lines from these jets are supported in 6-in. tile pipe in a leak-detection system. The 1-in. steam supply line to each jet is encased in a 3-in. stainless steel line inside the tank to insulate it from the liquid in the tank. These steam supply lines originate in hose connections upstream from the jet control valves in the operating corridor without connecting directly to the steam header. The same single hose used for the jets and spargers of the first cycle collection tanks conducts steam from a convenience outlet to the hose connections for the tank WL 101 jets. This hose arrangement minimizes leakage of water into the tank.

b. Instruments. Conditions in the collection tank can be observed in the operating corridor by means of density recorder-alarm DRA-1-WL, level recorder-alarm LRA-1-WL, and temperature-indicator point TI-33-WL on the 48-point Brown instrument. The thermocouple for the TI extends to the bottom of the tank. A spare set of dip tubes with continuous air purge for the LRA and DRA is supplied in the tank. The air transmitters and air supply rotameters for these instruments are located in the sample corridor above the tank cell.

c. Off-Gas Connection. A 3-in. stainless steel line connects the collection tank to the vessel off-gas system. This line is not valved as are the off-gas connections for the first cycle waste collection tanks, because the second and third cycle waste is not expected to boil and does not have a reflux condenser.

d. Addition Funnel WL 801. The collection tank is equipped with an addition funnel for the introduction of decontamination agents and other fluids to the tank. The funnel and its valve are located at ground level above the tank cell.

e. Sampler WL 601. The tank has a sampler located in the sample corridor. Samplers are described fully in Sect. 8.2.

f. Sparger. For agitation, the collection tank is equipped with a sparger in two sections, each consisting of a 1-in. stainless steel pipe 10 ft long suspended 6 in. above the tank bottom and perforated by ten holes 5/32 in. in diameter. Low-pressure air is connected directly to the sparger through a valve in the operating corridor, and steam can be supplied through a hose connection similar to that for the transfer jets. Water for flushing the line and the tank can be introduced through the sparger hose connection.

g. Reference Drawings. The following drawings show the details and arrangement for collection tank WL 101:

Engineering flowsheets	542-41-P372 542-41-P1273
Piping drawings	542-41-P746 542-41-P750 542-41-P752 542-41-P753
Concrete drawings	542-41-F721 542-41-F729
Instrument drawings	542-41-C921 542-41-C922 542-41-C924 542-41-C968 542-41-C971

4.4.2 Permanent Storage Tank WM 181

The permanent storage tank for second and third cycle aqueous raffinate concentrate is an umbrella-roofed stainless steel tank 50 ft in diameter and 32 ft tall. The tank is very similar to the permanent storage tank for first cycle aqueous raffinate concentrate except it has no vapor lines and no reflux condensers. This tank is also housed in a concrete enclosure, whose roof is 8 ft underground to shield the surrounding area from the tank contents. This enclosure floor has a sump 2 ft square by 4 ft deep equipped with a level-indicator alarm (LIA-2-WM) and a jet discharging to the first cycle permanent storage tank. The LIA transmitter and the jet control valve are located in the Instrument House.

The storage tank is equipped with eight 12-in. nozzles and a 36-in. cupola in the roof, four 8-in. nozzles in the south side, and four 8-in. nozzles in the north side. The nozzles on the south side receive the transfer lines from the jets in the collection tank, the line from the collection tank sump jet, and the line from the sump jet in the first cycle storage tank enclosure. Three spare nozzles on the south side and four on the north side of the tank extend through the enclosure walls to points 8 ft beyond these walls for future connections.

Five of the roof nozzles are access risers to ground level equipped with sprays and quick-opening flanges, similar to those described in Sect. 3.4.2a for the first cycle storage tank. The tank has pressure-

vacuum relief valves identical to those for the first cycle and are housed in a similar concrete box. The pressure ports from these valves discharge into the line to the stack from the relief valves of the first cycle tank.

The second and third cycle storage tank is equipped with two sets of liquid level and density dip tubes and two sets of thermocouples for measuring the temperature at 5-ft intervals of depth from the top to the bottom of the tank. A schedule of the points on the 48-point Brown temperature recorder, which also serves this tank, appears in the Appendix, p. 185. The pneumatic transmitters for the density and level instruments are located in the Instrument House, which also contains a pressure recorder-alarm (PRA) for the tank. The lines to the panel board in the Waste Disposal Building operating corridor from all instruments for this tank are buried underground in the same fashion as those for the first cycle storage tank.

The following drawings show the details of the tank, its piping, and arrangement:

Engineering flowsheets	542-41-P379
Piping drawings	542-41-P748 542-41-P749 542-41-P750 542-41-P751 542-41-P1245 542-41-P1246
Instrument drawings	542-41-C925
Concrete drawings	542-41-F552 542-41-F1192 542-41-F1237

Table 6 for First Cycle Aqueous Raffinate Concentrate Tank, WM 180, lists design information for Tank WM 181 also.

5.0 PROCESS EQUIPMENT WASTE

5.1 Composition and Radioactivity

Process equipment waste (P.E.W.) is the third most radioactive waste from the ICPP process, being surpassed by the two raffinate concentrates. Despite the hazard they create, the fission products in solution, which cause the radioactivity, are a negligible weight percentage of the chemicals present. The main constituent is normally sodium hydroxide from the filter washes and the solvent recovery still. The compositions and volumes of the waste from laboratory hot sinks vary from time to time, causing indeterminate fluctuations in the P.E.W. composition. During periods of decontamination of process equipment, certain detergents, trisodium phosphate, sodium carbonate, nitric acid, and other decontaminating agents will comprise a major percentage of the P.E.W. chemical content. The radioactivity of the P.E.W. is expected to vary between 10^4 and 10^6 beta c/m/ml, depending on the fuel being processed, decontaminations, and dilution from laboratories.

5.2 Sources (See Fig. 19)

Drains for admitting waste to the P.E.W. system have been provided in all ICPP areas handling radioactive materials. These areas include the Laboratory Building, the Process Building, the Waste Disposal Building, and the Waste Tank Farm. The breakdown of these sources of P.E.W. in the following paragraphs gives the details of these drains and the reasons for providing them in certain areas.

5.2.1 P.E.W. Sources in the Laboratory Building CPP 602

All the P.E.W. drains in CPP 602 are hot sinks in hoods. These sinks are cup type drains in the hood trays, usually located at the end of the hood nearest the center of the building to minimize the run of hot drain pipe to the header. Hot sinks have no traps and are vented to the atmosphere outside the building through the header. Each hot sink is labeled to prevent confusing it with hood cold sinks, which are otherwise identical in appearance. The laboratory hot sinks serve to collect liquid waste not containing uranium but indicating activity above background. Use of the hot sinks for nonradioactive waste should be held to a minimum because of the expense of treating this waste in the P.E.W. system. Table 12 lists the 24 hot sinks provided in the hoods in CPP 602.

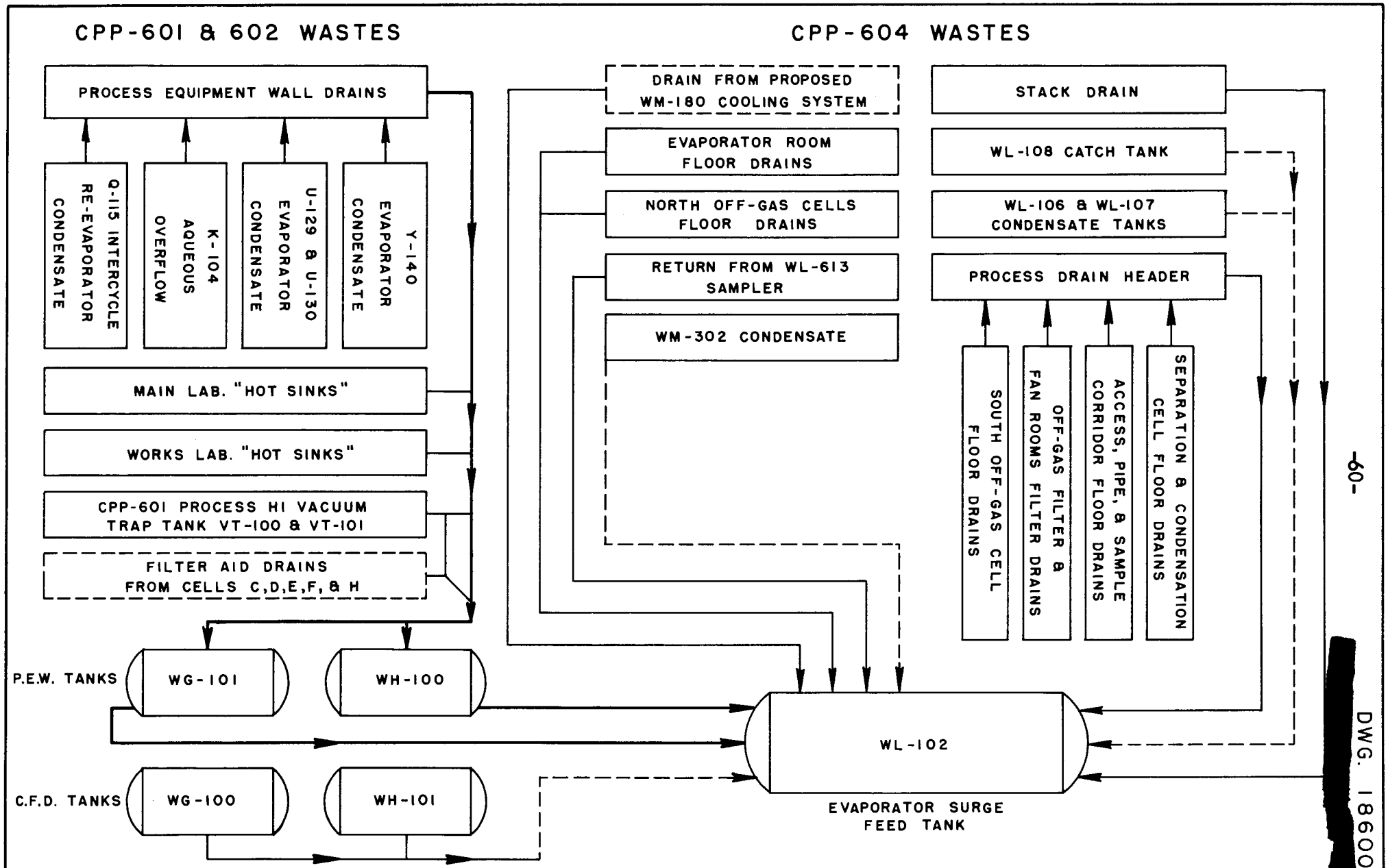

FIGURE 19
SOURCES OF PROCESS EQUIPMENT WASTE

Table 12

List of Laboratory Hot Sinks

Room	Rack No.	No. of Hot Sinks
Spectrochemical preparation room (LB 40)	14	1
Warm laboratory (LB 23)	24A	2
	24B	2
Cold laboratory (LB 20)	20B	1
	20A-1	1
Sample dilution room (LB 11)	21	2
Development laboratory (LB 12)	12	1
	11	2
	20A-2	1
Works laboratory (LC 21) (all hood sinks are hot sinks)	1 through 6	11

Drawings showing the locations and details of these hot sinks are:

Engineering flowsheet	542-21-P1355
Piping drawings	542-21-P701
	542-21-P704
	542-21-P705
	542-21-P706
	542-21-P707
	542-21-B414
	542-21-B417

5.2.2 P.E.W. Sources in the Process Building CPP 601

a. Cell Wall Drains. The main sources of P.E.W. in CPP 601 contribute to the system through the cell wall drains. All cell wall drains connect to the P.E.W. system except the special drains on the east walls of Cells U and Y, which connect the first cycle aqueous raffinate concentrate and the second and third cycle aqueous raffinate concentrate systems to their collection tanks. The P.E.W. wall drains are 2-in. stainless steel pipes projecting into the cells at a 45°

angle (Fig. 20). Each drain pipe extends into the cells 17 in., terminating in a blind flange which can be removed when cleaning the drain. A short vertical riser near the flanged end of each pipe receives waste lines from process vessels nearby. In all cells the waste inlet to each wall drain is 4 ft above the floor. This arrangement prevents gravity flow from vessels and requires that a deliberate jet transfer be made in order to get P.E.W. into the drains. No traps are provided in wall drain lines, which vent to the vessel off-gas system through the P.E.W. header.

The main contributors to the cell wall drains are:

1. The water phase from solvent recovery still K 104
2. Condensate from first cycle raffinate evaporators U 129 and U 130
3. Condensate from second and third cycle raffinate evaporator Y 140
4. Condensate from intercycle condensate re-evaporator Q 115.

Other process vessels connect to P.E.W. wall drains, but their main contributions occur during decontamination periods.

b. Vacuum Trap Tanks. The process high-vacuum system trap tanks VT 100 and VT 101 drain to the P.E.W. system through a line in the floor of their cell on the service corridor level.

c. Future Filter Aid Drains. Provisions have been made to connect future filter aid drains in Cells C, D, E, F, G, and H to the P.E.W. system by a 3-in. line, which has been installed and blanked off in the south end of the service corridor. The purpose of this arrangement is to prevent clogging the main P.E.W. gravity header with solid filter aid material by providing a separate jet-forced drain to handle the filter aid if it is ever used.

d. Cell Floor Drain System. The cell floor drain (C.F.D.) system can contribute to P.E.W. by means of pumps and a special line to the P.E.W. evaporator surge tank WL 102 in the Waste Disposal Building. Waste from the C.F.D. system is transferred to P.E.W. only when it is radioactive.

e. References. Drawings showing the details and arrangement of cell wall drains and the other sources of P.E.W. in the Process Building are:

Engineering flowsheets	542-21-P1355
	542-21-P1356

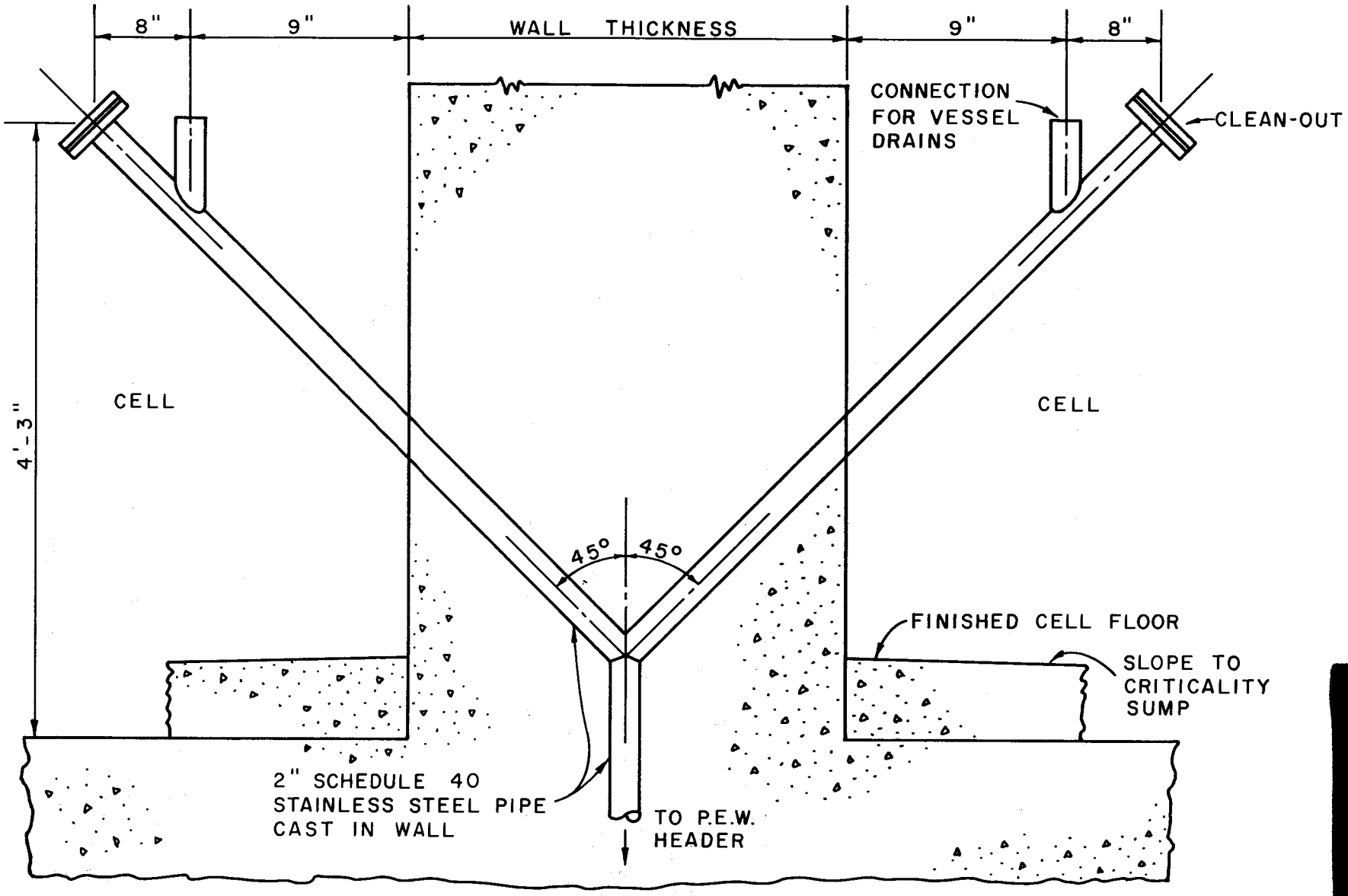

FIG. 20
TYPICAL CELL WALL DRAIN

DWG. 20057

Piping drawings	542-11-P131 542-11-P132 542-11-P135

5.2.3 Sources of P.E.W. in the Waste Disposal Building CPP 604

All P.E.W. drains in CPP 604 are floor drains located in the hot cells, the pipe corridor, the access corridor, and the sample corridor. These drains serve the following sources of P.E.W.:

1. Vacuum system trap tank WL 100
2. Vessel off-gas header and filter WL 114
3. Vessel off-gas blowers WL 209 and WL 209A
4. Dissolver off-gas vessels WL 116, WN 100, WN 101, WN 110, and WN 125
5. P.E.W. evaporator vessels WL 106, WL 107, WL 108, and WL 113.

The floor drains connect to the P.E.W. evaporator surge tank WL 102 through two 3-in. stainless steel headers, which are vented to the cell ventilation duct to carry away fumes. One header serves the evaporator cell plus the hottest off-gas cell, while the other serves the colder areas. This arrangement prevents contamination of colder areas by air movement through the trapless drains. The headers extend to the bottom of the surge tanks, where bucket seals prevent leakage of excess air into the tank and thus into the vessel off-gas system.

The following drawings show the details of the P.E.W. sources in CPP 604:

Engineering flowsheets	542-31-P1273 542-41-P781 542-41-P371 542-41-P372
Piping drawings	542-41-P760 542-41-P762 542-41-P764

5.2.4 Sources of P.E.W. in the Waste Tank Farm and Stack Area

a. Storage Tank WM 180 Future Cooling System. Provision has been made to drain the future cooling system for tank WM 180 to the P.E.W. evaporator surge tank WL 102 by means of a 3-in. line, which has been installed from a point in the Tank Farm to WL 102 (see Sect. 3.4.2). The cooling water in the WM 180 system will be drained to WL 102 only if it becomes contaminated.

b. Stack. The main exhaust stack CPP 708 has a drain to surge tank WL 102. The drain line extends to the bottom of the tank to prevent excess air leakage into the tank and thus into the vessel off-gas system.

c. Reflux Condenser WM 302. Condenser WM 302 can drain the condensed vapors from the first cycle aqueous raffinate concentrate in collection tanks WM 100, WM 101, and WM 102 to surge tank WL 102 when it is desired to allow concentration of the raffinate waste to occur or when the condenser is being decontaminated (see Sect. 3.4.1 i).

d. References. The following drawings show the arrangement and details of the sources of P.E.W. in the Waste Tank Farm and Stack areas:

Engineering flowsheets	542-41-P384
	542-41-P372
Piping drawings	542-41-P748
	542-41-P750
	542-41-P752
	542-41-P241
Rust Engineering Co. Dwg.	C-6336-F-1

5.3 Production Rate

Because P.E.W. has several sources producing large but indeterminate volumes of waste in addition to the waste resulting from normal process operations, it is possible to make only a rough estimate of the total production rate. The values used in designing the equipment for handling P.E.W. included generous allowances for waste from cell and equipment decontaminations, from RaLa operations, laboratory contributions, and from cleaning the stack. Table 13 lists these design values.

Although the total estimate is probably high because the stack washing waste is not now expected to occur, it is debatable whether the estimate for decontamination is high or low. The estimate for laboratory contributions is lower by 300,000 gal/year than the value used by Knolls Atomic Power Laboratory. The accuracy of the RaLa waste rate is unknown. It was felt that an overdesign of P.E.W. equipment was desirable, since an underdesign would result in a delay in normal processing while the waste system treated large volumes of decontamination or other abnormal waste.

Table 13

Design Estimates of Process Equipment Waste Production Rate*

Waste	Production Rate (gal/year)
Laboratory hot waste (estimated at 1000 gal/week)	50,000
Solvent recovery waste (based on assumption that aqueous waste equals 40% of solvent in daily use)	175,000
Waste from normal process operation	190,000
Waste from washing stack (estimated at 5000 gal/week)	250,000
RaLa waste (estimated at 4000 gal/week)	200,000
Decontamination waste (based on 10 times the total volume of all process vessels once per year)	200,000
Total P.E.W. production, estimated	1,065,000

* From ORNL CF-50-8-146.

Table 14 lists the P.E.W. production rate from normal process operations for NP and MTR fuels based on 242 operating days per year for NP and 25 days per year for MTR. The waste resulting from EBR fuel processing is negligible compared to that from these other fuels.

5.4 Process Description

From the laboratory hot sinks and the Process Building wall drains, P.E.W. flows by gravity through a stainless steel header in the pipe trench to two stainless steel collection tanks (WG 101 and WH 100; Fig. 3) located in separate cells at the extreme south end of the Process Building. This P.E.W. header terminates in a diversion box (WG 120), which permits the waste to flow to one collection tank while the other tank is isolated for sampling. Both tanks are equipped with liquid-level, density, and temperature instruments and with agitators to assure representative sampling.

[redacted]

Table 14

Production of P.E.W. from Normal Processing of NP and MTR fuels

Process Step	NP (gal/day)	NP (gal/year)	MTR (gal/day)	MTR (gal/year)
Coarse feed adjustment*	117	28,400	95	2,380
Pre-extraction filtration	144	34,500	127	3,050
Fine feed adjustment*	49	11,200	18	425
First cycle raffinate evaporator	195	47,200	350	8,750
Second and third cycle raffinate evaporator	40	9,600	30	750
Intercycle re-evaporation	150	36,000	250	6,250
Total	695	167,400	870	21,605
Grand total		189,000 gal/year		

* Most of this waste is recirculated in the process to minimize uranium losses.

The P.E.W. is transferred from the collection tanks by pumps WC 200 and WD 200 through two 3-in. stainless steel lines to evaporator surge tank WL 102 in the Waste Disposal Building. An individual pump and transfer line for each collection tank has been provided to avoid the use of valves in this hot system. The evaporator surge tank affords holdup capacity and ensures an adequate supply of feed for several days' operation of the evaporator, which serves to reduce the volume of the radioactive waste. The water boiled off in this concentration process is normally sent to service waste. The concentrated P.E.W. is stored in tank WM 181, the permanent storage tank for second and third cycle aqueous raffinate concentrate in the Waste Tank Farm. Figure 21 is a schematic diagram of the P.E.W. disposal system.

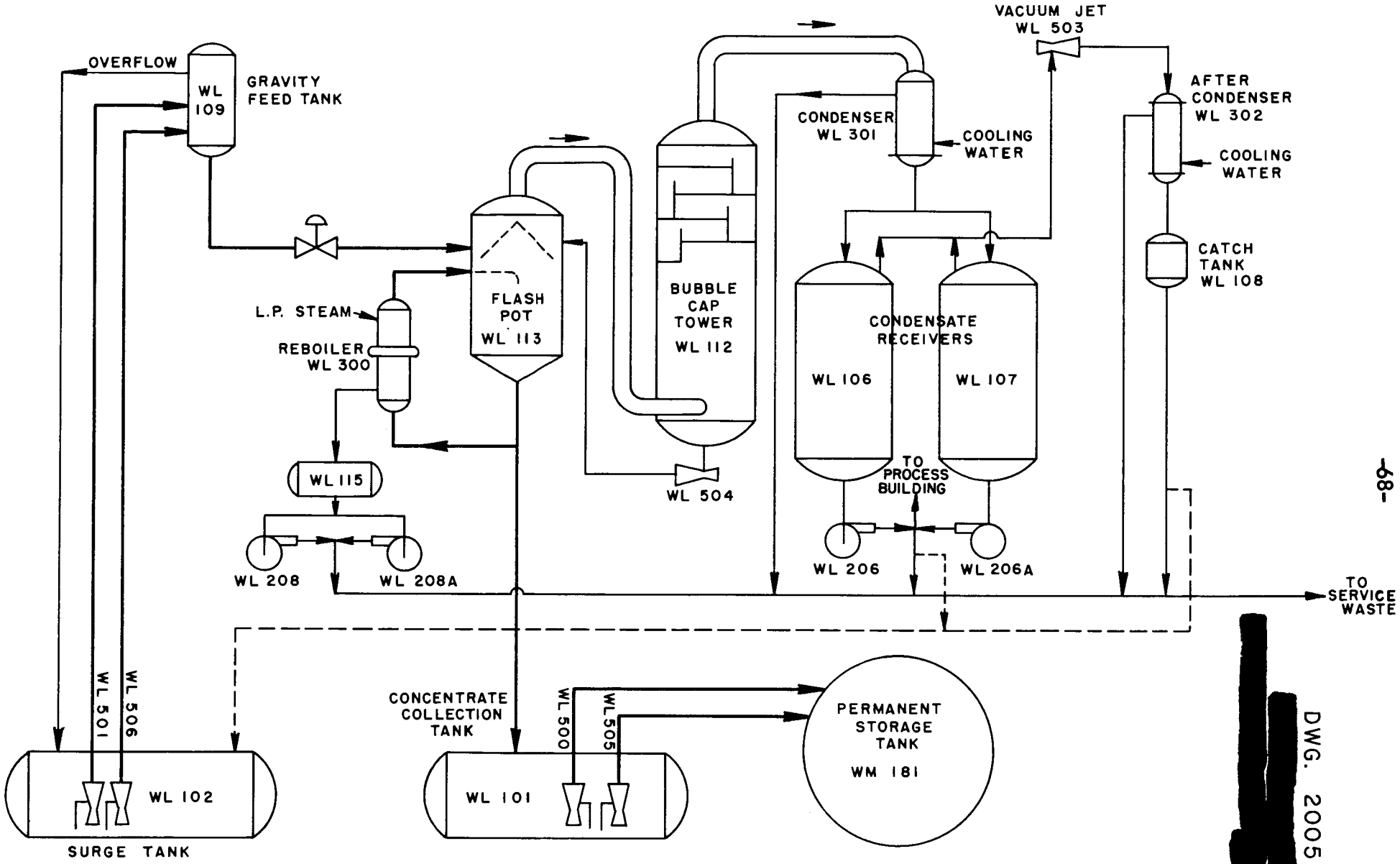

FIG. 21
PROCESS EQUIPMENT WASTE DISPOSAL

[redacted]

DWG. 20058

The surge tank jets supply a small gravity feed tank (WL 109) which overflows back to the surge tank. This arrangement of feeding the evaporator compensates for the fact that jets have fixed capacities and do not lend themselves to close flow regulation. The feed then flows to a flash pot (WL 113), which is heated by an external thermosyphon reboiler (WL 300) supported beside it. The liquid level in the flash pot is regulated automatically by a control valve in the feed line. The evaporation rate is controlled by regulating the steam flow to the reboiler, which is a shell-and-tube heat exchanger with the waste flowing through the tubes. Low-pressure steam enters the top of the shell surrounding the tubes, condensing as it flows downward. The condensate is collected in a small tank (WL 115) and pumped to service waste. The tank is necessary in place of a trap because the steam condenses at below atmospheric pressure when the evaporator operates under a high vacuum.

The waste circulates between the reboiler and the flash tank by natural convection owing to the arrangement of the heater in relation to the flash pot. This type heater was used to avoid a recirculating pump and to permit cleaning of the tubes without entering the flash pot. An addition funnel at ground level on top of the evaporator cell permits the introduction of decontaminating and descaling agents to the reboiler tubes. On re-entering the flash pot from the tubes, part of the waste flashes into vapor and rises past a baffle to enter the 18-in.-diameter vapor line leading to a bubble cap de-entraining tower (WL 112) in an adjacent cell. The vapors enter the tower tangentially at the bottom and swirl through about 10 ft of vertical free space before passing through four bubble cap trays in the top of the tower. The vapors are condensed in a vertical downdraft condenser (WL 301) and the condensate is collected in two 5000-gal receivers (WL 106 and WL 107). A steam jet air ejector (WL 503), which discharges into an after-condenser and a collection pot, can hold the entire evaporator system at about 23 in. Hg vacuum with the evaporator operating at full capacity. Two pumps (WL 206 and WL 206A) discharge the condensate from the evaporation to service waste after it has been sampled for radioactivity. A small steam jet (WL 504) under the bubble cap tower returns condensate and reflux water to the flash pot.

A continuous record of the radioactivity in the water boiled off the P.E.W. by evaporation is maintained by a condensate monitor in the Waste Disposal Building operating corridor. When the condensate radioactivity is too high, the water collected in the receivers and in catch tank WL 108 can be returned to the surge tank for re-evaporation. When the evaporator operates satisfactorily, the condensate is essentially distilled water. A 1-1/2-in. stainless steel line from pumps

WL 206 and WL 206A can deliver this water to the Process Building makeup area.

The concentrated waste in the flash pot is dumped to collection tank WL 101 when its density reaches 1.3 to 1.4 g/ml. The exact density point varies with the composition of the waste, as it is not desirable to concentrate beyond the saturation point of the solids dissolved in the waste. Submerged transfer jets in the collection tank discharge the concentrated P.E.W. to permanent storage tank WL 101 in the Waste Tank Farm through two underground stainless steel lines. The concentration factor in the evaporator is estimated to be about 30 to 1, which affords about 6 months' storage capacity for the P.E.W. concentrate in the collection tank and about 10 years' capacity in the permanent storage tank. However, both these tanks are also used for second and third cycle aqueous raffinate concentrate, which accumulates at the rate of 19,750 gal/year. The irregularity of accumulation of the P.E.W. concentrate, which results from the uncertainty of decontamination and other abnormal wastes, makes it difficult to estimate the time capacity of the storage tanks.

5.5 Details of Waste Handling Equipment (Fig. 22)

5.5.1 P.E.W. Header in the Laboratory and Process Buildings

The hot sinks in hoods on the first floor of the Laboratory Building drain through 2-in. lines sloping toward pipe chases along the center of the building. In these pipe chases the hood drains connect to 3-in. vertical pipes, which drop unshielded through the basement to the 3-in. P.E.W. header in a trench below the basement floor. Hot sinks in the basement works laboratory hoods drain to the header through a 2-in. subheader buried under the floor. All these stainless steel pipes are oversized, since the flows they carry are small, because it is desirable to encourage fast, unimpeded drainage of the hot waste.

The header is vented to the atmosphere by means of a 3-in. breather pipe extending through the Laboratory Building roof at its north end. The original design vented the header to the vessel off-gas system, allowing air from the breather and from the trapless drains to flow the length of the header to the P.E.W. collection tanks in the south end of the Process Building. A trap later had to be installed in the header to isolate these open drains from the closed hot drains from vessels in the Process Building cells, because the large air flow interfered with drainage from these vessels. As it now stands, the header vents both to the atmosphere through the breather and to the hoods. Although air from the drains can enter the hoods, this air is prevented from

DWG. 20059 [redacted]

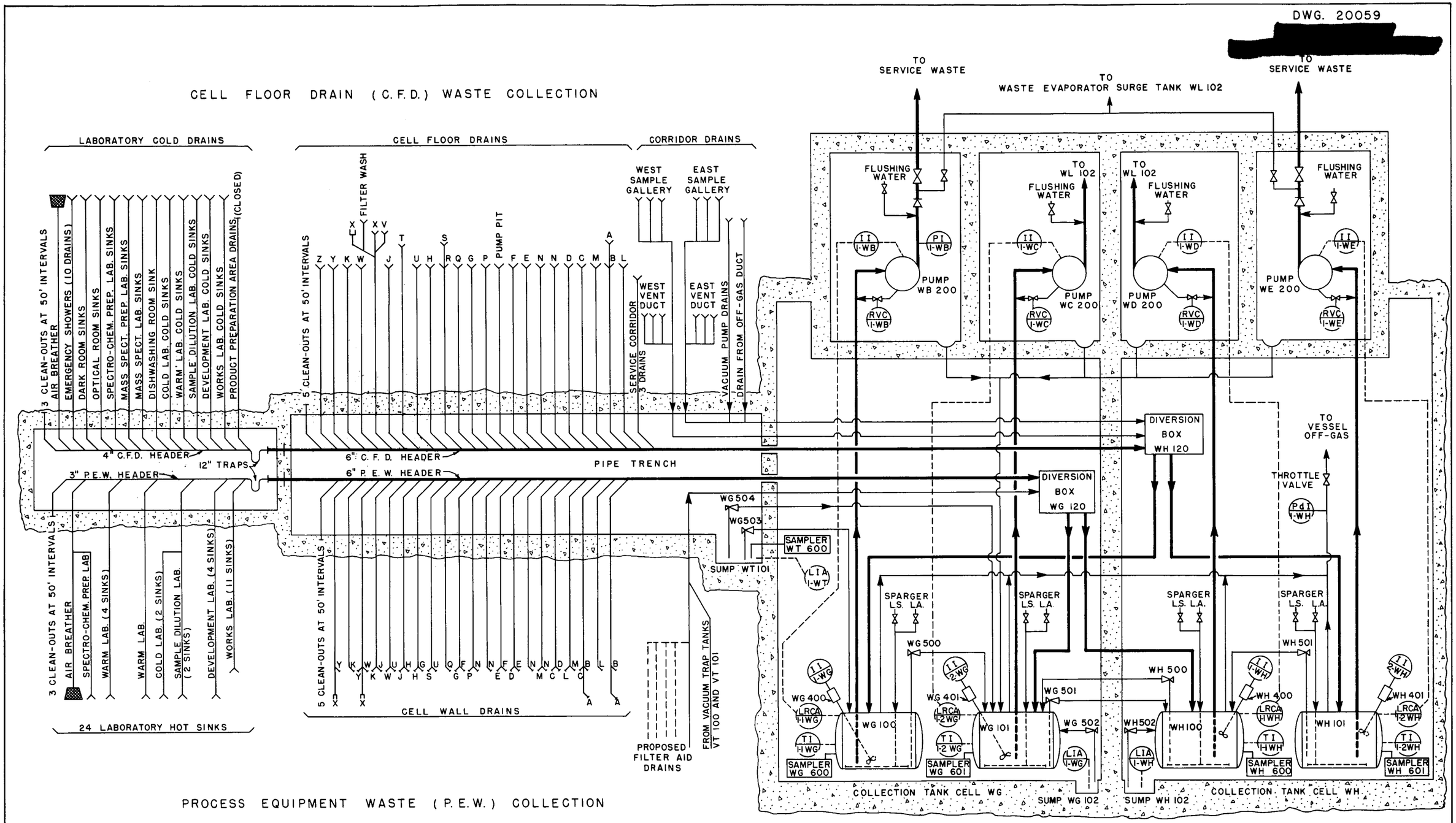

LEGEND

L.A. LOW PRESSURE AIR
L.S. LOW PRESSURE STEAM
WALL DRAIN
SINK OR FLOOR DRAIN

REFERENCE FLOWSHEETS

WG-WH AREA	542-21-P1356F
PIPE TRENCH AREA	542-21-P1355H

FIGURE 22
PROCESS EQUIPMENT WASTE AND CELL FLOOR DRAIN WASTE COLLECTION

passing into the laboratory work areas by the slight positive pressure maintained in the laboratories. Normally there is little air movement through the drains because of the small air pressure differential between the hoods and the drains.

Three flanged clean-outs are provided in the header under the Laboratory Building. These are accessible through hatches into the trench in the basement floor. The header slopes southward and drops 16 ft at the south end of the Laboratory Building to pass through a concrete wall into the pipe trench under the Process Building (see Sect. 2.2). The trap has been placed in the vertical drop. The header is anchored in the wall between the Process and Laboratory Buildings and is free to expand in either direction from the wall when heated by decontaminating steam. Under the Process Building the header is 6-in. stainless steel pipe equipped with five flanged clean-outs extending through the pipe trench ceiling into recesses in the access corridor floor. The cell wall drains, which are all 2-in. pipes, join this header in the pipe trench. The header slopes 1/4 in. per foot of length, dropping a total of 4 ft 9 in. under the Process Building. The trench floor slopes toward the south end, terminating in a small sump. The sump is equipped with a level indicator-alarm (LIA-1-WT), a sampler (WT 600), and two transfer jets (WG 503 and WG 504; see Table 37 in the Appendix) discharging to the C.F.D. and P.E.W. collection tanks, respectively.

The header passes through a sleeve in the south wall of the trench into collection tank cell WG and terminates in diversion box WG 120. The header is fastened to the diversion box through a stainless steel bellows to permit expansion without air leakage into the system. The diversion box, which is suspended from the cell ceiling, provides the means to direct the P.E.W. flow to tank WG 101 or to tank WH 100 by a movable transfer box inside. This transfer box is operated by a handle extending through the WG cell ceiling into the control room above. A pointer on the handle in the control room indicates the tank receiving the flow. Two 6-in. stainless steel lines conduct the waste from the diversion box to the tanks. Details of the diversion box are given on drawing no. 542-11-P136, which is not reproduced here.

5.5.2 Collection Tanks WG 101 and WH 100

The P.E.W. collection tanks are identical with the C.F.D. collection tanks and are housed in the same area in the Process Building. Table 15 lists the design characteristics of all four collection tanks.

Table 15

Design Data for P.E.W. and C.F.D. Collection Tanks WG 100, WG 101, WH 100, and WH 101

Capacity, each tank	4632 gal
Dimensions	Straight side length, 8 ft 6 in.; o.d., 9 ft 0 in.
Materials of construction	Ends, type 347 stainless steel, 5/16 in. thick; shell, type 347 stainless steel, 1/4 in. thick; internals, type 347 stainless steel; bolting, type 302 stainless steel; gaskets, teflon
Design pressure	Atmospheric
Design temperature	300°F
Operating pressure	Atmospheric
Operating temperature	200°F
Fabricator	Alloy Fabricators, Perth Amboy, N.J.; Dwg. Nos. A1257-A-1 and A1257-A-2
Construction data	No stress relieving required; welds radiographed; pickled and passivated; stainless steel finish, hot rolled and pickled; tanks tested at 25 psig (for testing and inspection procedure see ORNL CF-50-10-139)
Purchase data	Vessel sketch FWV 4H and SKOR V124, Bechtel P.O. 1699-OR-10A
Costs for four tanks	Materials $20,736 Fabrication 12,608 Total $33,344 (exclusive of piping and installation)

[redacted]

a. Arrangement of Collection Tanks. The arrangement of the collection tanks has been described in Sect. 2.2. Figure 3, p. 9, shows the actual arrangement, while Fig. 22, p. 71, shows the arrangement diagrammatically, with the relation of the tanks to the collection headers.

b. Transfer Jets. Each P.E.W. tank has a jet (Schutte and Koerting Fig. 217, 1 in.) discharging to the other P.E.W. tank. Each C.F.D. tank has a similar jet discharging to the P.E.W. tank in its cell. The floor sump in each tank cell has a jet (Schutte and Koerting Fig. 217, 3/4 in.) discharging to the P.E.W. tank in that cell. This arrangement of jets permits liquid transfers from normally cold tanks to hot tanks but does not permit transfers from hot tanks to cold tanks. The valves in the high-pressure steam supply lines to these jets are located in the control rooms above the two tank cells. The jets are listed with their code numbers and uses in the Appendix, Sect. 10.4, Table 37.

c. Instruments. Each collection tank is provided with a liquid-level recorder-controller-alarm (LRCA), whose indicating and recording parts are mounted on panel board H in Control Room WA. The LRCA's are set to sound alarms in the Process Building operating corridor and in the control room when each tank becomes 80% full. When a tank becomes 90% full, its LRCA automatically starts the pump unless the switches have been set to prevent this. This arrangement is designed to allow time to isolate a tank for sampling by diverting the P.E.W. flow to the other tank and also to prevent overflowing a tank by careless operation. The control settings for the alarm and the pump starting can be adjusted to suit the timing required for changing tanks.

The floor sump in each collection tank cell is equipped with a liquid-level indicator-alarm (LIA-1-WG and LIA-1-WH), which shows by a light and an alarm on panel board H when liquid accumulates in either sump. These are conductivity-probe type instruments.

A Dwyer draft gauge (PdI-1-WH) has been provided on the vessel off-gas header serving all four collection tanks to record the pressure differential between the control rooms and the off-gas header. In addition, two differential pressure gauges (PdI-L-WG and PdI-2-WH) on the panel board show the pressure difference between the control rooms and the tank cells.

Each collection tank is equipped with a temperature indicator (TI) composed of a thermowell extending into the tank to the bottom and a point on a 6-point indicator on the panel board. Figure 23 is a view of Panel Board H for the waste collection area. A list of all the instruments for the collection tank cells and for the pipe trench is found in the Appendix, Sect. 10.5.

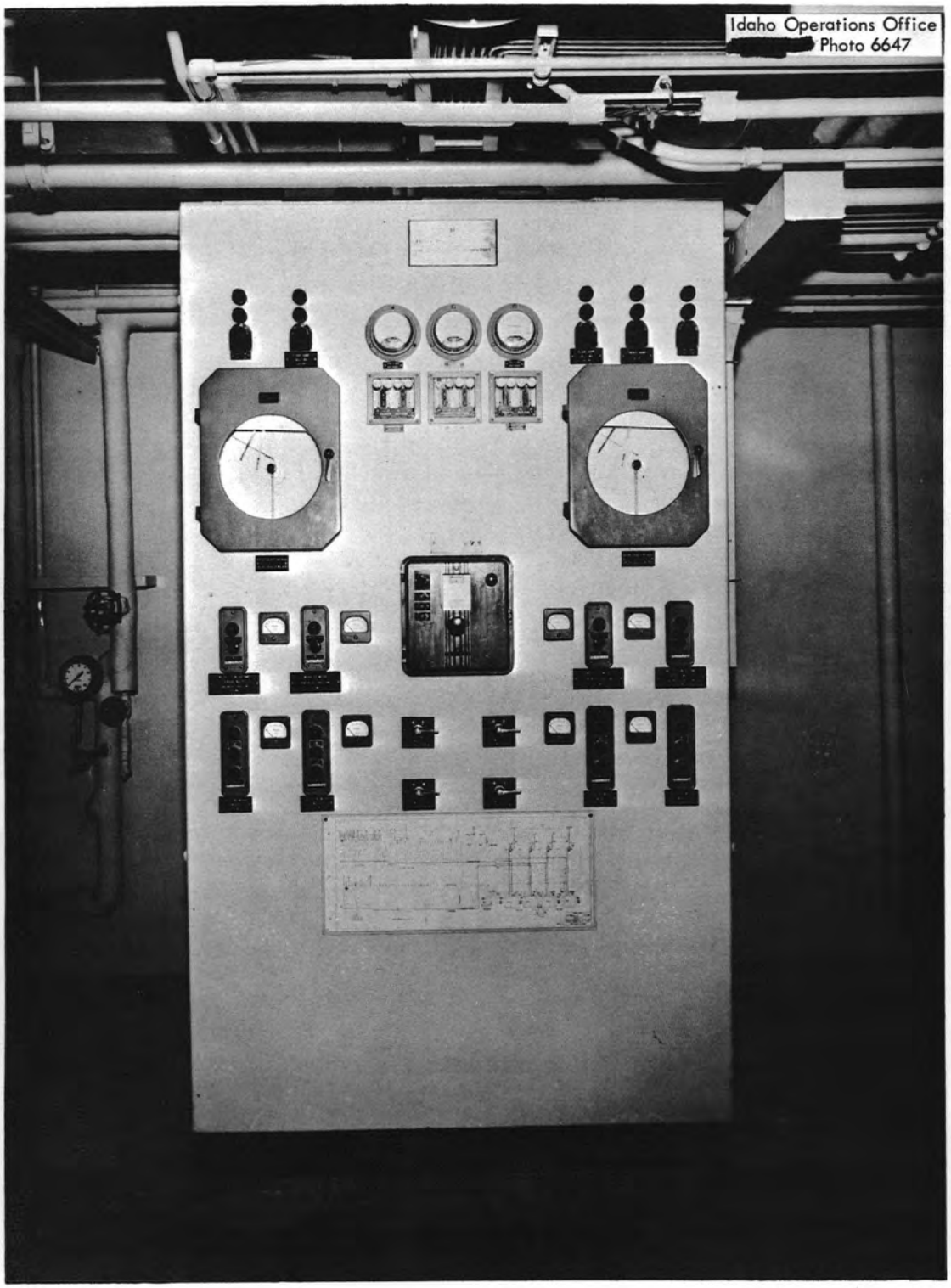

Fig. 23. Panel Board H, Waste Collection Area WG and WH, October 10, 1952.

d. Off-Gas Connections. The collection tanks are vented to the vessel off-gas system through a 3-in. stainless steel header and valve for throttling the flow of air. The valve handle extends through the floor of the control room. The header should operate under a slight negative pressure to ensure flow of fumes from the tanks to the off-gas system.

e. Spargers and Agitators. Each collection tank is equipped with a sparger and with a motor-driven agitator. The spargers are 1-in. stainless steel pipes 17 ft 6 in. long containing sixteen 3/32-in.-diameter holes and one 1/8-in.-diameter weep hole. Low-pressure (50 psig) air or steam can be supplied to the spargers for agitation or steam cleaning the tanks. The holes will pass about 105 scfm of air at 50 psig, which is adequate to agitate the tank (see sparger calculations in the Appendix, p.198.

The motor-driven agitators are mounted on the tanks through 10-in. flanged nozzles. They require no lubrication, as they are equipped with graphite-impregnated teflon packing around the shaft supports. Current indicators (II's) are provided beside the agitator switches on the panel board to indicate when each motor is operating. Table 16 gives the design data for the agitators for all four collection tanks.

Table 16

Design Data for Agitators WG 400, WG 401, WH 400, and WH 401

Description	"Lightnin" Mixer, Model 33-200, flange mounted, propeller type, 1-1/4 in. shaft diameter, 76 in. long; lubricant trap and type B flange construction (Catalog No. B-78 of vendor); three-bladed propeller 7-1/2 in. diameter
Material	Shaft, propeller, and flange facing type 304 stainless steel;packing, graphite-impregnated teflon
Motor	Louis Allis, Type EX,class 2,Group D explosion resistant; 1124 rpm, direct drive; 2 hp, 220/440 volts, 3 phase, 60 cycle, 62/3.1 amp, frame 225 B
Purchase data	Requisition ORNL-D9-80, Bechtel P.O. 1699-OR-138, Mixing Equipment Co., Inc., manufacturer and vendor, Dwgs. 604919 A, B, C, and D; ORNL sketch SK-542-131
Cost	$2940 for four agitators

f. Samplers WG 601 and WH 600. Each collection tank is provided with a sampler. The WG cell samplers are housed in sample gallery 13 in control room WA, the WH cell samplers in sample gallery 12 in control room WF. The samplers are described in detail in Sect. 8.2.

g. Pumps WC 200 and WD 200. (Pumps WB 200 and WE 200 are identical). Each P.E.W. collection tank has its own pump and 3-in. stainless steel discharge line to the evaporator surge tank WL 102. Pump WC 200 empties tank WG 101, and pump WD 200 empties tank WH 100. The pump discharge lines are encased in a tile pipe leak-detection system which is described in Sect. 8.1. The pumps are designed without packing, are self-priming, and are easily decontaminable. Each pump is mounted in its own cell to isolate it from the tank cells and the control rooms. The pump cells (WB, WC, WD, and WE) are lined with stainless steel near the pumps and are provided with drains to collection tank WG 101. The pumps can be flushed with water by means of 1/2-in. lines to the pump discharge lines. The flushing lines are not connected directly to the water supply to avoid leakage into the system, as liquid in the pumps drains to the P.E.W. collection tanks. The drain in each pump casing is equipped with a remotely operated valve (RVC) controlled from an air switch on the panel board, permitting the pumps to be flushed and drained without entry into the pump cells. The valves are normally closed to maintain priming liquid in the pump casings. Switches and current indicators (II's) for the pumps are also mounted on the panel board, while pressure gauges for the pumps are mounted on the control room side of the pump cells. Diaphragms in the pressure gauge lines prevent the entry of hot waste into the control rooms.

Table 17 gives the design data for the four pumps in the collection area of the Process Building.

Table 17

Design Data for C.F.D. and P.E.W. Pumps WB 200, WC 200, WD 200, and WE 200

Description	LaBour pumps, type 10 BG, vertical, centrifugal, self-priming, packingless (dynamic seal)
Capacity	75 gal per minute of dilute nitric acid, sp. gr. 1.0, 60°F against 61 ft total dynamic head, including 14-1/2 ft static suction lift; curve 1004-G on purchase order indicates approximate performance
Material	All wetted parts LaBour R-55 Alloy (impeller 5AA-MA-5")
Motor	5 hp, 3450 rpm, 3 phase, 60 cycle, 440 volt, Louis Allis vertical, face mounting, totally enclosed, type JX, fan cooled
Purchase data	Manufacturer, LaBour Co., Inc.,Elkhart, Indiana; Vendor, Wm. K. Sims, Newark, N.J.; Purchase Req. 542-170-B-C1, Bechtel P.O. 1699-OR-542-170B
Costs	Pumps $1,151.46 each Motors $ 184.00 each Total for four pumps and motors, $5,341.84 f.o.b. Elkhart, Ind.

h. Reference Drawings. The following drawings give the details of the piping and concrete and of arrangement of the P.E.W. and C.F.D. collection system in the Laboratory and Process Buildings.

Engineering flowsheets	542-21-P1355 542-21-P1356 542-31-P1273 542-11-P47 542-11-P48

Piping drawings	542-11-P131
	542-11-P132
	542-11-P133
	542-11-P134
	542-11-P135
	542-11-P136
	542-11-P144
	542-21-P701
	542-21-P711
Concrete drawings	542-21-F80
	542-21-F81
	542-21-F364
	542-11-F52
	542-11-F55
	542-11-F56
	542-11-F57
	542-11-F58
	542-11-F305
	542-11-F308
	542-11-F319
Instrument drawings	542-11-C910
	542-11-C942
	542-24-C1737
Electrical drawings	542-61-E195
	542-11-E120
	542-11-E124
	542-61-E412

5.5.3 P.E.W. Evaporator Equipment (Fig. 24)

a. Arrangement. The P.E.W. evaporator equipment is all located in the Waste Disposal Building (CPP 604). The evaporator surge tank (WL 102) and the concentrate receiver (WL 101), which is also the collection tank for second and third cycle aqueous raffinate concentrate, are both located in an underground cell north of the other evaporator equipment. The gravity feed tank (WL 109), flash tank (WL 113), and reboiler (WL 300) are located in the evaporation cell on the east side of the building. The bubble cap tower (WL 112), condenser (WL 301), condensate receivers (WL 106 and WL 107), condensate pumps (WL 206 and WL 206A), vacuum jet (WL 503), its after-condenser (WL 302), and the separator pot (WL 108 are located in the separation and condensation

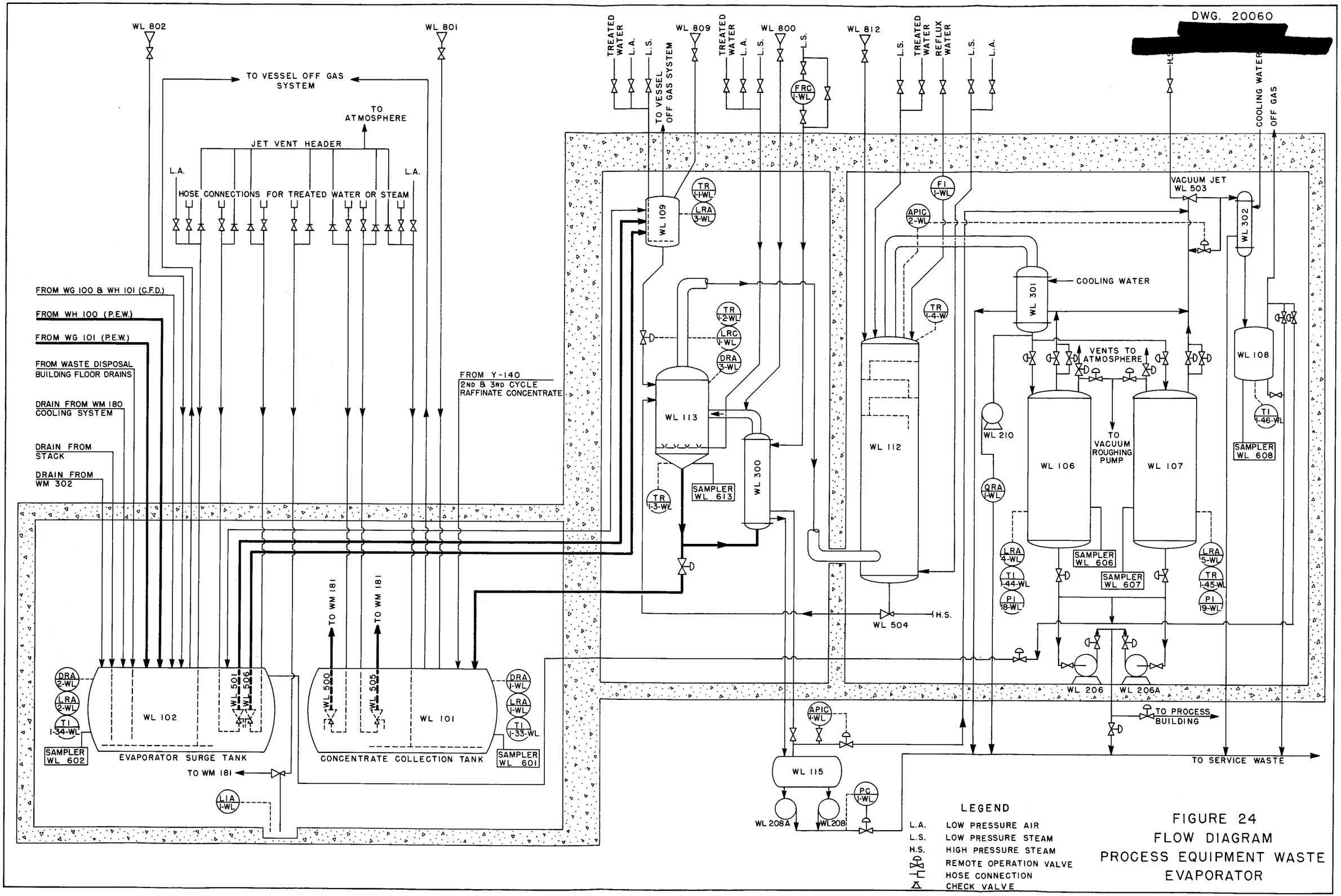

FIGURE 24
FLOW DIAGRAM
PROCESS EQUIPMENT WASTE
EVAPORATOR

cell. The surge tank cell has been described in Sect. 4.4.1, and the other cells in Sect. 2.4. Figures 4 and 5 show the arrangement of the equipment in these cells. Figure 24 is a schematic drawing of the equipment arrangement. The steam condensate collection tank (WL 115) and pumps (WL 208 and WL 208A) are located in the access corridor outside the cells.

The preliminary specifications, which were established by ORNL and submitted to Foster Wheeler Corp., and the original design calculations for the evaporator equipment are presented in the Appendix, Sect. 10.6.5.

b. Evaporator Equipment Instruments. The indicating, recording, controlling, and alarm instruments for the evaporator equipment and for the Tank Farm are mounted on panel board L in the Waste Disposal Building operating corridor. The recording instruments for the evaporator equipment are grouped together at one end of the board. Adjacent to this group there is a graphic panel which contains indicating instruments and control knobs for every major piece of the evaporator equipment. The flow diagram of the evaporator has been engraved on this panel in such a manner that the controls and indicators for each equipment piece are mounted in an outline of that piece. This arrangement has made the evaporator quite easy to operate and to explain to new operators. Figure 25 is a photograph of panel board L showing the graphic panel. A complete description of the instruments for the evaporator and for the Tank Farm is given in the Appendix, Sect. 10.5. The instruments for each equipment piece are mentioned under the sections below devoted to this equipment. The recording instruments for the Tank Farm and for the raffinate collection tanks are mounted on panel board L in a group at the opposite end of the graphic panel from the evaporator recording instruments.

c. Reference Drawings. The following drawings give the details of the piping and the arrangement of the evaporator equipment.

Engineering flowsheets	542-41-P371
	542-41-P322
	542-41-P377
	542-41-P781
	542-41-P1273
Piping drawings	542-41-P746
	542-41-P750
	542-41-P751
	542-41-P752
	542-41-P753

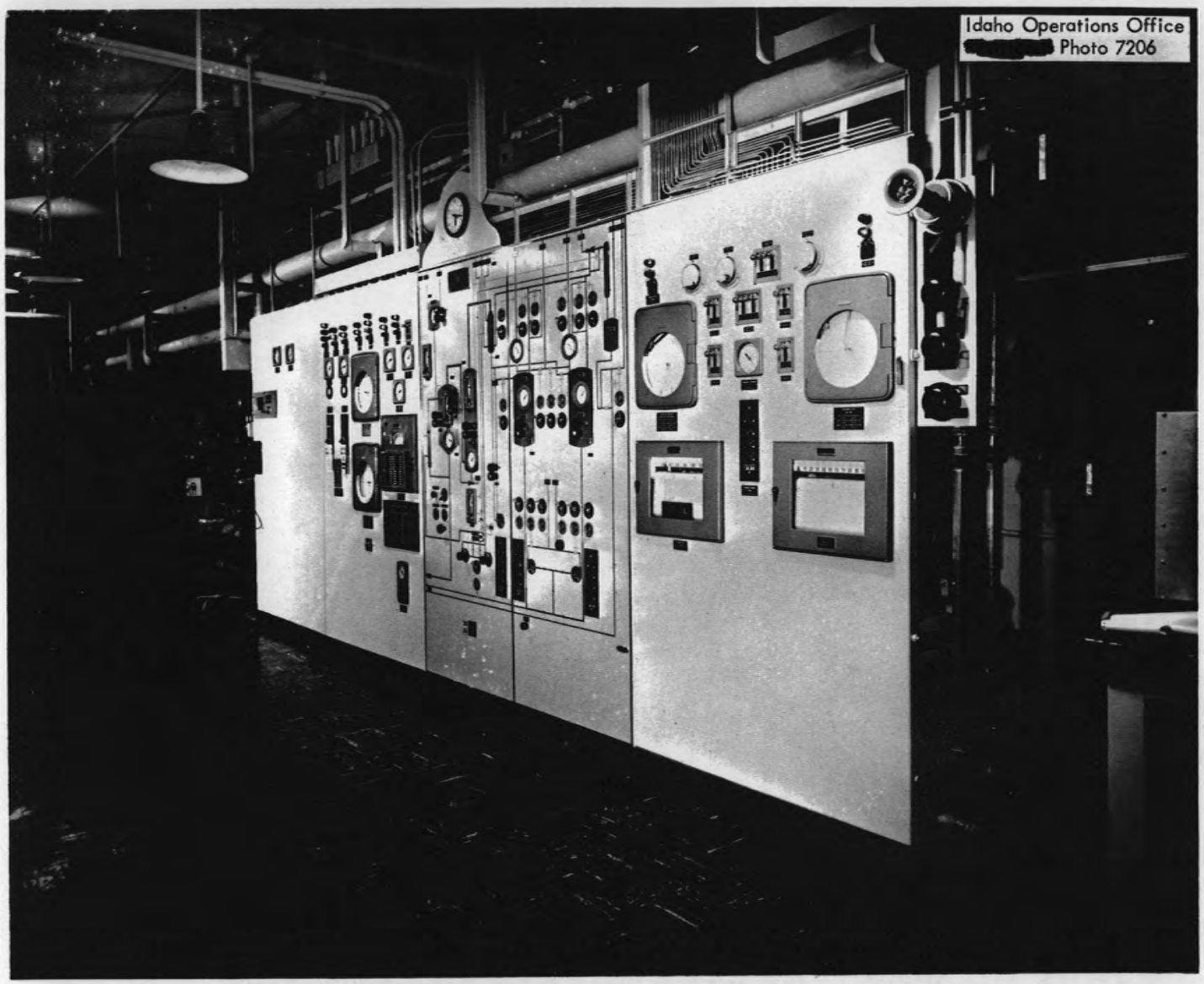

Fig. 25. ICPP: View of Graphic Panel Board, Waste Disposal Building, December 3, 1952.

Piping drawings cont'd	542-41-P760
	542-41-P761
	542-41-P900
	542-41-P894
	542-41-P895
	542-41-P896
	542-41-P898
	542-41-P762
	542-41-P764
Concrete drawings	542-41-F721
	542-41-F726
	542-41-F729
	542-41-F244
	542-41-F734
	542-41-F176
	542-41-F219
	542-41-B387
	542-41-B738
Instrument drawings	542-41-C921
	542-41-C922
	542-41-C924
	542-41-C968
	542-41-C971
	A 15306 (Foxboro Co. Dwg.)

d. Evaporator Surge Tank (WL 102). The P.E.W. from all sources accumulates in the 18,000-gal surge tank, which is a horizontal cylindrical vessel with dished ends and is described in Table 18.

(1) Surge Tank Inlet Lines. Most of the P.E.W. comes to the surge tank by means of three 3-in. stainless steel lines from the Process Building: one from tank WG 101 by pump WC 200, one from tank WH 100 by pump WD 200, and a common line from C.F.D. collection tanks WG 100 and WH 101 by pumps WB 200 and WE 200, respectively. These lines enter the surge tank cell through leak-detection boxes in the roof (see Table 30 for the leak box list). Because the surge tank is vented to the vessel off-gas system, the lines to the tank from the open floor drains in the Waste Disposal Building and in the stack extend to the bottom of the tank to prevent excess air leakage to the off-gas system. Seal pots are provided at the ends of the two floor drain lines, which are vented to the building exhaust air duct at their high end to assure that the flow of fumes in the drains is away from the cells.

Table 18

Design Data for Evaporator Surge Tank WL 102

Capacity	18,400 gal
Dimensions	Straight side length, 30 ft 0 in.; o.d., 10 ft 0 in.
Materials of construction	Ends, type 347 stainless steel, 7/16 in. thick; shell, type 347 stainless steel, 5/16 in. thick; bolting, type 302 stainless steel
Design pressure	Atmospheric
Design temperature	200°F
Operating pressure	Atmospheric
Operating temperature	100°F
Fabricator	Foster Wheeler Corp.; Dwg. No. H-33085-C
Construction data	No heat treatment; pickled and passivated; welds radiographed (for testing and inspection procedure see ORNL CF-50-10-137)
Purchase data	Vessel sketch 542-12-V500E, Bechtel P.O. 1699-OR-10
Costs	Materials $14,814 Fabrication 14,000 Total $28,814 (exclusive of piping and installation)

(2) Instruments. The density, liquid level, and temperature of the surge tank contents can be observed in the operating corridor by means of a density recorder-alarm (DRA-2-WL), level recorder-alarm (LRA-2-WL), and a temperature indicator point (TI-1-34-WL). The thermocouple for the TI extends to the bottom of the tank. A spare set of dip tubes with continuous air purge for the DRA and LRA is connected to the tank. The air transmitters for the DRA and LRA and the air bleed rotameters for the spare dip tubes are located on a rack in the Waste Disposal Building sample corridor above the tank. Instruments are described in the Appendix, Sect. 10.5.

(3) Sparger. For agitation, the surge tank is provided with a sparger in two sections, each consisting of a 1-in. stainless steel pipe 10 ft long and 6 in. above the bottom of the tank. The sparger pipes are perforated by 40 holes 3/32 in. in diameter and two 1/8-in. weep holes, which pass a total of 270 ft^3 of air per minute (see p. 199, Appendix, for calculations). The sparger control valves are located in the operating corridor. Low-pressure air is connected directly to the sparger in the operating corridor, but a hose connection is provided to supply low-pressure steam or flushing water.

(4) Off-Gas Connection. A 3-in. stainless steel line connects the surge tank to the vessel off-gas system. Unlike the off-gas lines from WM 100, WM 101, and WM 102, this line is not valved, because the contents of WL 102 are not expected to boil.

(5) Submerged Transfer Jets. Two submerged jets, WL 501 and WL 506, are provided in the bottom of WL 102 for transferring P.E.W. to the evaporator gravity feed tank WL 109. The tank slopes toward the south to permit these jets to leave a minimum heel when emptying the tank. The jet discharge lines to WL 109 and of 2-in. stainless steel pipe. The 1-in. steam supply line to each jet is encased in a 3-in. stainless steel pipe inside the tank to insulate it from the liquid in the tank. These steam supply lines connect to the high pressure steam header in the operating corridor, where they are provided with valves and connections to the jet vent header through check valves. It is necessary to provide vents for jets to prevent a vacuum (caused by steam condensing in the supply line after the control valve has been shut off) from sucking hot material from WL 102 into the operating corridor. Strainers are provided in the steam supply lines, and the supply lines downstream from the strainers are stainless steel in order to prevent plugging the small orifices in the jets with scale or rust.

One jet operating continuously will supply more than the 300 gal per hour feed consumption of the evaporator. The excess overflows from WL 109 and returns to WL 102. Continuous operation of both jets with 50% return of feed to WL 102 from the gravity feed tanks has failed to overheat the surge tanks (maximum temperature reached is 80°F). The transfer jets are listed in the Appendix, Table 37.

(6) Addition Funnel. Addition funnel WL 802 has been provided for WL 102 as a means of introducing decontamination agents and other fluids to the tank. The funnel and its valve are located with similar funnels for other CPP 604 vessels at ground level outside the north entrance to the building. The 1-in. stainless steel funnel line connects to WL 102 through a 1-in. welded nozzle in the top of the tank.

(7) Sampler. Surge tank WL 102 has a sampler, WL 602, located in sample gallery 2 in the east end of the sample corridor. Samplers are described fully in Sect. 8.2.

e. Gravity Feed Tank WL 109. Feed tank WL 109 is supported by stainless steel brackets in the Evaporation Cell wall high enough to drain by gravity through a nozzle in its bottom to the flash tank. All nozzles on the tank are flanged or welded. Table 19 lists the design data for the tank.

Table 19

Design Data for Gravity Feed Tank WL 109

Description	Vertical cylinder, with dished ends
Capacity	270 gal total, 197 gal below overflow line
Dimensions	Straight section, 5 ft 0 in.; o.d., 3 ft 0 in.
Materials of construction	Shell and heads, type 347 stainless steel; internals, type 347 stainless steel; external bolting, type 302 stainless steel; gaskets, teflon and Chemseal No. 7 (U.S. Gasket Co.)
Design pressure	Vacuum and 25 psig; manhole and nozzles 150 psig
Design temperature	200°F
Operating pressure	Vacuum and atmospheric
Operating temperature	75°F
Construction data	No heat treatment required; pickled and passivated; stainless steel finish outside and inside hot rolled and pickled; all welds full penetration; butt welds radiographed (for testing and inspection procedure see ORNL CF-50-10-137, also see ORNL spec. 51-1-55)
Fabricator	W. K. Mitchell & Co., Inc., Philadelphia, Pa., Dwg. No. E-51-1190-B (four sheets), job 183
Purchase data	Purchase requisition 542-458C-C4; Bechtel P.O. 1699-OR-13B
Costs	Materials $1,090 Fabrication 1,359 Total $2,449 (exclusive of piping and installation)

Figure 26 lists the flows through the feed tank for normal operation.

(1) Feed Tank Sparger. A 1-in. pipe sparger perforated with twelve 3/32-in. holes plus a 1/16-in. weep hole has been provided in the bottom of the feed tank for agitation and decontamination. This sparger will pass approximately 75 ft^3 of air per minute at 40 psig, which is far too much for agitation alone. The excess capacity is desirable for steam cleaning during decontamination. The sparger is supplied with low pressure air and steam and with treated water through a 1-in. stainless steel line entering the tank through a welded nozzle in the top. Control valves and a pressure gauge (PI-10-WL) for the sparger supply services are located in the operating corridor.

(2) Off-Gas Connection. The feed tank is vented to the vessel off-gas system through a flanged nozzle in the top and a 1-1/2-in. line containing a valve. The tank is operated at atmospheric pressure.

(3) Instruments. The feed tank temperature is recorded on TR-1-1-WL and indicated on TI-1-38-WL. The liquid level is recorded on a recorder-alarm (LRA-3-WL), which warns of low level in the tank, and is indicated also on LIA-3 on the graphic panel.

(4) Addition Funnel. Funnel WL 809 has been provided as a means of introducing decontamination agents and other fluids to the tank. It is located with its valve along with funnels for other evaporator vessels at ground level outside the north entrance to the Waste Disposal Building. The funnel connects to the tank through a 1-in. stainless steel line and a welded nozzle.

f. Evaporator Flash Tank--Accumulator WL 113. Vessel WL 113 serves both as a flash tank to vaporize the water from the P.E.W. after it is heated in the reboiler and as an accumulator for the P.E.W. concentrate left after the water flashes off. The evaporator is expected to give a concentration factor of 30 to 1. The 1700 gal combined capacity of the reboiler and flash tank (measured to the bottom of the inlet elbow inside WL 113) provides several days' operating time before the concentrate accumulated in WL 113 attains a sufficient density to require dumping. The volume of P.E.W. maintained in WL 113 during operation depends on the characteristics of the waste and varies between 900 and 1350 gal. Too high a level tends to cause sloshing over and excess entrainment. Figure 27 gives the flows through the flash tank and its reboiler.

DWG. 20101

[redacted]

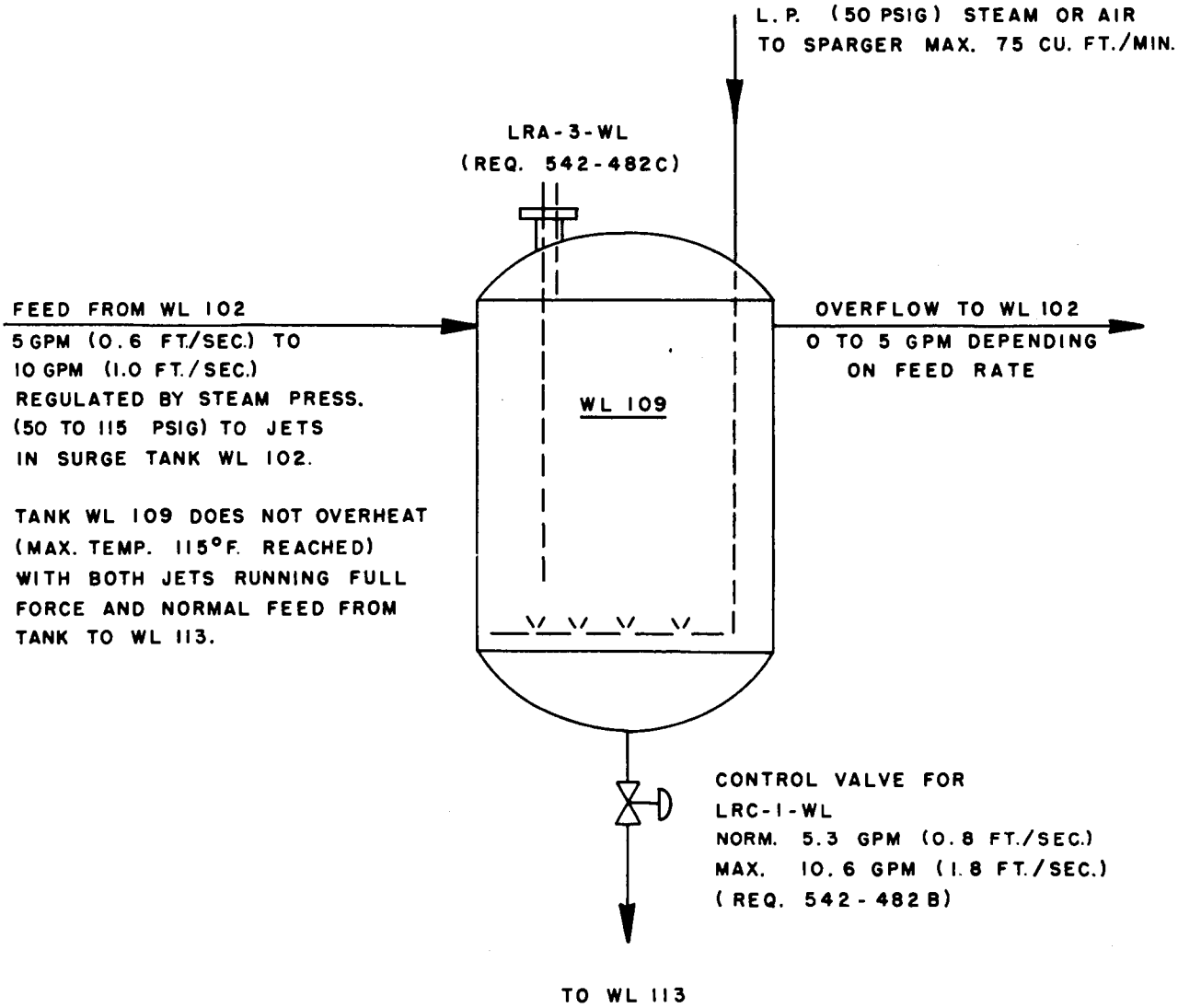

FIGURE 26

FLOW IN GRAVITY FEED TANK

[redacted]

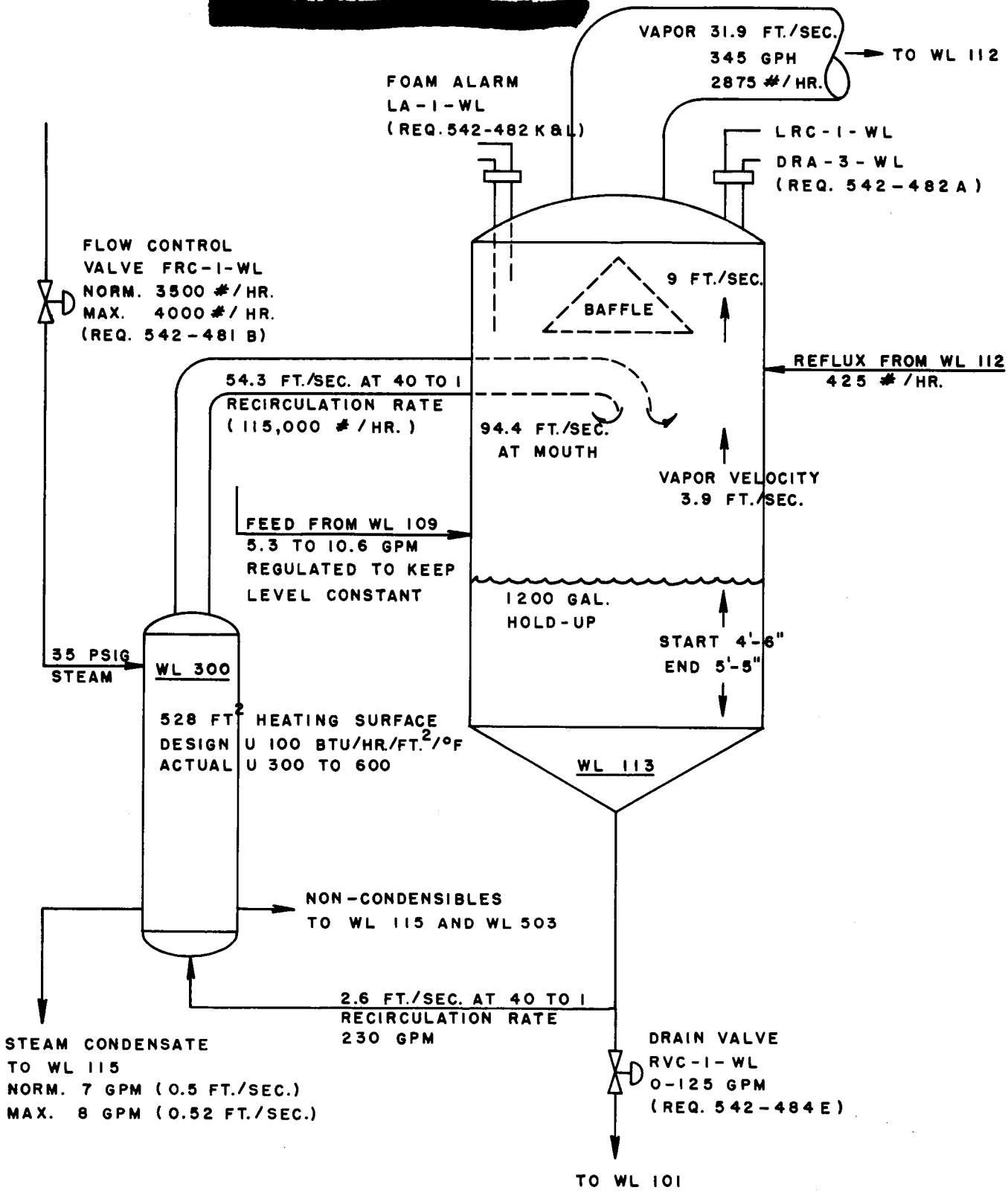

FIGURE 27

FLOWS IN REBOILER AND FLASH TANK-ACCUMULATOR

The flash tank is supported on stainless steel legs in the center of the east half of the evaporation cell. Table 20 gives the design data for this vessel. The tank is not insulated because of the difficulty of decontaminating insulation.

Table 20

Design Data for Flash Tank--Accumulator WL 113

Description	Vertical cylinder, dished top head, cone bottom; provided with a cone vapor baffle in upper section
Dimensions	Straight side length, 11 ft 9 in.; overall length, 17 ft 0 in.; o.d.; 6 ft 0 in.
Design pressure	Vacuum and 25 psig
Design temperature	250°F
Operating pressure	Vacuum and atmospheric
Operating temperature	210°F
Materials of construction	Shell and heads, type 347 stainless steel; internals, type 347 stainless steel; internal and external bolting, type 302 stainless steel; gaskets, teflon and Chemseal No. 7 (U.S. Gasket Co.)
Construction data	No heat treatment required; all longitudinal and girth seam butt welds radiographed; all welds continuous and full penetration; joint efficiency 90%; pickled and passivated (for testing and inspection procedure see ORNL CF-50-10-137 and 51-1-55)
Fabricator	Alloy Fabricators, Perth Amboy, N.J.; Dwg. Nos. A 1257-A8 and -A9
Purchase data	Requisition 542-458-D-C6, Bechtel P.O. 1699-OR-10A
Costs	Materials $ 4,846 Fabrication 6,311 Total $11,157 (exclusive of piping and installation)

(1) Flash Tank Inlet and Outlet Lines. A 1-1/2-in. stainless steel line supplies feed to flash tank WL 113 through a 1-in remotely controlled valve operated by level recorder-controller LRC-1-WL. The reflux liquid and condensed vapor from radiation losses in bubble cap tower WL 112 is returned to WL 113 through a 1-in. line from jet WL 504. The mixture of hot liquid and flashing vapor from the reboiler enters WL 113 from the reboiler through a 12-in. flanged line mounted in a 16-in. flanged nozzle in the upper half of the side of the vessel. The line terminates in a 12-in. elbow turned down toward the liquid in WL 113.

Vapor leaves the flash tank through an 18-in. line in the top of the vessel. This line drops to about 3 ft above the cell floor before passing through a 20-in. sleeve in the wall. Liquid leaves WL 113 through a 6-in. line in the cone bottom, which also connects to the bottom of the reboiler tubes for recirculating the P.E.W. during concentration. A 3-in. valve (RVC-1-WL) operated from an air switch on the graphic panel board permits the concentrate to drain through this line to receiver WL 101. This valve has a 1/4-in. water flush line connected to the top of its bellows housing for removal of crystalline matter which might damage the contracting bellows. A 1-in. line to the evaporation cell floor drain connects to the large drain from WL 113 for draining decontamination fluids to surge tank WL 102. This small drain contains a 1-in. remotely operated valve (RVC-21-WL), which is also supplied with a flush line to its bellows.

(2) Instruments. The flash tank--accumulator WL 113 is equipped with a density recorder-alarm (DRA-3-WL), a liquid level recorder-controller (LRC-1-WL), a foam level alarm (LA-1-WL), a temperature recorder point (TR-1-2-WL) and a temperature indicator point (TI-1-39-WL) for the vapor space, and a temperature recorder point (TR-1-3-WL) and temperature indicator point (TI-1-40-WL) for the liquid space. The alarm lights for density, liquid level, and foam level are mounted on the graphic panel board. The density is indicated by DIA-3 and the liquid level is indicated and the level control is set by knobs on LIC-1 on the graphic panel.

(3) Sparger. A 1-in. pipe perforated with twelve 3/16-in.-diameter holes is provided in the bottom of WL 113 as a sparger for agitation and for steam decontamination and as a means of preheating the feed. These holes are larger than the desirable size and pass a total of 300 ft^3 of air per minute at 40 psig, which is about ten times greater than necessary for agitation. The flow can be reduced by controlling the valve in the steam and air supply lines, but the large holes are not undesirable for admitting steam. Pressure gauge PI-11-WL indicates the steam

pressure to the sparger in the operating corridor.

(4) Spray Nozzle. A 1/4-in. spray nozzle is installed inside the flash pot between the baffle and the liquid surface and pointed toward the liquid. The 1-in. supply line to the nozzle is welded through the side of the tank and capped off outside for future connection to water or an antifoam tank. The purpose of the spray nozzle is to combat foaming during evaporation.

(5) Sampler WL 613. Elevation difficulties make it impossible to draw a sample from the flash tank in the sample corridor, where the heavily shielded sample galleries must be located. Sampler 613 connects to a small pot (fabricated from two 4- by 6-in. eccentric reducers welded together) in the drain from WL 113 to tank WL 102. Flash tank drain valve RVC-1-WL must be opened briefly to allow a small amount of liquid to drain to the pot when the flash tank is sampled. The drain valve air switch on the graphic panel is arranged with a sample position and a dump position. When the valve is set in the sample position, a sample quantity is drained to the sample pot by pushing a knob beside the switch. The amount drained to the sample pot is determined by the adjustable air pressure set on the valve and by the length of time the knob is held in position. Purchase requisition 542-484-L (not given here) diagrams this air switch arrangement for RVC-1-WL.

g. Reboiler WL 300. Reboiler WL 300 is the evaporator heat exchanger, which is uninsulated. It is suspended adjacent to the flash tank by means of stainless steel wall brackets. The P.E.W. circulates through the flash tank and the reboiler tubes, entering WL 300 at the bottom through a 6-in. flanged line and leaving as a mixture of liquid and vapor through a 12-in. flanged nozzle at the top to return to the flash chamber of WL 113. Natural convection generated by the heat applied in the reboiler shell causes the recirculation. This feature was the prime consideration in the selection of this type heater, as it avoids the necessity of using a recirculating pump. Mounting the heater outside the flash chamber gives accessibility to the tubes for easy cleaning. Table 21 gives the design data for the reboiler. Calculations and original specifications for the system can be found in the Appendix, Sects. 10.6.5, 10.6.6, and 10.6.7. Figure 26 shows the flows through the reboiler and the flash tank.

Table 21

Design Data for Reboiler WL 300

Description	Vertical shell-and-tube thermosyphon heat exchanger with internal baffles and cone ends
Dimensions	Overall length, 10 ft 9 in.; o.d., 20 in.; o.d. of expansion section, 30 in.
Tubes	336 tubes on 5/16-in. triangular pitch; 3/4 in. o.d.; 16 BWG, 8 ft 0 in. long; total heat transfer surface 528 ft^2
Baffles	Three segmental (half circle) type, spaced 2 ft apart; one plate over steam inlet
Duty	To evaporate 3200 lb of water per hour from a salt solution entering and leaving tubes at 136°F (at 135 mm Hg absolute pressure); sp. gr., viscosity, sp. heat, and other characteristics of waste considered those of water
Heat exchanged	3,250,000 Btu/hr; LMTD 74°F; required U, 83.2 Btu/hr/ft^2/°F
Steam	3520 lb per hour entering and leaving shell at 210°F (14.1 psia pressure)
Materials of construction	Tubes, type 347 stainless steel; shell, type 347 stainless steel; tie rods, type 304 ELC stainless steel; gaskets, Chemseal No. 7 (U.S. Gasket Co.)
Design pressure	Shell 150 psig; tubes 25 psig and full vacuum
Design temperature	Shell 350°F; tubes 250°F
Test pressure	Shell 225 psig; tubes 38 psig
Operating pressure	Shell 50 psig max.; tubes atmospheric or full vacuum
Operating temperature	Shell 250°F(actual); tubes 150°F(actual)

Construction data	No stress relief by heat treatment; pickled and passivated; all nozzle and head welds full penetration; all welds radiographed; no corrosion allowance; 90% joint efficiency (for testing and inspection procedure see ORNL CF-50-10-137)
Fabricator	Foster Wheeler Corp., Dwg. No. H 33151-B
Purchase data	Requisition 542-445B-C1, Bechtel P.O. 1699-OR-16-A
Costs	Materials $ 3,538 Fabrication 4,550 Total $ 8,088 (exclusive of piping and installation)

Several experimental runs of the evaporator demonstrated that the reboiler is overdesigned. It was able to evaporate 1150 gal of water per hour from cold waste from dead uranium runs in the CPP. The U values varied from a low of 213 Btu/hr/ft^2/^{o}F under vacuum operation to a high of 605 for atmospheric evaporation. Difficulty in measuring the steam and vapor temperatures accounted for the big discrepancy in U values, but the high evaporation rate demonstrated that the average U for vacuum evaporation is about 300, or three times the design value. The data from the experimental runs are presented on p. 239, Appendix.

(1) Reboiler Steam Supply. Low-pressure steam (35 psig max) enters the WL 300 shell through a 6-in. flanged nozzle near the top of one side and is dispersed over the tubes by several baffles. The flow of steam to the reboiler is regulated by means of a flow recorder-controller (FRC-1-WL) mounted on the panel board in the operating corridor. The indicator and control knobs for the instrument are mounted on the graphic panel. The flow orifice in the steam line, the flow transmitter, and the 3-in. control valve for FRC-1-WL are located in the pipe corridor with an extension gauge in the operating corridor. A 4-in. by-pass line and valve are provided around the control valve in the pipe corridor.

(2) Removal of Steam Condensate and Noncondensables. The steam, which condenses as it passes over the tubes in the reboiler shell, drains from WL 300 through a 3-in. flanged nozzle near the bottom of the side and flows by gravity through a 3-in. line to condensate collection tank WL 115 in the access corridor. A 1/2-in. line to conduct noncondensable gases from the reboiler to the top of WL 115

and ultimately to the atmosphere connects to the WL 300 shell through a 1/2-in. welded nozzle located just above the condensate nozzle.

(3) Absolute Pressure Indicator-Controller APIC-1-WL (Req. 542-483-B and C). The 1/2-in. noncondensables line from WL 300 connects to a 1-in. line, which vents WL 115 to steam jet exhauster WL 503. A remotely operated valve in this 1-in. line regulates the flow of noncondensables to WL 503 and provides a means of controlling the pressure in WL 115 and in the reboiler shell. The valve is operated by an absolute pressure indicator-controller (APIC-1-WL), whose indicator dial and control knobs are mounted on the graphic panel board. The control valve and transmitter are mounted in the access corridor near WL 115. APIC-1-WL is designed to control automatically the temperature difference between the condensing steam outside the reboiler tubes and the P.E.W. being heated inside the tubes in order to prevent scaling or coking by too rapid heating. The control valve can also be operated manually by a knob on the graphic panel board.

(4) Addition Funnel WL 800. Addition funnel WL 800 has been provided for WL 300 as a means of introducing decontamination agents and other fluids to it and to WL 113. The funnel and its valve are located with similar funnels for other CPP 604 vessels at ground level outside the north entrance to the building. The 1-in. stainless steel funnel line connects to the vapor line through a welded coupling.

h. Collection System for Reboiler Condensate (Tank WL 115 and Pumps WL 208 and 208A). The reboiler steam condensate flows by gravity to insulated collection tank WL 115, which is supported on channel iron legs above the condensate pumps WL 208 and 208A in the access corridor. Table 22 gives the design data for this system, which must be used instead of a simple steam trap because the steam condenses at below atmospheric pressure during vacuum evaporation.

The float switch (LC-1-WL) in the tank acts as a pilot for two across-the-line magnetic switches, which alternate the two pumps. The pumps discharge the condensate to the service waste header, each starting approximately once every 10 min and running for about 2 min at an evaporation rate of 400 gal per hour. This seems too frequent starting for long motor life.

A valve (Req. 542-483-J-C1) operated by pressure controller PC-1-WL (Req. 542-483-G) is provided in the common discharge from both pumps. The pressure controller is set to keep the valve closed until one pump is started. This arrangement prevents uncondensed steam from blowing through the pumps during atmospheric evaporation.

Table 22

Design Data for Steam Condensate Tank WL 115 and Pumps WL 208 and 208A

Description	Tank: horizontal cylinder with dished ends, galvanized iron inside and out, removable bronze strainer on inlet, clean-out with removable cover, inside float switch for pumps, and exterior gauge glass Pumps: Jennings centrifugal, size S-23-F, bronze fitted
Dimensions	Tank: straight side, 36 in.; i.d., 24 in.
Capacity	Tank: 75 gal Pumps: 20 gal/min, each; 1735 rpm and 20 psig
Specifications	Tank: to withstand 40 psig internal pressure and 10 psig vacuum Pumps: 49 ft TDH; suction pressure 3 to 25 psig, discharge pressure 11 to 45 psig, differential pressure 20 psig; max. operating temperature 263°F; each driven by 2 hp, 1750 rpm, close-coupled motor for 440 volts; 3 phase; 60 cycle; 40°C rise, suitable for 5000 ft-elevation operation
Fabricator	Nash Engineering Co., Dwg. Nos. A 6571, C 7164, and SWD 4840
Purchase data	Requisition 542-470-B C2, Bechtel P.O. 1699-OR-542-470-B
Cost	$1940 f.o.b. South Norwalk, Conn. (exclusive of installation)

i. Bubble Cap Tower WL 112. Vapor boiled off the P.E.W. in WL 113 passes to bubble cap tower WL 112, whose function is to remove solid particles and liquid droplets from the vapor before it is condensed. The vapor enters the tower at the bottom tangentially. The tower is supported on legs in the separation and condensation cell. Table 23 lists the design data for the tower. Figure 28 diagrams the flows through the tower, which is not insulated.

Table 23

Design Data for Bubble Cap Tower WL 112

Description	Vertical cylinder with dished ends; top half contains 4 trays of 199 3-in. bubble caps each; trays 2 ft apart; one 18-in. manhole in top with removable section in each tray gives access to upper tower interior; one 18-in. manhole in lower side provides access to bottom internals; lower half of tower is free space for de-entraining
Dimensions	Straight side, 19 ft 6 in.; overall height, 23 ft 0 in.; o.d., 6 ft 0 in.
Materials of construction	Shell and heads, type 347 stainless steel 3/8 in. thick; all welded internals, type 347 stainless steel; all bolting, type 304 stainless steel; gaskets, teflon and Chemseal No. 7
Design pressure	25 psig and full vacuum
Design temperature	250°F
Test pressure	37.5 psig
Operating pressure	Atmospheric and full vacuum
Operating temperature	200°F
Construction data	No heat treatment; all girth and longitudinal welds radiographed; joint efficiency 90%; all welds continuous and full penetration; pickled and passivated (for test and inspection procedure see ORNL-CF-50-10-137)
Fabricator	Alloy Fabricators, Perth Amboy, N.J., Dwgs.A-1257-A5, -A6, and -A7
Purchase data	Requisition 542-458-E-C4, Bechtel P.O. 1699-OR-10A, vessel sketch 542-41-V326F
Costs	Materials $10,028 Fabrication 11,681 Total $21,709 (exclusive of piping and installation)

DWG. 20122

[redacted]

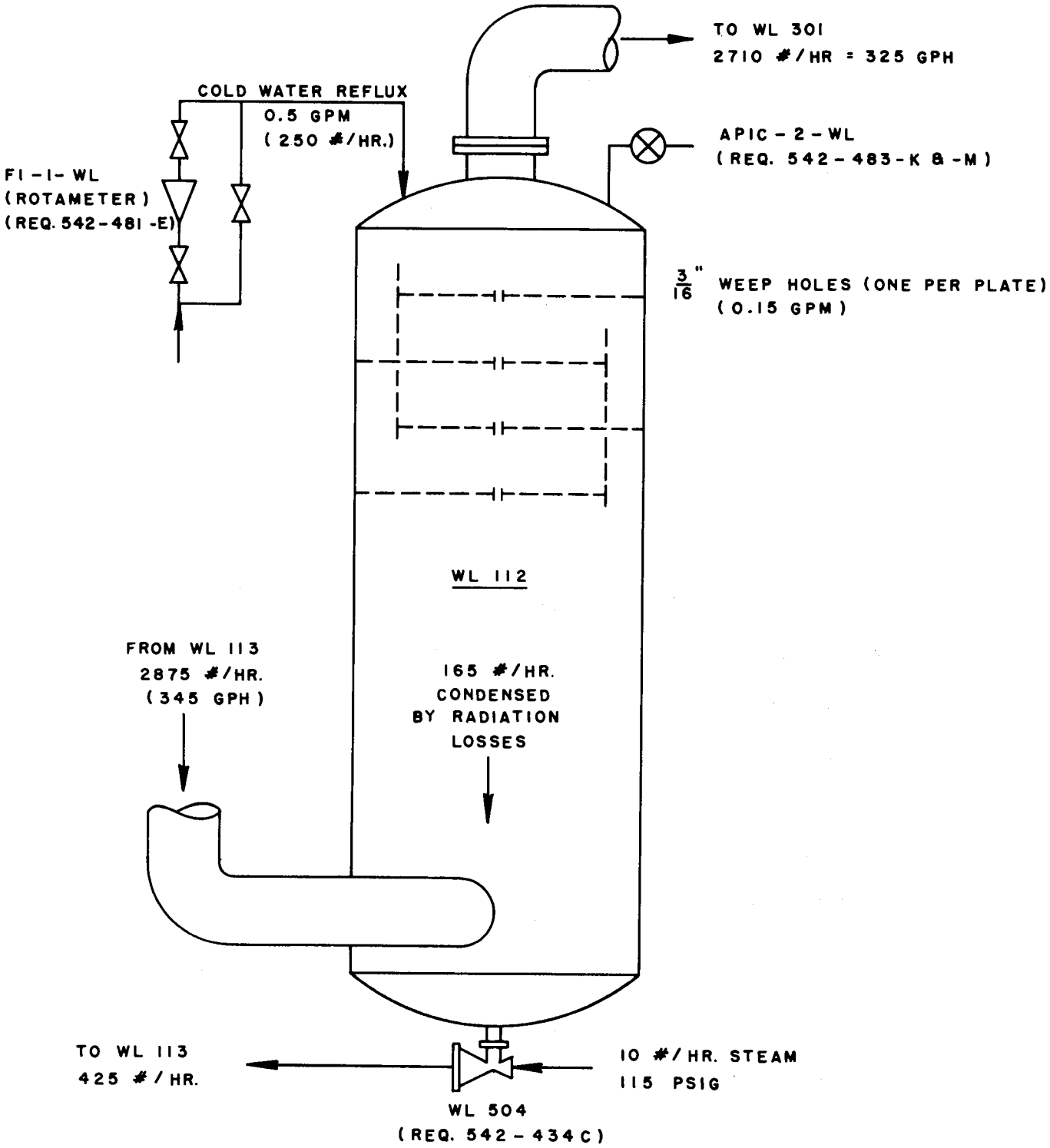

FIGURE 28
FLOW THROUGH BUBBLE CAP COLUMN

(1) Reflux. Removal of radioactive particles from the vapor stream can sometimes be improved by adding water to the condensed vapors on the bubble cap trays through which the free vapors must pass. This reflux water is introduced onto the top tray through a 1-in. welded nozzle near the top of the column straight section. The control valve and a rotameter (FI-1-WL) for regulating the flow of reflux water are located in the operating corridor. The reflux water flows to WL 112 through a 1-in. line that is carbon steel in the operating corridor and stainless steel in the separation and condensation cell. The reflux and any condensed vapors work down through the column, overflowing the 1-1/2-in. weirs on each plate to downspouts connecting the plates. The downspout of the bottom plate drains to the bottom of the column through a 2-in. pipe. The dished bottom of the vessel plus the portion of the straight section below the vapor inlet holds 295 gal. A 1/2-in. jet, WL 504, connected to the 2-in. flanged bottom nozzle of WL 112 transfers liquid continuously to WL 113 through a 1-in. stainless steel line. The control valve, a strainer, and a pressure gauge (PI-13-WL) for the jet are located in the operating corridor. The jet vents to WL 112 through a 1/2-in. welded nozzle near the top of the vessel straight section.

(2) Sparger. Bubble cap tower WL 112 is equipped with a sparger operated by low-pressure air or steam for agitation during decontamination. The control valves and pressure gauge (PI-12-WL) for the sparger are in the operating corridor. The 1/2-in. supply line to the sparger enters WL 112 through a 2-in. flanged nozzle that is 34 in. above the bottom of the straight side. The sparger is merely a 2-in. pipe with open end, which extends to within 9 in. of the bottom of the straight section.

(3) Addition Funnel WL 812. Addition funnel WL 812 has been provided for WL 112 as a means of introducing decontamination agents and other fluids to the column. The funnel and its valve are located with similar funnels for other CPP 604 vessels at ground level outside the north entrance to the building. The 1-in. stainless steel funnel line connects to WL 112 through a 1-in. welded nozzle in the top.

(4) Spray Nozzles and Spare Nozzles. Three 2-in. flanged nozzles, each housing a 3/8-in. spray line extending 6 in. into WL 112, have been installed 120° apart about the periphery of the column 16 in. below the top of the straight section. The spray lines are supplied with low-pressure steam or treated water from a 2-in. line that is stainless steel in the cell and carbon steel in the operating corridor. The control valves for the line are in the operating corridor.

(5) Instruments. Tower WL 112 is equipped with a level indicator-alarm (LIA-2-WL) for the purpose of warning against submergence of the vapor inlet. The indicator dial and alarm lights are mounted on the graphic panel board in the operating corridor. The dip tubes for LIA-2-WL enter WL 112 through a 3-in. flanged nozzle in the side.

The vapor temperature in WL 112 is indicated on point TI-1-41-WL and recorded on TR-1-4-WL on the panel board. The common thermocouple for both instruments is mounted in a 1/2-in. welded thermowell in the top of WL 112.

The vacuum in evaporator vessels WL 113, WL 300 tubes, WL 112, WL 301 tubes, WL 106, and WL 107 is controlled by absolute pressure indicator-controller APIC-2-WL, which is connected to a 1/2-in. welded nozzle in the top of WL 112. The transmitter for the instrument is located on the wall of the operating corridor behind the panel board. The indicator dial and control knobs are mounted on the graphic panel board. APIC-2-WL controls the vacuum by regulating the opening and closing of a valve in a by-pass line around steam jet exhauster WL 503. This exhauster operates at full capacity during vacuum operation. The by-pass valve admits steam and air to the suction side of the exhauster from its discharge side, thus increasing the pressure in the system.

j. Condenser WL 301. Vapors from the top of bubble cap tower WL 112 enter the top of the main evaporator condenser WL 301 through an 18-in. line. The condensed liquid drains from the condenser bottom through a 3-in. line to the receivers, and noncondensables are drawn away through a 1-in. line to the vacuum jet. The condenser is supported from WL 112 by brackets. Table 24 gives the design data for WL 301. Calculations and preliminary specifications are given on pp. 213 and 207. The use of the exhausted cooling water to cool tanks WM 100, WM 101, and WM 102 has been described in Sect. 3.4.1h. Figure 29 and Fig. 9, p. 29, show the flows through the condenser and its water system.

k. Condensate Monitor. The P.E.W. condensate from condenser WL 301 is monitored continuously for radioactivity. A 1-in. stainless steel line from the bottom of the 3-in. condenser drain to WL 106 and WL 107 leads to the suction side of pump WL 210 located on the floor below WL 301. This small pump is a Moyno positive displacement type provided with a by-pass orifice to permit throttling the pump discharge in order to regulate the flow. This pump discharges through a 3/4-in. stainless steel line to the monitor chamber

Table 24

Design Data for Condenser WL 301

Description	Vertical cylindrical shell-and-tube heat exchanger with dished bottom and cone top
Dimensions	Overall length, 8 ft 10-5/16 in.; o.d., 26 in.; o.d. expansion section, 36 in.
Tubes	604 tubes on 15/16-in. triangular pitch; o.d., 3/4 in., 16 BWG, 6 ft 0 in. long; total heat transfer surface 712 ft^2
Baffles	11 segmental type spaced 5-5/8 in. apart
Duty	To condense 2655 lb of water vapor per hour, entering at 125°F and leaving at 100°F, plus handling 30 lb of noncondensables per hour (all at 100 mm Hg absolute pressure witha 5 mm Hg pressure drop through tubes)
Water	68,300 lb per hour (137 gal per min) entering at 55°F and leaving at 95°F with a 5 psi pressure drop through shell
Materials of construction	Tubes, baffles, and shell, type 347 stainless steel; tie rods, type 304 ELC stainless steel; gaskets, teflon and Chemseal No. 7
Design pressure	Shell 120 psig; tubes 25 psig and full vacuum
Design temperature	Shell 150°F; tubes 250°F
Test pressure	Shell 180 psig; tubes 38 psig
Operating pressure	Shell 85 psig; tubes atmospheric and full vacuum
Operating temperature	Shell 95°F; tubes 200°F

DWG. 20123

[redacted]

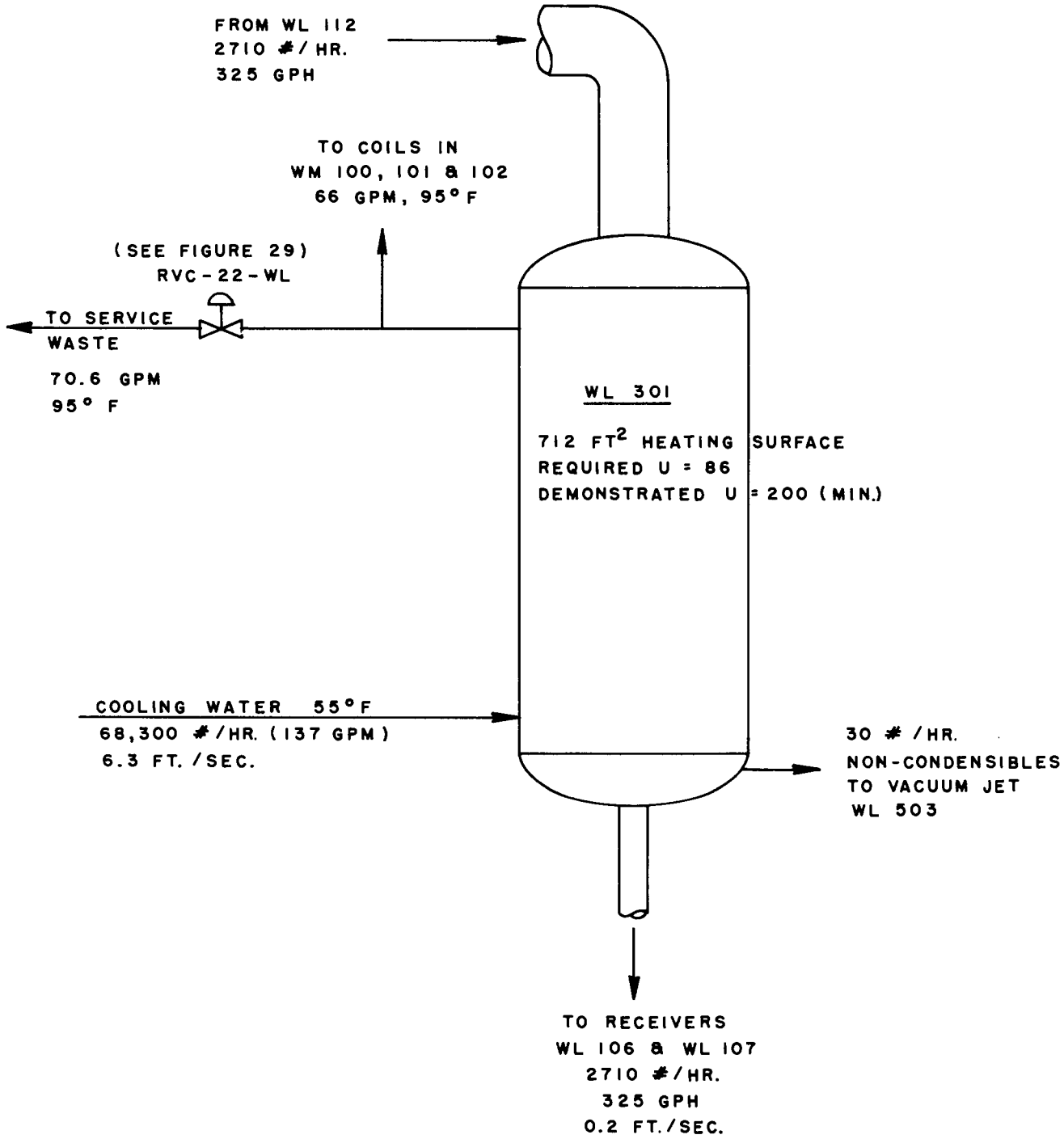

FIGURE 29
FLOW THROUGH CONDENSER

Construction data	No heat treatment; pickled and passivated; all nozzle and head welds full penetration; all welds radiographed; no corrosion allowance; 90% joint efficiency (for testing and inspection procedure see ORNL CF-50-10-137)
Fabricator	Foster Wheeler Corp., Dwg. No. H 33152-B
Purchase data	Requisition 542-445-C-C1, Bechtel P.O. 1699-OR-16A
Costs	Material $4,927 Fabrication 5,713 Total $10,640 (excluding installation)

mounted on a table in the southeast end of the operating corridor. Valves and a rotameter mounted on the table regulate the flow of P.E.W. condensate to the monitor. Approximately 4.25 liters per minute is the optimum flow. The condensate drains by gravity to the service waste header from the monitor.

A Geiger tube suspended inside the monitor chamber detects radioactivity in the condensate, which flows around the tube without touching it. The electrical impulses from the Geiger tube are amplified by electronic equipment mounted near the monitor table and are relayed to a Brown recorder-alarm (QRA-1-WL) mounted on the panel board. A continuous record of the radioactivity level is thus kept and an alarm provided to warn against high activity level. When the P.E.W. condensate activity becomes too high, the liquid collected in receivers WL 106 and WL 107 and in separator tank WL 108 can be returned to surge tank WL 102. Details of the similar monitor system for service waste are given in Sect. 7.7 (Reference: ORNL Instrument Department Manual Q-1167, Q-1270).

1. Condensate Receivers WL 106 and WL 107. Condensate receivers WL 106 and WL 107 are supported on legs in the east half of the separation and condensation cell with their centers 18 ft apart. The tanks are connected on top by a platform, which provides access (by means of a ladder to the floor) to the remotely operated valves (RVC's) in the inlet, vacuum, and vent lines and to the manholes in the tops of the tanks. Table 25 gives the design data for the receivers. Figure 30 gives the flows through the receivers and indicates the RVC's.

Table 25

Design Data for P.E.W. Condensate Receivers WL 106 and WL 107

Description	Vertical, cylindrical tanks with dished ends and flanged nozzles; 18-in.-o.d. manhole in top of each; capacity 4853 gal each
Dimensions	Straight section, 12 ft 4 in.; overall height 19 ft 0 in. (exclusive of legs); o.d., 96 in.
Design pressure	25 psig and full vacuum
Design temperature	250°F
Operating pressure	Vacuum and atmospheric
Operating temperature	200°F (max)
Materials of construction	Shell and ends, type 347 stainless steel 1/2 in. thick; internals, type 347 stainless steel; internal and external bolting, type 302 stainless steel
Construction data	No stress relieving by heat treatment; all welds to be continuous and full penetration; all longitudinal and girth butt seams radiographed (for test and inspection procedure see ORNL CF-50-10-137); 90% joint efficiency; pickled and passivated
Fabricator	Alloy Fabricators, Perth Amboy, N.J.; Dwg. Nos. A-1257-A3 and A4
Purchase data	Requisition 542-458-A-C2, Bechtel P.O. 1699-OR-10A
Costs (each tank)	Materials $ 6,248 Fabrication 4,534 Total $10,782 (exclusive of piping and installation)

DWG. 20125

[redacted]

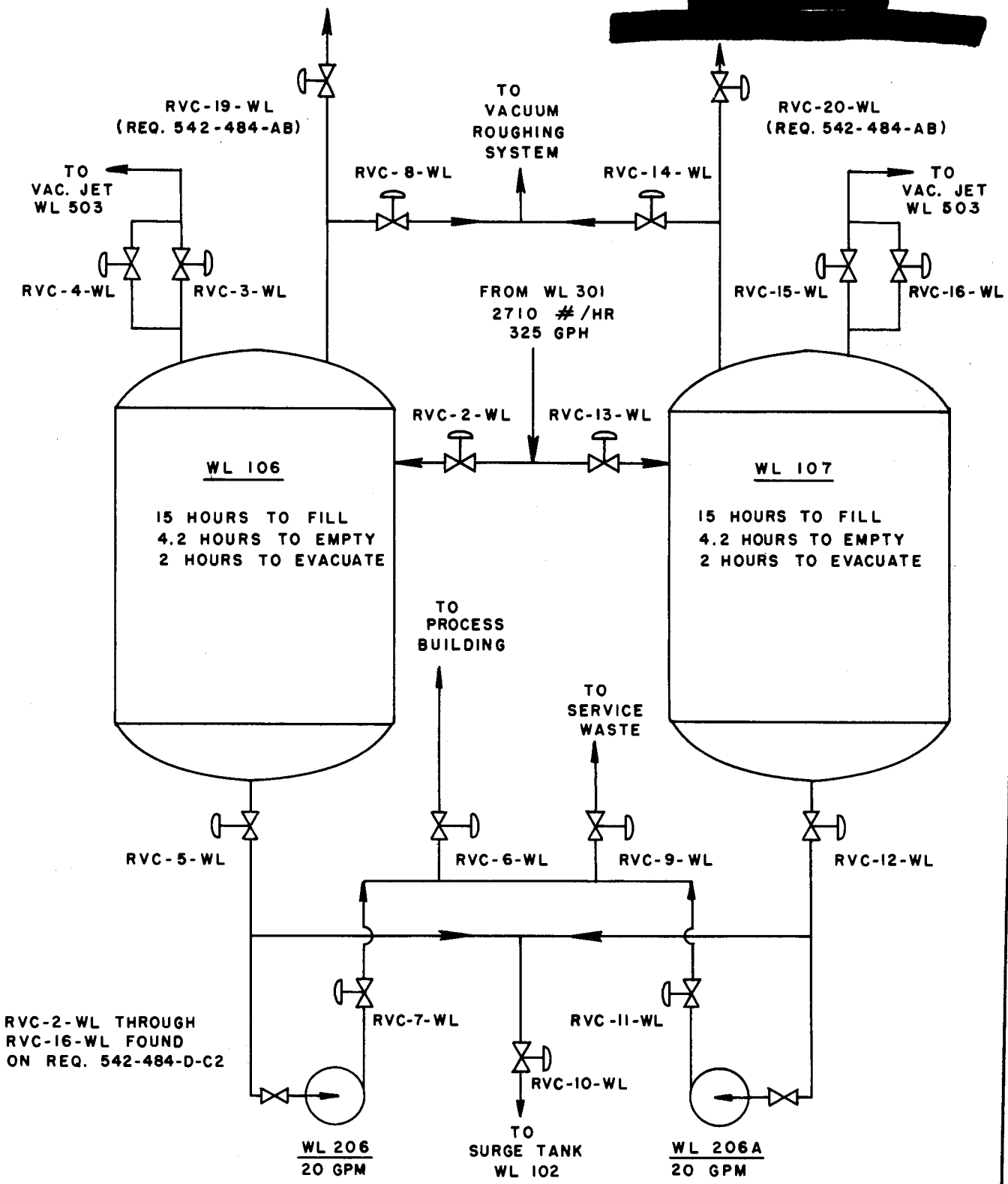

FIGURE 30

FLOW THROUGH CONDENSATE RECEIVERS

(1) Inlet, Vacuum, Vent, and Drain Lines. Each receiver has a 3-in. flanged inlet line in the side near the top, through which the condensate from condenser WL 301 enters. Each inlet line is equipped with a 3-in. RVC operated from an air switch on the graphic panel board. Usually one receiver is being filled while the other is emptying or being evacuated, so one inlet valve is usually closed and one open. After a receiver is filled, a sample is drawn from it for radioactivity analysis, which determines the disposition of the condensate. During vacuum operation it is necessary to relieve the vacuum to sample the tank and to empty it.

Each receiver is connected to the common 3-in. stainless steel line to the vacuum jet (WL 503) through a 2-in. RVC operated from the graphic panel. This RVC on each tank is normally open only when the tank is filling during vacuum operation. During atmospheric evaporation each tank is vented to the atmosphere through its own 1-1/2-in. stainless steel line and 1-1/2-in. RVC. The vacuum RVC for each tank has a by-pass around it containing a 1/2-in. RVC, which is opened during evacuation of the tank for gradual removal of air to prevent damaging the vacuum in the remainder of the evaporator system. Each tank has a connection through a 3-in. RVC to the vacuum roughing system, which supplies high air removal capacity for drawing a rough vacuum on the receivers.

A 3-in. flanged drain in the bottom of each tank connects the receivers to pumps WL 206 and WL 206A, which transfer the condensate to the service waste header or to the Process Building. Each tank has a 3-in. RVC in its drain. Downstream from these tank RVC's but upstream from the pumps, a 2-in. stainless steel line drains the tanks by gravity to evaporator surge tank WL 102. This line contains a 2-in. RVC operated from the graphic panel like all the others. This line is used only when a batch of condensate is too radioactive to be discharged or during decontamination of the receivers.

(2) Instruments. Liquid level in the receivers is recorded by LRA-4-WL for WL 106 and by LRA-5-WL for WL 107. Indicator dials and alarm lights for the two tanks are provided on the graphic panel board. The dip tubes for the pneumatic level instruments are mounted through 3-in. flanged nozzles in the tank tops.

The temperature in the receivers is indicated by points TI-1-44-WL for WL 106 and TI-1-45-WL for WL 107 on the 48-point Brown instrument on the panel board. The thermowells for these TI's are mounted in 1/2-in. welded nozzles extending 12 in. into the tanks from the sides near the bottom.

Vacuum in the receivers is indicated by dials PI-18-WL for WL 106 and PI-18-WL for WL 107 on the graphic panel board. These gauges are Bourdon-tube type and are supplied with an air purge from Brooksmite rotameters on the panel board. Each tank also has a pressure-vacuum gauge mounted on top.

(3) Samplers WL 606 and WL 607. Each receiver has an unshielded sampler mounted in the operating corridor, since the radioactivity in the condensate should be low at all times. These samplers are described fully in Sect. 8.2. In addition to the remote samplers, each tank has a 1/2-in. welded nozzle and valve in its side for drawing samples directly.

m. Pumps WL 206 and 206A. The P.E.W. condensate is transferred from the Waste Disposal Building by pumps WL 206 and WL 206A mounted on the cell floor under the receivers. Each pump has a hand operated valve in its suction line and an RVC in its discharge line to permit isolation of either or both pumps. The pumps can be operated singly or simultaneously, but the discharge valve of the pump not operating should be kept closed to prevent recirculation through it. Pressure gauges in the pump discharge lines indicate performance. Table 26 gives the design data for the pumps.

n. Vacuum Roughing Tank WL 100 and Pump WL 207. To provide a service vacuum system for the Waste Disposal Building and a means of rapidly evacuating the evaporator receivers, the vacuum roughing system, consisting of surge tank WL 100, pump WL 207, and a 3-in. header connecting these to the cells, has been provided. The tank and pump are located in the vessel off-gas blower cell. Table 27 gives the design data for the tank and pump.

o. Evaporator Vacuum System.

(1) Vacuum Jet WL 503. Exhauster WL 503 draws a vacuum on the evaporator system during vacuum evaporation by removing noncondensable gases from the system. The exhauster, a Foster Wheeler, size D (Purchase Requisition 542-434F), is stainless steel, having 2-1/2-in. flanged suction and discharge nozzles and a 3/4-in. screwed connection for its steam supply. The exhauster operates on high-pressure steam (115 to 135 psig) and is designed to handle 30 lb of air plus 20 lb of water vapor per hour at 100°F. The steam supply line is a 1-in. line, which is stainless steel downstream from a strainer and pressure gauge in the operating corridor, while the control valve and line upstream from the strainer are carbon steel. This jet can evacuate the evaporator system to 96 mm Hg absolute pressure. The jet operates at full capacity at all times

Table 26

Design Data for Condensate Pumps WL 206 and WL 206A

Description	Worthington type 3/4 CG-1 horizontal centrifugal; 1-in IPS suction, 3/4-in. IPS discharge, threaded
Materials of construction	Worthite for all parts in contact with fluid pumped
Capacity	20 gal per minute at 32.5 psig discharge pressure, no suction pressure; design head 74 ft, 27.5 ft available N.P.S.H.; 0.32 hydraulic hp, 1.4 bhp; pumped fluid temperature 120°F; sp. gr. 0.990
Motors	2 hp, 3600 rpm, 3 phase, 60 cycle, 440 volt, splash proof, type FX, class E, Code J, 50°C temperature rise
Fabricator and vendor	Worthington Pump & Machinery Co., New York
Purchase data	Requisition 542-470-A, Bechtel P.O. 1699-OR-542-470-A
Cost for two pumps	$640 (exclusive of piping and installation)

Table 27

Design Data for Vacuum Roughing Tank WL 100 and Pump WL 207

Tank function	To provide surge capacity and to remove solid and liquid particles from the evacuated air before it reaches the vacuum pump
Tank description	Vertical cylindrical tank 24 in. o.d., 48 in. long, with dished ends, supported on legs; perforated plate and wire mesh strainer mounted inside between air inlet and outlet
Pump description	Nash Hytor, size AL-673; motor 1750 rpm, 3 hp, induction type, 60 cycle, 3 phase, 440 volt, drip-proof

Materials of construction	Tank shell, ends, nozzles, and internals, type 347 stainless steel; tank mesh filter, type 304 stainless steel; pump body, iron; rotor, lobe and port plate, and shaft sleeve, bronze; shaft, mild steel
Capacity	Tank: 100 gal Pump: 30 cfm at 25 in. Hg vacuum, moving air at 85°F, 2.6 bhp
Design pressure	Tank: full vacuum (23 in. Hg)
Design temperature	Tank: 100°F
Operating pressure	Tank: full vacuum
Operating temperature	Tank: 100°F
Construction data	Tank: pickled and passivated, all welds full penetration, shell welds radiographed, joint efficiency 90%, no stress relieving by heat treatment (for testing and inspection procedure see ORNL CF-50-10-137)
Fabricators	Tank: W. K. Mitchell & Co., Inc., Philadelphia, Dwg. No. E-51-1471-A, three sheets Pump: Nash Engineering Co., South Norwalk, Conn.
Purchase data	Tank: requisition 542-458-G-C1, Bechtel P.O. 1699-OR-109 Pump: requisition 542-573-E-C1, Bechtel P.O. 1699-OR-97
Costs	Tank: $1,475 (total excluding piping and installation) Pump: $595 (total excluding piping and installation)

during vacuum evaporation. The vacuum in the evaporator system is regulated by bleeding air and steam from the WL 503 discharge line into its own suction line through a valve controlled by APIC-2-WL (described on p. 102). Figure 31 shows the flows through the evaporator vacuum system.

The 3-in. stainless steel suction line of the exhauster connects to the vacuum nozzles in the tops of receivers WL 106 and WL 107. A 1-in. line from the tubes of condenser WL 300 and a 1-in. line from steam condensate collection tank WL 115 and the reboiler WL 300 shell connect to the 3-in. exhauster suction line. The exhauster discharges to condenser WL 302 through a 6-in. stainless steel line. The jet is supported by its piping near the ceiling above receiver WL 107 on the east side of the separation and condensation cell.

(2) Exhauster Condenser WL 302. The steam and noncondensable gases from steam jet exhauster WL 503 pass to condenser WL 302, entering it through a 6-in. flanged nozzle near the top. The steam is condensed as it passes downward through the tubes, draining through a 1-1/2-in. flanged bottom nozzle to separator tank WL 108. Cooling water enters the condenser shell through a 3-in. flanged nozzle near the bottom of the side and leaves through a 3-in. flanged nozzle near the top of the side. Baffles in the shell distribute the water over the tubes as it rises through the condenser. The cooling water discharge line connects to the service waste header in the pipe corridor. Table 28 lists the design data for the condenser.

(3) Separator Tank WL 108. Separator tank WL 108 suspended on brackets from the cell wall, receives the steam jet exhauster condensate and noncondensable gases from WL 302 through a 2-in. flanged nozzle in the top of the vessel. The gases are vented to the vessel off-gas header in the pipe corridor through a 1-in. welded nozzle in the top of WL 108 and a 1-in. stainless steel line. The condensate normally drains by gravity from a 1-1/2-in. flanged nozzle in the bottom of WL 108 through a 1-1/2-in. stainless steel line to the service waste header in the pipe corridor. A 1-1/2-in. stainless steel gravity drain line connects the WL 108 drain to the 2-in. line from WL 106 and WL 107 to WL 102. By means of this line the condensate can be sent to WL 102 when the monitor indicates that radioactivity is being carried over to WL 503 and to WL 106 and WL 107. The flow is diverted by means of a 1-1/2-in. remotely operated valve (RVC-17-WL) in the line to service waste and a 1-in. remotely operated valve (RVC-18-WL) in the line to WL 102. These valves are operated simultaneously from a single switch on the graphic panel board in the operating corridor. RVC-17-WL is a normally open valve, air pressure being required to close it, while RVC-18-WL is a normally closed valve and opens by means of air pressure.

DWG. 20165

[redacted]

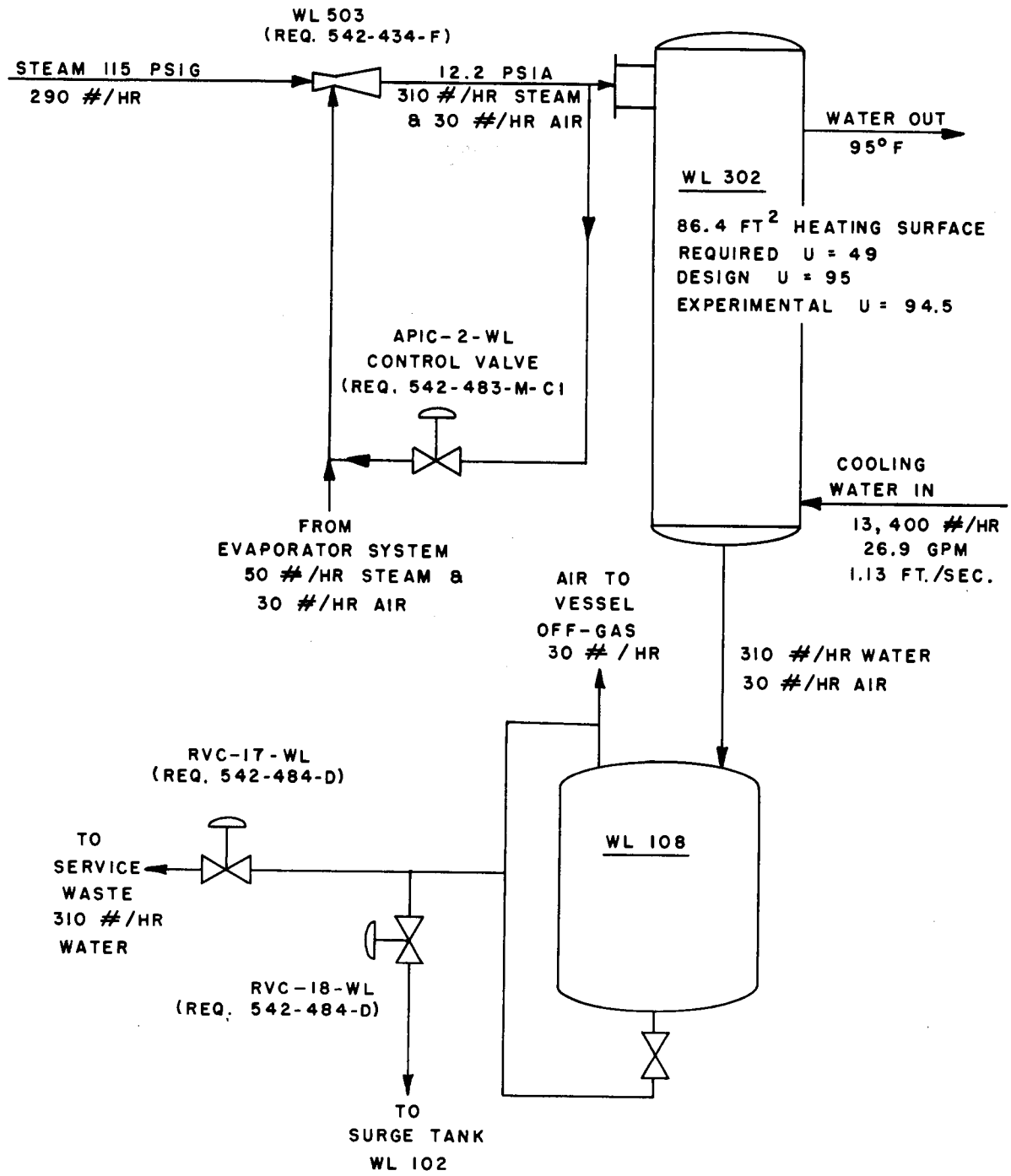

FIGURE 31

FLOW THROUGH VACUUM JET SYSTEM

Table 28

Design Data for After-condenser WL 302

Description	Vertical cylindrical shell-and-tube heat exchanger with dished ends
Dimensions	Overall length, 9 ft 11 in.; o.d., 8-5/8 in.; o.d. of expasnion section, 18 in.
Tubes	55 tubes on 15/16-in. triangular pitch; 3/4 in. o.d., 16 BWG, 8 ft 1 in. long; total heat transfer surface 86.4 ft^2
Baffles	13 segmental type, spaced 6-3/4 in. apart
Duty	Designed to condense 462 lb of steam per hour entering with 30 lb of air per hour at 12.2 psia pressure and 200°F and leaving at 92°F with no pressure drop through tubes
Water	13,400 lb per hour (27 gal per minute), entering at 55°F and leaving at 95°F at 80 psig pressure with a 2-psig pressure drop through the condenser shell
Material of construction	Shell and tubes, type 347 stainless steel; all welded externals and internals, type 347 stainless steel
Design pressure	Shell 120 psig; tubes full vacuum and 25 psig
Design temperature	Shell 250°F; tubes 250°F
Test pressure	Shell 180 psig; tubes 38 psig
Construction data	All longitudinal and girth welds full penetration and radiographed; pickled and passivated, no stress relief by heat treatment (for testing and inspection procedure see ORNL CF-50-10-137)

Fabricator	Downingtown Iron Works, Downingtown, Pa., Dwg. No. 1309-D-1, order R-3212
Purchase data	Requisition 542-445-D, vessel sketch FWV-94, Bechtel P.O. 1699-OR-16-B
Cost	Materials $1,117 Fabrication 1,160 Total $2,277

About 57 gal of condensate is normally held in WL 108 because the drain line has a loop, which rises to a point opposite the middle of the tank. This arrangement provides holdup capacity to permit periodic sampling of the condensate. The loop is vented to a nozzle in the tank top to prevent syphoning. The tank can be emptied to WL 102 by opening a hand-operated valve in a 1-1/2-in. bypass around the loop. All the top nozzles are mounted in the lid of an 18-in. manhole in the top of the vessel provided for access to the internals.

WL 108 is equipped with a sampler (WL 608) located in sample gallery No. 3 in the operating corridor. Samplers are described fully in Sect. 8.2. The tank can also be sampled locally by means of a 1/2-in. nozzle and valve in the side. The temperature of the condensate in WL 108 is indicated by point TI-1-46-WL on the Brown temperature indicator on the panel board. The thermowell for the temperature indicator extends into WL 108 through a 3-in. flanged nozzle in the top. Table 29 gives the design data for the tank.

Table 29

Design Data for Separator Tank WL 108

Description	Vertical cylindrical tank with dished ends
Dimensions	Shell length, 2 ft 8 in.; o.d., 2 ft 6 in.; overall length, 5 ft 2 in.
Materials of construction	Shell and ends, type 347 stainless steel; bolting, type 304 stainless steel; gaskets, teflon and Chemseal No. 7
Design pressure	Vacuum and 25 psig
Design temperature	250°F
Operating pressure	Vacuum and atmospheric
Operating temperature	200°F
Construction data	No corrosion allowance, radiograph all butt welds, pickle and passivate, all welds full penetration no heat treatment, 90% joint efficiency (for testing and inspection procedure see ORNL CF-50-10-137)
Fabricator	W. K. Mitchell & Co., Inc., Philadelphia, Pa., Dwg. No. E-51-687-B, four sheets (job No. 168)
Purchase data	Requisition 542-458-B, Bechtel P.O. 1699-OR-13-A
Costs	Materials $1,134 Fabrication 1,511 Total $2,645

6.0 CELL FLOOR DRAIN WASTE

6.1 Composition and Flow Rates

Cell floor drain waste (C.F.D.) contains no radioactivity except during cell decontamination periods or in the event that "hot" samples have been dumped into "cold" sinks in the laboratories.

Flow rates for C.F.D. cannot be very closely predicted and are not of too much importance because the waste is ordinarily discharged directly to the service waste well for disposal.

6.2 Sources

The sources of cell floor drain waste are the "cold" laboratory sinks and emergency showers in Laboratory Building CPP 602, the drains from the CPP 602 product preparation area, the drains from the CPP 602 vacuum tanks, the CPP 601 cell floor drains, and the floor drains in the CPP 601 sample corridors, vent corridors, and service corridor. The CPP 601 cell floor drains are normally kept closed by remotely operated valves, which are opened by air switches on the cell panel boards in the CPP 601 operating corridor. Figure 32 shows all the sources and the arrangement for handling cell floor drain waste.

6.3 Handling and Equipment Description

6.3.1 Description of Process

The collection of C.F.D. waste is very similar to the collection of P.E.W. described in detail in Sect. 5.5. From the sources listed above, C.F.D. waste drains by gravity through a header to two stainless steel collection tanks (WG 100 and WH 101) located in separate cells at the extreme south end of Process Building CPP 601. This C.F.D. header terminates in a diversion box (WH 120), which permits the waste to flow to one collection tank while the other is isolated for sampling. Each tank of C.F.D. waste must be sampled to determine its radioactivity because the handling procedure for C.F.D. after collection is dictated by the radioactivity in the waste.

From collection tanks WG 100 and WH 101 the C.F.D. waste is transferred by pumps WB 200 and WE 200 either to the service waste header in the CPP 601 service corridor or to the P.E.W. evaporator feed surge tank WL 102 in CPP 604. Normally the C.F.D. waste is nonradioactive and is discharged to service waste. When the radioactivity exceeds a prescribed limit, however, it must be transferred to the process equipment waste system for concentration and storage. Figure 22, p. 71, shows the arrangement of the collection facilities for both these systems.

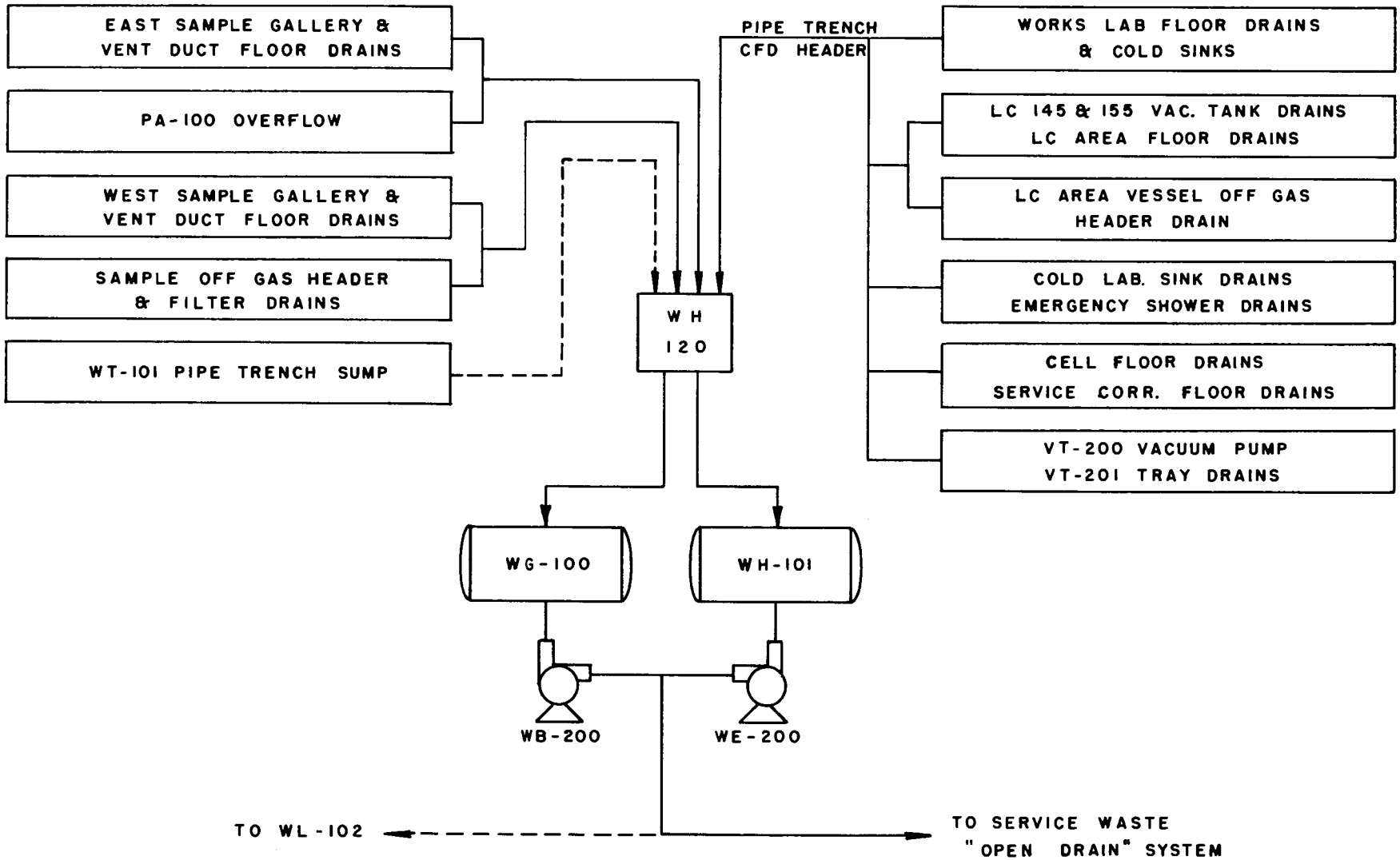

FIGURE 32

SOURCES OF CELL FLOOR DRAIN WASTE (CFD)

[redacted] DWG. 20166

6.3.2 Details of Waste Handling Equipment

a. C.F.D. Header in CPP 602 and CPP 601. The "cold" sinks (stainless steel slop sinks, porcelain wash sinks, and certain stainless steel cup sinks in hoods) in the CPP 602 laboratories drain to 2-in. lead lines, which extend east and west under the laboratory racks. In the first floor laboratories these lead lines slope toward pipe chases along the north-south center line of the building. In these chases the lead pipes connect to 2-in. galvanized pipe lines, which also serve the floor drains under emergency showers in the laboratories. Groups of these 2-in. lines join 4-in. cast iron risers, which drop to the 4-in. cast iron C.F.D. header in a trench under the basement floor. The 2-in. lines from the Works Laboratory nonradioactive sinks in the CPP 602 basement drop below the floor to a 4-in. cast iron header, which slopes to the C.F.D. header in the trench.

The trench for the C.F.D. header also contains the P.E.W. header and extends the full length of CPP 602. The trench is neither lighted nor ventilated, but it is accessible through hatches in the basement floor. The C.F.D. header is vented to the atmosphere at its north end by means of a 4-in. cast iron breather line extending through the CPP 602 roof. Three 4-in. cleanouts are provided along the length of the header, which slopes from north to south.

At the south end of CPP 602 the 4-in. cast iron header becomes 6-in. stainless steel and drops 16 ft before passing through the wall into the pipe trench under the CPP 601 access corridor. The header is anchored in this wall but is free to expand on either side of the wall. The header increases in size to 6-in. stainless steel pipe just before passing through the wall. A 12-in.-deep trap had to be installed in the stainless steel line to eliminate high air flow in the header.

The CPP 601 cell floor drains, which are all 3-in. stainless steel pipe, join the 6-in. C.F.D. header in the pipe trench (WT area). This trench also contains the P.E.W. header (described in Sect. 5.5) and extends the full length of CPP 601. The pipe trench is neither lighted nor ventilated, but it is accessible through hatches in the access corridor floor. For ease in decontaminating, the pipe trench floor is lined with stainless steel and can be flushed with water by means of 1/2-in. lines aimed at the floor. The valves in the flushing lines are located in the access corridor. At its south end the pipe trench floor, sloping from north to south, is provided with a sump (WT-101) 5 in. in diameter by 1 ft deep. This sump also serves the access corridor, which has a 3-in. drain to it from the south

end of the corridor. A level indicator-alarm (LIA-1-WT) for this sump warns on panel board H in control room WA when liquid collects in the pipe trench, and any liquid in the sump can be sampled by means of sampler WT 600 in control room WA. Two jets are provided to empty sump WT 101, one jet discharging to P.E.W. tank WG 101 for use when the sump contents are "hot," and the other to C.F.D. tank WG 100 for use when the sump contents are "cold." The control valves for both jets are in control room WA.

The C.F.D. header passes through a sleeve in the south wall of the pipe trench into collection tank cell WH and terminates in diversion box WH 120. The header is fastened to the diversion box through a stainless steel bellows to permit expansion of the header without air leakage into the system. The diversion box provides a means of directing the C.F.D. flow to collection tank WG 100 or to tank WH 101 by a movable transfer box inside operated by a handle extending through the WH cell ceiling into control room WF. A pointer on the handle in control room WG indicates to which collection tank the C.F.D. flow is directed. The 3-in. lines from the sample corridors and the vent corridors on either side of CPP 601 join and connect to the C.F.D. header just upstream from the diversion box. Two 6-in. stainless steel lines conduct the C.F.D. flow from the diversion box to tanks WG 100 and WH 101.

b. C.F.D. Collection Tanks WG 100 and WH 101. The C.F.D. collection tanks are identical with the P.E.W. collection tanks, which have been described in Sect. 5.5.2 and in Sect. 2.2. Figure 22, p. 71, diagrams the arrangement and Fig. 3, p. 9, shows the actual arrangement of all these collection tanks. All details and references for the P.E.W. tanks and their auxiliaries apply to the C.F.D. tanks.

7.0 SERVICE WASTE

7.1 General Description

The service waste system handles the nonradioactive industrial wastes (exclusive of sanitary waste) from the Chemical Processing Plant. These wastes originate mainly from the plant services, e.g., cooling water and steam condensate, but they also include the waste water from washing floors and vessels in "cold" areas of CPP 601, CPP 602, CPP 604, CPP 605, and CPP 606. The Process Equipment Waste (P.E.W.) condensate from the waste evaporator in CPP 604 is normally sent to service waste unless the radioactivity level of the P.E.W. condensate is too high. The total flow of service waste is approximately 1.5 million gallons per day.

The service waste system is divided into four streams which serve different areas. These streams, which flow by gravity, are: the open drain system in CPP 601; the closed drain system in CPP 601 and CPP 602; the service waste system in CPP 604 and CPP 605; and the service waste system in CPP 606. These streams are described in detail below. Figure 33 shows the arrangement of these streams.

Although no treatment is given to any of the service waste streams, they flow together, and all but the stream from CPP 606 are monitored continuously for radioactivity as they flow to the service waste Disposal Well, CPP 304. The service waste Monitoring Station, CPP 709, is described in detail below. The Disposal Well which is located approximately 500 ft south of the south end of CPP 601 and 100 ft east of the road to CPP 603 (see Fig. 1, p. 5, and Fig. 41, p. 14), conducts the waste to the underground stream flowing several hundred feet below the CPP area. The service waste stream flows by gravity from the Monitoring Station to the Disposal Well through a 24-in. concrete pipe line buried approximately 18 ft below ground level. This line enters the upper portion of an 8-ft-square concrete chamber surrounding the top of the well casing. A 4-ft-diameter manhole rises to ground level above the concrete chamber.

7.2 Service Waste Reference Drawings

The following drawings show the details and arrangement of the service waste system and its component streams:

Engineering flowsheets

CPP 601	Service Waste Flow Diagram	542-11-P1276

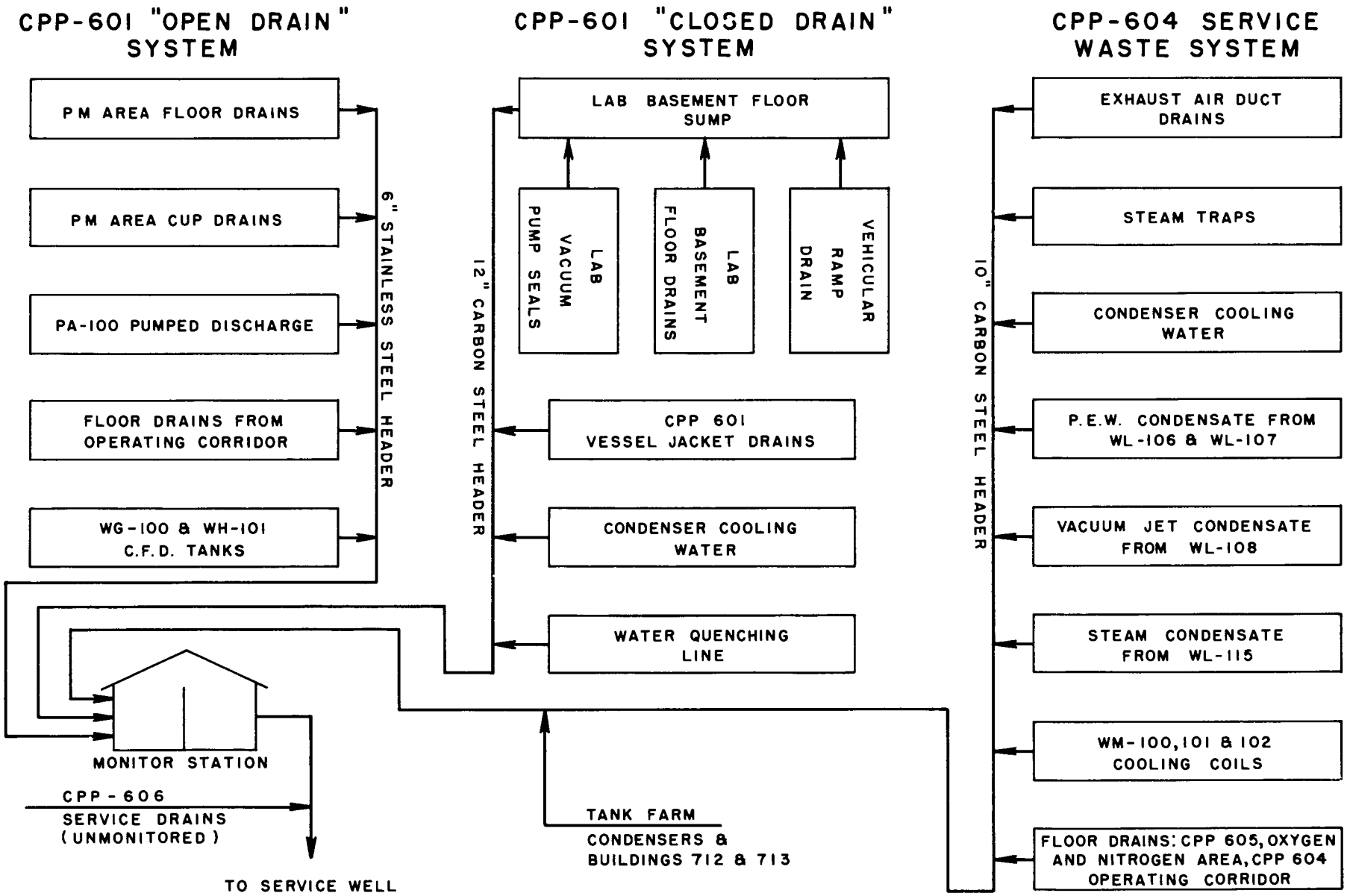

FIGURE 33
SERVICE WASTE HEADERS (SOURCES)

[redacted] DWG. 18604

CPP 604	Drain and Service Waste Flowsheet	542-41-P781
CPP 709	Monitoring Station Sampling Diagram	ORNL-Q-1167-20
CPP 709	Monitoring Station Sampling Flowsheet	ORNL-Q-1167-25

Piping drawings

CPP 602	Floor Drain Piping in Basement	542-21-P701
CPP 602	Service Drain Piping Sections	542-21-P711
CPP 602	Utility Piping Sections	542-21-P713
CPP 601	Floor Drains Makeup Area and Operating Corridor	542-11-P137
CPP 601	Service Waste Drain Lines	542-11-P138
Yard	Process Building to and at Evaporator Building	542-41-P746
Yard	Evaporator Building and Waste Tank Farm	542-41-P750
Yard	Service Building Drain Line	542-61-P1241
Yard	Service Building Drain Line	542-61-P180
Yard	Disposal Well	542-61-P30
CPP 606	Underground Drainage System	542-61-P188
CPP 604	Drain and Service Waste Layout	542-41-P764
CPP 604	Pipe Corridor	542-41-P896
CPP 604	Pipe Corridor	542-41-P897
CPP 709	Piping Elevation and Sections	ORNL-Q-1167-31

7.3 Open Drain System in CPP 601

The open drain system serves open floor drains and vessel funnel drains in the CPP 601 makeup (PM) area and operating corriodr. The 3-in. stainless steel line from cell floor drain (C.F.D.) waste pumps WB 200 and WE 200 also connects to this system. All the drains in the open drain system are stainless steel, and they connect through 3-in. stainless steel risers to a 6-in. stainless steel header in the CPP 601 service corridor. The system is constructed of stainless steel because it must handle acids from the makeup area and C.F.D. waste.

The 6-in. header (labeled "Floor Drain Line No. 4" on some construction drawings) is suspended from the east side of the ceiling along the entire length of the service corridor, sloping from both ends downward toward the middle. The header leaves CPP 601 between cells P and Q, passing through the east wall to the yard. In the yard the open drain header is buried underground and becomes 8-in., schedule 10, stainless steel pipe. It slopes through the yard to the service waste Monitoring Station, CPP 709, which it enters from the north. A small weir compartment in the northwest corner of the Monitoring Station lower chamber permits sampling the flow in the open drain system before it mixes with the other service waste streams.

7.4 Closed Drain System in CPP 601 and CPP 602

The closed drain system handles mainly steam condensate and used cooling water from vessel jackets and air heaters in CPP 601 and CPP 602. The basement floor drains in CPP 602 are also served by this system. These 3-in. carbon steel floor drains (including the drain for the vehicular ramp) connect to 4-in. cast iron headers, which slope under the basement floor to a sump at the south end of the basement. Near the sump a running trap with cleanout connections prevents vapors from the sump from backing up the headers to the floor drains. The sump is vented to the roof of CPP 604 through a 3-in. line. Steam condensate from air heaters in CPP 602 flows to the sump from flash tanks nearby. Two submerged pumps actuated by float switches transfer the waste from the sump through a 3-in. carbon steel line to the closed drain header in the CPP 601 service corridor.

The closed drain header (labeled "Service Waste Drain Line No. 3" on some drawings) is a 12-in. carbon steel line suspended from the east side of the ceiling along the entire length of the CPP 601 service corridor. It is located about 1 ft below the open drain header and slopes from both ends downward toward the middle. Figure 2, p. 7, shows the arrangement of these headers. Lines carrying steam condensate and discharged cooling water from CPP 601 vessels and from steam and air supply header traps and drains connect to the top side of this header. A cold water line connects through the bottom side of the header to quench any steam in the waste and to cool the waste. This arrangement is designed to minimize sweating in the instrument chamber of the service waste Monitoring Station caused by too high temperature of the waste, especially in severely cold weather. A valve on the east side of the CPP 601 operating corridor controls the quenching water flow.

The closed drain header leaves CPP 601 between cells P and Q, passing through the east wall under the 6-in. open drain header to the yard. The line, buried underground in the yard,slopes toward the service waste Monitoring Station, CPP 709, which it enters from the north. A small weir compartment in the center of the north end of the Monitoring Station lower chamber permits sampling the flow in the closed drain system before it mixes with the other service waste streams.

7.5 Service Waste System in CPP 604 and CPP 605

The service waste system in CPP 604 handles steam condensate and used cooling water from vessel jackets, heat exchangers, and air heaters plus waste from floor drains in the oxygen-nitrogen area, the CPP 604 operating corridor, and CPP 605. The seal water for vacuum roughing pump WL 207 drains to service waste by gravity, and condensate

from evaporation of process equipment waste is pumped to service waste when the P.E.W. condensate radioactivity level is low.

All service waste in CPP 604 flows to the 10-in. carbon steel service waste header, which is suspended from the ceiling along the entire length of the pipe corridor and which extends under the floor of CPP 605 almost to the south end of the building. The header slopes downward from south to north, leaving CPP 604 at the north end of the pipe corridor. The line is buried underground in the yard, sloping from east to west as it leads to the service waste Monitoring Station, CPP 709, which it enters from the east. Near CPP 604 the underground lines carrying cooling water discharged from Tank Farm condensers WM 300, WM 301,and WM 302 and serving Instrument House CPP 712 join the service waste header. A small weir compartment in the northeast corner of the Monitoring Station lower chamber permits the CPP 604 and CPP 605 service waste stream to be sampled before it mixes with the other service waste streams.

7.6 Service Waste System in CPP 606

The service waste system in CPP 606 handles all liquid waste from the building except sanitary waste. The main sources of waste are cooling and seal water from pumps, compressors, gasoline engines, and heat exchangers plus steam condensate from air heaters and the boiler blowdown drums. Floor drains located at convenient points in the building connect to 4-in. and 6-in. cast iron lines which drain to an 8-in. cast iron header sloping from west to east under the floor. This header leaves CPP 606 under the east side, becoming 12-in. concrete pipe in the yard and sloping to a manhole approximately 100 ft east of CPP 606. A weir has been constructed in this manhole to form a trap by partly flooding the 12-in. concrete line. This seals the line to prevent steam from reaching the Monitoring Station. From this manhole the line slopes from north to south underground to another manhole approximately 50 ft east of the service waste Monitoring Station, CPP 709. The line enters the Monitoring Station on the east side of the lower chamber downstream from the main weir. The CPP 606 service waste stream is not monitored for radioactivity because no radioactivity is handled in CPP 606. The stream is accessible for sampling in the Monitoring Station.

7.7 Service Waste Monitoring Station, CPP 709 (See Fig. 34)

The service waste Monitoring Station has been provided to measure continuously the radioactivity and the flow of service waste water leaving the processing area of the CPP. The combined streams of service waste from CPP 601, CPP 602, CPP 604, and CPP 605 are monitored

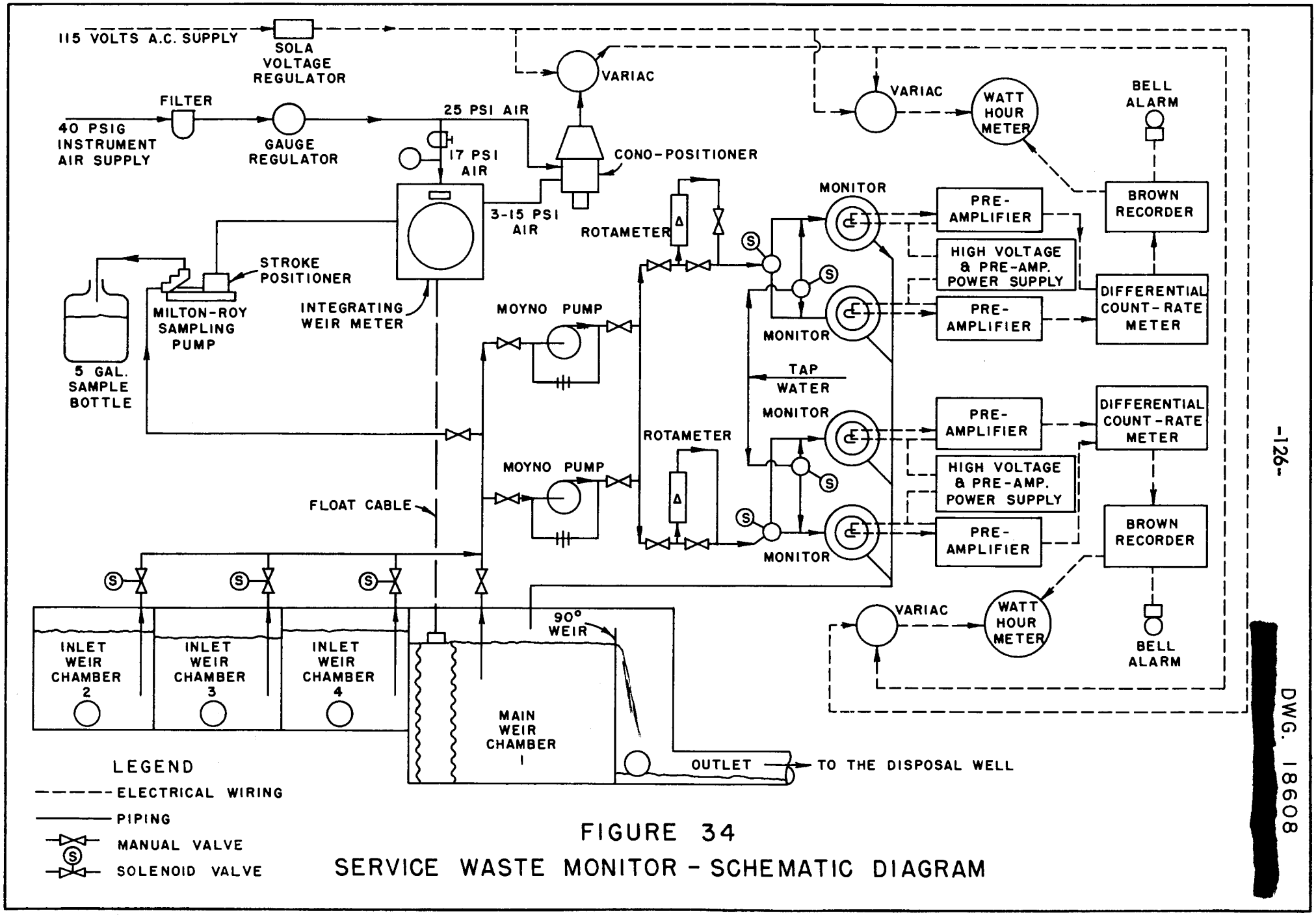

FIGURE 34
SERVICE WASTE MONITOR - SCHEMATIC DIAGRAM

DWG. 18608

in the station, which is located between CPP 601 and CPP 604. The concrete building, which is 18 ft 8 in. by 11 ft 8 in., consists of two chambers, one above the other, both underground. The upper chamber houses the metering and monitoring equipment, and the lower chamber contains a weir, over which the waste water flows. The waste streams to be monitored enter the Monitoring Station through small weir compartments in the north end of the lower chamber before spilling into the main weir chamber. A removable lattice baffle across the center of the lower chamber quiets the flow and increases the accuracy of flow measurement over the weir. The service waste stream from CPP 606 enters the lower chamber downstream from the main weir and is not normally metered or monitored for activity. The entire service waste stream leaves the Monitoring Station through a 24-in. concrete pipe in the south end of the lower chamber, from which it flows to the Disposal Well.

A Milton Roy, Model MM1-B-58, pump continuously samples the waste flowing through the Monitoring Station, the output of the pump being at all times proportional to the flow of waste. With a maximum capacity of 450 ml/hr, the pump discharges into a 5-gal sample bottle, accumulating a composite sample representative of the waste which passed through the station while the sample was being collected. An aliquot of the composite should be taken every eight hours and a fresh sample bottle supplied. The radioactivity in the waste is determined by evaporating the aliquot to dryness and counting it in the laboratory. Because this method is considered the most reliable, the laboratory analysis is used to calibrate the continuous monitoring equipment in the Monitoring Station and to keep a close check on its performance. The small pump has caused some trouble by becoming plugged. Daily inspection and care of the system are required to assure continuous performance.

The continuous monitoring and metering equipment is designed to: (1) detect radioactivity in the waste and to sound an alarm when the activity level reaches 2×10^{-5} microcurie/ml, (2) indicate and record continuously the level of radioactivity in the waste flowing through the station, (3) indicate on an integrating watt-hour meter the total quantity of radioactivity that has passed through the station, and (4) indicate and record continuously the flow rate, integrating the total waste flow. The main components of this system are two constant-flow water monitors, their preamplifiers, a two-channel (differential) counting-rate meter, a Brown recorder, an alarm bell, a watt-hour meter, an integrating and recording weir meter, and a pneumatically controlled Variac. Essential auxiliary equipment consists of a waste water supply pump for the water monitor, a timer and solenoid valve, and rotameters and manual valves to control the flow of waste water through the

monitors. The entire system is constructed in duplicate to provide a spare when one set of equipment is under repair.

The service waste monitor is designed around the constant-flow water monitor, which because of its geometry gives high counting efficiency without counter tube contamination. A stream of waste water is continuously injected by the pump into the water cell tangential to its inner periphery, which shapes the stream into a cylinder surrounding but not touching the counter tube. The tube thus remains dry and uncontaminated by radioactivity, which tends to plate out on any surface it contacts. A background tends to build up on the surfaces of the water cell because of this. Figure 35 illustrates the constant-flow water monitor with its shielding and counter tube. The shielding protects the counter tube from outside radiation and is not intended to shield the Monitoring Station from radioactivity in the waste. The waste water drains back to the main weir chamber after passing through the monitoring cell.

One of the important features of the service waste monitor is its ability to discriminate between background built up in the water cell and radioactivity detected in the waste. This is accomplished by employing two constant-flow monitors, one of which counts the radioactivity level in the waste water while the other monitors only tap water. At regular intervals the roles of the two cells are alternated, causing each cell to monitor waste about half the time and allowing it to be flushed with tap water the other half. Switching of the flow from one cell to the other is effected by a timer, which actuates two three-way solenoid valves in the supply lines to the cells. This arrangement permits background activity to build up on both cells at an equal rate. The electrical impulses from the counter tubes in the two cells, after being preamplified, are fed to the twin grids of a difference amplifier. The output from this stage is the difference between the two input voltages. Since the activity measured in the background monitor is subtracted from that measured in the cell monitoring waste, only the excess radioactivity level in the waste appears on the indicating and recording instruments.

An integrating weir meter is used to measure the rate of flow of the waste through the Monitoring Station and to provide a means of controlling the pumping rate of the proportional sampling pump, which collects the sample for laboratory analysis. The weir meter also pneumatically controls a "Cono-Positioner" unit which rotates a Variac whose output voltage is thus proportional to the waste flow. The output voltage from the Variac is fed through a similar Variac, which is controlled by the radioactivity counting rate. The output from the second Variac is thus proportional to both the waste flow rate and the

DWG. 18606

[redacted]

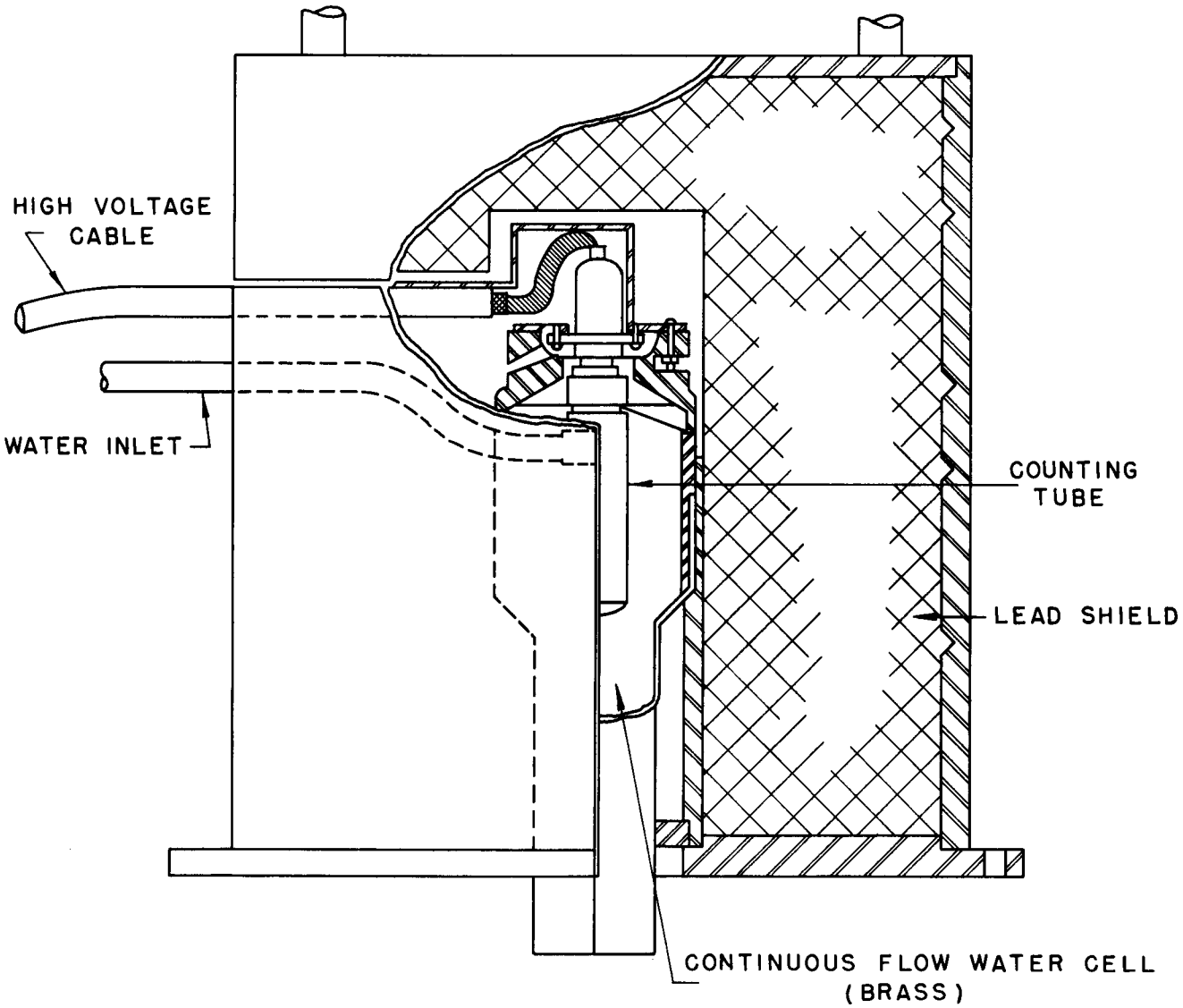

FIGURE 35

CONTINUOUS FLOW WATER MONITOR ASSEMBLY

radioactivity. This voltage is converted to current in a transformer and impressed upon a watt-hour meter supplied with constant voltage. This arrangement causes the watt-hour meter to read the total quantity of radioactivity that passes through the Monitoring Station.

The waste water is supplied to the constant-flow water monitors by means of a Moyno, Model 1L3, Type CDQ positive displacement pump driven by a belt and pulley from a 0.5-hp, 440-volt, 3-phase motor. The pump is capable of delivering 5 gal/min at 25 psig. A second, identical pump is piped in parallel with the supply pump to assure continuity of service during maintenance intervals. The flow through each water monitor is regulated by manual valves and rotameters calibrated from 1.0 to 5.6 liters/min at 18 psig. By-pass orifices around the positive displacement supply pumps permit the flow to be regulated by throttling valves. The optimum flow for the water monitors is 4.25 liters/min. These pumps caused some difficulty because of their rubber parts and also because of this positive displacement feature, which is undesirable in this installation. A submerged centrifugal pump would probably be more suitable.

When the radioactivity level in the service waste exceeds the prescribed limit, it may be desirable to monitor separately the waste flow into each of the inlet weir compartments at the north end of the Monitoring Station lower chamber. Valves are provided to permit the water monitor supply pumps to pick up waste from any one of the three compartments. In this way, the source of the radioactivity can be traced.

The electronic equipment for the system consists of two counting-rate meter chassis, one high-voltage power supply chassis, and one integrating meter chassis for the watt-hour meters. These four units are mounted in a 22- by 17- by 42-in. metal cabinet. The rear access door is equipped with an interlock switch, which shuts off the 115-volt input voltage to the four units when the door is opened. The two Brown recorders are mounted in a similar cabinet. The two cabinets rest side by side on a table in the center of the Monitoring Station upper chamber.

The four constant-flow water monitors are mounted over a drain trough in the stainless steel top of a table on the west side of the upper chamber. The two preamplifiers for the monitors are also mounted on this table. The solenoid valves for alternating the water monitors are mounted on the west wall over the table. The monitor supply pumps are mounted on the floor under this table, and the proportional sampling pump is mounted in the northwest corner beside

the table. At the south end of the monitor table is a metal panel board, in which the integrating weir meter, the rotameters, and the manual water flow valves are mounted.

Instruction manual Q-1167, Q-1270 prepared by the Instrumentation and Controls Division of Oak Ridge National Laboratory, whose personnel designed and constructed the service waste monitor, gives the details of the monitor. The following is a list of ORNL drawings giving the details and arrangements of the service waste monitor and its components:

Q-1167-1	through	1167-11
Q-1167-13	through	1167-15
Q-1167-18	through	1167-20
Q-1167-22	through	1167-29
Q-1167-31	through	1167-49

Of these drawings, the main ones of interest are:

Sampling System Diagram	Q-1167-20
Sampling System Flowsheet	Q-1167-25
Piping Elevation and Sections	Q-1167-31
Equipment Layout, Plan View	Q-1167-33
Equipment Layout, Sections	Q-1167-34

8.0 SUPPLEMENTARY FACILITIES

8.1 Leak-Detection System

A leak-detection system has been provided for all underground yard piping which handles radioactive liquid waste. The purpose of this system is to prevent the spread of radioactivity from a leaking underground pipe and to provide a ready means of locating leaks for quick repairs. Spreading of radioactivity from a leak is prevented by encasing each underground liquid waste pipe in 6-in. tile pipe. Leaks are located by means of sampling pots and boxes at convenient points along the lines. Repairs to underground waste lines are facilitated by having most lines 6 ft apart in the yard to provide earth shielding from adjacent radioactive lines for the workers excavating a leaking line.

There are five underground liquid waste lines between Process Building CPP 601 and the north end of Waste Disposal Building CPP 604. Two of these lines (from Y 140 to WL 101 and from U 129 and U 130 to WM 100) slope downward from the east side of CPP 601 to CPP 604. Any

leakage from these lines flows through the encasing tiles to sample boxes in the tank cells at the ends of the lines. The other three lines (from WG 100 and WH 101 to WL 102, from WG 101 to WL 102, and from WH 100 to WL 102) rise from the south end of CPP 601 to a high point in the yard east of CPP 601 and slope downward from this point to CPP 604. Any leakage from the CPP 601 end of these lines flows through the encasing tiles to sample pots in the pump cells at the south end of CPP 601. Any leakage from the CPP 604 side of the high point flows through the tiles to sample boxes in the east storage tank cell of CPP 604.

Five of the underground liquid waste lines in the yard between the CPP 604 collection tank cells and the Waste Tank Farm (from WM 100 to WM 180, from WM 101 to WM 180, from WM 102 to WM 180, and two lines from WL 101 to WM 181) are included in the leak-detection system. All the lines slope downward from WM 180 and WM 181 to CPP 604. Any leakage from them flows through the encasing tiles to sample boxes outside of the north wall of the CPP 604 collection tank cells.

The samplers connected to the leak detection sample boxes at CPP 604 are housed in sample galleries 1 and 2 in the CPP 604 sample corridor. Table 30 lists the leak-detection boxes in CPP 604, their locations, the process line each serves, and the sampler attached.

Samplers for the leak-detection sample pots in the CPP 601 pump cells are housed in sample galleries 12 and 13 in the CPP 601 waste collection area control rooms. Table 31 lists these pots, their locations, the process line each serves, and the sampler attached.

Two pots each are provided for the lines from pumps WC 200, WD 200, and WE 200 because elevation difficulties at the south end of CPP 601 made it necessary to divide the tile encasings for these lines into two sections, a lower section and an upper section. These sections appear in detail on Dwg. No. 542-41-P746 (not reproduced here).

The arrangement of the sample pots and boxes for leak detection is shown in Fig. 36. Any leakage into the tile surrounding a waste pipe line flows into the pot or box at the end of the line and overflows to a waste tank or to a cell sump. A sufficient quantity is retained in the pot or box to permit sampling.

Table 30

Leak-Detection Sample Boxes in CPP 604

Box No.	Location	Process Line	Sampler No.
1	East cell, west wall	From Y 140 to WL 101	WL 616
2	West cell, west wall	From U 129 to WM 100	WM 605
3	East cell, west wall	From WG 100 and WH 101 to WL 102	WL 614
4	East cell, west wall	From WG 101 to WL 102	WL 611
4a	East cell, west wall	From WH 100 to WL 102	WL 612
5	East cell, south wall	From jet WL 500 in WL 101 to WM 181	WL 618
6	East cell, south wall	From jet WL 505 in WL 101 to WM 181	WL 617
7	Middle cell, south wall	From jet WM 502 in WM 102 to WM 180	WM 609
8	Middle cell, south wall	From jet WM 501 in WM 101 to WM 180	WM 608
9	West cell, south wall	From jet WM 500 in WM 100 to WM 180	WM 607

Table 31

Leak-Detection Sample Boxes in Waste Collection Area of CPP 601

Pot No.	Location	Process Line	Sampler No.
WB 101	WB cell, south wall	From pump WB 200	WB 601
WC 101	WC cell, west wall north	From pump WC 200, lower tile	WC 601
WC 102	WC cell, west wall south	From pump WC 200, upper tile	WC 602
WD 101	WD cell, east wall north	From pump WD 200, lower tile	WD 601
WD 102	WD cell, east wall south	From pump WD 200, upper tile	WD 602
WE 101	WE cell, south wall west	From pump WE 200, lower tile	WE 601
WE 102	WE cell, south wall east	From pump WE 200, upper tile	WE 602

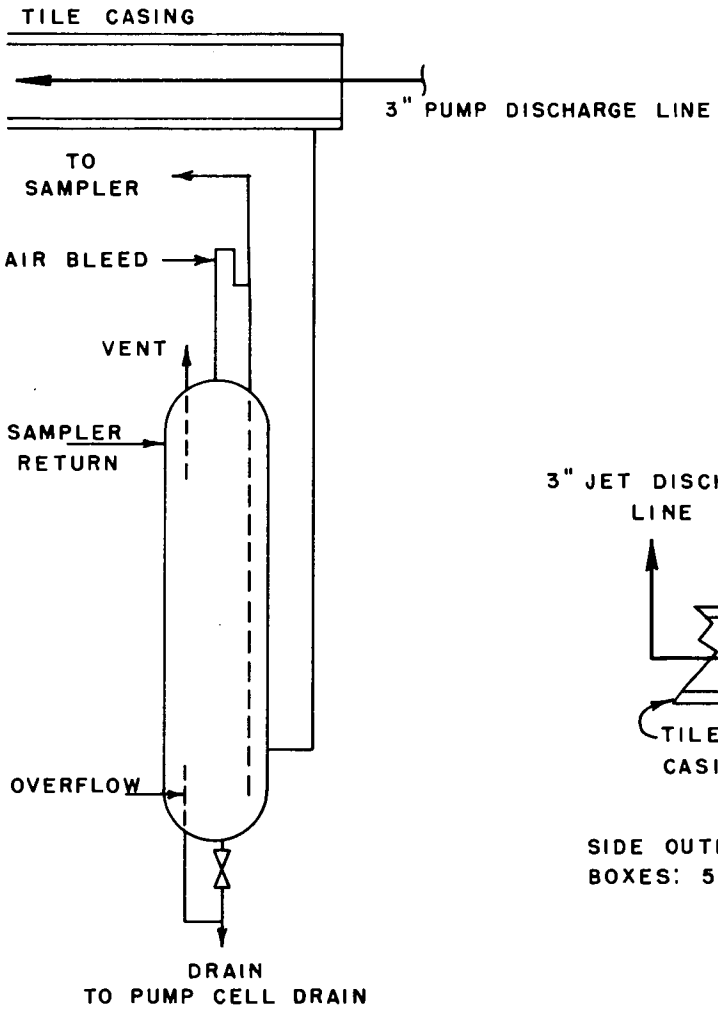

LEAK DETECTION POTS CPP-601

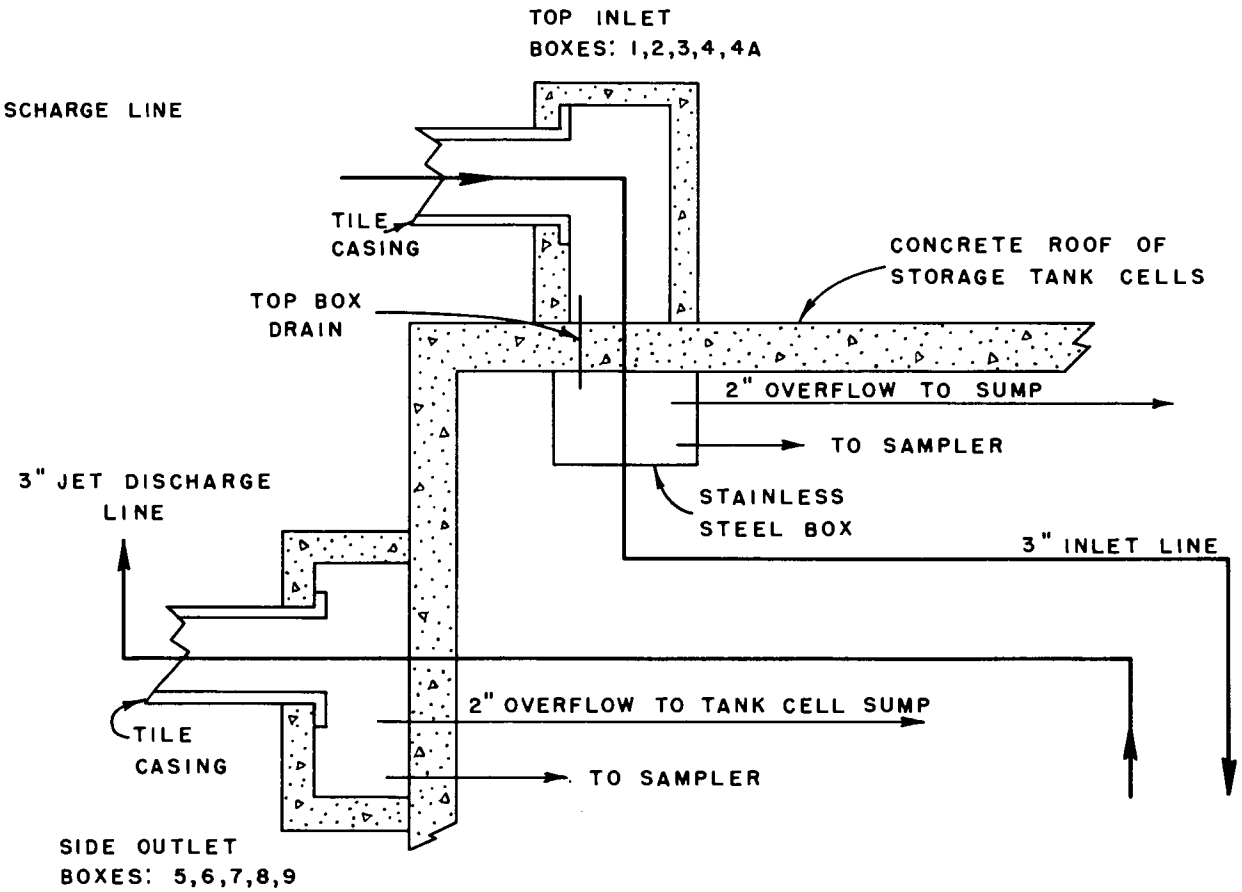

LEAK DETECTION BOXES CPP-604

FIGURE 36

LEAK DETECTION POTS AND BOXES

DWG. 18605

In addition to the sample pots and boxes at the ends of the waste lines, small concrete boxes are provided every 50 ft in the encasing tile extending across the yard between CPP 601 and CPP 604. Boxes of this type are not provided in the encasing tiles between CPP 604 and the Waste Tank Farm because these runs are short. The purpose of these boxes is to provide a means of finding the approximate location of leaks and to provide room for expansion of the stainless steel waste lines when they become heated from steam cleaning. These underground boxes contain small sumps to accumulate liquid that flows from the upstream tile. The sumps in upstream boxes must overflow to the downstream tile before liquid reaches downstream boxes. When a sample from a pot or box at the end of a line reveals a leak in a waste line, the leak can be located by sampling the underground boxes upstream until a box is found which either yields no sample or a nonradioactive sample. It is then known that the leak is between that box and the next box downstream.

A suction pot at ground level is provided for every underground box. The suction pots are carbon steel cylinders made of 8-in. pipe and covered with a pipe cap screwed only hand tight. The pots are supported in blocks of concrete. A 1/4-in. stainless steel tube encased in a 2-in. carbon steel pipe extends from each suction pot to the sump in the underground box below it. A sample from the sump can be drawn through the tube by a small portable vacuum tank and a vacuum flask. Such samples need not be analyzed, as a radiation detection instrument can determine if the sample is radioactive. Drawing No. 542-41-P755 (not reproduced here) shows the details of the underground boxes and the suction pots.

Waste lines and their tile encasings are to be flushed thoroughly after a leak is located and before any excavation for repairs. Samples are to be taken periodically from the pots and boxes in CPP 601 and CPP 604 to keep a check on the waste lines. The following drawings give details of the leak-detection system:

Engineering flowsheets	542-11-P1356
	542-11-P381
	542-41-P372
	542-41-P382
Piping drawings	542-11-P145
	542-41-P746
	542-41-P747
	542-41-P755
	542-41-P756
	542-41-P757
	542-41-P750
	542-41-P751
	542-41-P752
	542-41-P753

Concrete drawings 542-41-F744
542-41-F721

8.2 Sampling Facilities

Sampling the waste streams and the stored waste is an important means of controlling waste handling. Sampling stations called "sample galleries" have been provided in the control rooms of the waste collection area in CPP 601 and in the sample corridor and the operating corridor of CPP 604. Table 32 gives the routine samples to be taken from the liquid waste systems.

In addition to the routine samples listed in Table 32, there are two sources of emergency samples. These are WT 600 for the CPP 601 pipe trench sump and WL 608 for P.E.W. evaporator separator tank WL 108. Sampler WT 600 is used to determine the radioactivity of liquid collected in the pipe trench sump. Sampler WL 608 is used to determine the radioactivity of steam condensate from evaporator vacuum jet WL 503 when the condensate monitor warns of high activity level in P.E.W. condensate from the evaporator.

8.2.1 Sampler Transfer Stations (Sample Galleries)

The sampler stations are so constructed that operators can withdraw highly radioactive samples from waste vessels without exposure to radiation. The sample is drawn from the waste system to the sample transfer station (sample gallery) by a recirculating air jet located in the transfer station. When the sample bottle is held against the sampler nozzle on the suction side of the air jet, the bottle becomes a part of the vacuum system, whereby the waste to be sampled rises from the source through a 1/4-in. stainless steel tube to the sample bottle, overflows to the air jet, and passes with the motivating air through a 3/4-in. stainless steel tube back to the source vessel. During sampling, the waste is recirculated several minutes for flushing the suction line completely to ensure obtaining a representative sample. When the air jet is turned off, the sample bottle remains partly full of solution, which is taken as the sample. Most samplers are equipped with an air bleed orifice at the source vessel to admit a small quantity of air to the suction line. This acts as an air lift to assist in raising the liquid to the sample station.

Several transfer units are mounted in each sample station, which is a wall mounted, lead shielded cabinet. The jets are mounted on the rear wall of the cabinet with their suction nozzles pointing down. Each suction line, which brings the sample from the source, is mounted concentrically within its jet suction nozzle and extends a fraction of

Table 32

Routine Samples to Be Taken from the Liquid Waste Systems

Source	Samplers	Frequency	Analysis
P.E.W. collection tanks WG 101 and WH 100	WG 601, WH 600	One sample for each full tank before waste is transferred	Uranium, gross radioactivity
P.E.W. evaporator feed surge tank WL 102	WL 602	One sample before the start of each evaporator run or for each waste addition to WL 102	Gross radioactivity, phosphate, carbonate, acidity, solids
P.E.W. concentrate accumulator tank WL 113	WL 613	One sample at end of each evaporator run	Gross radioactivity, acidity, phosphate, carbonate, solids
P.E.W. concentrate receivers WL 106 and WL 107	WL 602, WL 607	One sample for each full tank before condensate is transferred	Gross radioactivity
Raffinate storage tanks WM 100, WM 101, WM 102, and WL 101	WM 600, WM 601, WM 602, WL 602	One sample per month from each tank containing raffinate	Gross radioactivity, acidity, solids, aluminum nitrate
C.F.D. collection tanks WG 100 and WH 101	WG 600, WH 601	One sample from each full tank before waste is transferred	Uranium, gross radioactivity
Service waste Monitoring Station	Milton-Roy pump	One aliquot each 8 hr	Gross radioactivity
Leak-detection sampling pots and boxes in CPP 601 and CPP 604	WB 601, WC 601, WC 602, WD 601, WD 602, WE 601, WE 602, WM 605, WM 607, WM 608, WM 609, WL 611, WL 612, WL 614, WL 616, WL 617, WL 618	One sample per month per sampler	Gross radioactivity

an inch beyond the end of the nozzle. The air lines to the jets enter the cabinets from above, each connecting to the top of a jet. Figures 37, 38, and 39 show the arrangement and details of a sampling station. The interior surfaces of the stations are stainless steel, the exterior surfaces carbon steel painted with Amercoat 33. Access doors are provided in the faces of the sampler stations to permit cleaning and repair of the transfer units, which are screwed together for easy disassembly.

Each sampler transfer unit is supplied with high-pressure air and 5 psig steam. The high-pressure air operates the sampler jet. The steam is used periodically to clean the small orifice in the jet. Air and steam are fed to the jet through a single strainer and 1/2-in. line from separate control valves located above the gallery. A pressure gauge is connected to this line downstream from the strainer. A water spray ring is provided for every two transfer units. The spray ring surrounds the transfer units and bathes them with sprays of water when a control valve above the transfer station is opened. A sight glass in the water line reveals when water is flowing to the spray ring. Each transfer station has a stainless steel tray under the transfer units. The tray slopes to a 1-in. drain, which conducts the spillage and flushing water to a hot waste tank. Care must be taken to prevent the use of excess flushing water, as the waste produced must be evaporated.

8.2.2 Sample Carrier

A shielded carrier is provided for transporting samples from the sample transfer stations to the control laboratories. The sample carrier is a uniquely constructed truck consisting of a stainless steel frame surmounted by a lead cylinder. The carrier is mounted on four flanged roller bearing wheels designed to ride on two flat tracks. The major components of the carrier are the internal rotating cylinder, the bottle-lifting mechanism, and the lead shielding cylinder.

The internal rotating cylinder is fitted eccentrically in the lead shielding and has two sample bottle holes located in one quadrant. The cylinder can be rotated to locate either sample bottle hole directly beneath the bottle-removal tube, or it can be rotated 180° to surround the sample bottles by the maximum shielding of 4-1/2 in. of lead. The cylinder is constructed of type 302 stainless steel plate filled with lead in such a way that the assembly can be rotated within the surrounding lead shield. The index handles on the right side of the assembly has three marked positions: "1,"for alignment of sample No. 1 with the bottle removal tube; "2," for a similar

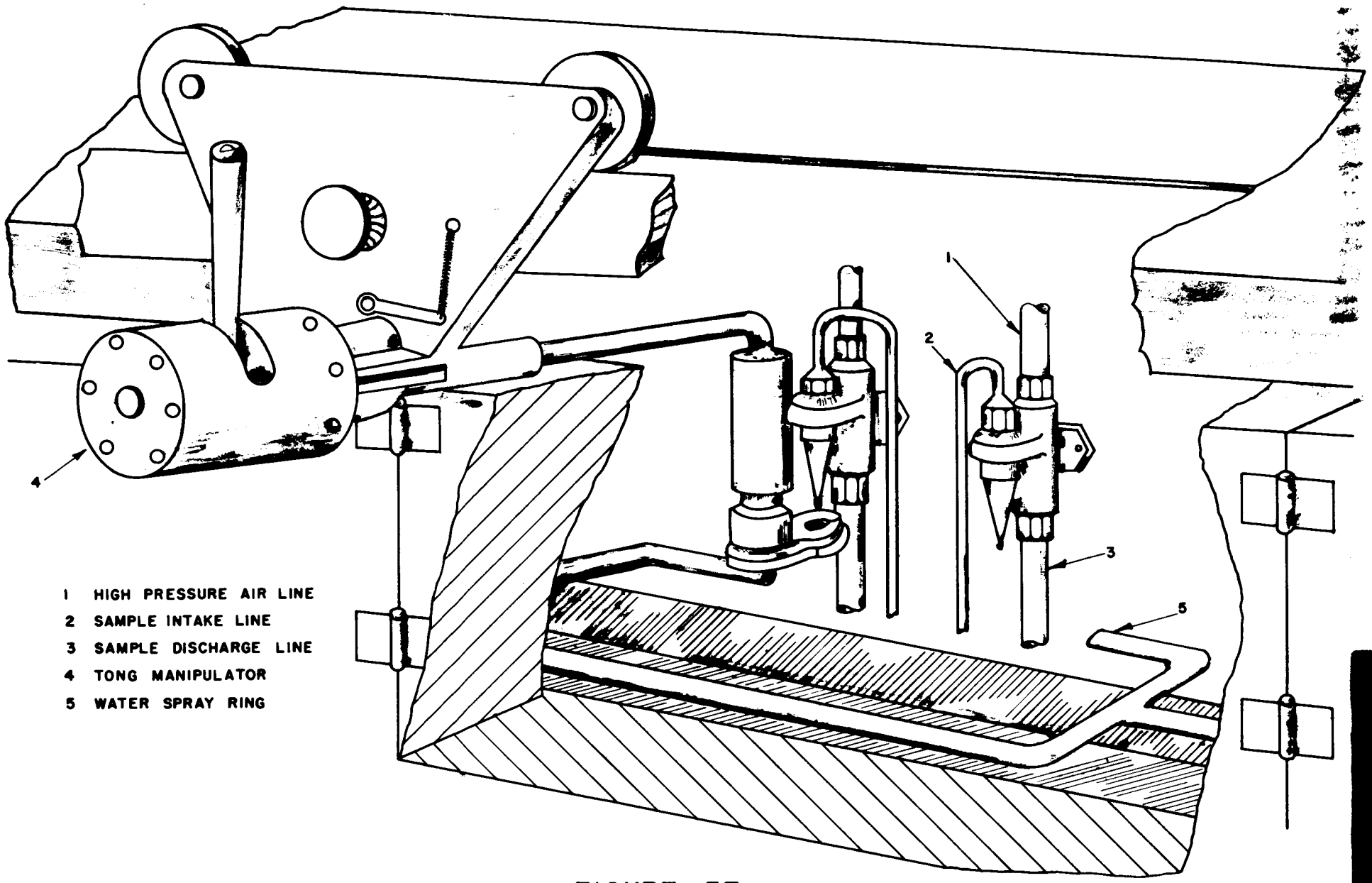

1 HIGH PRESSURE AIR LINE
2 SAMPLE INTAKE LINE
3 SAMPLE DISCHARGE LINE
4 TONG MANIPULATOR
5 WATER SPRAY RING

FIGURE 37
SAMPLE TRANSFER STATION

DWG. 20374

[redacted]

DWG. 18609

[redacted]

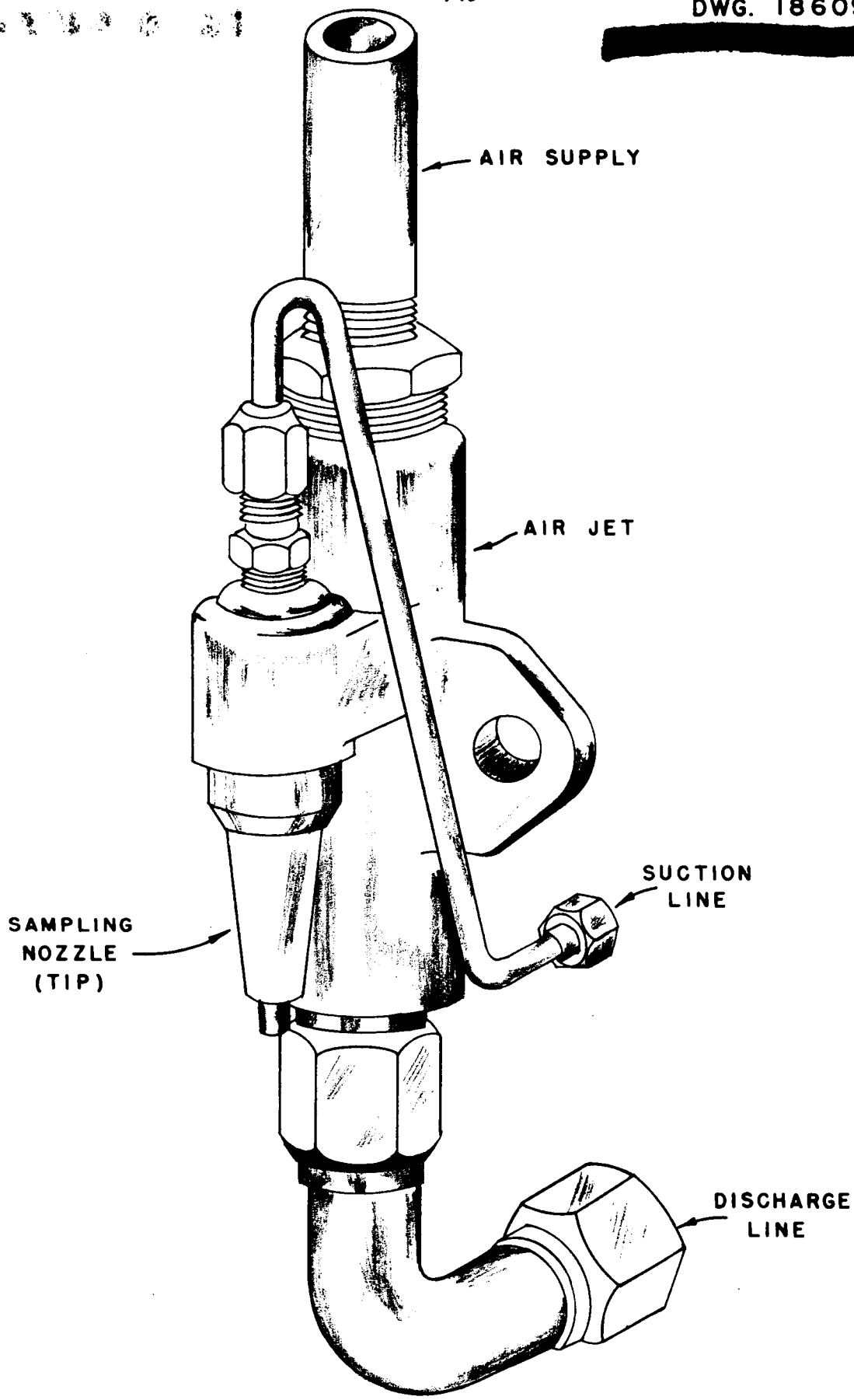

FIGURE 38
SAMPLER TRANSFER UNIT

DWG. 20458 [redacted]

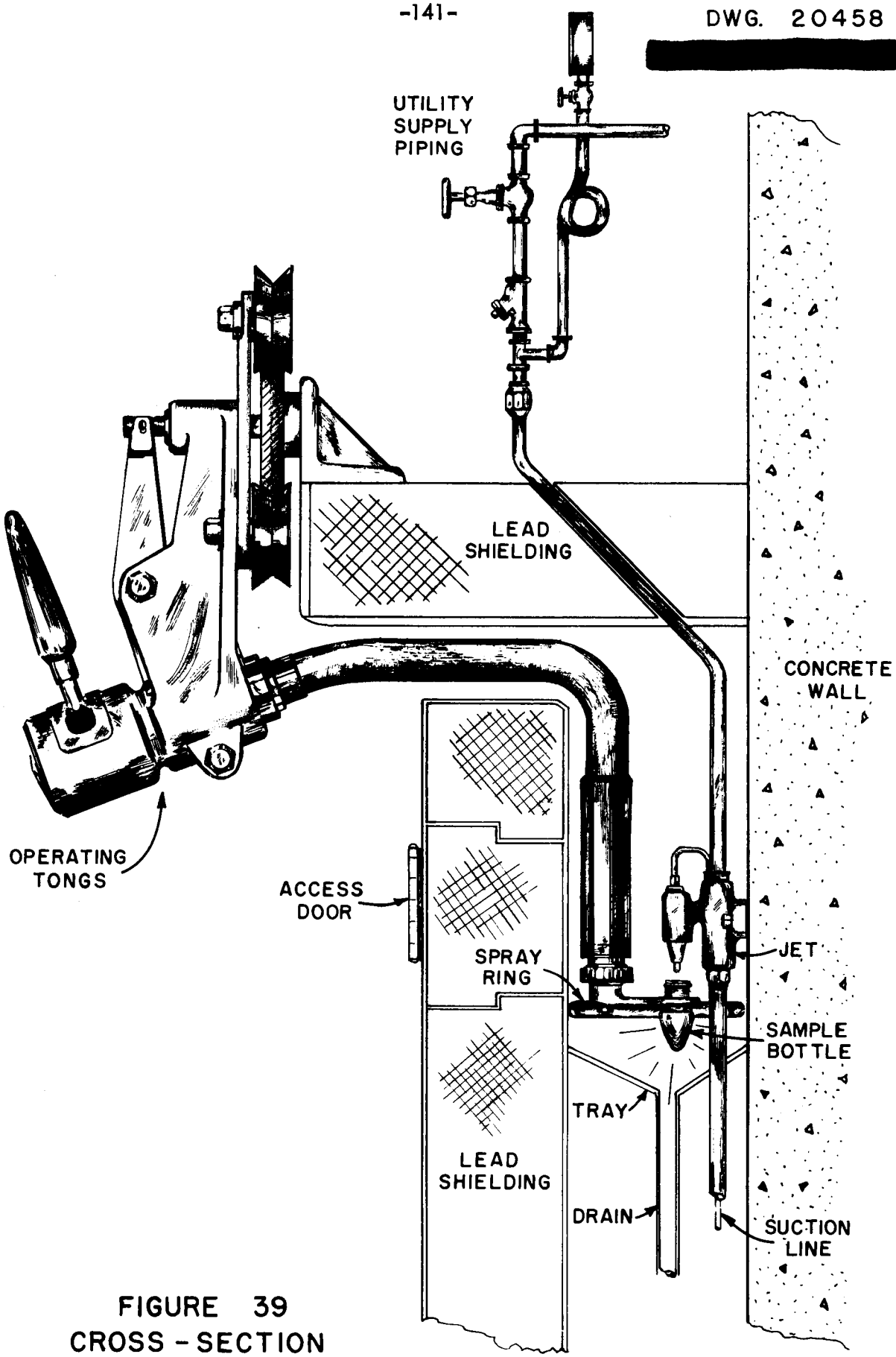

FIGURE 39
CROSS - SECTION
OF
TRANSFER STATION

alignment of bottle No. 2 with the bottle-removal tube; "SAFE," for the position of both bottles when rotated to the point of maximum shielding. On the left side of the assembly a second handle locks the rotating cylinder in any of the three positions. As a separate safety factor, a mechanism has been provided to prevent the rotation of the internal cylinder except when the sample bottles have either been removed from the carrier or are in their proper position in the cylinder holes.

The bottle-lifting mechanism is used to remove the sample bottle from the rotating cylinder by lifting it to the mouth of the bottle-removal tube. The mechanism is actuated by a pivoted handle bar located in the front center of the assembly. To raise a sample bottle into the bottle-removal tube, the rotating cylinder is first properly aligned; then the handle bar is levered down on its pivot; and the bar is pushed into the assembly. By means of a connecting cable, this motion raises the sample bottle into the bottle-removal tube until the neck of the bottle extends slightly above the tube mouth, from which position it can be gripped by the operating tongs. When the bottle is returned to the carrier, the operation is reversed. Figure 40 illustrates the sample carrier. The carrier is transported on an electric truck.

8.2.3 Sample Carrier Station

Each transfer station is provided with a carrier station into which the sample carrier can be rolled on tracks. The carrier stations are lined inside with stainless steel and shielded with lead. The front of each carrier station is composed of four lead-filled doors, two upper and two lower, all four of which must be open to admit the carrier. After the carrier is rolled into the carrier station, the upper doors are closed to provide shielding while the operation of removing the sample bottle from the carrier (or returning it) takes place. A bottle-decapping mechanism, designed to cap and uncap the sample bottles remotely, is located in the upper section of each carrier station. When a sample bottle is removed from the carrier by the operating tongs, it is raised until it comes in contact with the decapping mechanism, which grips the bottle cap. By rotating a wheel outside the top of the carrier station, the operator unscrews the cap from the bottle. The decapper holds the cap until the bottle is returned to be recapped.

8.2.4 Operating Tongs

The operating tongs are designed to handle the sample bottles remotely from the time a bottle is removed from the carrier,

DWG. 18607

[redacted]

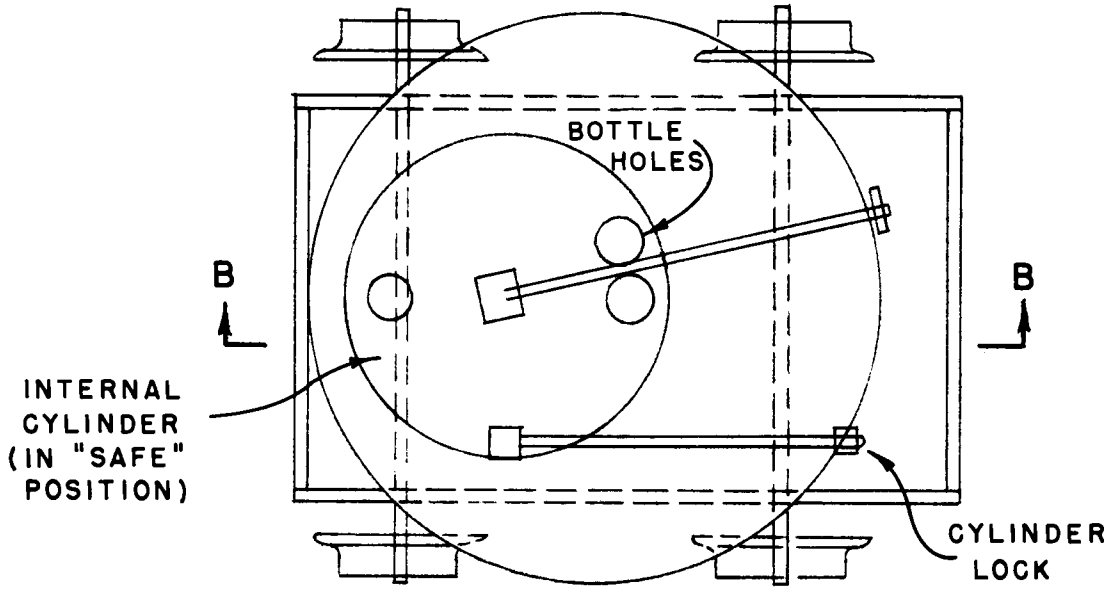

PLAN SECTION "A-A"

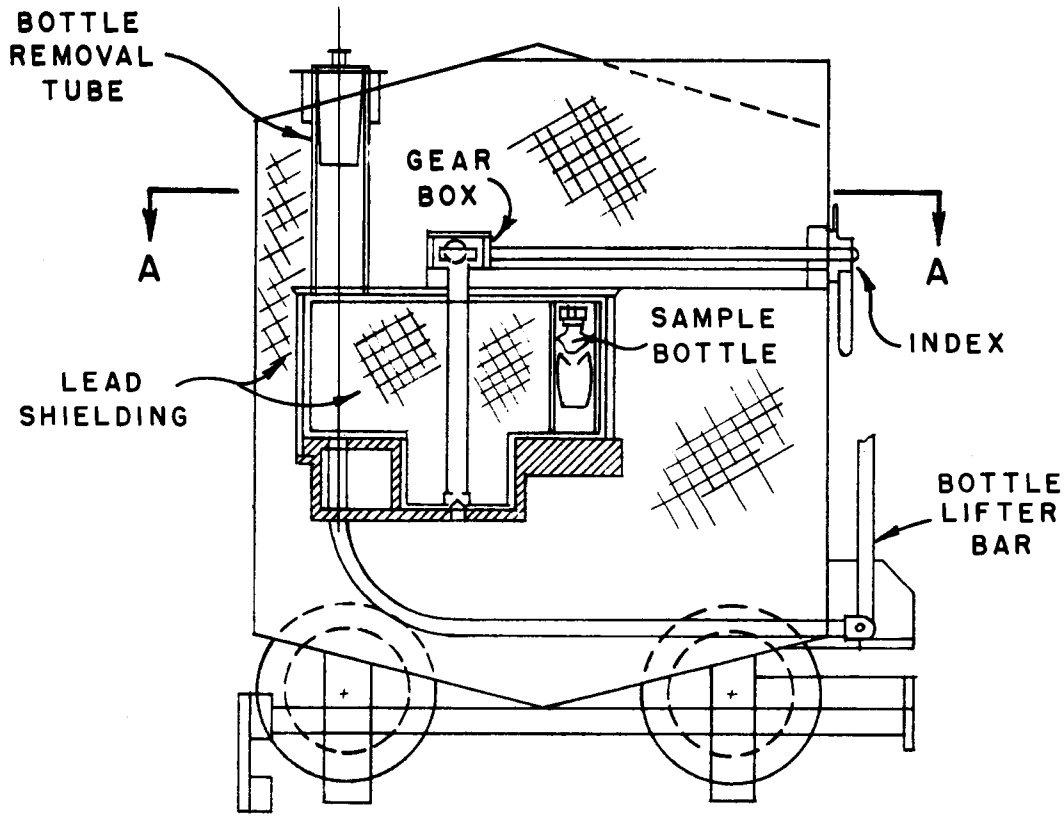

SECTION "B-B"

FIGURE 40
SAMPLE CARRIER

manipulated through the decapping and sample transfer operations, until the filled bottle is recapped and returned to the carrier. The tongs can be manipulated to raise and lower the sample bottle by moving a handle outside the shielded sample gallery. The tongs also grip the bottle automatically when in the proper position and do not release it until turned to a release position. The tongs are supported by wheels riding on a rail on the front face of the sample gallery. The handle extends into the gallery through a slot near the gallery top and bends downward inside the gallery to reach the sample jets. This arrangement allows easy manipulation and travel to all points in the gallery while protecting the operator outside from radiation inside the gallery. Figures 37 and 39 illustrate the operating tongs. A periscope and light are attached to the side of the operating tongs for observing any operation taking place inside the sample gallery.

8.2.5 Transporting of Waste Samples

Extremely radioactive samples must be transported inside the carrier by means of an electric truck. A chain hoist at the south end of the CPP 601 access corridor has been provided over the hatches above pump cells WB, WC, WD, and WE. The carrier can be lifted from the waste-collection-area control rooms, where sample galleries 12 and 13 are located, to the access corridor. A truck in the control rooms must transport the carrier from the carrier station to a point under the hoist, and another truck must transport the carrier from the hoist, through the access corridor, and up the ramp to the elevator in the basement of CPP 602. The elevator gives access for the truck to cell X, the sample dilution cell, where samples are prepared for the control laboratory.

When the radioactivity level of waste samples in CPP 601 is low enough, it is desirable to transport the samples on foot using a 1-ft-diameter cage to hold the sample away from the operator. Most waste samples in CPP 601 should normally be cold enough to permit such easy handling.

Extremely hot waste samples from CPP 604 must be transported in the heavily shielded carrier by means of an electric truck in the CPP 604 sample corridor, where sample galleries 1 and 2 are located. The electric truck transports the carrier into the access shaft, from which the carrier is raised to ground level by means of a hoist in the roof of the superstructure above CPP 604. This hoist then loads the carrier onto an automotive truck for transportation to the Laboratory Building (CPP 602) basement. Another hoist at the foot of

the vehicular ramp in the CPP 602 basement unloads the carrier from the automotive truck onto an electric truck for transportation to the elevator and thence to cell X.

Samples from sample gallery 3 in the CPP 604 operating corridor can be transported on foot in a space-shielded carrier cage. Sample gallery 3 is not shielded and is not provided with operating tongs and other remote manipulating devices because the activity level of its samples should never be high enough to require such handling methods.

8.2.6 Waste-System Samplers

Table 33 lists the waste-system samplers, their galleries, relative activity levels, vessels they serve, and vessels into which their jets discharge.

Table 33

Waste-System Samplers

Sampler No.	Vessel Sampled	Level of Activity*	Vessel Connected to Sampler Return Line
	CPP 601, Gallery 13		
WT 600	WT 101	Medium	WG 101
WG 600	WG 100	Low	WG 100
WG 601	WG 111	Medium	WG 101
WB 601	Pot WB 101	Low	WB 101
WC 601	Pot WC 101	Medium	WC 101
WC 602	Pot WC 102	Medium	WC 102
	CPP 601, Gallery 12		
WH 601	WH 101	Low	WH 101
WH 600	WH 100	Medium	WH 100
WE 601	Pot WE 101	Low	WE 101
WE 602	Pot WE 102	Low	WE 102
WD 601	Pot WD 101	Medium	WD 101
WD 602	Pot WD 102	Medium	WD 102

Continued on next page.

Table 33 Continued

Sampler No.	Vessel Sampled	Level of Activity*	Vessel Connected to Sampler Return Line
		CPP 604, Gallery 1	
WM 600	WM 100	High	WM 100
WM 601	WM 101	High	WM 101
WM 602	WM 102	High	WM 102
WM 605	Box 2	High	WM 100
WM 609	Box 7	High	WM 102
WM 608	Box 8	High	WM 102
WM 607	Box 9	High	WM 100
		CPP 604, Gallery 2	
WL 601	WL 101	Medium	WL 101
WL 602	WL 102	Medium	WL 102
WL 613	WL 113	Medium	WL 102
WL 616	Box 1	Medium	WL 101
WL 614	Box 3	Medium	WL 101
WL 611	Box 4	Medium	WL 101
WL 612	Box 4a	Medium	WL 101
WL 618	Box 5	Medium	WL 101
WL 617	Box 6	Medium	WL 101
		CPP 604, Gallery 3	
WL 606	WL 106	Low	WL 106
WL 607	WL 107	Low	WL 107
WL 608	WL 108	Low	WL 108

*Approximate ranges of activity at contact: High is above 10^5 βc/m/ml
Medium is above 10^2 βc/m/ml
Low is below 10^2 βc/m/ml

8.2.7 Reference Drawings

The following drawings show the arrangement and details of waste-system sampling stations, carrier stations, carriers, operating tongs, periscopes, and other sampler components:

CPP 601

Waste collection area, sampler flowsheet	542-11-P381
Sampler off-gas system	542-11-P383
Galleries 12 and 13, utility supply piping	542-21-P1344
Waste collection area, sampler piping	542-11-P145
Sampler equipment, drawing index	542-22-C1637
Galleries No. 1 through 13, general notes and key plan	542-22-C1636
Galleries 12 and 13, plan, elevation, and section	542-22-C1638
Galleries 12 and 13, sections	542-22-C1639 through C1642
Assembly of sample carrier	542-22-C1576
Details of sample carrier	542-22-C1577 through C1581
Assembly of operating tongs	542-22-C1583
Details of operating tongs	542-22-C1583 through C1589
Assembly of sampling decapper	542-22-C1598
Details of sampling decapper	542-22-C1599 and C1600
Flexible cable for sampling slots	542-22-C1676
Track details for operating tongs	542-22-C1677
Rubber seal details for gallery operating slots	542-22-C1678

Detail of spray rings	542-22-C1681
Assembly of vertical K plugs 9, 10, 14, and 15 (waste control rooms)	542-22-C1682
Details of K plugs 9, 10, 14, and 15 (waste control rooms)	542-22-C1683
Galleries 12 and 13, details of transfer units	542-22-C1685
Galleries 12 and 13, internal piping	542-22-C1688 and C1687
Assembly of sampler lighting system	542-22-C1691
Assembly of sampler periscope	542-22-C1691
Details of sampler periscope	542-22-C1692 through C1694
Modifications to fork truck	542-22-C1974
Details of sampler periscope	542-22-C1981 through C1983
Bill of materials, galleries 12 and 13	542-22-C1930
Waste Disposal Building, sampler flowsheet	542-41-P382
Sample galleries 1 and 2, service supply piping	542-41-P1345
Sample corridor piping	542-41-P758 and P759
Sampler equipment, drawing index	542-42-C1654
Galleries 1 and 2, sections and details	542-42-C1649 through C1652
Assembly of vertical K plugs 5-8 and 14-18	542-42-C1656
Details of vertical K plugs 5-8 and 14-18	542-42-C1656
Assembly of transfer unit	542-42-C1657
Details of transfer unit	542-42-C1658

Galleries 1 and 2, internal piping	542-42-C1659 and C1660
Track details for operating tongs	542-42-C1663
Assembly of decapper	542-42-C1663
Details of decapper	542-42-C1666 and C1665
Assembly of sample carrier	542-42-C1666
Details of sample carrier	542-42-C1667 through C1672; 542-42-C1973 and C1974
Assembly of sampler lighting system	542-42-C1673
Details of sampler lighting system	542-42-C1675 and C1674
Assembly of sampler tongs	542-42-C1950
Details of sampler tongs	542-42-C1951 through C1957
Gallery 3 assembly and detail of horizontal K plugs	542-42-C1958
Gallery 3, general assembly	542-42-C1959 and C1960
Details of gallery 3 transfer units	542-42-C1961 through C1965
Gallery 3 spray rings	542-42-C1966 and C1967
Assembly of sampler periscope	542-42-C1968
Details of sampler periscope	542-42-C1969 through C1986
Carrier track installation	542-42-C1987
Modifications to fork truck	542-42-C1988
Galleries 1, 2, and 3, bill of materials	542-42-C1972
Details of sample carrier	542-42-C1975
Sample carrier materials list	542-42-C1976
Gallery 3 service supply piping	542-42-C1347

9.0 BIBLIOGRAPHY

July 18, 1950: Design Criteria Preliminary Specification No. 2 for ICPP Chemical Processing Building.

CF-50-6-121 (ORNL): A. M. Rom memo to W. K. Eister, "Liquid Waste Resulting from One Day's Operation of the MTR, NP, or EBR Chemical Plant."

CF-50-8-112 (ORNL): H. E. Goeller, R. J. Klotzbach, and E. L. Nicholson to F. L. Culler, "Standard Equipment Identification Procedures for the ICPP."

CF-50-8-146 (ORNL): F. N. Browder memo to F. L. Culler, "Estimates of Radiochemical Waste Volumes, Evaporator Capacity, and Waste Concentration Storage" (Aug. 30, 1950).

CF-50-10-137 (ORNL): F. L. Culler, "Vessel Testing and Inspection Procedures" (Oct. 27, 1950).

CF-50-10-139 (ORNL): F. L. Culler, "Information for Fabricator Selection for Stainless Steel Processing Vessels and Equipment" (Oct. 31, 1950).

CF-50-10-167 (ORNL): H. E. Goeller memo to F. L. Culler, "Radioactive Heating in First Cycle Aqueous Raffinate Permanent Waste Tanks" (Oct. 31, 1950).

CF-51-5-155 (ORNL): E. N. Hurd, "Polarographic Determination of Uranium" (May 25, 1951).

CF-51-6-12 (ORNL): L. W. Zahnstecher memo to F. L. Culler, "Process Calculations Report No. II (June 1, 1951).

CF-51-6-53 (ORNL): F. L. Culler memo to H. A. Ohlgren, "Chemical Material Balance Flowsheets for the Idaho Chemical Processing Plant: (1) NP Fuel; (2) MTR Fuel; (3) EBR Fuel" (June 6, 1951).

CF-51-7-121 (ORNL): Utility Characteristics, Design Criteria, and Normal Demand at USAEC Idaho Chemical Processing Plant.

CF-51-11-14 (ORNL): A. M. Rom memo to F. L. Culler, "Compressed Air Requirements and Sampler Jet Air Consumption Calculation for the ICPP" (Nov. 2, 1951).

CF-51-11-26 (ORNL): A. F. Arruzza memo to F. L. Culler, "Sample Calculations Used in Determining Pipe Sizes for Steam, Air, and Water in the ICPP" (Nov. 2, 1951).

CF-52-2-207 (ORNL): L. W. Zahnstecher memo to F. L. Culler, "Preliminary Calculations on Cooling Coil Design for Tanks WM 100, WM 101, and WM 102 in the Idaho Chemical Processing Plant" (Feb. 28, 1952).

CF-52-3-34 (ORNL): W. L. Carter memo to F. L. Culler, "A Study of the Effect of Cooling Water Temperature on Heat Transfer by Natural Convection in First Cycle Waste Tanks" (March 7, 1952).

CF-52-5-140 (ORNL): R. P. Milford memo to F. L. Culler, "Preliminary Bibliography of ICPP Documents in ORNL Central Files."

IDO-14079-ACCO: S. F. Fairbourne, V. W. Irvine, A. M. Larson, B. H. Macklin, L. G. Pearson, and H. L. Sexton, "IDO Liquid Waste Plant CPP 604: Building Operating Equipment Manual" (May 22, 1952).

IDO-14094-ACCO: F. N. Browder and R. T. Jacobs, "Liquid Waste Operating Manual," Vol. III (July 15, 1952).

IDO-26058-ORNL: H. E. Goeller memo to R. E. Torley, "Radioactivity Data for CPP-NP Start-up Runs" (Jan. 31, 1953).

ORNL-393: Chemical Process Design Section, "Design and Initial Operation of a Radiochemical Waste Evaporator" (Sept. 22, 1949).

J. H. Perry, editor, "Chemical Engineers' Handbook," 3d ed., McGraw-Hill, 1950.

R. T. Kent, editor, "Mechanical Engineers' Handbook," 11th ed., Wiley, 1936.

10.0 APPENDIX

10.1 ICPP Area Arrangement

Table 34 lists the buildings in the ICPP area with their code numbers and functions.

Table 34

Code Numbers and Functions of ICPP Area Buildings

Bldg. No.	Building Name	Function
CPP 304	Service waste Disposal Well	Service waste disposal
CPP 601	Process Building	Separation of uranium from fission products
CPP 602	Laboratory Building	Analysis of process streams
CPP 603	SF Storage Building	Temporary storage of spent fuel elements
CPP 604	Waste Disposal Building	Treatment of liquid and gaseous wastes
CPP 605	Stack and blower area	Disposal of gaseous wastes
CPP 606	Service Building	Provide water, air, and steam to CPP 601, 602, and 604
CPP 609	Main Guard House	Security
CPP 611	Well No. 1 Pump House	House deep well pump No. 1
CPP 612	Well No. 2 Pump House	House deep well pump No. 2
CPP 704	Transformer area	Provide power to CPP 604 and 605
CPP 705	Transformer area	Provide power to CPP 601, 602, and 606
CPP 706	Transformer area	Provide power for perimeter lighting

Table 34 Continued

Bldg. No.	Building Name	Function
CPP 709	Monitoring Station	Monitor service waste
CPP 710	Solvent storage area	Storage for CPP 601 fresh solvent
CPP 712	Instrument House	House Waste Tank Farm instruments

Figure 41 shows the arrangement of the ICPP area buildings. Details of building locations can be found on the following plot plan drawings:

Key Plot Plan	542-61-G1
SF Storage Area	542-61-G2
Laboratory and Process Area	542-61-G5
Waste Disposal and Stack Area	542-61-G6

Figure 42 is a schematic diagram of the complete waste disposal system for the ICPP.

10.2 Utilities for Liquid Waste Areas in the ICPP

10.2.1 Waste Collection Area in CPP 601

Table 35 lists the pertinent data for the fluid utilities supplied to the waste collection area of CPP 601. Electric power for lighting the control rooms, tank cells, and pump cells and for operating the pumps and agitators is supplied to the collection area from the CPP Substation through lighting and power control centers in the Service Building, which connect to corresponding centers in the waste control rooms. Figure 43 is a diagram of the electric power supply for this area. Emergency power for lighting and for operating one C.F.D. pump and one P.E.W. pump is supplied through special control centers from a diesel-driven generator in the Service Building, which starts automatically when the normal power fails.

DWG. 20257

[redacted]

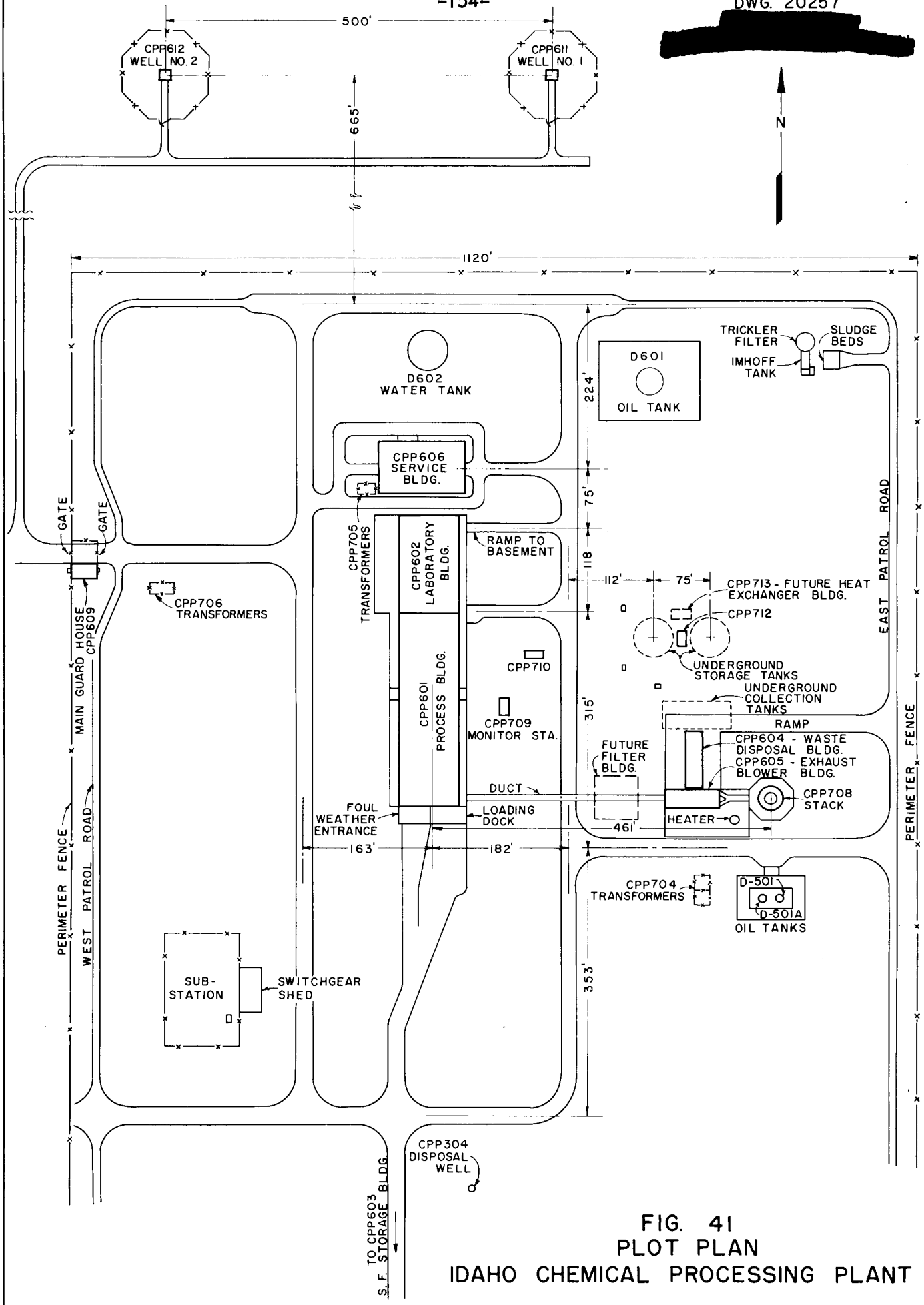

FIG. 41
PLOT PLAN
IDAHO CHEMICAL PROCESSING PLANT

[redacted]

Dwg. 18595

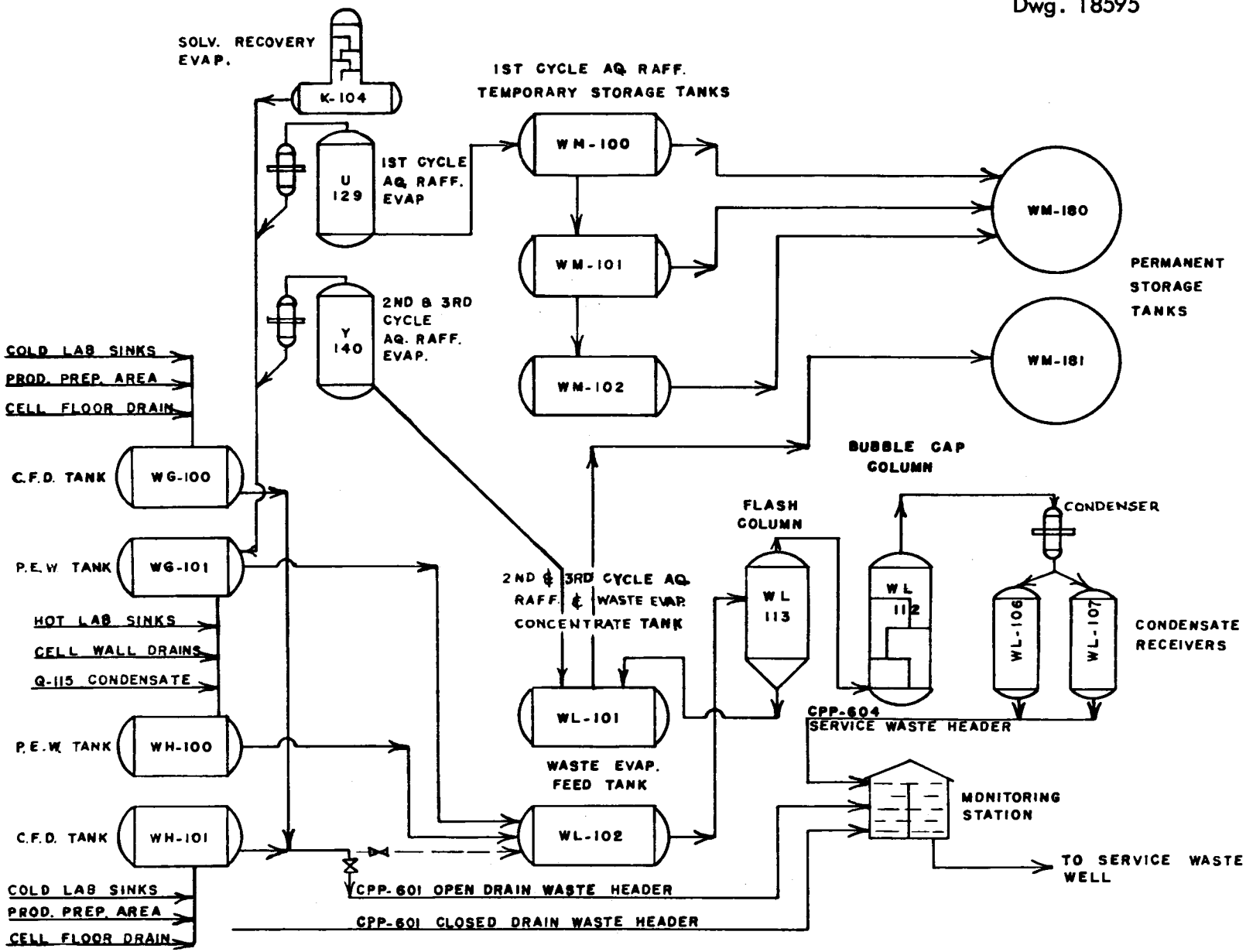

Fig. 42. Complete Waste Disposal System.

Table 35

Utilities Supplied to CPP 601 Collection Area for P.E.W. and C.F.D. Wastes

Utility	Header Size (in.)	Delivered Pressure (psig)	Demand		Use
			Normal	Maximum	
High-pressure steam	1-1/2	115	320 lb/hr	640 lb/hr	Operate transfer jets in collection tank cells
Low-pressure steam	1-1/2	35	88 lb/hr	500 lb/hr	Heat control rooms, operate four collection tank spargers, clean samplers, decontaminate cells
High-pressure air	1	115	7.4 scfm	22.2 scfm	Operate sampler jets in galleries 12 and 13 for collection tanks (normal: one sampler operating; maximum: three samplers operating simultaneously
Low-pressure air	1-1/2	50	105 scfm	210 scfm	Operate four collection tank spargers (normal: one tank sparged at any one time)
Instrument air	3/4	50	1 scfm	1 scfm	Operate four remote valve controls (RVC's) in pump casing drains
Instrument air	3/4	20	3 scfm	1 scfm	Operate liquid level and density recorder-controller-alarms in four collection tanks
Treated water	1	90	None	200 gpm	Sampler flushing, pump flushing, cell decontamination, general cleaning

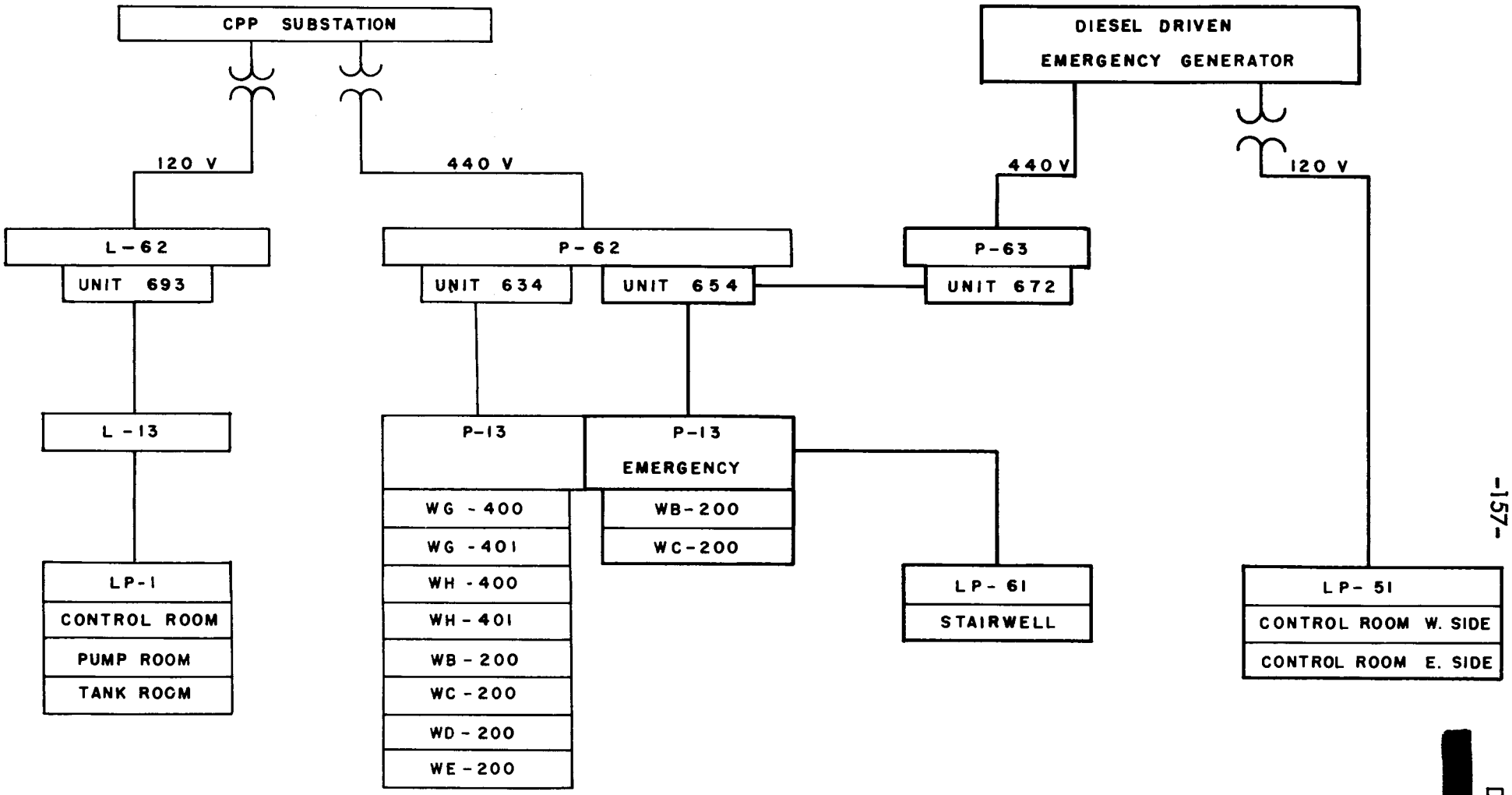

FIGURE 43

LIQUID WASTE SYSTEM ELECTRICAL LAYOUT IN CPP601

DWG. 20459

The following drawings give the details of the utilities supplied to the waste areas of the Process Building:

Engineering flowsheets	542-11-P1355 542-11-P1356
Piping drawings	542-11-P143 542-11-P144 542-11-P145
Instrument drawing	542-12-C910
Electrical drawings	542-61-E195 542-61-E412 542-11-E120 542-11-E124

Data and calculations for utilities can be found in ORNL memoranda CF-51-11-14 and CF-51-11-26.

10.2.2 Waste Disposal Building, Tank Farm, and Blower Building

Table 36 lists the pertinent data for the fluid utilities supplied to the Waste Disposal Building and the stack area. The Tank Farm receives these utilities from the Waste Disposal Building headers. Electric power for lighting and for pumps, fans, and other motor-driven equipment is supplied to the Waste Disposal Building from a transformer area (CPP 704) near the building. Power lines bring the current at 2400 volts from the ICPP substation to the transformers for reduction to 440 volts for feeding the power control centers in the switch gear room above the operating corridor. The lighting circuits connect to transformers in the switch gear room, which reduce the voltage to 120/208 for supplying lighting control centers.

Two power and two lighting circuits, each supplied with its own transformers and control centers served by its own power line, are provided in order to assure uninterrupted service on one circuit in the event of a failure of the other. One pump or blower for each service in the Waste Disposal Building and the stack and blower area is connected to one circuit, and another pump and blower for the same service is connected to the other circuit. The lighting is also divided and supplied by two circuits in order to provide dual service. An emergency lighting system is also provided to function when there is a complete power failure. This system is supplied from a diesel-driven generator in the Service Building, which starts automatically when the power from the main substation fails. Some pumps in the off-gas systems are served by this

Table 36

Utilities Supplied to CPP 604 and CPP 605 Areas

Utility	Header Size (in.)	Delivered Pressure (psig)	Demand		Use
			Normal	Maximum	
High-pressure steam for total steam supply	6	115	6585 lb/hr	18,275 lb/hr	To supply all steam needs in CPP 604, CPP 605, and Tank Farm (low-pressure steam supplied from reducing station in high-pressure steam header)
High-pressure steam for CPP 604	4	115	760 lb/hr	2370 lb/hr	Operate transfer jets and P.E.W. evaporator exhauster jet
Low-pressure steam for CPP 605	6	35	1805 lb/hr	4905 lb/hr	Heat CPP 604 and CPP 605
Low-pressure steam for CPP 604	6	35	4020 lb/hr	11,000 lb/hr	Operate P.E.W. evaporator, spargers in temporary storage tanks for raffinate wastes, and P.E.W. surge tank
High-pressure air	1-1/2	115	14.4 scfm	28.8 scfm	Operate sampler jets for P.E.W. evaporator and for temporary storage tanks for raffinate wastes (normal: two samplers operating; maximum: four samplers operating)
Low-pressure air	2	50	285 scfm	577 scfm	Operate spargers in temporary raffinate storage tanks (normal: one sparger operating at any one time)
Instrument air	2	50	5 scfm		Operate remote valve controls (RVC's) for P.E.W. evaporator
Instrument air	1-1/2	20	20 scfm		Operate all instruments in CPP 604, CPP 605, and Tank Farm

Continued on next page

Table 36 Continued

Utility	Header Size (in.)	Delivered Pressure (psig)	Demand		Use
			Normal	Maximum	
Treated Water	8	90	452 gpm	482 gpm	Cool P.E.W. evaporator condensers, Tank Farm condensers, and coils in temporary raffinate storage tanks; supply all water needs for CPP 604 and CPP 605 except potable water

emergency power supply, but no equipment for the P.E.W. evaporator is supplied with emergency power. Figure 44 diagrams the electric power supply to the Waste Disposal Building. Data and calculations for utilities can be found in ORNL memos CF-51-11-14 and CF-51-11-26.

The following drawings give the details of the utilities supplied to the waste disposal and stack areas:

Engineering flowsheets	542-41-P371
	542-41-P372
	542-41-P377
Piping drawings	542-11-P693
	542-41-P746
	542-41-P750
	542-41-P758
	542-41-P762
	542-41-P765
	542-41-P893
	542-41-P894
	542-41-P895
	542-41-P896
Instrument drawings	542-41-C922
	542-41-C923
	542-41-C924
Electrical drawings	542-61-E412
	542-61-E196
	542-61-E191
	542-41-E49
	542-41-E766
	542-41-E767
	542-41-E768
	542-41-E773
	542-41-E1206

10.3 ICPP Equipment Identification Code

All equipment in the ICPP is numbered according to the following system for easy identification as to function:

100 series	vessels
200 series	pumps
300 series	heat exchangers
400 series	agitators
500 series	jets
600 series	samplers
800 series	addition funnels

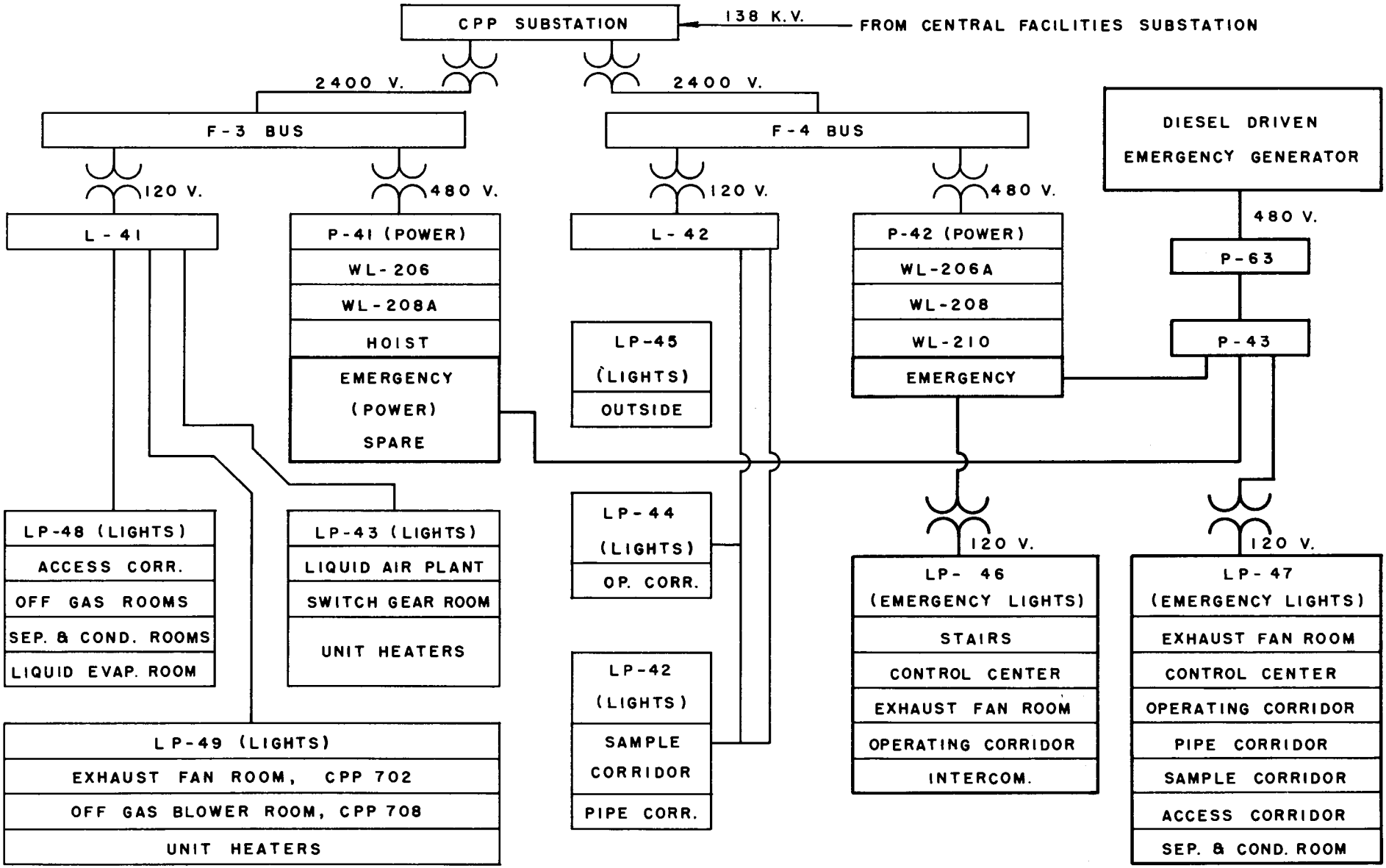

FIGURE 44

LIQUID WASTE SYSTEM ELECTRICAL LAYOUT IN CPP-604

DWG. 20460

The code numbers for equipment are prefixed with letters designating the area of location as follows:

CPP 601 Waste Collection Area

WA	west waste control room
WB	west cell floor drain waste pump cell
WC	west process equipment waste pump cell
WD	east process equipment waste pump cell
WE	east cell floor drain waste pump cell
WF	east waste control room
WG	west waste collection tank cell
WH	east waste collection tank cell
WJ	west cell air vent duct
WK	east cell air vent duct
WT	waste pipe trench

CPP 601 Process Operating Areas

PM	chemical makeup area including cell top areas and the bulk chemical storage area
PO	process operating corridor
PT	service corridor
PA	access corridor
VT	high-vacuum-pump room

CPP 601 Sampling Areas

SJ	west sampling corridor
SK	east sampling corridor
SM	sampling area on top of cells P, Q, and R.

CPP 602 Areas

LA	fan area
LB	laboratory area
LC	product preparation area
LD	service area
LE	exterior area, around Laboratory Building

CPP 604 Waste Treatment and Storage Areas

WL	waste evaporator area
WM	waste storage area
WN	off-gas disposal area
WO	oxygen-nitrogen generator

10.4 Liquid Waste Equipment Lists

The following tabulations list all the liquid waste equipment in the alphabetical order of their code numbers. Table 38 lists the waste system jets with their sizes, functions, and locations. Similar information for tanks, pumps, and agitators has appeared in sections of the report dealing with their specific functions.

CPP 601 Waste Collection Area Equipment

WB 101	Leak detection pot for WB 200 discharge line
WB 200	Pump for tank WG 100
WB 601	Leak-detection sampler for WB 200 discharge line
WC 101	Leak-detection-pot for WC 200 discharge line
WC 102	Leak-detection-pot for WC 200 discharge line
WC 200	Pump for tank WG 101
WC 601	Leak-detection sampler for WC 200 discharge line
WC 602	Leak-detection sampler for WC 200 discharge line
WD 101	Leak-detection-pot for WD 200 discharge line
WD 102	Leak-detection-pot for WD 200 discharge line
WD 200	Pump for tank WH 100
WD 601	Leak-detection sampler for WD 200 discharge line
WD 602	Leak-detection sampler for WD 200 discharge line
WE 101	Leak-detection-pot for WE 200 discharge line
WE 102	Leak-detection-pot for WE 200 discharge line
WE 200	Pump for tank WH 101
WE 601	Leak-detection sampler for WE 200 discharge line
WE 602	Leak-detection sampler for WE 200 discharge line
WG 100	Cell floor drain collection tank
WG 101	Process equipment waste collection tank
WG 102	West collection tank cell floor sump
WG 120	Process equipment waste diversion box
WG 400	Agitator for tank WG 100
WG 401	Agitator for tank WG 101
WG 500	Jet, WG 100 to WG 101
WG 501	Jet, WG 101 to WH 100
WG 502	Jet, WG 102 to WG 101
WG 503	Jet, WT 101 sump to WG 100
WG 504	Jet, WT 101 sump to WG 101
WG 600	Sampler for WG 100
WG 601	Sampler for WG 101
WH 100	Process equipment waste collection tank
WH 101	Cell floor drain collection tank
WH 102	East waste collection tank cell floor sump
WH 120	Cell floor drain waste diversion box
WH 400	Agitator for WH 100

WH 401	Agitator for WH 101
WH 500	Jet, WH 100 to WG 101
WH 501	Jet, WH 101 to WH 100
WH 502	Jet, WH 102 to WH 100
WH 600	Sampler for WH 100
WH 601	Sampler for WH 101

CPP 604 Liquid Waste Evaporator Equipment

WL 100	Vacuum roughing tank
WL 101	Collection tank for P.E.W. concentrate and second and third cycle aqueous raffinate concentrate
WL 102	Surge tank
WL 106	Condensate receiver tank
WL 107	Condensate receiver tank
WL 108	Separator tank
WL 109	Gravity feed tank
WL 112	Bubble cap tower
WL 113	Flash tank and accumulator
WL 115	Steam condensate collection tank
WL 206	Pump for condensate from WL 106 and WL 107
WL 206A	Pump for condensate from WL 106 and WL 107
WL 207	Vacuum roughing pump
WL 208	Pump for steam condensate from WL 115
WL 208A	Pump for steam condensate from WL 115
WL 300	Reboiler
WL 301	Main condenser
WL 302	After-condenser for vacuum jet
WL 500	Jet, WL 101 to WM 181
WL 501	Jet, WL 102 to WL 109
WL 502	Jet, east tank cell sump to WM 181
WL 503	Vacuum jet
WL 504	Jet, WL 112 to WL 113
WL 505	Jet, WL 101 to WM 181
WL 506	Jet, WL 102 to WL 109
WL 507	Dissolver off-gas system jet
WL 601	Sampler for WL 101
WL 602	Sampler for WL 102
WL 606	Sampler for WL 106
WL 607	Sampler for WL 107
WL 608	Sampler for WL 108
WL 611	Leak-detection sampler, Box No. 4 (WG 101 to WL 102)
WL 612	Leak-detection sampler, Box No. 4A (WH 100 to WL 102)
WL 613	Sampler for WL 113
WL 614	Leak-detection sampler, Box No. 3 (WG 100 and WH 101 to WL 102)

WL 616	Leak-detection sampler, Box No. 1 (Y 140 to WL 101)
WL 617	Leak-detection sampler, Box No. 6 (WL 101 to WM 181)
WL 800	Addition funnel for WL 300
WL 801	Addition funnel for WL 101
WL 802	Addition Funnel for WL 102
WL 809	Addition funnel for WL 109
WL 812	Addition funnel for WL 112

CPP 604 and Tank Farm Concentrated Waste Storage Equipment

WM 100	Collection tank for first cycle aqueous raffinate concentrate
WM 101	Collection tank for first cycle aqueous raffinate concentrate
WM 102	Collection tank for first cycle aqueous raffinate concentrate
WM 180	Permanent storage tank for first cycle aqueous raffinate concentrate
WM 181	Permanent storage tank for P.E.W. concentrate and second and third cycle aqueous raffinate concentrate
WM 300	Condenser for WM 180
WM 301	Condenser for WM 181
WM 302	Condenser for WM 100, WM 101, and WM 102
WM 500	Jet, WM 100 to WM 180
WM 501	Jet, WM 101 to WM 180
WM 502	Jet, WM 102 to WM 180
WM 503	Jet, WM 100 to WM 102
WM 504	Jet, WM 101 to WM 100
WM 505	Jet, WM 102 to WM 101
WM 507	Jet, west tank cell sump to WM 180
WM 508	Jet, center tank cell sump to WM 180
WM 509	Jet, WM 180 enclosure sump to WM 181
WM 510	Jet, WM 181 enclosure sump to WM 180
WM 600	Sampler for WM 100
WM 601	Sampler for WM 101
WM 602	Sampler for WM 102
WM 605	Leak-detection sampler, Box No. 2 (U 129 to WM 100)
WM 607	Leak-detection sampler, Box No. 9 (WM 100 to WM 180)
WM 608	Leak-detection sampler, Box No. 9 (WM 101 to WM 180)
WM 609	Leak-detection sampler, Box No. 7 (WM 102 to WM 180)
WM 800	Addition funnel for WM 100
WM 801	Addition funnel for WM 101
WM 802	Addition funnel for WM 102
WM 830	Addition funnel for WM 300
WM 831	Addition funnel for WM 301
WM 832	Addition funnel for WM 302

Table 37

List of Waste System Jets

Jet No.	Type	Size (in.)	Cost ($)
	Building 601, Collection Tank Cells WG and WH[a]		
WG 500	Schutte and Koerting, Fig. 217	1-1/2	108.50
WG 501	Schutte and Koerting, Fig. 217	1-1/2	108.50
WG 502	Schutte and Koerting, Fig. 217	1	66.20
WG 503	Schutte and Koerting, Fig. 217	2	133.00
WG 504	Schutte and Koerting, Fig. 217	2	133.00
WH 500	Schutte and Koerting, Fig. 217	1-1/2	108.50
WH 501	Schutte and Koerting, Fig. 217	1-1/2	108.50
WH 502	Schutte and Koerting, Fig. 217	1	66.20
	Building 604, Collection Tank Cells WM and WL[a]		
WM 500	Schutte and Koerting, Fig. 233	1-1/2	200.00
WM 501	Schutte and Koerting, Fig. 233	1-1/2	200.00
WM 502	Schutte and Koerting, Fig. 233	1-1/2	200.00
WM 503	Schutte and Koerting, Fig. 233	1-1/2	200.00
WM 504	Schutte and Koerting, Fig. 233	1-1/2	200.00
WM 505	Schutte and Koerting, Fig. 233	1-1/2	200.00
WM 507	Schutte and Koerting, Fig. 217	1-1/2	108.50
WM 508	Schutte and Koerting, Fig. 217	1-1/2	108.50
WL 500	Schutte and Koerting, Fig. 233	1-1/2	200.00
WL 501	Schutte and Koerting, Fig. 233	3/4	120.40
WL 502	Schutte and Koerting, Fig. 217	1-1/2	108.50
WL 505	Schutte and Koerting, Fig. 233	1-1/2	200.00
	Waste Tank Farm[a]		
WM 509	Schutte and Koerting, Fig. 233	1-1/2	200.00
WM 510	Schutte and Koerting, Fig. 233	1-1/2	200.00
	Building 604, Waste Evaporator		
WL 503[b]	Foster Wheeler Air Ejector	D(2-1/2)	600.00
WL 504[c]	Schutte and Koerting Special	1/2 flanged	218.60

(a) Jets ordered on Req. ORNL D8-81; Bechtel P.O. 1699-OR-135.
(b) Jet ordered on Req. 542-434F.
(c) Jet ordered on Req. 542-434C.

10.5 Instruments

Because of the inaccessibility of the radioactive equipment, the ICPP liquid waste system has been provided with a system of instruments for indicating, recording, and controlling conditions in areas remote from the operating areas and for actuating alarms in the operating areas when the remote conditions require the attention of operating personnel. These instruments have been grouped on panel board H in the waste collection area of the Process Building and on panel board L in the Waste Disposal Building. The use of multi-pen recorders and multi-point indicators has made it possible for a few of these instruments to present all the required information on the panel boards. Figures 23, p. 76, and 25, p. 84, are photographs of panel boards H and L, respectively. Figures 45, 46, 47, and 48 are drawings showing the layout and identification of all the instruments on panels H and L. Table 38 explains the lettering code identifying instruments. The sections below describe the operation of the instruments and their component parts. A list of all waste system instruments and a detailed list of their components is given in sections 10.5.3 and 10.5.4.

Some locally mounted instruments have been installed in certain areas. These include pressure gauges, sight glasses for indicating liquid level, dial type thermometers, and rotameters for indicating flow.

10.5.1 Pneumatic Instruments for Remote Service

Most of the remote liquid level and density instruments are the pneumatic type, which operate on the pressure differential between the open ends of two tubes conducting a flow of air to different levels in the tank or sump whose contents are to be measured for level or density. For liquid level measurement the high-pressure tube extends to within a fraction of an inch of the vessel bottom, and the low-pressure tube extends inside the vessel to a point above the maximum liquid level. For density measurement the low pressure tube extends to within 10 in. of the end of the high-pressure tube, which extends to the bottom of the vessel. A constant flow (1 ft^3/hr) of dry, filtered air - instrument air - is supplied to the dip tubes from Brooksmite rotameters. The pressure required to maintain the constant air flow through both tubes is proportional to the liquid displaced in the tubes and is transmitted to the instrument for recording the liquid level or density. The use of pressure transmitters near the vessels permits the recorders to be a long distance from the vessels.

The Brooksmite rotameters are mounted in pairs or in groups of four near the transmitters or on the panel boards near the recorders when transmitters are not required. In four-tube units serving level

DWG. 20677

[redacted]

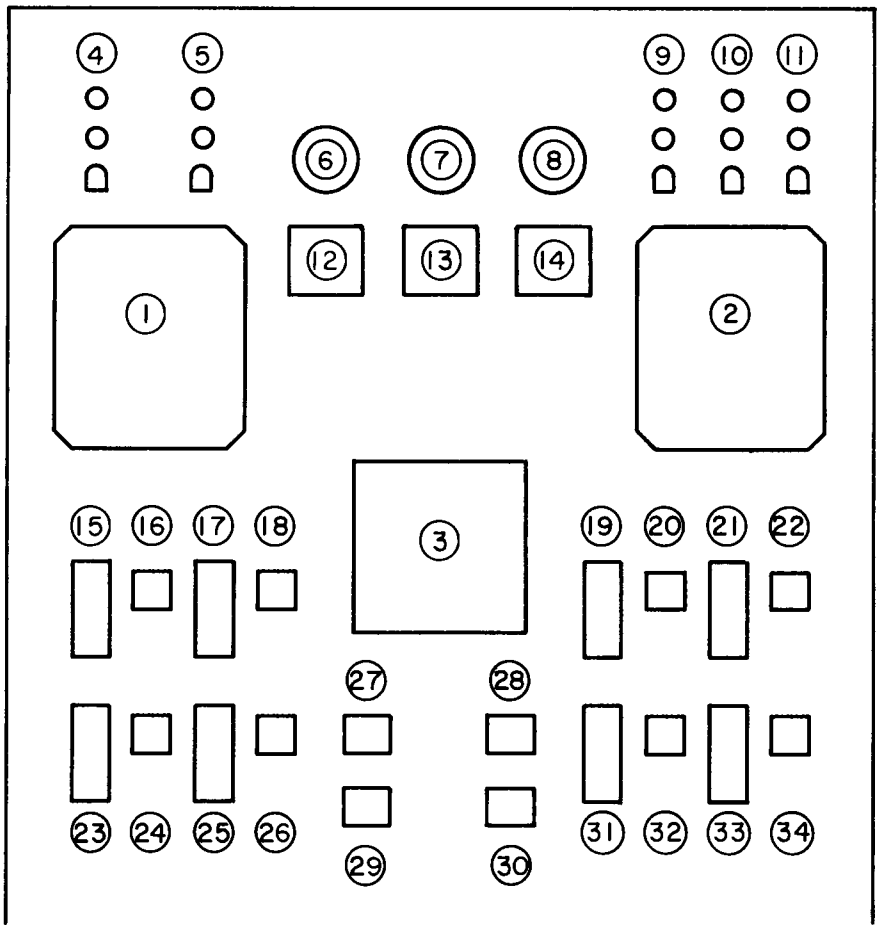

1. Recorder-controller for LRCA-1-1-WG and LRCA-1-2-WG
2. Recorder-controller for LRCA-1-1-WH and LRCA-1-2-WH
3. Indicator for TI-1-1-WG, TI-1-2-WG, TI-1-1-WH, and TI-1-2-WH
4. Unilarms for 1.
5. Unilarm for LIA-1-WG
6. PdI-1-WG
7. PdI-1-WH
8. PdI-2-WH
9. Unilarm for LIA-1-WH
10. Unilarm for LIA-1-WT
11. Unilarms for 2.
12. Brooksmite rotameters for 1
13. Brooksmite rotameters for 6., 7., & 8.
14. Brooksmite rotameters for 2.
15. Switch for WB 200
16. II-1-WB
17. Switch for WC 200
18. II-1-WC
19. Switch for WD 200
20. II-1-WD
21. Switch for WE 200
22. II-1-WE
23. Switch for WG 400
24. II-1-WG
25. Switch for WG 401
26. II-2-WG
27. Air switch for RVC-1-WB
28. Air switch for RVC-1-WC
29. Air switch for RVC-1-WD
30. Air switch for RVC-1-WE
31. Switch for WH 400
32. II-1-WH
33. Switch for WH 401
34. II-2-WH

FIGURE 45

PANEL BOARD H LAYOUT

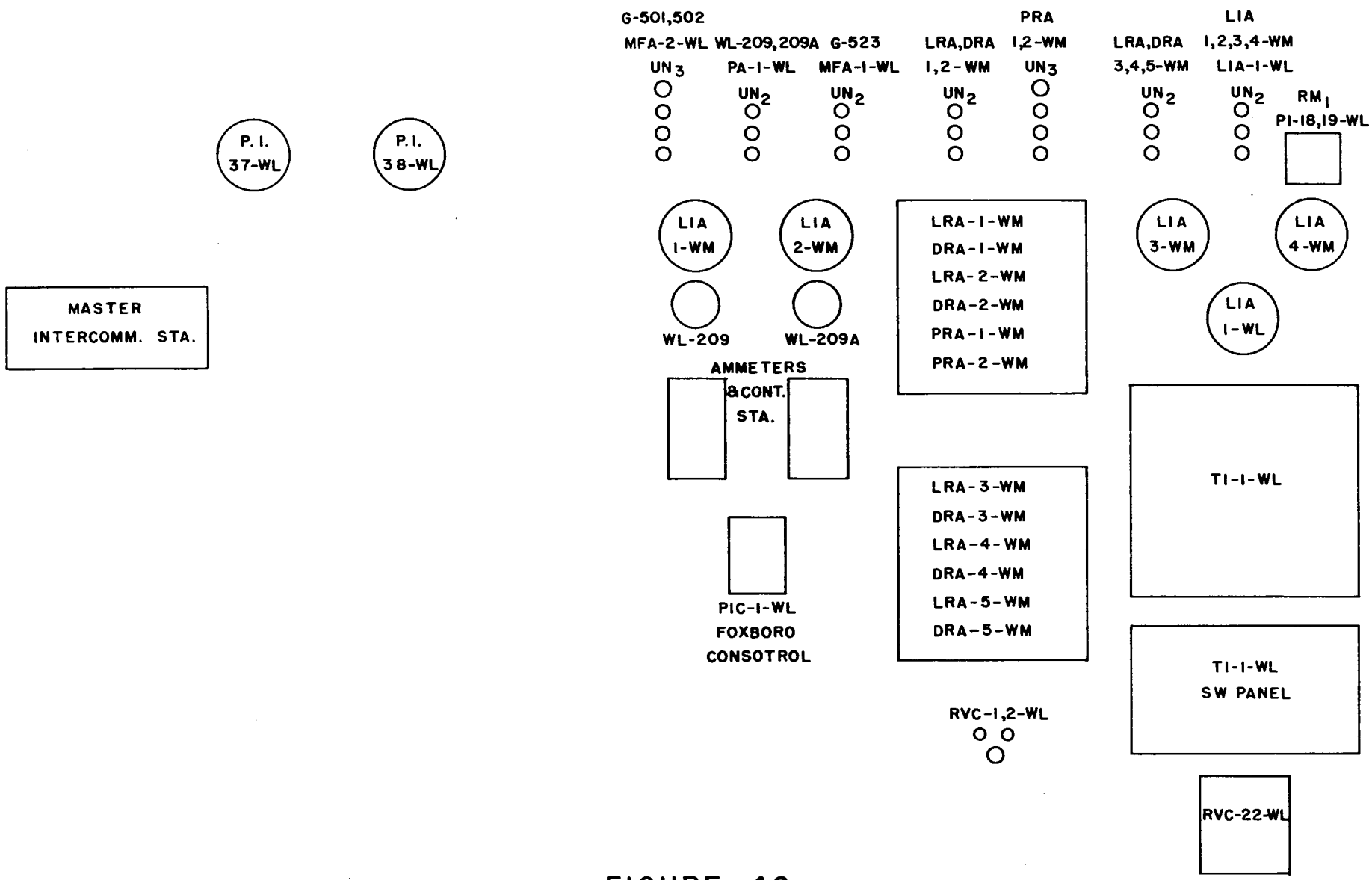

FIGURE 46

PANEL L - NORTH END

EDGE ADJOINING GRAPHIC PANEL

-170-

[redacted]

DWG. 20678

[redacted]

DWG. 20679

[redacted]

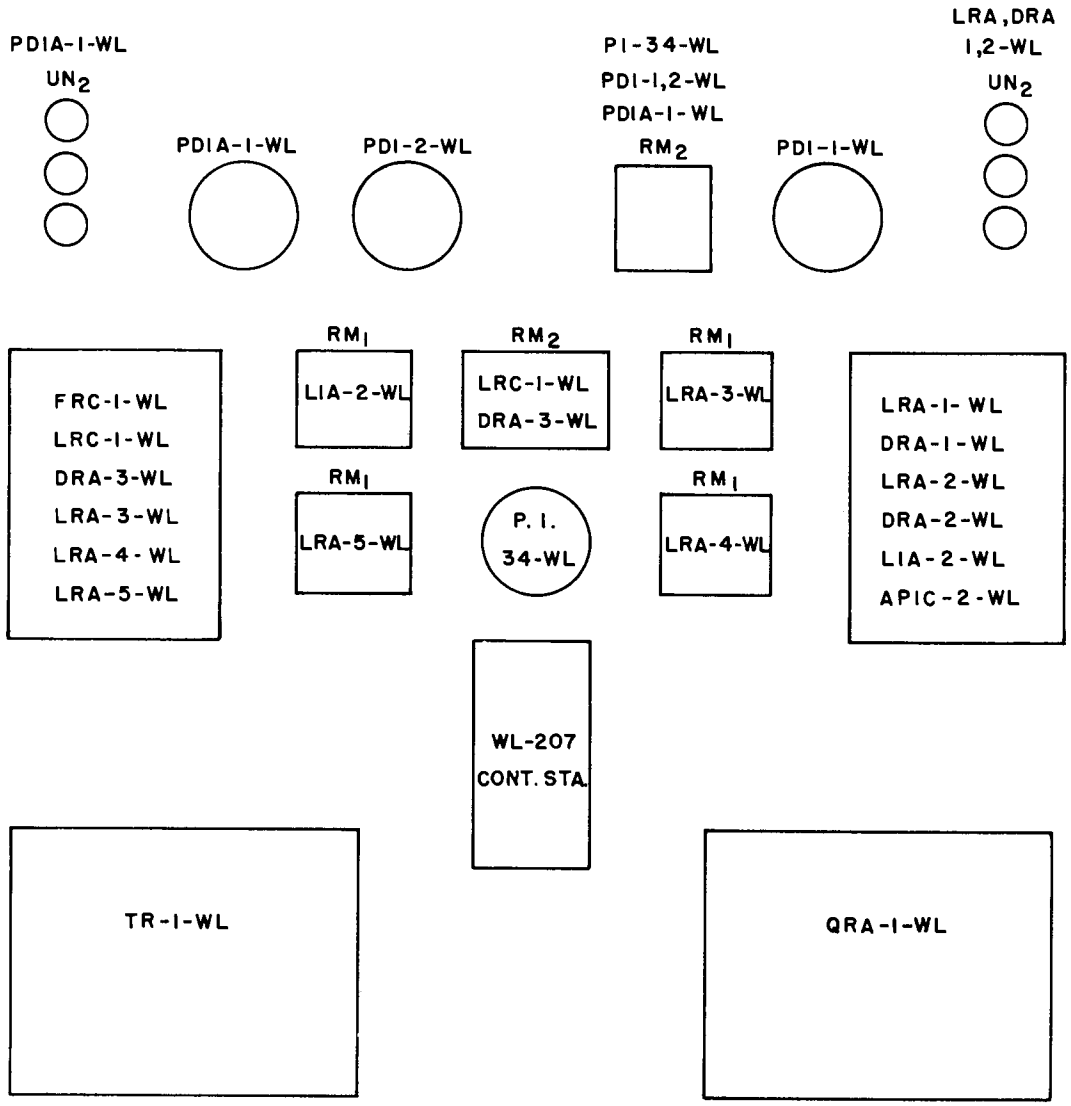

EDGE ADJOINING GRAPHIC PANEL

FIGURE 47

PANEL L - SOUTH END

DWG. 20680

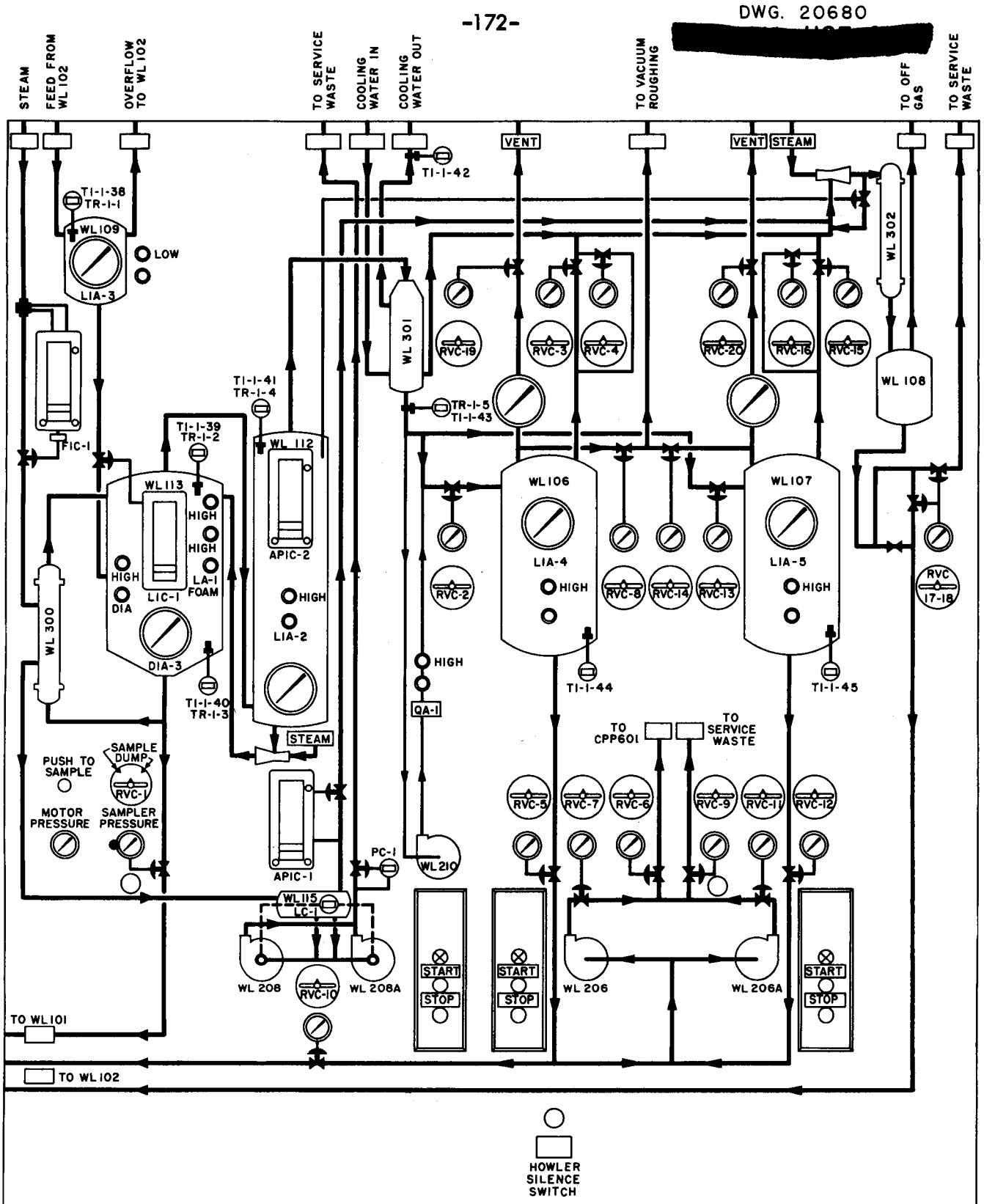

FIGURE 48
ICPP: GRAPHIC PANEL
FOR LIQUID WASTE EVAPORATOR

Table 38

General Instrument Identification Code

First Letter, Process Variable or Actuation	Second and Third Letters												
	Controlling Devices					Measuring Devices		Alarm Devices			Primary Elements	Wells	Glass Devices for Visual Observation
	Recording	Indicating	Blind	Integral Regulating Valves	Safety Valves	Recording	Indicating	Recording	Indicating	Blind			
	RC	IC	C	CV	SV	R	I	RA	IA	A	E	W	G
Flow, F	FRC	FIC	--	---	--	FR	FI	FRA	FIA	-	FE	-	FG
Level, L	LRC	LIC	LC	LCV	--	LR	LI	LRA	LIA	LA	--	-	LG
Pressure, P	PRC	PIC	PC	PCV	PSV	PR	PI	PRA	PIA	PA	PE	-	--
Density, D	DRC	DIC	DC	---	---	DR	DI	DRA	DIA	--	--	-	--
Temperature, T	TRC	TIC	TC	TCV	---	TR	TI	TRA	TIA	TA	TE	TW	--
Weight, W	WRC	WIC	--	---	---	WR	WI	WRA	WIA	--	WE	--	--
Current, I	---	---	--	---	---	--	II	---	---	--	--	--	--
Absolute pressure, A	---	APIC	--	---	---	--	--	---	---	--	--	--	--
Pressure difference, Pd	---	PdI	--	---	---	--	--	---	PdIA	--	--	--	--

and density instruments, the tubes are, from left to right, high-pressure level, low-pressure level, high-pressure density, and low-pressure density. The flow from the Brooksmite rotameters is regulated by a metal needle valve at the outlet of each tube, which is milled from the plastic body of the unit.

A ratio of 2 for upstream/downstream absolute pressures is necessary to maintain constant flow through the rotameters. Because this ratio cannot be maintained above 100 in. head in a vessel (downstream), Conoflow differential pressure relays are required at higher pressures. The Conoflow relay is actuated by the downstream pressure to control the rotameter air supply pressure, thus maintaining a constant pressure drop and flow through the rotameter. A differential pressure of 1.5 psi can be maintained up to a maximum downstream pressure of 13.5 psi, and this ensures a low but constant volume of flow.

A Taylor aneroid recorder is used to measure the differential pressure for the liquid level in the P.E.W. and C.F.D. collection tanks, where the distance between the vessels and the recorder does not require transmitters. The cylindrical body of the aneroid manometer is divided by a bellows into high- and low-pressure chambers, to which the air lines from the vessel dip tubes connect. The bellows connects to a torque tube, which converts the bellows movement with pressure changes into pen movement.

The Foxboro "d/p cell" transmitter is used for the liquid level recorders and other instruments in the Waste Disposal Building, and the Republic pneumatic differential transmitter is used for density recorders. The high- and low-pressure air lines from each waste system vessel connect to opposite sides of a diaphragm in each transmitter. The slight movement of the diaphragm causes movement of a lever with a throttle tip near its end. The throttle tip regulates the flow of output air to the level or density recorder. The transmitters serve as pressure amplifiers, converting pressure differences of several inches of water into output pressures of 3 to 15 psig.

The Dwyer Magnahelic Gauge is used for measuring pressures in the range of 0 to 6 in. of water. The high- and low-pressure lines from the vessels or transmitters connect to opposite sides of a flexible diaphragm, whose movement deflects a cantilevered spring. An Alnico magnet on the end of the spring rotates the gauge pointer.

The Pressuretrol is a pressure-actuated mercury switch, whose function is to actuate an electrical switch by a pressure buildup. The essential parts of the Pressuretrol are a bellows, a mercury switch, electrical contacts, and regulation screws. In operation,

an increase in pressure in the air line expands the bellows, which trips the mercury switch.

The RVC's (remote valve controls) are air-operated diaphragm valves in remote areas. They are actuated by three-way Imperial air switches on the panel boards. These switches have three positions: (1) on, which allows a flow of 50 psig air to open the remote valve, (2) off, and (3) vent, which releases air pressure from the valve diaphragm and allows the valve to close. Pressure gauges on the panel board indicate the air pressure supplied to the valves.

10.5.2 Electrical Instruments for Remote Service

The temperature instruments, certain level instruments, and the alarms for the waste system are electrical. The electrical level instruments are conductivity probes, which are shortcircuited by liquid contacting the probe and the wall of the vessel in which the probe is mounted. The flow of current caused by the short circuit flashes a light on the panel board. This type instrument does not give a quantitative measure of liquid level and is used only where it is desired to know if liquid is present.

Thermocouples are used for remote temperature measurement. Two wires of dissimilar metals (iron and constantan) fused at one end (the hot junction) are connected at the unfused end (cold junction) through a copper lead wire to a millivoltmeter. When the hot junction is heated, an emf is generated approximately proportional to the temperature difference between the hot and cold junctions. Differences in cold-junction temperatures are compensated for in the recording or indicating unit. The thermocouples are protected from corrosive process solutions by embedding in a stainless steel well inserted in the vessel where temperature is to be measured.

The Brown Electronik temperature recorder records the temperature from a number of thermocouples. The emf generated in the thermocouple passes through a fully balanced measuring circuit using the Brown Continuous Balance unit rather than a galvanometer. This balance system is composed of a conversion stage, voltage amplifier, power amplifier, and a balancing motor.

The Unilarm is a two-light alarm unit with a reset button. During normal operation of the equipment to which it is connected, a green light provides a visual signal. Several alarms are connected to a single howler for audible alarm. When abnormal conditions occur, a red light is actuated and the howler sounds. The reset button on the Unilarm shuts off the howler, but the red light continues to shine until the abnormal condition is corrected.

10.5.3 Instrument List

The following tabulation lists all the liquid waste system instruments in the alphabetical order (except for WT 101) of the vessels they serve:

Vessel	Auxiliary Equipment	Instrument
WT 101		LIA-1-WT
	WT 600	PI-1-WT
	WG 503	PI-3-WG
	WG 504	PI-4-WG
Cell WG		PdI-1-WG
WG 100		TI-1-1-WG
		LRCA-1-1-WG
	WB 200	II-1-WB
	WB 200	PI-1-WB
	WB 200	RVC-1-WB
	WB 601	PI-2-WB
	WG 400	II-1-WG
	WG 500	PI-5-WG
	WG 600	PI-1-WG
	Sparger Air and Steam	PI-2-WG
WG 101		TI-1-2-WG
		LRCA-1-2-WG
	WC 200	II-1-WC
	WC 200	PI-1-WC
	WC 200	RVC-1-WC
	WC 601	PI-2-WC
	WC 602	PI-3-WC
	WG 401	II-2-WG
	WG 501	PI-8-WG
	WG 601	PI-6-WG
	Sparger Air and Steam	PI-7-WG
WG 102		LIA-1-WG
	WG 502	PI-9-WG
Cell WH		PdI-2-WH
	Vessel off-gas	PdI-1-WH

Vessel	Auxiliary Equipment	Instrument
WH 100		TI-1-1-WH
		LRCA-1-1-WH
	WD 200	II-1-WD
	WD 200	PI-1-WD
	WD 200	RVC-1-WD
	WD 601	PI-2-WD
	WD 602	PI-3-WD
	WH 400	II-1-WH
	WH 500	PI-2-WH
	WH 600	PI-4-WH
	Sparger Air and Steam	PI-3-WH
WH 101		TI-1-2-WH
		LRCA-1-2-WH
	WE 200	II-1-WE
	WE 200	PI-1-WE
	WE 200	RVC-1-WE
	WE 601	PI-2-WE
	WE 602	PI-3-WE
	WH 401	II-2-WH
	WH 501	PI-5-WH
	WH 601	PI-7-WH
	Sparger Air and Steam	PI-6-WH
WH 102		LIA-1-WH
	WH 502	PI-1-WH
WL 101		TI-1-33-WL
		LRA-1-WL
		DRA-1-WL
	WL 601	PI-1-WL
	Sparger Air and Steam	PI-2-WL
East cell sump		LIA-1-WL
WL 102		TI-1-34-WL
		LRA-2-WL
		DRA-2-WL
	WL 501	PI-3-WL
	WL 506	PI-5-WL
	WL 602	PI-4-WL
	Sparger Air and Steam	PI-6-WL

Vessel	Auxiliary Equipment	Instrument
WL 106		TI-1-44-WL
		LRA-4-WL
		PI-18-WL
		PI-27-WL
		RVC-2-WL
		RVC-3-WL
		RVC-4-WL
		RVC-5-WL
		RVC-8-WL
		RVC-10-WL
		RVC-19-WL
	WL 206	PI-20-WL
	WL 206	RVC-6-WL
	WL 206	RVC-7-WL
	WL 206	RVC-9-WL
	WL 606	PI-28-WL
WL 106 and WL 107	Vacuum Roughing	PI-34-WL
WL 107		TI-1-45-WL
		LRA-5-WL
		PI-19-WL
		PI-25-WL
		RVC-12-WL
		RVC-13-WL
		RVC-14-WL
		RVC-15-WL
		RVC-16-WL
		RVC-20-WL
	WL 206A	PI-21-WL
	WL 206A	RVC-11-WL
	WL 607	PI-26-WL
WL 108		TI-1-46-WL
		RVC-17-WL
		RVC-18-WL
	WL 608	PI-24-WL

Vessel	Auxiliary Equipment	Instrument
WL 109	Sparger Air and Steam	PI-10-WL
		TI-1-38-WL
		TR-1-1-WL
		LRA-3-WL
Condensation cell		PdIA-1-WL
WL 112	Sparger Air and Steam	PI-12-WL
	Spray Steam and Water	PI-31-WL
	Vapor	TI-1-41-WL
	Vapor	TR-1-4-WL
		LIA-2-WL
	Reflux Water	FI-1-WL
		APIC-2-WL
	WL 504	PI-13-WL
Evaporation cell		PdI-2-WL
WL 113	Sparger Air and Steam	PI-11-WL
	Vapor	TI-1-39-WL
	Liquid	TI-1-40-WL
	Vapor	TR-1-2-WL
	Liquid	TR-1-3-WL
		DRA-3-WL
		LRC-1-WL
		LA-1-WL
		RVC-1-WL
		RVC-21-WL
WL 115		LC-1-WL
	WL 208 and WL 208A	PC-1-WL
	WL 208 and WL 208A	PI-15-WL
		PI-16-WL
WL 210		FI-1-WL
		QRA-1-WL
WL 300		FRC-1-WL
		APIC-1-WL
		PI-9-WL

Vessel	Auxiliary Equipment	Instrument
WL 301	Water outlet	TI-1-42-WL
	Condensate outlet	TI-1-43-WL
	Condensate outlet	TR-1-5-WL
	Cooling Water outlet	PI-29-WL
	Cooling Water outlet	PC-2-WL
		RVC-22-WL
WL 302	Cooling Water	PI-30-WL
WL 503		PI-14-WL
WM 100	Sparger Air and Steam	PI-2-WM
	WM 600	PI-1-WM
	Cooling Water outlet	TI-1-35-WL
	Cooling Water outlet	FE-1-WM
		TI-1-30-WL
	Cooling Water to 3 tanks	TIC-1-WM
	Cooling Water to 3 tanks	FE-4-WM
		DRA-3-WM
		LRA-3-WM
	Sump level	LIA-3-WM
WM 101	Sparger Air and Steam	PI-4-WM
	WM 601	PI-3-WM
	Cooling Water outlet	TI-1-36-WL
	Cooling Water outlet	FE-2-WM
		TI-1-31-WL
		LRA-4-WM
		DRA-4-WM
		LIA-4-WM
WM 102	Sparger Air and Steam	PI-6-WM
	WM 602	PI-5-WM
		TI-1-32-WL
	Cooling Water outlet	TI-1-37-WL
	Cooling Water outlet	FE-3-WM
		DRA-5-WM
		LRA-5-WM
WM 180		TI-1 through 10-WL
		DRA-1-WM
		LRA-1-WM
		LIA-1-WM
		PRA-1-WM

Vessel	Auxiliary Equipment	Instrument
WM 181		TI-11 through 20-WL DRA-2-WM LRA-2-WM LIA-2-WM PRA-2-WM
WM 302	Condensate Off-gas Water outlet	TI-1-27-WL TI-1-28-WL TI-1-29-WL RVC-1-WM RVC-2-WM
WM 300	Condensate Off-gas Water outlet	TI-1-23-WL TI-1-22-WL TI-1-21-WL
WM 301	Condensate Off-gas Water outlet	TI-24-WL TI-25-WL TI-26-WL

10.5.4 Instrument Components

The following tabulations are detailed lists of the liquid waste system instruments and their component parts.

Instrument and Tank No.	Instrument Description
Process Building Waste Collection Tanks, Panel Board H	
LIA-1-WT, LIA-1-WG and LIA-1-WH, for sumps WT 101 (pipe trench), WG 102 and WH 102, respectively	Electrode level alarms: 3 required Detector: Single-electrode, type E-1, all-stainless-steel B/W Controller Corp. waterproof electrode holder with 15-in.-long stainless steel electrode; ceramic insulators, polythene cover gasket; 3 required Alarm relays: B/W Controller Corp. type LH normally open induction relay for tap water in contact with detector electrode; dust-tight housing; 3 required (Req. 542-182BF)

Instrument and Tank No.	Instrument Description
Process Building Waste Collection Tanks, Panel Board H, Continued	
	Alarms: Russel and Stoll Model AVT2 two-light Unilarm; light for LIA-1-WT mounted on WF area panel board H; 3 required (Req. 542-184N) Auxiliary equipment: Standard insulation for lead wire in cell conduit Installation sketch: 542-24-C1723
RVC-1-WB, RVC-1-WC, RVC-1-WD, and RVC-1-WE, for casing drains of pumps WB 200, WC 200, WD 200, and WE 200, respectively	Remote valves: Mason-Neilan bellows sealed, bellows operated, air to open, all-stainless-steel type 347, tight shutoff valve with Stellite trim; 1/2 in. pipe size; 50 psi operating air pressure; 4 required (Req. 542-184D) Auxiliary equipment: Three-way air switch Installation sketch: 542-24-C1721
LRCA-1-WG and LRCA-1-WH for LRCA-1-1-WG, LRCA-1-2-WG, LRCA-1-1-WH, LRCA-1-2-WH, serving tanks WG 100, WG 101, WH 100, and WH 101, respectively	Recorders: Two-pen Taylor, 0 to 100 in. water, aneroid type; normal level range 2 to 80 in. of water, maximum 90 in. of water; internal pneumatic high- and low-level air switches to turn pump and alarm on at 80 in. of water and to turn pump off at 2 in. of water; high-level alarm to sound until manually reset when level drops in tank; control mechanism arranged so that pump may be manually started or stopped; 2 required; 7-day chart of 12 in. diameter, 0 to 100 in. range (Reqs. 542-182BX and 542-182BY) Alarm unit: Russel and Stoll model AVT2 Unilarm; 3 required (2 on panel board H plus common Unilarm in operating corridor) (Req. 542-184N) Auxiliary equipment: Shutoff and bypass valves, Brooksmite air purge rotameters. Installation drawings: 542-24-C1737, 542-12-C910, and 542-11-C942

Instrument and Tank No.	Instrument Description
Process Building Waste Collection Tanks, Panel Board H, Continued	
PdI-1-WG, PdI-1-WH, and PdI-2-WH for differential pressure between waste collection cells and vessel off-gas	Draft gauge: Dwyer Magnahelic, range 0 to 4 in. of water differential pressure, flush mounted; normal pressure, 2.0 in. of water; 3 required (Req. 542-183E) Auxiliary equipment: Shutoff and bypass valves, Brooksmite air-purge rotameter Installation drawing: 542-12-C910
TI-1-WG for points TI-1-1-WG, TI-1-2-WG, TI-1-1-WH, TI-1-2-WH, serving tanks WG 100, WG 101, WH 100, and WH 101, respectively	Temperature indicator: Wheelco or equal direct indicating instrument for iron-constantan thermocouples with four-way selector switch; 0 to 150°C range; 1 required (Req. 542-180AF) Auxiliary equipment: Standard thermocouple heads on thermocouple wells, standard insulation on lead wire in cells Installation drawing: 542-11-C942
II-1-WG, II-2-WG, II-1-WH, II-2-WH serving agitators WG 400, WG 401, WH 400, and WH 401, respectively	Current indicator: Triplett (or equal) a-c ammeter for 2-hp agitators on cell tanks; three-phase, 440-volt; 4 required
II-1-WB, II-1-WC, II-1-WD, and II-1-WE serving pumps WB 200, WC 200, WD 200, and WE 200, respectively	Current indicator: Triplett (or equal) a-c ammeter for 5-hp waste pumps; three-phase, 440-volt; 4 required

Instrument and Tank No.	Instrument Description
	Tank Farm Tanks, Panel Board L
LRA-1-WM, DRA-1-WM for tank WM 180, N.E. nozzle; LRA-2-WM, DRA-2-WM, for tank WM 181, S.W. nozzle	Level recorder-alarm: Foxboro transmitter for range of 0 to 375 in. of water (Req. 542-482C), with indicator gauge, Brooksmite rotameter (Req. 542-484F), and Conoflow relay (Req. 542-484AD) in CPP 712; Pressuretrol high-level alarm switch (Req. 542-484Q); Unilarms (common for LRA- and DRA-1-WM and for LRA- and DRA-2-WM; Req. 542-484R) and 6-point 7-day-chart Foxboro recorder in CPP 604 (Req. 542-482E) Density recorder-alarm: Republic transmitter for 10 to 14 in. of water, probe separation of 10.0 in. (Req. 542-482D), with indicator gauge in CPP 712 (Brooksmite rotameters and Conoflow relays are common for LRA's and DRA's); Pressuretrol high-density alarm switch (Req. 542-484Q); Unilarms (common for LRA's and DRA's) and 6-point 7-day-chart Foxboro recorder in CPP 704 (common with LRA's) Installation sketch: 542-44-C1746
Spare instrument dip lines for S.W. nozzle of tank WM 180 and N.E. nozzle of tank WM 181	Brooksmite air-purge rotameters and Conoflow relays are provided in CPP 712 for purging of these lines
PRA-1-WM and PRA-2-WM for tanks WM 180 and WM 181, respectively	Republic transmitter for range of -3 in. of water to 0 to +12 in. of water (Req. 542-482D) for pressure differential between tank (low-pressure level connection) and atmosphere; transmitter and indicator gauge in CPP 712; Mason-Neilan pneumatic sequential pressure alarm switches (Req. 542-483D);Unilarm (3-light, 2 required, Req. 542-484R) and 6-point 7-day-chart Foxboro recorder (common with WM 180 and WM 181 LRA's and DRA's in CPP 604)

Instrument and Tank No.	Instrument Description
Tank Farm Tanks, Panel Board L, Continued	
LIA-1-WM and LIA-2-WM for WM 180 and WM 181 enclosure sumps, respectively	Foxboro transmitter for 0 to 100 in. of water (Req. 542-482C), with indicator gauge and Brooksmite rotameters (Req. 542-484F) in CPP 712; Pressuretrol alarm switches (Req. 542-484Q), board-mounted indicator gauge (Req. 542-482J), and common Unilarm in CPP 604 (Req. 542-484R) Installation sketch: 542-44-C1751
TI-1-WL, for WL and WM area temperature indication	48-point Brown temperature indicator (Req. 542-480A); iron-constantan thermocouple (Req. 542-480E), range 0 to 125°C; radiation-resistant thermocouple lead wire from WM 180 and WM 181 to CPP 712 and for tanks WM 100, WM 101, and WM 102; standard lead for all other thermocouples; 1 required

Point	Tank	Nozzle	Temperature Determined
TI-1-1-WL	WM 180	SW-1	Tank
TI-1-2-WL	WM 180	SW-2	Tank
TI-1-3-WL	WM 180	SW-3	Tank
TI-1-4-WL	WM 180	SW-4	Tank
TI-1-5-WL	WM 180	SW-5	Tank
TI-1-6-WL	WM 180	NE-1	Tank
TI-1-7-WL	WM 180	NE-2	Tank
TI-1-8-WL	WM 180	NE-3	Tank
TI-1-9-WL	WM 180	NE-4	Tank
TI-1-10-WL	WM 180	NE-5	Tank
TI-1-11-WL	WM 181	SW-1	Tank
TI-1-12-WL	WM 181	SW-2	Tank
TI-1-13-WL	WM 181	SW-3	Tank
TI-1-14-WL	WM 181	SW-4	Tank
TI-1-15-WL	WM 181	SW-5	Tank
TI-1-16-WL	WM 181	NE-1	Tank
TI-1-17-WL	WM 181	NE-2	Tank
TI-1-18-WL	WM 181	NE-3	Tank
TI-1-19-WL	WM 181	NE-4	Tank
TI-1-20-WL	WM 181	NE-5	Tank
TI-1-21-WL	WM 300	On pipe line	Outlet water
TI-1-22-WL	WM 300	On pipe line	Off-gas
TI-1-23-WL	WM 300	On pipe line	Condensate

Point	Tank	Nozzle	Temperature Determined
TI-1-24-WL	WM 301	On pipe line	Outlet water
TI-1-25-WL	WM 301	On pipe line	Off-gas
TI-1-26-WL	WM 301	On pipe line	Condensate
TI-1-27-WL	WM 302	On pipe line	Outlet water
TI-1-28-WL	WM 302	On pipe line	Off-gas
TI-1-29-WL	WM 302	On pipe line	Condensate
TI-1-30-WL	WM 100	32	Tank
TI-1-31-WL	WM 101	32	Tank
TI-1-32-WL	WM 102	32	Tank
TI-1-33-WL	WL 101	32	Tank
TI-1-34-WL	WL 102	32	Tank
TI-1-35-WL	WM 100	Line 1-1/2PWM4006L	Outlet cooling water
TI-1-36-WL	WM 101	Line 1-1/2PWM60111L	Outlet cooling water
TI-1-37-WL	WM 102	Line 1-1/2PWM60213L	Outlet cooling water
TI-1-38-WL	WL 109	10	Tank
TI-1-39-WL	WL 113	9	Vapor
TI-1-40-WL	WL 113	5	Liquid
TI-1-41-WL	WL 112	12	Vapor
TI-1-43-WL	---	Line 3" PWL2064C	Condensate
TI-1-42-WL	---	Line 3" PWL6123L	Exit cooling water
TI-1-44-WL	WL 106	7	Tank
TI-1-45-WL	WL 107	9	Tank
TI-1-46-WL	WL 108	8	Condensate
TI-1-47,48-WL	Spares		

RVC-1-WM and RVC-2-WM, for condenser WM 302	Remote valve controls (Req. 542-484C) Installation sketch: 542-44C and 759

Instrument and Tank No.	Instrument Description
Waste Disposal Building Collection Tanks, CPP 604, Panel Board L	
LRA-3-WM and DRA-3-WM, for tank WM 100; LRA-4-WM and DRA-4-WM for tank WM 101; LRA-5-WM and DRA-5-WM for tank WM 102; LRA-1-WL and DRA-1-WL for tank WL 101;	First three LRA's and DRA's on Req. 542-482F; last two on Req. 542-482G Level-recorder alarm: Foxboro transmitter for range of 0 to 160 in. water (Req. 542-482C); transmitter with indicator gauge, Brooksmite rotameter (Req. 542 484F), and Conoflow relay (Req. 542-484AD) in sampling corridor; Pressuretrol high-level alarm switch (Req. 542-484Q); Unilarms (one per tank for LRA and DRA; Req. 542-484R) and two 6-point 7-day-chart Foxboro recorders in operating gallery

Instrument and Tank No.	Instrument Description
Waste Disposal Building Collection Tanks, CPP 604, Panel Board L, Continued	
LRA-2-WL and DRA-2-WL for tank WL 102	Density recorder-alarm: Republic transmitter for range of 10 to 14 in. of water (Req. 542-482D); probe separation 10.0 in.; transmitter with indicator gauge in sampling corridor (Brooksmite rotameters and Conoflow relays common for LRA's); Pressuretrol high-density alarm switch (Req. 542-484Q); Unilarms (common for LRA's and DRA's) and two 6-point 7-day-chart Foxboro recorders in operating gallery (common for LRA's and DRA's) Spare instrument leads into tanks are to be piped into sampling corridor but not purged Installation sketch: 542-44-C1750
LIA-3-WM for WM 100 enclosure sump; LIA-4-WM for WM 100 and WM 102 enclosure sump; and LIA-1-WL for WL 101 and WL 102 enclosure sump	Foxboro transmitter for range 0 to 100 in. of water (Req. 542-482C); transmitter with indicator gauge and Brooksmite rotameters in sampling gallery; Pressuretrol alarm switches (Req. 542-484Q), board-mounted indicator gauge (Req. 542-482J), and common Unilarm (Req. 542-484R) in operating gallery. Installation sketch: 542-44-C1751
FE-1-WM for line 1-1/2 in. PWM 4006L; FE-2-WM for line 1-1/2 in. PWM60111L; FE-3-WM for line 1-1/2 in. PWM 60213L; FE-4-WM for line 1 in. PWM60213L	FE-1, 2, 3-WM for water at 105°F, 22 gal/min; FE-4-WM for water at 55°F, 2 gal/min Test orifices (FE-1, 2, 3-WM): Type 304 stainless steel orifice plates and carbon steel orifice flanges (Req. 542-481F and G) Flow restriction (FE-4-WM): Type 304 stainless steel orifice plate and carbon steel orifice flanges (Req. 542-481F); approximately 10 psi pressure drop across orifice plate

Instrument and Tank No.	Instrument Description
Waste Disposal Building Collection Tanks, CPP 604, Panel Board L, Continued	
TIC-1-WM, tempered water control for tanks WM 100, WM 101, and WM 102	Controller: Taylor Fulscope indicating temperature controller (Req. 542-480B); range 0 to 110°C, mercury actuated with 5-ft apparatus tubing and No. 25 union connection bulb with separable well; face mounted, full range sensitivity, reverse acting controller; control point approximately 43°C Valve: Maximum flow approximately 66 gal/min of 55°F water at approximately 10 psi pressure drop; steel body, stainless steel trim, air to close valve (Req. 542-480C)
PC-2-WL, for condenser WL 301 outlet water	Back-pressure regulator valve for 70 to 136 gal/min of 95°F water; back-pressure setting adjustable in range 35 to 50 psi; flanged steel body, stainless steel trim, spring-loaded valve; Mason Neilan No. 36 or equal (Req. 542-483K) Installation sketch: 542-24-C1742
Waste Evaporator, Graphic Panel Board	
PdIA-1-WL for off-gas header for CPP 604 Building	Dwyer draft gauge (Req. 542-483S) for 0 to 4 in. of water differential pressure, flush mounting, back-connected Magnehelic gauge; differential between off-gas header and operating area; Dwyer differential-pressure-actuated alarm switch, 0 to 4 in. of water differential range, switch to break at about 1 in. of water differential pressure on differential decrease; Brooksmite rotameter (4 tube) and Unilarm (Req. 542-484R)

Instrument and Tank No.	Instrument Description
Waste Evaporator, Graphic Panel Board, Continued	
PdI-1-WL and PdI-2-WL, for waste evaporation and condensation cells	Dwyer draft gauges (Req. 542-483S) for 0 to 2 in. of water differential pressure, flush mounting, back-connected Magnehelic gauges; differential between cells and operating area; Brooksmite rotameter (common with PdIA-1-WL)
FRC-1-WL, steam flow orifice and valve for reboiler WL 300	Transmitter: Foxboro transmitter for 50 in. of water; differential range for 3500 to 4000 lb of steam per hour at 314°F, 3 to 15 psi output; locally mounted transmitter with 0 to 40 square root indicating gauge; type 304 stainless steel orifice plate (Req. 542-481C) Recorder: 6-point Foxboro pneumatic recorder-receiver, 0 to 100 uniform chart (Req. 542-482H and 542-484L) Controller: Miniature indicating pneumatic receiver-controller, 0 to 40 square root indicating scale and 3 to 15 psi output; with adjustable sensitivity, automatic reset,and 4-position transfer valve; controller mounted on graphic board diagram as FIC-1-WL Control Valve: Fisher air to open control valve with forged steel body, stainless steel trim and teflon packed stem, 3500 to 4000 lb/hr steam at 39.2 to 10 psi pressure drop (Req. 542-481B) Installation sketch: 542-44-C1747
LRC-1-WL and DRA-3-WL, for tank WL 113	Foxboro transmitter for range of 0 to 80 in. of water, transmitter with indicator gauge, Brooksmite rotameter, and Conoflow relay (Req. 542-484AD) in operating gallery; Merriam check valves on lines to tank (Req. 542-482C)

Instrument and Tank No.	Instrument Description
Waste Evaporator, Graphic Panel Board, Continued	
	Level recorder: 6-point Foxboro pneumatic receiver-recorder (common with FRC-1-WL)
	Level controller: Miniature indicating pneumatic receiver-controller, 0 to 100% indicating scale and 3 to 15 psi output; with adjustable sensitivity, 4-position transfer valve, and automatic reset; controller mounted on graphic board diagram as LIC-1-WL (Req. 542-482A)
	Control valve: All-stainless-steel, bellows sealed, diaphragm-operated control valve for 5.3 (normal) to 10.6 gal/min of fluid; air to open (Req. 542-482B)
	Density transmitter: Republic transmitter for range of 10 to 14 in. of water (Req. 542-482D); probe separation 10.0 in.; transmitter with indicator gauge, Brooksmite rotameter (common with LRC-1-WL), and Conoflow relay in operating gallery; Merriam check valves on line to tank (Req. 542-482D)
	Density recorder: 6-point Foxboro pneumatic receiver-recorder (common with FRC-1-WL)
	Density indicator and alarm: 0 to 100% indicator gauge (3.5 in. diameter) with alarm light and common Unilarm mounted in graphic diagram as DIA-3-WL; Pressuretrol high-density alarm switch
	Installation sketch: 542-44-C1748
LA-1-WL, for tank WL 113	Electrodes: Stainless steel special electrode holders with teflon insulators, electrodes are approximately 3 ft and 5 ft long (Req. 542-482L)
	Relays: B/W Controller Corp. induction relays for tap water in contact with electrodes (Req. 542-482K)

Instrument and Tank No.	Instrument Description
Waste Evaporator, Graphic Panel Board, Continued	
	Indicator and alarm: Indicator lights (Req. 542-484L) to indicate liquid contact with electrodes; alarm (common Unilarm for graphic board (Req. 542-484N) on liquid contact with 5 ft electrode; lights and alarm mounted in graphic diagram as LA-1-WL
LRA-3-WL, for tank WL 109	Transmitter: Foxboro transmitter for range of 0 to 60 in. of water (Req. 542-482C); transmitter with indicator gauge and Brooksmite rotameter in operating gallery Recorder: 6-point Foxboro pneumatic receiver-recorder (common with FRC-1-WL) Indicator and alarm: 0 to 100%, 3.5-in.-diameter indicator gauge (Req. 542-484L), alarm light, and common Unilarm (Req. 542-484N), mounted in graphic diagram as LIA-3-WL; Pressuretrol low-level alarm switch (Req. 542-484Q) Installation sketch: 542-44-C1747
LIA-2-WL, for bubble-cap tower WL 112	Transmitter: Foxboro transmitter for range of 0 to 60 in. of water (Req. 542-482C); transmitter with indicator gauge, Brooksmite rotameter, and Conoflow relay (Req. 542-484AD) in operating gallery; Merriam check valves on lines to tank Recorder: Common with LRA-1-WL (Req. 542-482G) Indicator and alarm: 0 to 100%, 3.5-in.-diameter indicator gauge (Req. 542-484L), alarm light and common Unilarm (Req. 542-484N) mounted in graphic diagram as LIA-2-WL; Pressuretrol high-level alarm switch (Req. 542- 484 Q) Installation sketch: 542-44-C1753

Instrument and Tank No.	Instrument Description
Waste Evaporator, Graphic Panel Board, Continued	
LRA-4-WL for tank WL 106 and LRA-5-WL for tank WL 107	Transmitters: Foxboro transmitters for range of 0 to 144 in. of water (Req. 542-482C); transmitters with indicator gauges, Brooksmite rotameters, and Conoflow relays (Req. 542-484AD) in operating gallery; Merriam check valves on lines to tank Recorder: 6-point Foxboro pneumatic recorder-receiver (common with FRC-1-WL; Req. 542-482H) Indicator and alarm: 0 to 100%, 3.5-in.-diameter indicator gauges (Req. 542-484L), alarm lights and common Unilarm (Req. 542-484N) mounted in graphic diagram as LIA-4-WL and LIA-5-WL Installation sketch: 542-44-C1747
APIC-1-WL, absolute pressure controller and valve for tank WL 115 vent line	Transmitter: Absolute pressure transmitter for range 0 to 40 psia; type 347 stainless steel bellows with all-stainless-steel parts on process fluid side; transmitter, indicator gauge, and air set locally mounted in access corridor; 3 to 15 psi output. Brooksmite rotameter and Conoflow relay air-purge assembly (Req. 542-483C) Controller: Miniature indicating pneumatic receiver-controller, 0 to 100% indicating scale, adjustable sensitivity, automatic reset, and 4-position transfer valve; increase in pressure to increase output air pressure; controller mounted in graphic diagram as APIC-1-WL; controller regulates heating steam pressure in reboiler Control valve: Forged steel body, stainless steel trim, teflon-packed stem, air to open control valve (Req. 542-483B) Installation sketch: 542-44-C1755

Instrument and Tank No.	Instrument Description
Waste Evaporator, Graphic Panel Board, Continued	
APIC-2-WL, absolute pressure controller for evaporator vessels	Transmitter: Absolute pressure transmitter for range of 0 to 15 psia; type 347 stainless steel bellows with all-stainless-steel parts on process fluid side; transmitter, indicator gauge, air set, Brooksmite rotameter, and Conoflow relay air-purge assembly locally mounted near transmitter (Req. 542-483Z) Recorder: Common with LRA-1-WL (Req. 542-482G) Controller: Miniature indicating pneumatic receiver-controller, 0 to 100% indicating scale, adjustable sensitivity, automatic reset, and 4-position transfer valve; increase of pressure to increase output air pressure; controller mounted in graphic diagram as APIC-2-WL; controller regulates vessel pressure by controlling evacuation jet bypass (Req. 542-484L) Control valve: Stainless steel body and trim, teflon-packed stem, air to close control valve (Req. 542-483M) Installation sketch: 542-44C1755
PC-1-WL, for pumps WL 208 and 208A discharge line	Pilot-operated back-pressure regulator valve for 13.6 to 17 gal/min of 175°F water at 2.3 to 32.8 psi pressure drop; back pressure adjustable from 20 to 45 psia; forged steel body, stainless steel trim, teflon-packed stem control valve; Fisher No. 4100S-567 or equal, 0 to 60 psi, bronze bourdon tube, adjustable range, air pilot with air set; pilot locally mounted (Req. 542-483J, control valve) Controller: Mason Neilan, type 2707 (Req. 542-483G) Installation sketch: 542-24C1742

Instrument and Tank No.	Instrument Description
Waste Evaporator, Graphic Panel Board, Continued	
LC-1-WL for tank WL 115	Locally mounted, float-actuated pump motor switch; controller alternately operates pumps WL 208 and WL 208A; symbol only in graphic diagram
QRA-1-WL	Radioactivity recorder alarm consisting of process fluid circulating pump WL 210 (pump switch mounted on graphic diagram), flow indicator (rotameter) with regulating valves, ionization chamber for flowing process fluid, amplifiers, and Brown recorder; rotameter, ionization chamber, amplifiers, and recorder in separate housing; alarm lights and connection to common Unilarm (Req. 542-484N) mounted in graphic board diagram; alarm to be actuated by increase of activity level
PI-18-WL for tank WL 106 and PI-19-WL	Board-mounted (in graphic board), 0 to 30 in. of Hg vacuum, 3.5-in.-diameter bourdon tube pressure gauges; air purge required (Req. 542-484L) Installation sketch: 542-44C1760
RVC-1-WL and RVC-21-WL for tank WL 113 drains	All-stainless-steel, bellows sealed diaphragm operated, tight shutoff, air to open, control valves with water flush line to bellows For RVC-1-WL, valve control (mounted in graphic diagram) to be special unit with air switch, two indicator gauges, pressure reducer, and push button air switch; control designed for sampling and dumping evaporator contents; dump control provided with safety lock (Req. 542-484E, control valve) For RVC-21-WL, Req. 542-484AA Installation sketch: 542-44C1758

Instrument and Tank No.	Instrument Description
Waste Evaporator, Graphic Panel Board, Continued	
RVC-2 through 18-WL	Remotely controlled, diaphragm operated, teflon-packed stem, tight shutoff, all-stainless-steel valves; controls arranged so that valves are operated from graphic board diagrams; RVC-9-WL is for throttling, all others are for off-on service (Req. 542-484D) Installation sketch: 542-24C1754
RVC-19-WL, RVC-20-WL, RVC-22-WL	Remotely controlled, diaphragm operated, teflon-packed stem, soft seat, bronze body valves; RVC-19-WL and RVC-20-WL are off-on tight shut-off valves for WL 106 and WL 107, respectively, and controls are arranged for operation from graphic panel board (Req. 542-481AB); RVC-22-WL is throttling valve for condenser WL 301 cooling water outlet (Req. 542-484Y and Z) Installation sketch: 542-44C1759
TR-1-WL, for WL area temperature recording	6-point Brown temperature recorder; iron-constantan thermocouple, 0 to 125°C; standard thermocouple lead wires for all points; all points connected in parallel with TI-1-WL points (Req. 542-480G)

Point	Tank	TI-1-WL Point	Service
TR-1-1-WL	WL 109	TI-1-38-WL	Tank temperature
TR-1-2-WL	WL 113	TI-1-39-WL	Vapor temperature
TR-1-3-WL	WL 113	TI-1-40-WL	Liquid temperature
TR-1-4-WL	WL 112	TI-1-41-WL	Vapor temperature
TR-1-5-WL	Line 3 in. PWL2064C	TI-1-43-WL	Condensate temperature
TR-1-6-WL	---	---	Spare

FI-1-WL, rotameter for WL 112 reflux	(Req. 542-481E)

Instrument and Tank No.	Instrument Description
Waste Evaporator, Graphic Panel Board, Continued	
PIC-1-WL, for CPP 604 off-gas to filter	Foxboro Consotrol indicating controller (Req. 542-483E) mounted on Panel L, range -5 to 0 in. of water; bronze pressure element; Fisher control valve (Req. 542-483F) type 304 stainless steel body; type 316 stainless steel trim; teflon-sealed packing; differential pressure transmitter (Req. 542-483P)
PI-1 through 16-WL, PI-20, 21-WL, PI-24 through 33-WL, PI-35, 36-WL	Crosby types AAO, AIO, and ASO pressure gauges (Req. 542-483Q)
PI-34, 37, 38-WL	Helicord square flush case, phosphor bronze tube, bronze socket (Req. 542-483R)

10.6 Specifications and Calculations

10.6.1 Activity Calculations for First Cycle Aqueous Raffinate Concentrate

The following tabulation gives the activity data for first cycle aqueous raffinate:

	NP	MTR
Total beta curies per gram of U^{235} in fuel[a]	33.6	221
U^{235} concentration of first cycle feed (g/liter)	2.3	0.994
Volume ratio of feed to raffinate	4/5	0.794/1
Volume ratio of raffinate to raffinate concentrate from first cycle evaporation	1.5/1	1.5/1

(a) From Table II of IDO-26058-ORNL; other data from CF-51-6-53.

The total beta activity in first cycle aqueous raffinate concentrate is found by multiplying the above factors as follows:

NP

$$33.6 \times 2.3 \times 4/5 \times 1.5 = 92.7 \text{ curies/liter, which is}$$

$$92.7 \times 2.2 \times 10^{11} \times 10^{-3} = 2.0 \times 10^{10} \ \beta c/m/ml$$

MTR

$$221 \times 0.994 \times 1.5 = 263 \text{ curies/liter, which is}$$

$$263 \times 2.2 \times 10^{11} \times 10^{-3} = 5.75 \times 10^{10} \ \beta c/m/ml$$

10.6.2 Activity Calculations for Second and Third Cycle Raffinate Concentrate

The following tabulation gives the activity data for second and third cycle aqueous raffinate:

	NP	MTR
Total beta curies per gram of U^{235} in fuel[a]	33.6	221
Fuel processed (grams of U^{235} per day)	3520	2860
First cycle extraction design decontamination factor	1×10^4	1×10^4
Volume of second and third cycle aqueous raffinate concentrate (liters/day)	263	204

(a) From Table II of IDO-26058-ORNL; other data from CF-51-6-53.

The total beta activity in second and third cycle aqueous raffinate concentrate is found from multiplying and dividing the above factors as follows:

NP

$$33.6 \times 3520 = 1.18 \times 10^5 \ \beta \text{ curies/day in feed, which yields}$$

$$\frac{1.18 \times 10^5}{1 \times 10^4} = 11.8 \text{ curies/day in second and third cycle raffinate concentrate}$$

$$\frac{11.8 \times 2.2 \times 10^{11}}{263 \times 10^{3}} = 1 \times 10^{7}\ \beta c/m/ml$$

MTR

$221 \times 2860 = 6.3 \times 10^{5}\ \beta$ curies/day in feed, which yields

$\frac{6.3 \times 10^{5}}{1 \times 10^{4}} = 63.0$ curies/day in second and third cycle raffinate concentrate

$$\frac{63.0 \times 2.2 \times 10^{11}}{204 \times 10^{3}} = 5.8 \times 10^{7}\ \beta c/m/ml$$

10.6.3 Sparger Calculations

From data given in Perry's "Chemical Engineers' Handbook" (3d ed, p. 1177), it may be calculated that complete sparging of a 9-ft-diameter vertical cylindrical tank requires an air flow of 1.3 ft^3/min per square foot of tank area. This value seems excessive, however, for the projected area of a horizontal cylindrical tank.

a. For P.E.W. and C.F.D. (Horizontal) Collection Tanks WG 100, WG 101, WH 100, and WH 101. Each tank is 9 ft in diameter and 9 ft long; the area of the surface of the liquid in the tank when the tank is half full (maximum area) is therefore approximately 81 ft^2. The air required for sparging is thus

$$81 \times 1.3 = 105\ ft^3/min$$

For sparger design it is convenient to have sixteen 3/32-in.-diameter holes plus one 1/8-in.-diameter weep hole. According to Kent's "Mechanical Engineers' Handbook" (11th ed, pp. 1-13), the air flow through an orifice is found by

$$W = 0.53\ A\ (P/\sqrt{T})$$

where

W = air flow in pounds per second

A = orifice area in square inches = 0.069 $in.^2$ for a 3/32-in. hole and 0.0123 $in.^2$ for a 1/8-in. hole

P = absolute pressure in pounds per square inch = 40 + 12.2 psia, assuming a 10-psi drop from header to tank

T = absolute temperature in Fahrenheit degrees = 460 + 70 = 530°F

This equation gives W = 0.0083 lb/sec for one 3/32-in.-orifice; converting to standard cubic feet per minute,

$$W = 0.0083 \times 60/0.0807 = 6.2 \text{ ft}^3/\text{min}$$

For sixteen 3/32-in. orifices,

$$W = 99 \text{ ft}^3/\text{min}$$

For the 1/8-in. orifice, the equation gives

$$W = 0.0148 \text{ lb/sec} = 11 \text{ ft}^3/\text{min}$$

The total flow for these spargers is thus 110 ft^3 of air per minute, which compares satisfactorily with the recommended value of 105.

b. For (Horizontal) Raffinate Collection Tanks WM 100, WM 101, WM 102, and WL 101 and Evaporator Surge Tank WL 102. Each tank is 10 ft in diameter and 30 ft long; the area of the surface of the liquid in the tank when the tank is half full (maximum area) is therefore approximately 300 ft^2. The air required for sparging is thus

$$300 \times 1.3 = 390 \text{ ft}^3/\text{min}$$

For sparger design, it is assumed that there are forty 3/32-in.-diameter holes plus two 1/8-in. weep holes. Then,

$$W = 248 \text{ ft}^3/\text{min for the forty 3/32-in. orifices}$$

$$W = 22 \text{ ft}^3/\text{min for the two 1/8-in. orifices}$$

The total air flow is then 270 ft^3/min, which is lower than the 390 ft^3/min recommended. Since the recommended value is probably higher than that required for horizontal tanks, the sparger design was not changed from the assumed value.

10.6.4 Preliminary Calculations on Cooling Coil Design for Tanks WM 100, WM 101, and WM 102 (CF-52-2-207 and 51-6-12)

The following calculations concern the determination of heat transfer area and the proper spacing of cooling coils for these tanks, which

are 10 ft in diameter and 30 ft long.

Volume = 17,600 gal

Rate of energy release = 12 Btu/hr/gal at 120 days after reactor discharge

Overall transfer coefficient, U, to water = 15 Btu/hr/ft^2/$^\circ$F

Cooling water enters at 90°F and leaves at 110°F (temperature change of 20°F); tank temperature to be held at 160°F

$$\Delta T = \frac{(160 - 90) - (160 - 110)}{\ln \frac{160 - 90}{160 - 110}} = 60^\circ F$$

Thus,

Total heat released, Q, = 17,600 x 12 = 204,000 Btu/hr

Cooling water required to hold tank at 160°F = $\frac{204,000}{20 \times 8.33 \times 60}$

= 21.2 gal/min

a. Length of coil required:

From the relation $Q = UA\Delta T$, the required area, A, of the cooling pipe in square feet is calculated:

$$\text{Area} = \frac{204,000}{15 \times 60} = 227 \text{ ft}^2$$

The length of 1-in.-diameter pipe required to provide this area is:

$$\text{Length} = 227 \times 2.904 = 660 \text{ ft}$$

Assuming that the length of a coil in a 30-ft tank would be 28 ft, the number of passes of pipe would be

$$\text{No. of passes} = 660/28 = 26$$

A convenient arrangement of the coils would be two banks of coils, with 13 parallel passes in each bank (but see Sect. b).

b. Position of coils in tank:

Case I: Air cooling for half, water cooling for half; assume first row of tubes is 15 in. above tank bottom

$$\text{Cross section area of liquid} = 2r^2 \left(\frac{\theta}{2} - \frac{\sin\theta \ \cos\theta}{2} \right)$$

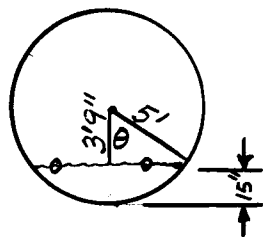

$$\cos\theta = 3.75/5; \ \theta = 0.723 \text{ radian}$$

$$\text{area of liquid cross section} = 2r^2 \left(\frac{\theta}{2} - \frac{\sin\theta \ \cos\theta}{2} \right)$$

$$= 50(0.3615 - 0.248) = 5.68 \text{ ft}^2$$

Volume of D-shaped section = $(5.68 \text{ ft}^2)(31 \text{ ft})(7.48 \text{ gal/ft}^3) = 1318$ gal

Heat release = 1318 gal x 12 Btu/hr/gal = 15,810 Btu/hr

Assume overall heat transfer to air = U = 0.1 Btu/hr/ft^2/$^\circ$F

Surface area of tank in contact with liquid = (length)(fraction of perimeter)

$$= (30 \text{ ft})(2 \times 5 \times 0.723 \text{ ft}) = 217 \text{ ft}^2$$

Assume one-half of heat is transferred to surrounding air and calculate required ΔT_m:

$$\Delta T_m = \frac{q}{UA} = \frac{15{,}810}{2 \times 0.1 \times 217} = 364^\circ\text{F}$$

This assumption is not valid since the calculated ΔT_m is too great. When liquid level is below bottom coils, air cooling could not handle the heat load.

Case II: Air cooling plus water cooling of tank: assume first row of tubes 12 in. from bottom of tank.

$$\cos\theta = 4/5;\ \theta = 0.642 \text{ radian}$$

Area of liquid cross section $= (2)(25)\left(\frac{0.642}{2} - \frac{3 \times 4}{2 \times 5 \times 5}\right) = 4.05\ ft^2$

Volume $= 4.05\ ft^2 \times 30\ ft \times 7.48\ gal/ft^3 = 909\ gal$

Heat release $= 909\ gal \times 12\ Btu/hr/gal = 10{,}900\ Btu/hr$

Surface of tank wetted by liquid = (length of arc)(length of tank)

$= (2 \times 5 \times 0.642\ ft)(30\ ft) = 192.6\ ft^2$

Heat lost to atmosphere $= UA\Delta T_m = (0.1)(192.6)(80) = 1540\ Btu/hr$

Air is assumed to be at 80^oF; $\Delta T = 160 - 80 = 80^oF$

Net heat picked up by water $= 10{,}900 - 1540 = 9360\ Btu/hr$

Assume overall heat transfer to pipe by convection =

$$U = 12\ Btu/hr/ft^2/^oF$$

Area of pipe $= \frac{q}{U\Delta T_m} = \frac{9360}{12 \times 60} = 13\ ft^2$

Length of pipe $= 13\ ft^2 \times 2.9\ ft/ft^2 = 27.7\ ft$

One length of pipe 12 in. above bottom would provide adequate cooling for bottom D-shaped segment with both air and water cooling of tank. However, when liquid level is below 1 ft, the entire heat load would depend on air cooling, which is not satisfactory.

Case III: Bottom coils in contact with tank bottom for very low liquid levels; D-segment to be cooled by next row of coils at 18 in. above bottom. This arrangement provides a total of 28 passes instead of the 26 calculated originally.

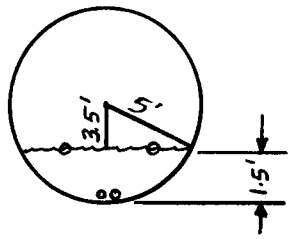

$\cos\theta = 3.5/5;\ \theta = 0.796$ radian

Area of liquid cross section $= (2)(25)\left(\frac{0.796}{2} - \frac{3.57 \times 3.5}{2 \times 5 \times 5}\right) = 7.4\ ft^2$

Liquid volume $= 7.4\ ft^2 \times 30\ ft \times 7.48\ gal/ft^3 = 1660\ gal$

Heat liberated = 1660 gal x 12 Btu/hr/gal = 19,900 Btu/hr

Two pipes, each 28 ft long, would give a total pipe length of 56 ft; overall heat transfer coefficient to get rid of this heat would have to be

$$U = \frac{q}{A\Delta T} = \frac{19{,}900\ Btu/hr \times 2.9\ ft/ft^2}{56\ ft \times 60^oF} = 17.2\ Btu/hr/ft^2/^oF$$

This value of U falls within the range of U = 15 to 20 for free convection, so this geometry is satisfactory with water cooling of tank at all times.

10.6.5 Preliminary Specifications for the Waste Evaporator, Idaho Chemical Processing Plant

The specifications given here were supplied to Foster Wheeler Corporation by Oak Ridge National Laboratory in November, 1950. The purpose of the waste evaporator is to concentrate the process equipment waste from the chemical separations process by evaporating water from the waste. The condensate water must be monitored for radioactivity and either discharged to the service waste system or re-evaporated until the radioactivity is low enough to permit discharge. The limit of radioactivity permitted in this water has not yet been established but will be low (of the order of 10 β c/m/ml). The concentrate from the evaporator shall be stored indefinitely in an underground stainless steel tank.

The waste evaporator will receive an estimated 20,000 gal of radiochemical waste per week from the two 5000-gal process equipment waste collection tanks, WG 101 and WH 100, in the Process Building plus an occasional undetermined quantity of cell floor drain waste from collection tanks WG 100 and WH 101 in the Process Building. Process equipment waste will be a dilute aqueous solution containing small quantities of aluminum nitrate, sodium nitrate, sodium phosphate, sodium citrate, and other salts. It is estimated that the maximum total solids content of this waste will be 2.0%. The viscosity, specific gravity, specific heat, and other characteristics

affecting evaporation shall be considered to be those of water. The fission products, which cause the radioactivity, will be present in too low chemical concentrations to affect evaporation chemically. The amount of radioactivity in the raw radiochemical waste is estimated to average 10^6 β c/m/ml.

The waste evaporator shall evaporate 300 gal of water per hour continuously from the waste fed to it, and shall be capable of operating at atmospheric pressure or at 100 mm Hg absolute pressure. A decontamination factor of 10^5 is expected, so that the radioactivity in the evaporated water should be of the order of 10 β c/m/ml. The waste shall be concentrated by a factor of 30 to 1 or to a specific gravity of 1.3, the 1.3 specific gravity to be the determining factor. No concentrate shall be discharged until the specific gravity reaches this value. The combined volume of the reboiler (WL 300) and flash column (WL 113) shall be great enough to accommodate the accumulated concentrate from a minimum of five days' continuous operation. The characteristics of the recirculating thermosyphon reboiler (WL 300) shall be such as to permit the continuous accumulation and recirculation of concentrate at the rate of 10 gal/hr for a minimum of five days.

Cold water (55°C) shall be admitted to the top bubble-cap tray of the separator column (WL 112) at a maximum rate of 30 gal/hr for the purpose of reflux. This reflux water must be evaporated, making the total vapor load 300 gal (2500 lb) per hour plus 30 gal (250 lb) per hour or a total of 330 gal (2750 lb) per hour.

The engineering flowsheet (Dwg. 542-41-P371) shows the schematic arrangement of the waste evaporator equipment as well as the size of each vessel and the nozzles required. The layout sketches show the proposed actual arrangement of the equipment in the evaporation and condensation cells of the Waste Disposal Building.

Waste Evaporator Surge Tank (WL 102). Various drawings, not reproduced here, show the tank and accessories. Drawing 542-12-V500 shows the details of the 18,400-gal underground stainless steel surge tank WL 102, which will receive all waste fed to the evaporator. Drawing D-6233 shows the details of a float type liquid-level indicator and a sampler* used for underground waste tanks at Oak Ridge. Sketch 542-SKOR V-116 shows an arrangement for boosting the sampler jet suction lift to permit the jet to lift over 25 ft. ORNL Drawing CL-706D-150 shows the details of the sampler jet used at Oak Ridge.

* Later eliminated or altered.

This jet will work on steam or air as the driving fluid. Schutte and Koerting Company Drawing G17467J shows the dimensions of their Fig. 233 steam jet syphons. They have recommended their size 3/4-in. jet to be submerged in tanks WL 102 for transferring 10 gal of waste per minute to feed tank WL 109 in the evaporator cell. Drawings or detailed specifications on the liquid-level recorder-alarm for WL 102 and of the diversion boxes on the lines from WG 101 and WH 100 to WL 101 and WL 102 will be prepared later at ORNL.

Waste Evaporator Feed Tank (WL 109). An equipment specification sheet (vessel sketch) and a photostat of a sketch of WL 109 have been prepared. This small tank (300 gal capacity) is to serve as a gravity feed tank for the evaporator. A liquid level recorder-controller* shall actuate the submerged jets in tanks WL 101 and WL 102 to fill WL 109 each time it nearly empties. An overflow line from WL 109 to WL 102 shall be provided, but the level controller shall shut off the feed jet each time WL 109 fills in order to minimize dilution of the waste by the steam supplied to the jet. A temperature recorder shall be provided for this feed tank.

Waste Evaporator Flash Tank (WL 113). An equipment specification sheet (vessel sketch) and a photostat of Blaw-Knox Drawing 2828-113-1 (not reproduced here) of the Knolls evaporator flash tank, on which WL 113 is modeled, have been prepared. The main purpose of the flash tank is to provide capacity for concentrate buildup in order to allow the evaporator to run for at least five days without a shutdown to drain out concentrate. This means that the feed inlet from WL 109 and the vapor inlet from the thermosyphon reboiler (WL 300) must be at least 5 ft above the lower tank line of WL 113 to provide 1200 gal buildup capacity.

A level recorder-controller shall be provided to regulate the feed rate from WL 109 to WL 113. This device shall maintain a minimum liquid level in WL 113 sufficient to keep the reboiler tubes completely submerged. Because most of the volume of WL 113 will be occupied by liquid while the evaporator is operating, most of the internal baffling of the Knolls flash tank can be eliminated. Some internal spray nozzles to aid in decontaminating the vessel and a raw steam sparger to preheat the liquid shall be provided. A density recorder-alarm shall be provided to warn of the buildup of concentrate. The temperature in both the vapor and liquid portions of WL 113 shall be recorded. A sampler shall also be provided.

The control system shown on the evaporator flowsheet (Drawing

* Later eliminated or altered.

542-21-P359) proposes the following:

1. Manual setting of a steam pressure indicator-controller to regulate steam flow to the reboiler (WL 300).

2. The liquid level in the flash tank (WL 113) to control feed rate and submergence of reboiler tubes.

3. The feed rate to be determined by an integrating flow rate indicator on WL 109 or by the buildup of condensate in the condensate receivers (WL 106 and WL 107).

An alternate control system would be the following:

1. The feed rate to WL 113 to control steam flow to the reboiler.

2. The liquid level in WL 113 to reset the steam rate to protect reboiler tube submergence.

This alternate system hinges on the availability of a satisfactory feed-flow-rate indicator-controller. Such a device would have to be constructed to avoid mechanical connection between the actuating device in the feed stream and the outside. Packing glands of mechanisms exposed to radioactive fluids are sources of serious difficulties and their use must be avoided. An electromagnetic type flowmeter, which uses the flowing liquid as the actuating medium, is in the development stage at ORNL and shows promise for adaptation to this waste evaporator. Foster Wheeler should investigate the availability of commercial flow indicator-controllers having the characteristics desired for this installation.

Waste Evaporator Reboiler (WL 300). An equipment specification sheet (vessel sketch) and a photostat of a sketch of WL 300 have been prepared. The reboiler has been sized according to ORNL calculations based on the required duty. Foster Wheeler should check this sizing and should calculate the recirculation rate for atmospheric and vacuum evaporation to determine if the proposed arrangement for the vertical thermosyphon is satisfactory. The difficulty of steam condensate removal when evaporating at 90 mm Hg absolute pressure and maintaining a mean temperature differential of 60°F should be investigated by Foster Wheeler. This difficulty might be overcome by controlling the flow of condensate instead of controlling the steam flow to the reboiler.

Waste Evaporator Separator Column (WL 112). An equipment specification sheet (vessel sketch), a photostat of Blaw-Knox Drawing 2828-112-1 of the Knolls evaporator separator column, from which WL 112 is modeled, and a photostat of an ORNL sketch of WL 112 have been prepared. On the ORNL sketch the number of manholes and nozzles on WL 112 has been reduced from that shown on the Knolls separator column. Internal manways shall be provided in the top two bubble cap trays of WL 112. Internal baffles* have been added to the lower section of WL 112 to aid the removal of entrained particles. Steam and air shall be supplied to a sparger in the bottom of WL 112 for use during decontamination of the vessel. Cold water passing through a rotameter and a control valve shall be introduced into the top bubble cap tray to serve as reflux. A pump or a steam jet syphon shall drain the column at the bottom, discharging the liquid into the flash tank (WL 113) above the liquid level in WL 113. The suction line and jet will have to be jacketed for water cooling* if a jet is used. A jet is preferable to a pump because of the maintenance consideration. Temperature and pressure measurements shall be taken at several points in the column as indicated on the flowsheet (Drawing 542-21-P359), and a differential pressure indicator* shall show the pressure drop across the column.

Waste Evaporator Condenser (WL 301). An equipment specification sheet (vessel sketch) and a photostat of an ORNL sketch of WL 301 have been prepared. This condenser has been sized according to ORNL calculations based on the required duty. Foster Wheeler should check this sizing and should calculate the baffling requirement on the shell side to determine if the proposed arrangement is satisfactory for both vacuum and atmospheric evaporation.

Waste Evaporator Receiving Tanks (WL 106 and WL 107). An equipment specification sheet (vessel sketch) and a photostat of Blaw-Knox Drawing 2828-A518-1 of the Knolls evaporator receiving tanks, from which WL 106 and WL 107 are modeled, have been prepared. In operation one tank at a time will collect condensate, the selection of the tank being made by means of valves accessible to operators. Each tank shall have a sampler, level recorder-alarm, temperature recorder, and pressure indicator. Each tank shall be capable of venting to the tank room atmosphere for relieving the vacuum before emptying, venting to the steam jet exhauster for vacuum operation, or venting to the off-gas system* for atmospheric operation. The condensate shall be drained from the tanks after a sample has been

* Later eliminated or altered.

analyzed to determine the radioactivity. A pump(WL 206) shall discharge the condensate either to a service waste drain or to WL 102 for re-evaporation, according to the radioactivity present.

Waste Evaporator Steam Jet Exhuaster. The steam jet exhauster for producing the vacuum for the waste evaporator is to be a type which produces no flashback under shut-off conditions. An Elliot or an Ingersoll-Rand is preferred. The capacity shall be determined and a means of regulating the vacuum in the evaporator shall be established by Foster Wheeler.

Waste Evaporator Ejector Exhaust Condenser (WL 302). An equipment specification sheet (vessel sketch) and a photostat of Patterson-Kelley Drawing C-1748-3 of the Knolls evaporator ejector exhaust condenser, which is identical with WL 302, have been prepared. On the Knolls evaporator this condenser condenses 462 lb of steam per hour and subcools the condensate by 128°F; this has been taken as the duty for WL 302.

Waste Evaporator Separator (WL 108). An equipment specification sheet (vessel sketch) and a photostat of Blaw-Knox Drawing 2828-A529-1 of the Knolls evaporator, which is similar to WL 108 separator, have been prepared. This vessel is to be provided with a sampler, a level indicator-controller, and a conductivity recorder alarm.* The separator will vent to the off-gas header. The purpose of the separator is to separate noncondensables from the condensate as well as to serve as a small monitoring tank to detect any radioactivity that might be entrained. The separator shall drain to the service waste system or to the condensate receivers (WL 106 and WL 107).

10.6.6 Waste Evaporator Calculations (Heat Transfer), November, 1950

a. Capacity

Design	= 300 gal/hr	= 2500 lb/hr	
Assume 10% reflux	= 30 gal/hr	= 250 lb/hr	
Total vapor load	= 330 gal/hr	= 2750 lb/hr	

Volume reduction to be 30 to 1

* Later eliminated or altered.

Evaporator to be capable of operating at atmospheric pressure or at 100 mm Hg absolute pressure (26 in. Hg vacuum)

b. Sensible Heat Requirement

Assume feed temperature = 55°F and cell temperature = 80°F.

(1) At atmospheric pressure:

(a) Sensible heat to preheat feed, $q = 2750(212 - 55)$
$= 432,000$ Btu/hr

(b) Sensible heat to balance radiation loss, $q = (h_r + h_c)A\Delta T$; (r = radiation and c = convection)
$h_r + h_c = 1.25$ (ORNL-393) $= 1.25 \times 1000 \times (212 - 80)$
$= 165,000$ Btu/hr

(c) Total sensible heat $= 597,000$ Btu/hr

(2) Under a vacuum of 100 mm Hg absolute pressure (26 in. Hg vacuum), actual pressure in pot or calandria = 270 mm Hg absolute, which corresponds to a boiling point of 165°F

(a) Sensible heat to preheat feed, $q = 2750(165 - 55)$
$= 303,000$ Btu/hr

(b) Sensible heat to balance radiation loss, $q = 1.25 \times 1000(165 - 80)$
$= 106,000$ Btu/hr

(c) Total sensible heat $= 409,000$ Btu/hr

c. Latent Heat Requirement

(1) At atmospheric pressure, $q = 2750 \times 970$
$= 2,665,000$ Btu/hr

(2) Under a vacuum (100 mm Hg absolute pressure), $q = 2750 \times 1022$
$= 2,815,000$ Btu/hr

d. Total Heat Requirement

(1) At atmospheric pressure, $q = 3,262,000$ Btu/hr

(2) Under a vacuum (100 mm Hg absolute pressure), $q = 3,224,000$ Btu/hr

e. Heating Area Requirement, **calandria** or vertical thermosyphon reboiler. To prevent salting of tubes, it is important to limit $\triangle T$ on boiling transfer to 60°F. From Blaw-Knox data,

$$h_f = 235$$

$$h_{fs} = 1000$$

$$U = 235{,}000/1235 = 190$$

(f = water film and fs = steam film)

(1) At atmospheric pressure, $A = q/U\triangle T = 3{,}262{,}000/(190 \times 60) = 287\ ft^2$

Assume 3/4-in.-o.d. tubes, 8 ft long;

$$\frac{287}{8 \times 0.1963\ ft^2/ft} = 183 \text{ tubes required}$$

From Blaw-Knox tube layout standards, a 16-in.-diameter exchanger has 216 tubes 3/4 in. o.d. on 15/16-in. triangular pitch as the nearest for this requirement.

Backchecking to see if U required for this exchanger meets the U = 190 assumed as the basis for the calculation:

$$A = 216 \times 8 \times 0.1963 = 340\ ft^2$$

$$U = q/A\triangle T = 3{,}262{,}000/(340 \times 60) = \underline{160}$$

This exchanger should be satisfactory if the surface required for sensible heat is adequate.

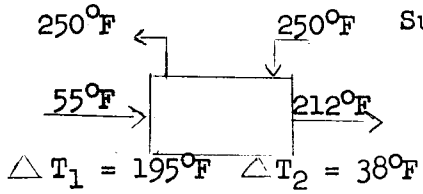

Surface for sensible heat: q = 597,000 Btu/hr

$$LMTD = \frac{\triangle T_1 - \triangle T_2}{\ln \frac{\triangle T_1}{\triangle T_2}} = 157/1.64 = 96.5°F$$

From Blaw-Knox data: h_f = 80 (for mass velocity 2500 lb/hr at a 10 to 1 recirculation rate)

$$h_{fs} = 1000$$

$$U = 80{,}000/1080 = \underline{74}$$

Surface for sensible heat = A = 597/(74 x 96.5)
= 83.8 ft^2

Surface available = exchanger area - area calculated for U of 190 = 340 ft^2 - 287 ft^2 = 53 ft^2

This exchanger therefore does not provide adequate surface for sensible heat transfer. If the sensible heat for feed preheating and balancing radiation loss can be supplied by raw steam sparging in the separator column, this exchanger will be satisfactory.

(2) Under a vacuum (100 mm Hg absolute pressure), vacuum in calandria should be about 270 mm Hg absolute pressure (from calculation by H. A. Ohlgren, unpublished). This corresponds to a boiling point of 165°F, a U of 190, a T of 60°F, and a q = 3,224,000 Btu/hr.

Required area = A = 3,224,000/(190 x 60) = 283 ft^2

The 16-in.-diameter shell containing two hundred and sixteen 3/4-in.-o.d. tubes offers 340 ft^2 and is therefore adequate for boiling under vacuum.

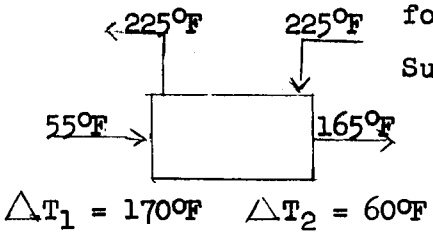

Surface for sensible heat: q = 409,000 Btu/hr

$$LMTD = \frac{110}{\ln \frac{170}{60}} = 110/1.045 = 105^\circ F$$

U = 74 (from Blaw-Knox data)

Surface area required = A = 409,000/(74 x 105) = 52.5 ft^2

Surface available = 340 - 283 = 57 ft^2

This exchanger is barely adequate for sensible heat transfer, but there is too small a margin for fouling. If the sensible heat load is removed by preheating the feed by a raw steam sparger in the separator pot, this exchanger would be satisfactory

(3) Final selection of reboiler

L. W. Zahnstecker of Foster Wheeler Corporation questioned the Blaw-Knox values of h_f = 235 and U = 190; if we assume a U of 100, then A = 3,262,000/(100 x 60) = 550 ft^2

Still assuming 3/4-in.-o.d. tubes 8 ft long,

$$\frac{550}{8 \times 0.1963 \text{ ft}^2/\text{ft}} = 350 \text{ tubes}$$

From Blaw-Knox tube layout standards, a 20-in-diameter exchanger has three hundred and forty-nine 3/4-in.-o.d. tubes on 15/16-in. △pitch, which is the exchanger chosen for WL 300

f. Vapor Velocity

(1) At atmospheric pressure, specific volume of water vapor at 212°F = 26.8 ft^3/lb

2750 lb/hr x 26.8 ft^3/lb = 73,700 ft^3/hr = 20.5 ft^3/sec

(2) Under a vacuum (approximately 270 mm Hg absolute pressure at **calandria** or pot), specific volume of water vapor at 165°F = 69.3 ft^3/lb

2750 x 69.3 = 190,000 ft^3/hr = 52.9 ft^3/sec

g. Velocity through the 349-tube 3/4-in.-o.d. Exchanger

(1) At atmospheric pressure

Internal area per tube = 0.302 ft^2/144 = 0.0021 ft^2

Internal area for exchanger = 349 x 0.0021 = 0.733 ft^2

Vapor velocity through exchanger = $\frac{20.5 \text{ ft}^3/\text{sec}}{0.733 \text{ ft}^2}$ = 28.0 ft/sec

Assume 30% vaporization per pass through exchanger:

28.0 x 0.3 = 8.36 ft/sec

0.3 x 20.5 = 6.15 ft^3/sec

Then liquid velocity would be 2750/0.3 = 9150 lb/hr

Assume specific gravity = 1.2:

$$9150/(62 \times 1.2) = 132\ ft^3/hr = 0.0366\ ft^3/sec$$

Liquid velocity through exchanger:

$$\frac{0.0366\ ft^3/sec}{0.733\ ft^2} = 0.05\ ft/sec$$

This is viscous flow and the heat transfer coefficient would be too low. Therefore, a higher recirculation rate would have to occur because less vaporization would occur. (Ohlgren says the vapor velocity of 8.36 ft/sec would sweep the liquid through at a faster rate by means of bubbles formed in the low part of the tubes.)

(2) Under a vacuum (approximately 270 mm Hg absolute pressure at **calandria**), vapor velocity through exchanger =

$$\frac{52.9\ ft^3/sec}{0.733\ ft^2} = 72.2\ ft/sec$$

Assume 40 to 1 recirculation rate through exchanger.*
Then liquid flow = 2750 lb/hr x (40 - 1) = 107,000 lb/hr
= 107,000/3600 x 60.9 x 1.2 x 0.733 = 0.555 ft/sec

Total flow = 72.8 ft/sec

h. <u>Calculation of Size of WL 301 Waste Evaporator Condenser</u>

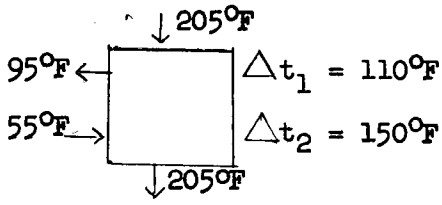

$$LMTD = \frac{150 - 110}{\ln \frac{150}{110}} = 40/0.304 = 136^\circ F \text{ for atmospheric evaporation}$$

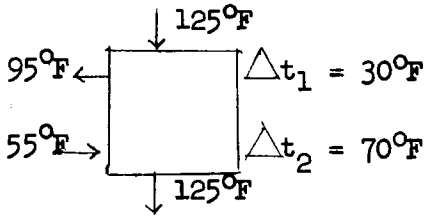

$$LMTD = \frac{70 - 30}{\ln \frac{70}{30}} = 40/0.845 = 47.4^\circ F \text{ for vacuum evaporation}$$

* See recirculation rate calculations, p. 226.

Duty: To condense 2500 lb/hr water vapor

= 2500 x 970 = <u>2,412,000 Btu/hr</u> for atmospheric evaporation

= 2500 x 1025 = <u>2,565,000 Btu/hr</u> for vacuum evaporation

Area: 614 tubes, 3/4 in. o.d. x 6 ft long, 16 BWG

614 x 6 x 0.1963 = <u>724 ft^2</u>

Required U = $q/A\Delta T$ = 2,565,000/(47.4 x 724) = 75.0 Btu/hr/ft^2/°F

Cooling water requirement: water temperature rise = 40°F(95°F - 55°F)

2,565,000/(1 x 40) = 64,125 lb/hr

= 128.5 gal/min

i. <u>Calculation of Size of WL 302 Ejector Exhaust Condenser</u>

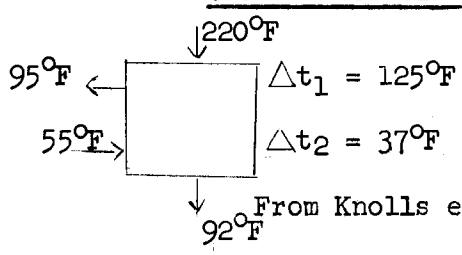

$$LMTD = \frac{125 - 37}{\ln \frac{125}{37}} = 88/1.22 = 72.4°F$$

From Knolls evaporator flowsheet:

Duty: To condense 462 lb/hr steam and to subcool to 128°F (estimated from 220°F to 92°F) = 462 x 971 (=449,000 Btu/hr) + 462 x 128 (=59,000 Btu/hr) = <u>508,000 Btu/hr</u>

Area: 55 tubes, 3/4 in. o.d. x 8 ft long, 16 BWG = 55 x 8 x 0.1963 = <u>86.4 ft^2</u>

Required U: U = $q/A\Delta T$ = 508,000/(72.4 x 86.4) = <u>81.4 Btu/hr/ft^2/°F</u>

Cooling water requirement: water temperature rise = 40°F(95°F - 55°F) 508,000/(1 x 40) = 12,700 lb/hr = <u>25.4 gal/min</u>

10.6.7 Waste Evaporator Calculations (Recirculation Rate)

The driving force for recirculation of the waste solution through the reboiler WL 300 and flash column WL 113 is the difference in head between the level in WL 113 and that in WL 300 after boiling has started (see sketch below, which is based on Fig. 27). In order that the volume of liquid in WL 113 may be at least 1200 gal, which is desirable to prevent frequent draining, the arrangement must be such that the liquid level in WL 113 can be approximately 5 ft. The bottom edge of the

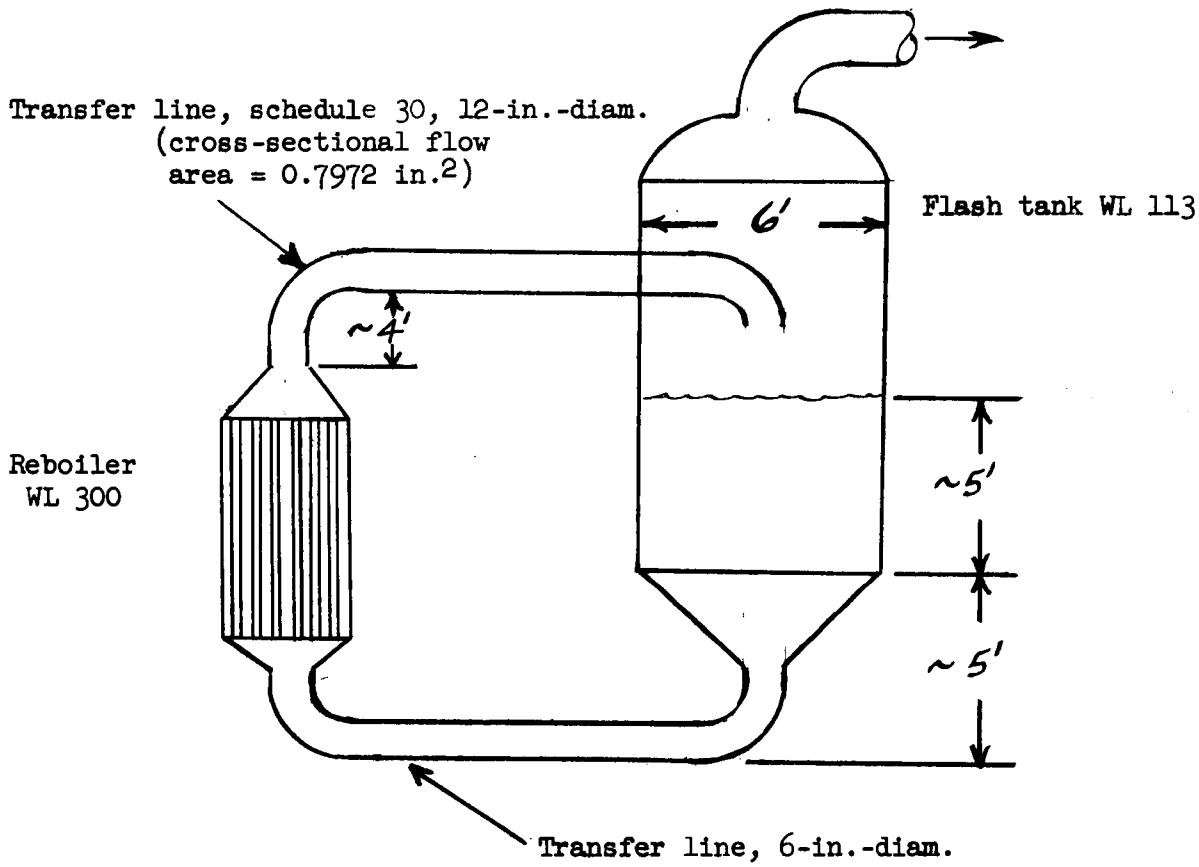

straight shell of WL 113 is approximately 5 ft above the bottom flange of the reboiler because of WL 113 cone dimension and of the liquid transfer line elbow radius.

The retarding force in the system is the head loss ($\triangle p$) through the system due to friction from expansion, contraction, and acceleration.

In order to calculate the recirculation rate needed, pressure drop values were assumed across each section, and these assumed values were checked against calculated values based on flow conditions at the pressures assumed. When trial and error calculations finally resulted in agreement between assumed and calculated $\triangle p$ values across each step, the recirculation rate for the available driving force was known. Many calculations were made before the assumed and calculated values were in agreement.

Calculations for vacuum evaporation, 2.61 psia in WL 113, with recirculation rates of 20 to 1 and 40 to 1 are given to show the required driving force, and hence the level difference required between WL 300 and WL 113 for these rates. A calculation for a 100-to-1 recirculation rate at atmospheric pressure (12.2 psia) is given also.

The formulas used in the calculations (Perry, Chemical Engineers' Handbook, 2d ed, pp. 798 ff.) are:

(1) When the fluid goes from the tube to the tank, the pressure loss in expansion (Perry, p. 821) is given by

$$\text{Change in head} = \frac{V^2}{2g}\left(1 - \frac{A_1}{A_2}\right)^2 \text{ ft}; \triangle p_{exp} = \rho \times \text{change of head lb/ft}^2$$

where V is the linear velocity of the fluid in the tube, in feet per second; g is the gravity constant in feet per second per second; ρ is the density in pounds per cubic foot; and A_1 and A_2 are the cross-sectional areas of the elbow and tank, respectively.

(2) For circular pipes, the Reynolds number is calculated (Perry, p. 799) from

$$Re = 4w/\pi D\mu = DG/\mu$$

where w is the weight rate of flow in pounds per second, D is the diameter of the pipe in feet, μ is the viscosity of the fluid in pounds per foot per second, and G is the mass velocity in pounds per second per square foot of cross section of pipe.

(3) For pressure drop due to friction, the Fanning equation (Perry, p. 805) is

$$\text{Change in head} = \frac{4fLV^2}{2g_cD} = \frac{2fG^2L}{g_cD\rho} \text{ ft}$$

where f is the Fanning friction factor (obtained from chart on p. 811 of the Perry handbook), L is the length of the tube in feet, and the other symbols are as given above.

(4) When the fluid goes from the tank to the pipe, the pressure loss in contraction (Perry, p. 822) is

$$\text{Change in head} = \frac{KV_2^2}{2g_c}\ \text{ft};\ \Delta p_{cont} = \rho \times \text{change in head lb/ft}^2$$

where V_2 is the linear velocity in the smaller pipe in feet per second and K is a factor depending on the ratio of A_2, the smaller cross section, to A_1, the larger. For $A_2/A_1 < 0.715$, $K = 0.4(1.25 - A_2/A_1)$; for $A_2/A_1 > 0.715$, $K = 0.75(1 - A_2/A_1)$.

(5) Pressure loss due to acceleration of fluid in flow (not from Perry) is:

$$\Delta p = \frac{G^2}{g}(V_{sp1} - V_{sp2})$$

where V_{sp1} and V_{sp2} are the average specific volumes of the vapor-liquid mixture at the two points of measurement.

a. General Calculations

Basis for design of WL 300:

Overall heat transfer coefficient = 100 Btu/hr/ft^2/^{o}F

ρV^2 in vapor line = 200 max.

Holdup in WL 113 = 1200 gal

(other data in "Preliminary Specifications of Waste Evaporator," p. 198)

Calculations for liquid height in WL 113:

Pressure in WL 113 = 2.61 psia = 135 mm Hg absolute pressure
1200 gal at 60°F = 1219 gal at 136°F (2.61 psia) = 163.0 ft^3

Volume of cone = $6^2 \times 3.1416 \times 3.136/(3 \times 4) = 29.6$ ft^3

Consider 1.5 ft^3 in 20 ft of 4-in.-diameter line; then height required in straight shell = $131.9 \times 4/(6^2 \times 3.14) = 4.66$ ft

Set outlet of reboiler vapor nozzle at least 1.5 ft above liquid level; elbow radius = 1.5 x pipe diameter. Base vapor line size on $\rho V^2 < 200$ for vapor only.

Feed:

Waste liquor	300 gal/hr	=	2500 lb/hr
Jet lift steam	15		125
Reflux	30		250
Total	345		2875

Design for extreme case, i.e., solids negligible:

Steam = 2875 lb/hr, evaporated at 135 mm Hg absolute pressure (2.61 psia)

Specific volume = 135.49 ft^3/lb

$\rho V^2 = 200$

$V^2 = 200 \times 135.49 = 27,100$

$V = 164.6$ ft/sec

$2875 \times 135.49/3600 = 108.1$ ft^3/sec

Cross-section area of vapor pipe = $108.1/164.6 = 0.6565$ ft^2

The standard pipe having a cross-sectional area nearest this value is a 12-in.-diameter, schedule 30 pipe, with actual diameter of 0.7972.

b. Vacuum Evaporation, Recirculation Rate of 20 to 1

Specific volume of vapor = 0.01627 ft^3/lb

Specific volume of liquid = 137.34 ft^3/lb

Enthalpy, H, of vapor = 1119.7 Btu/lb

Enthalpy, H, of liquid = 103.92 Btu/lb

Required capacity of reboiler:	Steam	2,875 lb/hr
	Water	54,625 lb/hr
	Total	57,500 lb/hr

(1) Pressure loss due to expansion as fluid passes from 12-in.-diameter elbow to tank WL 113 (6 ft in diameter): Assume $\triangle p = 0.241$ psi; then

Pressure inside elbow = 2.61 + 0.241 = 2.851 psia

Specific volume of vapor = 124.75 ft^3/lb

Specific volume of liquid = 0.01629 ft^3/lb

Enthalpy of vapor = 1121.2 Btu/lb

Enthalpy of liquid = 107.33 Btu/lb

Enthalpy in elbow = enthalpy in WL 113

$$1121.2(X) + 107.33(57{,}000 - X) = 1119.7(2875) + 103.92(54{,}625) = 8{,}895{,}000 \text{ Btu/hr}$$

from which X, the steam is calculated:

Steam (X) $\quad 2{,}678 \text{ lb/hr} \times 124.75 \text{ ft}^3/\text{lb} = 334{,}000 \text{ ft}^3/\text{hr}$

Water (57,500 - X) $\quad \dfrac{54{,}822 \text{ lb/hr}}{57{,}500 \text{ lb/hr}} \times 0.01629 \text{ ft}^3/\text{lb} = \dfrac{900 \text{ ft}^3/\text{hr}}{334{,}900 \text{ ft}^3/\text{hr}}$

Avg. specific volume = 334,900/57,500 = 5.822 ft^3/lb

Linear velocity through 12-in. pipe = 334,900/(3600 x 0.7972) = 116.7 ft/sec

$$\triangle p = \frac{(116.7)^2}{2 \times 32.17}\left[1 - \frac{(12.09)^2}{(6 \times 12)^2}\right]^2 = 206.5 \text{ ft}$$

$$= \frac{206.5 \text{ ft}}{5.8222 \text{ ft}^3/\text{lb} \times 133 \text{ in.}^2/\text{ft}} = 0.246 \text{ psi}$$

This is in agreement with assumed value.

(2) Pressure loss in 12-in.-diameter transfer line: Assume $\Delta p = 0.187$ psi; then

Inlet pressure = 2.61 + 0.246 + 0.187 = 3.043 psia

Specific volume of vapor = 117.48 ft^3/lb

Specific volume of liquid = 0.01630 ft^3/lb

Enthalpy of vapor = 1122.2 Btu/lb

Enthalpy of liquid = 109.86 Btu/lb

Enthalpy in transfer line = enthalpy in WL 113

$$1122.2(X) + 109.86(57{,}500 - X) = 119.7(2875) + 103.92(54{,}625)$$

X, the steam, is calculated:

Steam (X)	2,630 lb/hr	x 117.48 ft^3/hr	= 309,200 ft^3/hr
Water (57,500 - X)	54,870 lb/hr	x 0.01630 ft^3/hr	= 900 ft^3/hr
	57,500 lb/hr		310,100 ft^3/hr

Avg. specific volume = 310,100/57,500 = 5.390 ft^3/lb

Consider that a froth is flowing, viscosity = 0.01 centipoise (conversion factor = 0.000672)

$$Re = \frac{4 \times 57{,}500 \times 12}{3.14 \times 12.09 \times 0.01 \times 0.000672 \times 3600} = \frac{6.310 \times 57{,}500}{0.01 \times 12.09} = 3.002 \times 10^6$$

$$G = 57{,}500/3{,}600 \times 1/0.7972 = 20.04 \text{ lb/sec/ft}^2$$

Average specific volume = (5.390 + 5.822)/2 = 5.606 ft^3/lb

Take L = 50 ft (equivalent length of 12-in.-diameter transfer line, including two elbows)

$$\Delta p_{friction} = \frac{2 \times 0.003 \times (20.04)^2 \times 50 \times 12 \times 5.606}{32.17 \times 144 \times 12.09} = 0.145 \text{ psi}$$

$$\Delta p_{hydrostatic} = 4 \text{ ft}/(5.606 \times 144) = 0.005 \text{ psi}$$

$$\Delta p_{accel} = \frac{(20.04)^2(5.822 - 5.390)}{32.17 \times 144} = 0.037 \text{ psi}$$

$$\Delta p = 0.145 + 0.005 + 0.037 = 0.187 \text{ psi}$$

This is in agreement with the assumed value.

(3) Pressure loss due to contraction when fluid enters 12-in.-diameter transfer line from WL 300 channel (19-1/4 in. i.d.):

Velocity = 310,100/3600 x 0.7972 = 108 ft/sec in 12-in. line

$$A_2/A_1 = 0.7972/2.18 = 0.3653$$

$$K = 0.4(1.25 - A_2/A_1)$$

$$\Delta p = 0.4(1.25 - 0.3653)(108)^2/62.34 = 72.3 \text{ ft}$$

$$= 72.3/(5.39 \times 144) = 0.093 \text{ psi}$$

(4) Pressure loss due to expansion when fluid leaves tubes: Assume Δp = 0.108 psi; then

Pressure just inside tubes = 3.043 + 0.093 + 0.108
= 3.244 psia

Specific volume of liquid = 0.01631 ft^3/lb

Specific volume of vapor = 111.04 ft^3/lb

Enthalpy of liquid = 112.31 Btu/lb

Latent enthalpy = 1010.9 Btu/lb

Enthalpy of vapor = 1123.2 Btu/lb

Enthalpy of liquid in tubes + latent enthalpy = enthalpy of liquid + enthalpy of vapor in WL 113

$$112.31(2875) + 112.31(54,625) + 1010.9(X) = 1119.7(2875) + 103.92(54,625)$$

from which X, the steam, is calculated:

Steam (X)	2,410 lb/hr x 111.04 ft^3/lb	=	267,400 ft^3/hr
Water (57,500 - X)	55,090 lb/hr x 0.01632 ft^3/lb	=	900 ft^3/hr
	57,500 lb/hr		268,300 ft^3/hr

Avg. specific volume = 268,300/57,500 = 4.669 ft^3/lb

Velocity in tubes = 268,300/(3,600 x 0.735) = 101.5 ft/sec

$$\Delta p = \frac{(101.5)^2}{2 \times 32.17}\left(1 - \frac{0.735}{2.180}\right)^2 = 70.5 \text{ ft}$$

This is in agreement with assumed value.

(The value 0.735 ft^2 for the area of the tubes is really too high because the number of tubes was reduced from 349 to 336; 3/4 in. o.d., 16 BWG, A = 0.702 ft^2)

(5) Pressure drop through tubes: Assume $\Delta p_{friction} + \Delta p_{hydrostatic}$ = 0.449 in. vaporizing steam; then

$$G = 57{,}500/(3{,}600 \times 0.735) = 21.73 \text{ lb/sec/ft}^2$$

$$\Delta p_{accel} = (21.73)^2(4.669 - 0.016)/(31.17 \times 144) = 0.475 \text{ psi}$$

Pressure at point of incipient boiling = 3.244 + 0.475 + 0.449

= 4.168 psia

Specific volume of liquid = 0.01636 ft^3/lb

Enthalpy of liquid = 122.46 Btu/lb

If uniform heat flow through entire 8-ft length of tube is assumed,

Heat added per foot of tube length = (enthalpy in WL 113 - enthalpy at bottom of WL 300)/tube length

Enthalpy of liquid leaving WL 113:

Feed	2,875 lb/hr	at 55°F	x 23.06* Btu/lb	=	66,300 Btu/hr
Recirculation	54,625	at 136	x 103.92*	=	5,674,000
	57,500 lb/hr	132°F	99.88 Btu/lb		5,740,300 Btu/lb

* From enthalpy tables.

5,740,300/57,500 = 99.88 Btu/lb at 132°F

Heat added = (8,895,000 - 5,740,000)/8 = 394,000 Btu/hr/ft

Enthalpy of liquid at point of incipient boiling + heat added per foot x length of vaporization section = enthalpy in WL 113.

$$122.46(57{,}500) + 394{,}000L = 1119.7(2875) + 103.92(54{,}625)$$

Re = 3600; L = 4.71 ft for vaporization section

Avg. specific volume = (4.669 + 0.016)/2 = 2.344 ft^3/lb

$$\Delta p_{friction} = \frac{2 \times 0.01 \times (21.73)^2 \times 4.71 \times 12 \times 2.344}{32.17 \times 144 \times 0.620} = 0.435 \text{ psi}$$

$$\triangle p_{hydrostatic} = \frac{4.71 \text{ ft}}{2.344 \times 144} = 0.014 \text{ psi}$$

$$\triangle p_{total} = 0.435 + 0.014 = 0.449 \text{ psi}$$

This agrees with the assumed value.

Check on length of preheating section:

$$L = \frac{(H_{liq} - T_{liq}\,^{o}F \times \text{capacity}) \times 57{,}500}{394{,}000}$$

$$= \frac{(122.46 - 99.88)\ 57{,}500}{394{,}000} = 3.29 \text{ ft}$$

This agrees with the value obtained by subtracting 4.71 ft, the vaporization section, from 8.0 ft, the total length = 3.29 ft.

(6) Pressure drop through 4-in.-diameter bottom line:

$$Re = 6.310 \times 57{,}500/(0.5229 \times 4.026) = 1.72 \times 10^5$$

where the factor 6.310 is a combination of various terms (see paragraph 2, above), the viscosity is 0.5229 centipoise, the diameter is 4.026 in., f = 0.0049 from Perry's chart, and the equivalent length including two elbows = 38 ft.

$$\text{Velocity} = 57{,}500 \times 0.01626/(3600 \times 0.884) = 2.94 \text{ ft/sec}$$

$$\triangle p = 2 \times 0.0049 \times (2.94)^2 \times 38 \times 12/(32.17 \times 4.026) = 0.298 \text{ ft}$$

$$= 0.298/(0.01626 \times 144) = 0.128 \text{ psi}$$

(7) Pressure drop due to contraction as fluid enters tubes: negligible

(8) Pressure drop due to expansion as fluid enters reboiler WL 300:

$$\triangle p = \frac{(2.94)^2}{2 \times 32.17}\left(1 - \frac{0.0884}{2.18}\right)^2 = 0.1222 \text{ ft}$$

$$= 0.1222/(0.01626 \times 144) = 0.052 \text{ psi}$$

(9) Pressure loss in preheating section:

Average temperature = $(155 + 132)/2 = 144^{\circ}F$

$$\triangle p = 3.29 \text{ ft}/(0.01631 \times 144) = 1.40 \text{ psi}$$

(10) Total pressure drop through system:

$$\triangle p = 4.168 + 0.128 + 0.052 + 1.40 - 2.61 = 3.138 \text{ psi}$$

This must be balanced by an equivalent head of liquid in WL 113.

Height of liquid in WL 113 = $3.138 \times 144 \times 0.01626$

= 7.34 ft above reboiler bottom flange

= 2.34 ft in WL 113 straight shell

At end condition (liquid specific gravity = 1.3):

Hydrostatic head in preheating section = $3.29 \times 1.3/(0.01631 \times 144)$

= 1.820 psi

Total pressure drop through system = $4.168 + 0.128 + 0.052 + 1.820 - 2.61$

= 3.588 psi

Height of liquid in WL 113 = $3.588 \times 144 \times 0.01626/1.3$

= 6.4 ft above reboiler bottom flange

= 1.4 ft in straight shell of WL 113

This height does not provide enough volume for the desired accumulation of 1200 gal in WL 113.

c. Vacuum Evaporation, Recirculation Rate of 40 to 1

Required capacity of reboiler: Steam 2,875 lb/hr
112,125
115,000

(1) Pressure loss due to expansion when fluid passes from elbow to reboiler WL 113: Assume $\triangle p = 0.39$ psi; then

Pressure inside elbow = 2.61 + 0.39 = 3.00 psia

Specific volume of vapor = 118.86 ft^3/lb

Specific volume of liquid = 0.01630 ft^3/lb

Enthalpy of vapor = 1122.0 Btu/lb

Enthalpy of liquid = 109.33 Btu/lb

Enthalpy in elbow = enthalpy in WL 113

$$1122.0(X) + 109.33(115{,}000 - X) = 1119.7(2875) + 103.9(112{,}125) = 14{,}870{,}000 \text{ Btu/hr}$$

from which X, the steam is calculated:

Steam (X)	2,270 lb/hr x 118.86 ft^3/lb	=	269,100 ft^3/hr
Water (115,000 - X)	$\frac{112{,}730}{115{,}000 \text{ lb/hr}}$ x 0.01630	=	$\frac{1{,}800}{270{,}900 \text{ ft}^3/\text{hr}}$

$$270{,}900/115{,}000 = 2.359 \text{ ft}^3/\text{lb}$$

Velocity through 12-in.-diameter pipe = 270,900/(3600 x 0.7972)

= 94.4 ft/sec

$$\text{Change in head} = \frac{(94.4)^2}{2 \times 32.17}\left[1 - \frac{(12.09)^2}{(6 \times 12)^2}\right]^2 = 135.0 \text{ ft}$$

$$\triangle p = 135.0/(2.359 \times 144) = 0.400 \text{ psi}$$

This is in agreement with assumed value.

(2) Pressure loss in 12-in.-diameter transfer line: Assume $\Delta p = 0.545$ psi; then

Inlet pressure = 2.61 + 0.400 + 0.545 = 3.555 psia

Specific volume of vapor = 101.59 ft^3/lb

Specific volume of liquid = 0.01633 ft^3/lb

Enthalpy of vapor = 1124.7 Btu/lb

Enthalpy of liquid = 115.99 Btu/lb

Enthalpy in transfer line = enthalpy in WL 113

$$1124.7(X) + 115.99(115{,}000 - X) = 1119.7(2875) + 103.92(112{,}125)$$

from which X, the steam, is calculated:

Steam (X)	1,518 lb/hr x 101.59 ft^3/lb	=	154,100 ft^3/hr
Water (115,000)	$\frac{113{,}482}{115{,}000 \text{ lb/hr}}$ x 0.01631	=	$\frac{1{,}800}{155{,}900 \text{ ft}^3/\text{hr}}$

$$155{,}900/115{,}000 = 1.356 \text{ ft}^3/\text{lb}$$

$$G = 115{,}000/(3{,}600 \times 0.7972) = 40.08 \text{ lb/sec/ft}^2$$

$$Re = \frac{12.09 \times 40.08}{12 \times 0.01 \times 1/1488} = 6 \times 10^6$$

$$f = 0.00275 \text{ (from Perry's chart)}$$

Average specific volume = $(1.356 + 2.359)/2 = 1.858$ ft^3/lb

Take L = 50 ft (equivalent length of 12-in.-diameter transfer line, including two elbows):

$$\Delta p_{friction} = \frac{2 \times 0.00275 \times (40.08)^2 \times 50 \times 12 \times 1.858}{32.17 \times 12.09 \times 144} = 0.176 \text{ psi}$$

$$\Delta p_{hydrostatic} = 4 \text{ ft}/(1.356 \times 144) = 0.02 \text{ psi}$$

$$\Delta p_{accel} = (40.08)^2 (2.359 - 1.356)/(32 \times 144) = 0.349 \text{ psi}$$

$$\Delta p_{total} = 0.176 + 0.349 + 0.02 = 0.545 \text{ psi}$$

This is in agreement with assumed value.

(3) Pressure loss due to contraction as fluid enters 12-in.-diameter transfer line from WL 300 channel (19-1/4 in. i.d.):

Velocity in 12-in.-line = 155,900/(3,600 x 0.7972) = 54.3 ft/sec

$$A_2/A_1 = 0.7972/2.18 = 0.3653$$

$$K = 0.4(1.25 - A_2/A_1)$$

$$\triangle p = 0.4(1.25 - 0.3653)(54.3)^2/(2 \times 32.17) = 16.3 \text{ ft}$$

$$= 16.3/(1.356 \times 144) = 0.084 \text{ psi}$$

(4) Pressure loss due to expansion as fluid leaves tubes: Assume $\triangle p = 0.102$ psi; then

Pressure just inside tubes = 3.55 + 0.084 + 0.102 = 3.741 psia

Specific volume of vapor = 96.97 ft^3/lb

Specific volume of liquid = 0.01634 ft^3/lb

Enthalpy of vapor = 1125.6 Btu/lb

Enthalpy of liquid = 118.05 Btu/lb

Enthalpy just inside tubes = enthalpy in WL 113

$$1125.6(X) + 118.05(115{,}000 - X) = 1119.7(2875) + 103.92(112{,}125)$$

from which X, the steam, is calculated:

Steam (X) 1,286 lb/hr x 96.97 ft^3/lb = 124,700 ft^3/hr

Water (115,000 - X) $\frac{113{,}704}{115{,}000 \text{ lb/hr}} \times 0.01634 = \frac{1{,}900}{126{,}600 \text{ ft}^3/\text{hr}}$

126,600/115,000 = 1.101 ft^3/lb

Velocity in tubes = 126,600/(3,600 x 0.735) = 48.25 ft/sec

$$\text{Change in head} = \frac{(48.25)^2}{2 \times 32.17}\left(1 - \frac{0.735}{2.18}\right)^2 = 16.42 \text{ ft}$$

$$\triangle p = 16.42/(1.101 \times 144) = 0.102 \text{ psi}$$

This is in agreement with the assumed value.

(5) Pressure drop through tubes: Assume $\triangle p_{friction} + \triangle p_{hydrostatic} = 0.153$ psi through vapor section.

$$G = 115{,}000/(3{,}600 \times 0.735) = 43.46 \text{ lb/sec/ft}^2$$

$$\triangle p_{accel} = 1{,}888(1.101 - 0.016)/(32 \times 144) = 0.442 \text{ psi}$$

Pressure at point of incipient boiling = 3.741 + 0.442 + 0.153 = 4.336 psia

Specific volume of liquid = 0.01637 ft^3/lb

Enthalpy of liquid = 124.09 Btu/lb

If uniform heat flow through the tube length is assumed,

Heat added per foot of tube length = (enthalpy in WL 113 - enthalpy at bottom of WL 300)/tube length

Enthalpy of liquid leaving WL 113:

Feed	2,875 lb/hr at 55°F x 23.06* Btu/lb	= 66,300 Btu/hr	
Recirculation	112,125 at 136°F x 103.92	= 11,660,000	
	115,000 lb/hr	11,726,300 Btu/hr	

*From enthalpy tables.

$$11{,}726{,}300/115{,}000 = 101.90 \text{ Btu/lb at } 134^\circ\text{F}$$

Heat added = (14,870,000 - 11,726,300)/8 = 394,000 Btu/hr/ft

Enthalpy of liquid at point of incipient boiling + heat added per foot x length of vaporization section = enthalpy in WL 113

$$124.09(115{,}000) + 394{,}000L = 1119.7(2875) + 103.92(112{,}125)$$

L = 1.52 ft for vaporization section

Avg. specific volume = 1.101 + 0.01637 = 0.558 ft^3/lb

f = 0.01 (from Perry's chart)

$$Re = 0.05 \times 43.5/(0.5 \times 0.000672) = 6500$$

$$\triangle p_{friction} = \frac{2 \times 0.01 \times 1888 \times 1.52 \times 12 \times 0.588}{32.17 \times 0.620 \times 144} = 0.134 \text{ psi}$$

$$\triangle p_{hydrostatic} = 1.52/(0.558 \times 144) = 0.019 \text{ psi}$$

$$\triangle p_{friction} + \triangle p_{hydrostatic} = 0.134 + 0.019 = 0.153 \text{ psi}$$

This is in agreement with assumed value.

Check on length of preheating section:

$$L = 115{,}000(H_{liq} - T_{liq}\ {}^{o}F \times \text{capacity})/394{,}000$$

$$= 115{,}000(124.09 - 101.90)/394{,}000 = 6.48 \text{ ft.}$$

This agrees with the value obtained by subtracting 1.52, the vaporization section, from 8.0 ft, the total length = 6.48 ft.

(6) Pressure drop through 6-in.-diameter bottom line:

$$Re = 6.310 \times 115{,}000/(0.5229 \times 6.065) = 2.296 \times 10^5$$

f = 0.0046 (from Perry's chart), the equivalent length including two elbows = 38 ft, and the actual diameter of 6-in., schedule 30 pipe = 6.065 in.

Velocity in 6-in.-diameter line $= \frac{115{,}000 \times 0.01626}{3{,}600 \times 0.2006} = 2.59$ ft/sec

$$\triangle p = \frac{2 \times 0.0046(2.59)^2 \times 38 \times 12}{32.17 \times 6.065} = 0.1443 \text{ ft}$$

$$= 0.1443/(0.01626 \times 144) = 0.062 \text{ psi}$$

(7) Pressure drop due to expansion as fluid enters reboiler WL 300:

$$\triangle p = \frac{(2.59)^2}{2 \times 32.17}\left(1 - \frac{0.2006}{2.18}\right)^2 = 0.0864 \text{ ft}$$

$$0.0864/(0.01626 \times 144) = 0.037 \text{ psi}$$

(8) Pressure drop due to contraction as fluid enters tubes: negligible.

(9) Pressure loss in preheating section: average temperature = (156 + 134)/2 = 145°F

$$\triangle p_{hydrostatic} = \frac{6.48 \text{ ft}}{0.01632 \times 144} = 2.760 \text{ psi}$$

(10) Total pressure drop through system: $\triangle p$ = 4.336 + 0.062 + 0.037 + 2.760 - 2.61 = 4.585 psi. This must be balanced by an equivalent head of liquid in WL 113. Height of liquid in WL 113 = 4.585 x 0.01627 x 144 = 10.75 ft above reboiler bottom flange = 5.75 ft in straight shell of WL 113.

At end condition, when liquid has been concentrated to specific gravity of 1.3, the only pressure significantly affected will be the liquid heads in WL 300 and WL 113. Reboiler head = 2.760 x 1.3 = 3.588 psi. Total pressure drop through system = 4.336 + 0.062 + 0.037 + 3.588 - 2.61 = 5.413 psi. Height of liquid required in WL 113 = 5.413 x 0.01627 x 144/1.3 = 9.75 ft above WL 300 bottom flange = 4.75 ft in straight shell of WL 113. Since a level of 4.66 ft represents 1200 gal, this recirculation rate of 40 to 1 is slightly high for starting conditions and is approximately correct for the end conditions. The starting recirculation rate for 2.61 psia (vacuum) conditions will be about 30 to 1.

d. <u>Atmospheric Evaporation (12.2 psia), Recirculation Rate of 100 to 1</u>

Required capacity of reboiler WL 300:	Steam	2,875 lb/hr
	Water	284,625
	Total	287,500 lb/hr

Specific volume of vapor = 31.95 ft^3/lb

Specific volume of liquid = 0.01664 ft^3/lb

Enthalpy of vapor = 1146.7 Btu/lb

Enthalpy of liquid = 170.7 Btu/lb

(1) Pressure loss due to expansion when fluid passes from elbow to reboiler WL 113: Assume $\triangle p$ = 0.30 psia; then

Pressure inside elbow = 12.2 + 0.30 = 12.5 psia

Specific volume of vapor = 31.25 ft^3/lb

Specific volume of liquid = 0.1665 ft^3/lb

Enthalpy of vapor = 1147.2 Btu/lb

Enthalpy of liquid = 171.88 Btu/lb

Latent enthalpy = 975.3 Btu/lb

Enthalpy in elbow = enthalpy in WL 113

$$975.3(X) = (1146.7 - 171.88)(2875) - (171.88 - 170.7)(284{,}625)$$

from which X, the steam, can be calculated:

Steam (X)	2,530 lb/hr x 31.25 ft^3/lb	=	79,000 ft^3/hr
Water (287,500 - X)	$\frac{284{,}970}{287{,}500 \text{ lb/hr}}$ x 0.01665	=	$\frac{4{,}740}{83{,}740 \text{ ft}^3/\text{hr}}$

$$83{,}740/287{,}500 = 0.2929 \text{ ft}^3/\text{lb}$$

Velocity through 12-in.-diameter pipe = 83,740/(3,600 x 0.7972) = 29.18 ft/sec

$$\triangle p = \frac{(29.18)^2}{2 \times 32.17}\left[1 - \frac{(12.09)^2}{(6 \times 12)^2}\right]^2 = 12.91 \text{ ft}$$

$$= 12.91/(0.2929 \times 144) = 0.30 \text{ psi}$$

This is in agreement with assumed value.

(2) Pressure loss in 12-in.-diameter transfer line: Assume $\triangle p$ = 0.50 psi; then conditions just inside vapor line are:

Inlet pressure = 12.50 + 0.50 = 13.0 psia

Specific volume of vapor = 30.08 ft^3/lb

Specific volume of liquid = 0.01666 ft^3/lb

Enthalpy of vapor = 1147.9 Btu/lb

Enthalpy of vapor = 173.85 Btu/lb

Latent enthalpy = 974.1 Btu/lb

Enthalpy in transfer line = enthalpy in WL 113

$$974.1(X) = (1146.7 - 173.85)(2875) - (173.85 - 170.7)(284,625)$$

from which X, the steam, is calculated:

Steam (X)	1,974 lb/hr	x	30.08 ft^3/lb	=	59,380 ft^3/hr
Water (287,500 - X)	$\frac{285,526}{287,500 \text{ lb/hr}}$	x	0.01666	=	$\frac{4,759}{64,139 \text{ ft}^3\text{/hr}}$

$$64,139/287,500 = 0.2230 \text{ ft}^3\text{/lb}$$

Average conditions:

Steam	(79,000 + 59,380) x 0.5	=	69,190 ft^3/hr
Water	(4,759 + 4,740) x 0.5	=	4,759 ft^3/hr
			73,939 ft^3/hr

$$\text{Avg. specific volume} = \frac{73,939 \text{ ft}^3\text{/hr}}{287,500 \text{ lb/hr}} = 0.2570 \text{ ft}^3\text{/lb}$$

$$G = 287,500/(3,600 \times 0.7972) = 100.1 \text{ lb/sec/ft}^2$$

$$Re = (12.09 \times 100.1 \times 1.488)/(12 \times 0.05) = 3 \times 10^6$$

$$f = 0.00305 \text{ (from Perry's chart)}$$

$$\Delta p_{friction} = \frac{2 \times 0.00305 \times (100.1)^2 \times 50 \times 12 \times 0.2570}{32.17 \times 12.09 \times 144} = 0.17 \text{ psi}$$

Take L = 50 ft (equivalent length of 12-in.-diameter transfer line, including two elbows):

$$\Delta p_{hydrostatic} = 4 \text{ ft}/(0.2230 \times 144) = 0.12 \text{ psi}$$

$$\triangle p_{accel} = \frac{(100.1)^2(0.3212 - 0.2230)}{32.17 \times 144} = 0.21 \text{ psi}$$

$$\triangle p_{total} = 0.17 + 0.12 + 0.21 = 0.50 \text{ psi}$$

This is in agreement with assumed value.

(3) Pressure loss due to contraction as fluid enters 12-in.-diameter transfer line

Velocity in transfer line = 64,139/(3,600 x 0.7972) = 22.32 ft/sec

$$A_2/A_1 = 0.7972/2.18 = 0.3653$$

$$K = 0.4(1.25 - A_2/A_1)$$

$$\triangle p = \frac{0.4(1.25 - 0.3653)(22.32)^2}{2 \times 32.17} = 2.73 \text{ ft}$$

$$= 2.73/(0.2230 \times 144) = 0.09 \text{ psi}$$

(4) Pressure loss due to expansion as fluid passes from tubes: Assume $\triangle p$ = 0.11 psi, and L = 2.1 ft; then

Pressure just inside tubes = 13.00 + 0.09 + 0.11 = 13.20 psia

Specific volume of vapor = 29.66 ft^3/lb

Specific volume of liquid = 0.01667 ft^3/lb

Enthalpy of vapor = 1148.2 Btu/lb

Enthalpy of liquid = 174.63 Btu/lb

Latent enthalpy = 973.6 Btu/lb

Enthalpy of liquid in tubes + latent enthalpy = enthalpy of liquid in WL 113 + enthalpy of vapor in WL 113

$$973.6(X) = 2875(146.7 - 174.63) - 284,625(174.63 - 170.7)$$

from which X, the steam, is calculated:

Steam (X)	1,721 lb/hr	x	29.66 ft^3/lb	=	51,050 ft^3/hr
Water (287,500 - X)	285,779 / 287,500 lb/hr	x	0.01667	=	4,761 / 55,811 ft^3/hr

$$55{,}811/287{,}500 = 0.1941\ ft^3/lb$$

Velocity in tubes = 55,811/(3,600 x 0.735) = 21.1 ft/sec

$$\Delta p = \frac{(21.1)^2}{2 \times 32.17}\left(1 - \frac{0.735}{2.18}\right)^2 = 3.145\ ft$$

$$= 3.145/(0.1941 \times 144) = 0.11\ psi$$

(5) Pressure drop through tubes: Assume $\Delta p_{friction} + \Delta p_{hydrostatic} = 0.27$ psi for vaporization section; then

$$G = 287{,}500/(3{,}600 \times 0.735) = 108.7\ lb/sec/ft^2$$

$$\Delta p_{accel} = \frac{11{,}810(0.1931 - 0.0167)}{32.17 \times 144} = 0.45\ psi$$

Pressure at point of incipient boiling = 13.20 + 0.45 + 0.27 = 13.92 psia

Specific volume of liquid = 0.01669 ft^3/lb

Specific volume of vapor = 28.20 ft^3/lb

Enthalpy of liquid = 177.29 Btu/lb

Enthalpy of vapor = 1149.3 Btu/lb

Latent enthalpy = 972.0 Btu/lb

If uniform heat flow through entire 8-ft length of tube is assumed,

Heat added per foot of tube length =(enthalpy in WL 113 - enthalpy at bottom of WL 300)/tube length

Enthalpy of liquid leaving WL 113:

Feed	2,875 lb/hr at	$55^{o}F$ x 23.06* Btu/lb	=	66,300 Btu/hr
Recirculation	284,625	$203^{o}F$ x 170.70*	=	48,580,000
	287,500 lb/hr			48,646,000 Btu/hr

*From enthalpy tables.

$$48,646,000/287,500 = 169.21 \text{ Btu/lb at } 202^{o}F$$

Enthalpy of liquid at point of incipient boiling + heat added per foot x length of vaporization section = enthalpy in WL 113.

$$177.29(287,500) + 405,000L = 1146(2875) + (177.29 - 170.7)(284,625)$$

$$L = 2.1 \text{ ft for vaporization section}$$

$$Re = 0.05 \times 108.7 \times 1488/0.03 = 2.7 \times 10^{4}$$

$$f = 0.006 \text{ (from Perry's chart)}$$

$$\text{Avg. specific volume} = (55,811 + 287,500 \times 0.01669)/(2 \times 287,500)$$

$$= 0.1055 \text{ ft}^3/\text{lb}$$

$$\Delta p_{friction} = \frac{2 \times 0.006 \times 11,810 \times 2.1 \times 12 \times 0.1055}{32.17 \times 0.620 \times 144} = 0.13 \text{ psi}$$

$$\Delta p_{hydrostatic} = 2.1/(0.1055 \times 144) = 0.14 \text{ psi}$$

$$\Delta p_{friction} + \Delta p_{hydrostatic} = 0.13 + 0.14 = 0.27 \text{ psi}$$

This is in agreement with assumed value.

Check on length of preheating section:

$$L = \frac{287,500(177.29 - 169.21)}{405,000} = 5.74 \text{ ft}$$

This agrees with the value obtained by subtracting 2.1 ft, the vaporization assumed, from 8.0 ft, the total length = 5.9 ft

(6) Pressure drop through preheating section:

	Enthalpy of liquid (Btu/lb)	Specific volume of liquid (ft^3/lb)	T (^oF)	Viscosity (centipoises)
Interface	117.29	0.01669	210	0.20
Average	173.48	0.01667	206	
Bottom flange	169.21	0.01664	202	

$$Re = (0.620 \times 108.7 \times 1488)/(12 \times 0.20) = 4.18 \times 10^4$$

$$f = 0.0063 \text{ (from Perry's chart)}$$

$$\triangle p_{friction} = \frac{2 \times 0.0063 \times 11{,}810 \times 5.9 \times 12 \times 0.01667}{32.17 \times 0.620 \times 144} = 0.06 \text{ psi}$$

$$\triangle p_{hydrostatic} = 5.9 \text{ ft}/(0.01667 \times 144) = 2.46 \text{ psi}$$

(7) Pressure drop due to contraction as fluid passes from cone section to tubes:

$$\text{Velocity in tubes} = 108.7 \times 0.01667 = 1.813 \text{ ft/sec}$$

$$A_2/A_1 = 0.735/2.18 = 0.337$$

$$\text{Change in head} = \frac{0.4(1.25 - 0.337)(1.813)^2}{2 \times 32.17} = 0.01903 \text{ ft}$$

$$\triangle p = 0.01903/0.01667 \times 144 = 0.01 \text{ psi}$$

(8) Pressure drop due to expansion as fluid enters reboiler WL 300 from 6-in.-diameter bottom line

$$\text{Velocity in line} = (287{,}500 \times 0.01664)/(3{,}600 \times 0.2006) = 6.64 \text{ ft/sec}$$

$$\triangle p = \frac{(6.64)^2}{2 \times 32.17}\left(1 - \frac{0.2006}{2.18}\right)^2 = 0.583 \text{ ft}$$

$$= 0.583/(0.01664 \times 144) = 0.24 \text{ psi}$$

(9) Pressure drop through 6-in.-diameter line:

$$G = 6.64/0.01664 = 399 \text{ lb/sec/ft}^2$$

$$Re = (6.065 \times 399 \times 1488)/(12 \times 0.20) = 1.5 \times 10^6$$

f = 0.0034 (from Perry's chart, and the equivalent length, including two elbows = 38 ft)

$$\triangle p = \frac{2 \times 0.0034 \times (399)^2 \times 38 \times 12 \times 0.01664}{32.17 \times 144 \times 6.065} = 0.29 \text{ psi}$$

(10) Total pressure through system:

$$\triangle p = 13.92 + 0.06 + 2.46 + 0.01 + 0.24 + 0.29 - 12.20 = 4.79 \text{ psi}$$

This must be balanced by an equivalent head of liquid in WL 113.

Height of liquid required in WL 113 = 4.79 x 144 x 0.01664 = 11.48 ft above bottom flange of WL 300 = 6.5 ft in straight shell of WL 113 (liquid level required in flash tank for a volume of 1200 gal is about the same at atmospheric pressure as when vacuum evaporation is used).

This height is too great, so recirculation rate will be less than 100 to 1 but more than 75 to 1 (similar calculations, not recorded here, were made which indicated that a rate of 75 to 1 would be too low).

At end condition, with specific gravity = 1.3, hydrostatic head in preheating section = 5.9 ft x 1.3/(0.01667 x 144) = 3.20 psi

$\triangle p_{total}$ through system = 4.79 - 2.46 + 3.20 = 5.53 psi

Height required in WL 113 = 5.53 x 144 x 0.01664/1.3 = 10.2 ft above WL 300 bottom flange or = 5.2 ft in WL 113 straight shell.

This height is too high for desired 1200 gal accumulation volume, so recirculation rate will be between 75 to 1 and 100 to 1.

10.7 Operational Data from Evaporator Experimental Runs

10.7.1 Cold Runs

A series of waste evaporator runs was made after the liquid waste facilities of the Idaho Chemical Processing Plant were completed but before any radioactive material was available. The waste processed was from cold uranium runs in the main plant process, was saturated with hexone, and approximated the normal P.E.W. to be handled from hot operations in every respect except activity. The purpose of these runs was to test the operability of all the equipment and to gather heat transfer data. Table 39 gives the data gathered and lists the conditions of the runs, which are described below.

Temporary thermocouples were taped to pipes in the following places for these runs:

Steam inlet line to reboiler WL 300
Condensate outlet from reboiler WL 300
Vapor outlet from WL 300
Vapor inlet in bottom of bubble cap tower WL 112
Vapor inlet to condenser WL 302
Cooling water outlet from WL 302
Room temperature in the evaporation cell
Room temperature in the condensation and separation cell

Permanent temperature indicator points were available for the following:

Surge tank WL 102 temperature
Feed tank WL 109 temperature
Vapor temperature in flash tank WL 113
Liquid temperature in flash tank WL 113 bottom
Vapor temperature in top of bubble cap tower WL 112
Temperature of condensate leaving condenser WL 301
Temperature of cooling water leaving condenser WL 301

Some of the heat transfer data are questionable because at higher evaporation rates the higher temperature seemed to cause bigger discrepancies between the permanently installed thermocouples and those taped to the pipes. The heat transfer coefficients thus varied from run to run. The data are presented, however, as they are in range of the probable actual values.

Run 1: December 9, 1952

Ran at maximum vacuum (22.2 in. Hg in receiver = 1.0 psia). Steam flow at limit of flow indicator = 4000 lb/hr.

One feed jet was more than adequate to keep feed tank WL 109 full.

Feed tank temperature rose 11.6°C (from 23.0 to 34.6) in 5 hr operation owing to steam jet operation, but surge tank temperature did not rise.

No pressure could be built up in reboiler steam condensate catch tank WL 115 even with APIC-1-WL shut off. This indicated excess heat transfer area in the reboiler, as steam at 35 psig was fed to it.

The vacuum remained steady at this evaporation rate of 450 gal/hr.

All temperatures held steady after equilibrium was established in the first half hour.

Reboiler U was 293 Btu/hr/ft^2/°F, LMΔT was 27.7°F

Condenser WL 301 U was 395 Btu/hr/ft^2/°F, LMΔT was 14.5°F

Evaporator efficiency was 95% (pounds evaporated/pounds steam)

Run 2: December 10, 1952

Ran at maximum vacuum (22.5 in. Hg in receiver), on feed plus concentrate from Run 1. Steam flow at limit of indicator and by-pass valve cracked to give 5650 lb/hr.

One jet adequate to supply feed.

Feed tank temperature rose 7°C, to 37.2°C, in 4 hr. Surge tank temperature did not rise.

Vacuum remained steady at evaporation rate of 660 gal/hr.

Pressure in WL 115 was below atmospheric most of run but rose to 13 psia or slightly above atmospheric at end of run.

Leak in receiver bottom valve terminated run. Repaired by increasing valve spring tension.

Table 39

Summary of Experimental Runs

Liquid Waste Evaporator

			Flash Tank WL 113		Reboiler WL 300				WL 112		Condenser WL 301				Steam			Condenser WL 302			
1952 Date	Run No.	Evap. Rate (gal/hr)	Vapor Temp. (°F)	Liq. Temp. (°F)	Steam in Temp. (°F)	Condensate out Temp. (°F)	LMΔT	U*	Vapor Temp (°F)	Vacuum (psia)	Condensate Temp. (°F)	Water out Temp. (°F)	LMΔT	U*	Rate (lb/hr)	Eff. (%)	WL 115 Press. (psia)	Steam in Temp. (°F)	Condensate out Temp. (°F)	LMΔT	U*
12/9	1	450	120	120	220	123	27.7	293	117	1.0	60	97	14.5	395	3950	95	11.5				
12/10	2	660	124	124	256	140	55.0	213	118	1.1	66	93	20.0	424	5650	96.5	11.0	196	58	40	100
12/11	3	900	152	154	257	193	64.5	245	148	2.7	144	125	50.0	215	8000	93.6	12.5	198	60	41.3	96.5
12/12	4	1000	170	170	257	200	54.0	330	163	4.0	158	138	58.4	215	9650	91	15.0	196	60	48.6	82.5
12/16	5	850	228	234	275	237	16.0	900	225	12.2	122	207	38.1	283	8000	89.5	28.0				
12/17	6	750	230	234	266	234	18.0	665	225	12.2	165	214	44.3	205	6500	96	25.0				
12/19	7	380	247	247	250	225			237	12.2	50	132	32.8	144	4000	79	20.0				
12/23	8	1073	165	165	270	158			160	2.3	150	123	63.0	203	9150	97.5	12.0	197	59	59	
12/30	9	1140	142	142	270	176	70.8	291	139	2.4	135	113	49.0	276	9900	96	13.0	196	97	97	145

* BTU/hr/ft^2/°F.

Cooling water temperature for condensers is 50°F

Atmospheric pressure is 12.2 psia

Reboiler U was 213 Btu/hr/ft^2/^{o}F, LMΔT was 55°F.

Condenser WL 301 U was 424 Btu/hr/ft^2/^{o}F, LMΔT was 20.1^{o}F.

Condenser WL 302 U was 100 Btu/hr/ft^2/^{o}F, LMΔT was 40.0^{o}F.

Evaporator efficiency was 96.5%.

Run 3: December 11, 1952

Ran at maximum vacuum at high evaporation rate (900 gal/hr), on feed plus the concentrate from previous two runs in WL 113. Steam flow was 7600 lb/hr with cracked by-pass valve.

Vacuum fell from 20.5 in. Hg (= 2.5 psia) to 19.8 in. Hg (= 2.9 psia) during 2 hr of run, but seemed to hold steady during last half hour.

Feed tank temperature rose 10°C, to 37.6^{o}C, in 2 hr. No temperature rise in surge tank.

Two feed jets were able to supply sufficient feed.

Pressure in WL 115 was 12.5 psia or slightly above atmospheric during run.

Liquid temperature in WL 113 was about 0.5^{o}C higher than the vapor temperature.

Temperature of condensate from condenser WL 301 was 144°F, which is slightly above the boiling point of 2.9 psia, indicating that flashing to the vacuum jet was occurring.

Reboiler U was 245 Btu/hr/ft^2/^{o}F, LMΔT was 64.5^{o}F.

Condenser WL 301 U was 215 Btu/hr/ft^2/^{o}F, LMΔT was 50°F.

Condenser WL 302 U was 96.5 Btu/hr/ft^2/^{o}F, LMΔT was 41.3^{o}F.

Evaporator efficiency was 96.5%.

Run 4: December 12, 1952

Ran at maximum steam flow obtainable - all valves opened wide to give 9650 lb/hr and evaporation rate of 1000 gal/hr on feed plus concentrate from previous runs.

Two supply jets could not provide sufficient feed to keep level in feed tank.

Vacuum leveled off at 17.6 in. Hg = 4.0 psia.

Condensate temperature was just at the boiling point, indicating that flashing to the vacuum jet was occurring.

Steam pressure in WL 115 was 14 to 15 psia during entire run.

Feed tank temperature rose 10°C, to 41.0°C in 3 hr of run. Surge tank temperature rose 1.3°C, to 22.9°C.

Reboiler U was 330 Btu/hr/ft^2/°F, LMΔT was 54°F.

Condenser WL 301 U was 215 Btu/hr/ft^2/°F, LMΔT was 58.4°F.

Condenser WL 302 U was 82.5 Btu/hr/ft^2/°F, LMΔT was 48.6°F.

Evaporator efficiency was 91%.

Run 5: December 16, 1952

Ran at atmospheric pressure at evaporation rate of 860 gal/hr, on feed plus concentrate from previous runs. One feed jet supplied adequate feed for this rate. Liquid temperature in WL 113 ran 3°C higher than the vapor, probably due to rise in boiling point with caustic concentration.

Level control valve LRC-1-WL in the feed line would not pass enough feed at this rate (with no vacuum to suck it into WL 113), and level in flash tank fell about 5% per hour during run.

Vents on receivers WL 106 and 107 did not pass enough air for rapid startup, causing pressure buildup to 5 psig in receivers. This caused fumes to enter the operating corridor from sampler lines on these vessels.

No steam condensate collected in WL 115 at 28 psia (16 psig). Steam blew through pumps WL 208 and 208A despite closed PC-1 valve because bypass valve leaked. APIC-1 valve was also closed. This may have bearing on high heat transfer coefficient calculated for WL 300 from the data collected.

Reboiler U was 900 Btu/hr/ft^2/°F, LMΔT was 16.0 °F

Condenser WL 301 U was 283 Btu/hr/ft^2/°F, LMΔT was 38.1°F

Evaporator efficiency was 89.5%

Run 6: December 17, 1952

Ran at atmospheric pressure on feed plus concentrate from previous runs, using 6500 lb/hr steam to give evaporation rate of 750 gal/hr. After surge tank level fell below 10%, jets could not supply enough feed. Sediment in tank may have caused this, as feed was murky with solids.

WL 112 vapor temperature (225°F) indicated 20°F superheat at 12.2 psia. Condenser overheated because of partly closed water valve, necessitating shutdown. WL 113 liquid temperature was 2.5°C higher than vapor, probably due to caustic concentration.

No steam condensate was collected in WL 115 because of leaking valve. This may have had bearing on high heat transfer coefficient for WL 300.

Reboiler U was 665 Btu/hr/ft^2/°F, average ΔT was 18°F

Condenser WL 301 U was 205 Btu/hr/ft^2/°F, LMΔT was 44.3°F

Evaporator efficiency was 96%

Run 7: December 19, 1952

Ran at atmospheric pressure on feed plus concentrate from previous runs. Steam flow was set at 4000 lb/hr to give evaporation rate of 380 gal/hr. One jet supplied adequate feed. Superheating of vapor in WL 113 was noted; this held through WL 112 to condenser.

WL 112 jet was able to handle condensate caused by radiation losses, which averaged 20 gal/hr.

Temperature data on WL 300 were erratic and not suitable for calculating either the LMΔT or the U for the reboiler.

Condenser WL 301 was 144 Btu/hr/ft^2/°F, LMΔT was 32.8°F

Run 8: December 23, 1952

Ran at 2.3 psia (21.8 in. Hg) in receiver. Started with fresh feed, as concentrate from previous batches was drained from WL 113. Steam flow was 9150 lb/hr (maximum obtainable flow), giving an evaporation rate of 1073 gal/hr.

Level in WL 113 was maintained at 25% or 725 gal.

Temperature data on WL 300 were too erratic to be suitable for calculating the overall heat transfer coefficient or the LMΔT.

Condenser WL 301 U was 202 Btu/hr/ft^2/^{o}F; LMΔT was 63.0

Evaporator efficiency was 97.5%.

Run 9: December 30, 1952

Evaporator started cold and at atmospheric pressure reached full vacuum (20 in. Hg = 2.5 psia) in 30 min and full evaporation rate of 1140 gal/hr in 45 min. Steam pressure just downstream from control valve was 7.0 psig, and pressure in WL 115 was 2 psig.

Feed jets were able to supply adequate feed when 100 psig steam was applied to them, but this caused temperature in surge tank to rise from 22.7 to 27.9^{o}C.

Level in WL 113 maintained at 30 to 35%, which caused foam alarms to sound at the high evaporation rate, indicating sloshing in flash tank. A sudden rise in the WL 112 level indicated heavy entrainment or slugging over from flash tank. WL 112 level rose 15 gal/hr from radiation loss condensation.

Reboiler U was 291 Btu/hr/ft^2/^{o}F, LMΔT was 70.8^{o}F.

Condenser WL 301 U was 276 Btu/hr/ft^2/^{o}F, LMΔT was 49°F.

Condenser WL 302 U was 145 Btu/hr/ft^2/^{o}F, LMΔT was 27.5^{o}F.

Evaporator efficiency was 96.0%.

10.7.2 Operation of ICPP Waste Evaporator with Hot Feed (Letter to H. E. Goeller from J. O. Blomeke, March 30, 1953.)

The waste evaporator system in CPP 604 was observed in its initial operations with radioactive feed during three runs carried out in the second and fourth weeks of March, 1953. These runs provided the first opportunity to calculate decontamination factors for the operation and made it possible to judge the quality of the product condensate.

Prior to the startup of the first and second runs, quantities of unconcentrated first cycle aqueous raffinate were jetted to the process equipment drain and from there transferred to WL 102, the

evaporator surge tank. In WL 102 it was mixed with larger quantities of normal waste that had been previously accumulated; feeds were thus obtained with sufficient radioactivity to permit the computation of decontamination factors over the evaporation process. Following the second run, the evaporator bottoms and condensate were returned to WL 102, giving the same feed for the third as for the second run.

The operating conditions for each of the three runs are given in Table 40. In the first run, the evaporator was run at about 30% in excess of its design capacity and without water being circulated on the plates of the bubble plate de-entrainment column (WL 112). In the second run, the evaporator was operated at essentially the same rate as before but with 0.5 gal/min of reflux water to WL 112. The third run was carried out at approximately the design evaporation rate with, again, 0.5 gal/min reflux in WL 112. All runs were made under vacuum.

In addition to the samples taken of the feed (WL 102) and final evaporator bottoms (WL 113), samples were taken of the condensate receiver tanks WL 126 and WL 127 after each filling. All samples were analyzed for gross alpha, beta, and gamma activity. Determinations of specific gravity, pH, and electrical conductivity were made when possible. These results are given in Tables 40 and 41.

Average decontamination factors were calculated for each filling of a condensate tank. Since sampling of the evaporator while in use was not feasible, the activity buildup of the bottoms was calculated from the known rates and activity of the feed. The results of these calculations are summarized in Table 41.

As can be seen from Table 40, the beta decontamination factors were in the range of 10^3 to 10^4. It is interesting to note, however, that these factors tended to increase, generally, as the activity in the evaporator built up. To what extent this will continue to hold true is unknown, although it is felt that the higher activity level of the feed in the second and third runs was more responsible for the slightly higher decontamination factors obtained there than could be attributed to either the reflux water or the lower boiling rate.

As far as could be determined, no alpha or gamma activity was carried over into the condensate in any of the runs.

The pH and conductivity of the condensate indicate that this product falls short of being laboratory-quality distilled water. The HCO_3^- from CO_2 saturated water at normal temperature and pressure could not result in a pH of less than 5.3 to 5.5. The conductivity

of purest water is approximately 0.04 μmho/cm. The distilled water used in the CPP laboratory normally has a pH of 5.5 and conductivity of 4 to 5 μmhos/cm.

From these experiments, it may be concluded that from an operational standpoint, the evaporator is quite satisfactory. The product condensate from feeds with gross beta activity of 10^5 to 10^6 c/min/ml was not so good from the standpoint of decontamination and purity as had been hoped, but was not any worse than might have been predicted from a very careful analysis of the problem. The condensate is sufficiently decontaminated to be dumped to the service waste, and the evaporator can be expected to maintain such quality with feeds more radioactive than employed in these runs.

Table 40

Operating Conditions for Hot Evaporator Runs

	Run 1	Run 2	Run 3
Date of run	3/12-13/53	3/23-24/53	3/24-25/53
Steam consumption (lb/hr)	4000	4000	3000
Condensate rate (gal/hr)	468	502	395
Evaporator pressure (in. Hg)	2	3	3
Evaporator temperature (°C)	45	48	48
Water to plate, WL 112 (gal/min)	0	0.5	0.5
Total volume evaporated (gal)	14,400	7325	7600
Analysis of feed activity			
α (c/min/ml)	255	106	1500
β (c/min/ml)	3.17×10^5	1.7×10^6	1.8×10^6
γ (mv/ml)	0.88	3.97	4.9
pH	3.0	3.8	3.9
Analysis of evaporator bottoms activity			
α (c/min/ml)	4.8×10^4	9×10^4	3.5×10^4
β (c/min/ml)	8.4×10^6	1.9×10^7	1.7×10^7
γ (mv/ml)	18.3	51.0	45.5
pH	--	3.4	3.2
Specific gravity	1.141	1.071	1.064

Table 41

Analyses and Decontamination Factors of Product Condensates

Item or Analysis	Run 1				Run 2		Run 3	
	WL 107	WL 106	WL 107	WL 106	WL 106	WL 107	WL 106	WL 107
α (c/min/ml)	42	0	105	0	0	0	0	0
β (c/min/ml)	258	541	660	607	1340	815	581	999
γ (mv/ml)	0	0	0	0	0	0	0	0
Specific gravity	0.997	0.997	0.996	0.998	0.997	0.997	0.997	0.998
Conductivity, μmhos/cm	--	--	37.0	48.0	27.3	18.0	20	30
pH	--	4.7	4.7	5.2	7.2	7.2	7.2	6.4
Calculated β activity in bottoms when condensate tank half full (c/min/ml)	1.14×10^6	3.21×10^6	5.22×10^6	6.73×10^6	6.30×10^6	1.56×10^7	6.6×10^6	1.64×10^7
Avg. β decontamination factor	4.4×10^3	5.9×10^3	7.9×10^3	1.1×10^4	4.7×10^3	1.9×10^4	1.1×10^4	1.6×10^4

10.8 Costs

The cost of the liquid waste system of the Idaho Chemical Processing Plant is presented in the following tables. Table 42 lists by buildings and contractors the amounts charged against the liquid waste system. A column of total charges for the entire ICPP is included to show the relative cost of the liquid waste system (other process steps charged with costs are feed preparation, separations, final product, gaseous waste, and off-gas separations). The basis for each amount in Table 42 is as follows:

1. 101 Process Building

   Building charge based on cost per ft^3 and prorated over space occupied by liquid waste facilities. Equipment charge includes direct cost of piping and valves for cell drains, P.E.W. and C.F.D. headers, and diversion boxes.

2. 102 Laboratory and Administration Bldg.

   Building and equipment charges based on direct cost of waste piping and space occupied by pipe trench plus pro rata share of building and equipment costs based on analyses chargeable to liquid waste.

3. 103 Fuel Storage Area

   No charges against liquid waste.

4. 104-105 Waste Disposal Area

   Building charge based on space occupied by liquid waste facilities. Equipment charge is direct cost of liquid waste equipment.

5. 106 Site Development

   Charge prorated on basis of area occupied by liquid waste facilities.

6. 107 Service Building

   Charge prorated on basis of services consumed.

7. Design and Inspection

   Foster Wheeler and subcontractor charges based on number of drawings required for liquid waste. ORNL charges are direct costs of personnel employed on liquid waste plus overload.

Table 42

Liquid Waste Costs

	Liquid Waste	Total for ICPP
Bechtel Corporation		
101 Process Building		
Building	$ 281,516	$3,814,484
Equipment	353,518	5,659,522
Total	653,034	9,474,006
102 Laboratory and Administration Building		
Building	129,129	1,753,363
Equipment	63,369	1,062,613
Total	192,498	2,815,976
103 Fuel Storage Area		
Building	---	1,116,882
Equipment	---	246,566
Total	---	1,363,448
104-5 Waste Disposal Area		
Building	607,095	1,329,309
Equipment	2,439,118	3,670,192
Total	3,046,213	4,999,501
106 Site Development	204,999	999,021
Total		999,021
107 Service Building		
Building	60,786	425,074
Equipment	46,041	321,963
Total	106,827	747,037
Other Contractors and Suppliers		
101 Process Building	---	18,396
102 Laboratory and Administration Building	26,052	315,786
103 Fuel Storage Building	---	233
104-5 Waste Disposal	---	50,210*
106 Site Development	84,243	410,542
107 Service Building	38,141	266,718
Design and Inspection		
Foster, Wheeler and Subcontractors	600,930	2,928,507
ORNL Design	168,849	822,850
*Overall total	$5,103,786	$25,212,231

Table 43 is a breakdown of the direct equipment costs for the liquid waste system according to the descriptive breakdown followed in the report. Table 44 is a detailed breakdown of items in Table 43 to give specific costs of the major liquid waste system equipment pieces.

Table 43

Summary of Construction and Installation Costs of Liquid Waste System

	Material	Labor	Equipment Usage	Overhead	Total
Liquid waste collection and disposal system					
Waste collection, Building 101	$ 120,812	$ 61,052	$ 19,999	$ 79,203	$ 281,046
Waste collection, Building 104	318,599	86,603	9,512	170,347	585,061
Waste disposal, tank farm	339,978	359,793	85,948	307,112	1,092,831
Waste disposal well	11,338	0	13	4,563	15,914
Subtotal	790,727	507,428	115,472	561,223	1,974,852
Liquid waste evaporator	212,314	104,127	10,473	137,352	464,266
Total	$1,003,041	$ 611,555	$125,945	$ 698,577	$2,439,118

Table 44

Breakdown of Equipment Costs

	Material	Labor for Installing	Equipment Usage	Overhead	Total
Liquid waste collection and disposal system					
Waste collection, Building 101					
Vessels WG100-1, WH100-1 (4)	$ 33,344*	$ 1,527	$ 829	$ 14,191	$ 49,891
4 Pumps	5,342	1,779	156	2,960	10,237
4 mixers	2,940	983	86	1,631	5,640
3 jets	1,831	610	54	1,015	3,510
Piping, valves, and fittings:					
Service	1,645	1,172	275	1,217	4,309
Sleeves (stainless steel)	1,275	392	18	832	2,517
Process (stainless steel)	8,914	6,644	396	7,534	23,488
Process (stainless steel) (Building 101-104)	20,721	36,485	17,858	26,656	101,720
Shielding and sampling					
Galleries 12 and 13	24,764	2,781	108	11,217	38,870
Gadgets for galleries 12 and 13	11,158	70	0	4,521	15,749
Instruments and controls	8,878	8,589	219	7,429	25,115
Subtotal, Building 101	$ 120,812	$ 61,032	$ 19,999	$ 79,203	$ 281,046
Waste collection, Building 104					
Vessels WL101-2, WM100-2 (5)	162,896*	7,120	3,864	69,159	243,039
Vessel WM302	3,276*	69	37	1,354	4,736
Piping, valves, and fittings:					
Sleeves	8,922	2,745	126	5,223	17,016
Drains	590	1,547	95	938	3,170
Service	11,515	8,201	1,922	8,510	30,148
Process (stainless steel)	67,494	50,305	2,994	51,986	172,779
Shielding and sampling					
Galleries 1 and 2	34,006	3,824	149	15,404	53,383
Gadgets for galleries 1 and 2	16,736	56	0	6,759	23,551
Instruments and controls	13,164	12,736	325	11,014	37,239
Subtotal, Building 104	$ 318,599	$ 86,603	$ 9,512	$ 170,347	$ 585,061

Table 44 (continued)

Breakdown of Equipment Costs

	Material	Labor for Installing	Equipment Usage	Overhead	Total
Waste disposal, Tank Farm					
Excavation and backfill					
Excavation	$ 0	$ 45,598	$ 739	$ 20,423	$ 66,760
Backfill	0	13,821	30,506	9,659	53,986
Concrete					
Forms	37,258	116,818	7,166	67,916	229,158
Reinforcing steel	21,439	12,715	9,269	15,359	58,782
Embedded steel	7,854	18,358	349	11,388	37,949
Place	43,670	22,340	8,414	28,499	102,923
Heat	0	5,292	25,461	5,277	36,030
Finish	0	14,286	566	6,437	21,289
Piping, valves and fittings:					
Sleeves	2,549	785	36	1,379	4,749
Service	3,290	2,343	549	2,432	8,614
Process (stainless steel)	50,939	37,966	2,260	37,689	128,854
Instruments and controls	8,573	8,293	211	7,172	24,249
Electrical (yard lighting)	998	1,658	118	1,155	3,929
Vessels WM180 and 181	146,298*	58,960	0	85,161	290,419
Vessels WM300 and 301	17,110*	560	304	7,166	25,140
Subtotal, Tank farm	$ 339,978	$ 359,793	$ 85,948	$ 307,112	$1,092,831
Waste disposal well, subtotal	11,338	0	13	4,563	15,914
Liquid waste evaporation system					
Equipment					
Vessel WL106	10,782*	427	232	4,636	16,077
Vessel WL107	10,782*	427	232	4,636	16,077
Vessel WL108	2,645*	105	57	1,198	4,005
Vessel WL112	21,709*	860	469	9,253	32,291
Vessel WL100	1,457*	57	31	696	2,241

* Includes fabrication cost.

Table 44 (continued)

Breakdown of Equipment Costs

	Material	Labor for Installing	Equipment Usage	Overhead	Total
Vessel WL301	$ 10,640*	$ 421	$ 228	$ 4,576	$ 15,865
Vessel WL302	2,277*	90	49	1,043	3,459
Vessel WL109	2,449*	97	53	1,115	3,714
Vessel WL113	11,157*	442	240	4,794	16,633
Vessel WL300	8,088*	321	172	3,498	12,079
Pumps WL 208 & WL 208 A	640	212	19	357	1,228
Sampling equipment	2,835	362	14	1,304	4,515
Instruments and controls	20,410	19,745	503	17,076	57,734
Cold runs	160	9,114	93	4,140	13,507
Electrical	667	1,105	78	770	2,620
Piping, valves and fittings:					
Drains	608	1,592	97	965	3,262
Service	30,919	21,898	5,197	22,803	80,817
Sleeves (stainless steel)	19,119	5,882	270	10,546	35,817
Process (stainless steel)	54,970	40,970	2,439	43,946	142,325
Subtotal, Evaporation System	$ 212,314	$ 104,127	$ 10,473	$ 137,352	$ 464,266
Total	$1,003,041	$ 611,555	$125,945	$ 698,577	$2,439,118

* Includes fabrication cost.