[redacted]

CENTRAL RESEARCH LIBRARY
DOCUMENT COLLECTION

ORNL 1700
Radiation Effects on Reactor Materials

MARTIN MARIETTA ENERGY SYSTEMS LIBRARIES
3 4456 0349634 9

EFFECT OF RADIATION ON THE DIELECTRIC CONSTANT AND ATTENUATION OF TWO COAXIAL CABLES

R. A. Weeks
D. Binder

CENTRAL RESEARCH LIBRARY
DOCUMENT COLLECTION

LIBRARY LOAN COPY

DO NOT TRANSFER TO ANOTHER PERSON

If you wish someone else to see this document, send in name with document and the library will arrange a loan.

OAK RIDGE NATIONAL LABORATORY
OPERATED BY
CARBIDE AND CARBON CHEMICALS COMPANY
A DIVISION OF UNION CARBIDE AND CARBON CORPORATION
UCC
POST OFFICE BOX P
OAK RIDGE, TENNESSEE

[redacted]

[redacted]

ORNL 1700

4

Contract No W-7405-eng-26

SOLID STATE DIVISION

EFFECT OF RADIATION ON THE DIELECTRIC CONSTANT AND ATTENUATION OF TWO COAXIAL CABLES

R. A Weeks and D Binder

DECLASSIFIED Per Letter Instructions Of AEC 2-23-55

M S for M T Bray
3-3-55 SUPERVISOR LABORATORY RECORDS
ORNL

Date Issued
MAR 2 1954

[redacted]

Oak Ridge National Laboratory
operated by
Carbide and Carbon Chemicals Company
A Division of Union Carbide and Carbon Corporation
Post Office Box P
Oak Ridge, Tennessee

3 4456 0349634 9

ABSTRACT

Measurements have been made on radiation induced changes in the phase constant and attenuation of two coaxial cables while being irradiated The measurements were made in the region of four megacycles. At this frequency the change in dielectric constant was (1 4 ± 0 4) % for both dielectrics after roughly 2 x 10^{18} nvt The change in attenuation was (9 ± 2) % for polyethylene and within the range of error for teflon The phase constant and attenuation were found by measuring the input impedance of an open-ended length of cable in the neighborhood of its quarter-wave frequency. Assuming a uniform cable dielectric and no other variables the input impedance has a minimum at this frequency From the minimum the attenuation and phase constant are found.

EFFECT OF RADIATION ON THE DIELECTRIC CONSTANT AND ATTENUATION OF TWO COAXIAL CABLES

R A Weeks and D Binder
Oak Ridge National Laboratory, Oak Ridge, Tennessee

Introduction

Plastic dielectrics in the form of coaxial cables are often used in and around radiation sources Many of the physical properties of such plastics have been studied[1] as a function of irradiation in neutron and gamma ray sources. It is of some interest to extend these studies to the effect of radiation on certain electrical properties, dielectric constant and attenuation, of importance in high frequency applications.

Experimental Method

An accurate technique of measuring relative changes in the dielectric constant and attenuation in coaxial cables during irradiation has been devised With this technique and the theory developed below, it was possible to determine changes in the relative value of the attenuation and specific dielectric constant, e', with an error less than 2% and 0.4% respectively Two types of coaxial cable have been inserted in the ORNL graphite reactor and measurements of attenuation and e' have been made during irradiation One of the cables was type RG-11/U with a polyethylene dielectric The other cable was a high voltage cable with a teflon dielectric Its characteristic impedance, Z_o, was approximately 50 ohms The latter cable was irradiated for approximately 700 hours (Fig II) and the RG-11/U for approximately 900 hours in a flux of 9 2 x 10^{11} thermal neutrons (Fig III). The observed e' increased about 1% for both

---

(1) O Sisman, C D Bopp, "Physical Properties of Irradiated Plastics", ORNL-928 Refer to Bibliography for other reports.

cables The observed attenuation of the teflon cable showed little change during the period of irradiation The observed change in attenuation of the RC-11/U cable was approximately 9% The measurements were made in the region of four megacycles.

Theory of Measurement

The equations pertinent to the technique are developed below. The input impedance of a transmission line of length ℓ is[2][3]

$$(1) \quad Z_{in} = Z_o \frac{Z(\ell) \cosh \gamma\ell + Z_o \sinh \gamma\ell}{Z(\ell) \sinh \gamma\ell + Z_o \cosh \gamma\ell}$$

where

Z_{in} = input impedance

$Z(\ell)$ = impedance of load

Z_o = characteristic impedance

γ = propagation constant

For low loss lines

$\gamma = \alpha + i\beta$

α = attenuation per unit length

$\beta = \omega\sqrt{\mu\epsilon}$

ω = frequency in radians per second

μ = permability

$\mu = 1$ (for dielectrics of interest here)

ϵ = dielectric constant

---

(2) George C Southworth, "Principles and Applications of Waveguide Transmission", p 39-72, 1950, D Van Nostrand Co.

(3) G G Montgomery, et al, "Principles of Microwave Circuits", p 67, 1948 McGraw Hill.

For an open ended line, $Z(\ell) \gg Z_o$, equation (1) becomes

$$(2) \quad Z_{in} = Z_o \coth \gamma \ell$$

Then if

$$\beta \ell = \frac{\pi (2n-1)}{2}, \; n = 1, 2, 3, \ldots$$

equation (2) becomes

$$(3) \quad Z_{in} = Z_o \tanh \alpha \ell$$

At the quarter-wave frequency, n = 1

$$(4) \; \beta \ell = \frac{\pi}{2}$$

and

$$(5) \quad e' = \frac{e}{e_o} \left(\frac{c\pi}{2\omega_{\lambda/4}\ell}\right)^2$$

where c is the velocity of light, $\omega_{\lambda/4}$ is the angular quarter-wave frequency, ℓ is the length of the line, e_o is the dielectric constant of free space, and e' is the specific dielectric constant.

Equation (2) can be written

$$(6) \quad \frac{Z_{in}}{Z_o} = \frac{1 + e^{-2\alpha\ell} (\cos 2\beta\ell - i \sin 2\beta\ell)}{1 - e^{-2} \quad (\cos 2\beta\ell - i \sin 2\beta\ell)}$$

When

$$(7) \quad 2\beta\ell = \pi \pm \Delta\theta, \quad \Delta\theta \ll \pi$$

and retaining only first order terms equation (6) becomes

$$(8) \quad \frac{Z_{in}}{Z_o} = \alpha\ell \pm \frac{i\,\Delta\theta}{2}$$

The absolute magnitude is

$$(9) \quad \left|\frac{Z_{in}}{Z_o}\right| = \sqrt{(\alpha\ell)^2 + \left|\frac{\Delta\theta}{2}\right|^2}$$

and when $\Delta\theta = 0$

$$(10) \quad \frac{Z_{in}}{Z_o} = \alpha\ell$$

At the quarter wave frequency the magnitude of $\frac{Z_{in}}{Z_o}$ goes through a minimum. By plotting $\left|\frac{Z_{in}}{Z_o}\right|$ versus frequency, one can find both the attenuation and the quarter-wave frequency. A curve drawn from equation (9) is compared with observed values of $\left|\frac{Z_{in}}{Z_o}\right|$ in Figure IV. The agreement between observed and calculated values of $\frac{Z_{in}}{Z_o}$ is quite good. The value of $\alpha\ell$ used in the equation was that found from the minimum in the experimental data, $\alpha\ell = 0\ 0169$

Apparatus

A block diagram of the circuit used to measure $\left|\frac{Z_{in}}{Z_o}\right|$ is shown in Figure I-A. The procedure of the experiment was set up so that $\left|\frac{Z_{in}}{Z_o}\right|$ could be found from two voltages that were easily measured. In Fig. I-B the signal generator is treated as a Thevenin voltage source(4) With the terminals open the potential across them is

$$(11) \quad V = V_1$$

where V_1 = Thevenin voltage With the cable attached to the generator terminals the Thevenin voltage is increased until the potential across the terminals is the same as that in equation (11) Then

$$(12) \quad V = i\, Z_{in}$$

where i = current, and the new Thevenin voltage is

$$(13) \quad V_2 = i\,(Z_g + Z_{in})$$

where Z_g is the generator impedance. Substituting $i = \frac{V_1}{Z_{in}}$ in equation (13), we have for the input impedance

$$(14) \quad Z_{in} = \frac{V_1 Z_g}{V_2 - V_1}$$

At the quarter wave frequency (14) becomes

$$(15) \quad Z_o \tanh\alpha\ell = \frac{V_1 Z_g}{V_2 - V_1}$$

---

(4) George C Southworth, "Principles and Applications of Waveguide Transmission" p 26, 1950, D Van Nostrand Co.

If the generator impedance is matched to the characteristic impedance of the cable, $Z_o = Z_g$, $\tanh \alpha l \approx \alpha l$, then

$$(16) \quad \alpha l = \frac{V_1}{V_2 - V_1}$$

All that is necessary is to measure V_1 and V_2 in the region of $\omega_{\lambda/4}$ In the signal generator used in these measurements, a General Radio 605-B, a calibrated attenuator preceding the output terminal was used to measure the relative magnitudes of V_1 and V_2 The signal generator impedance was matched to the cable by a series resistor of appropriate value. The incidental shunting capacitance was negligible at the frequencies used. The value of the series impedance matching resistor was found by measuring the impedance of the generator and the characteristic impedance of the cable Since the cable impedance was larger than the generator impedance for both cables, the matching resistance was in series with the generator impedance. The cathode follower, receiver, and VTVM shown in Fig 1A were used to set the voltage V at a constant value. This was done by modulating the output of the signal generator, a small fraction of the r-f signal being passed by the cathode follower to the receiver, a National HRO-60, the modulation component then going to the VTVM. A cathode follower was used because of its high input impedance, approximately 100 megohms The deflection of the VTVM was kept constant for the conditions of cable connected and disconnected by varying the calibrated attenuator of the signal generator. The frequency was measured by the receiver tuning condenser of the HRO-60 which had been calibrated.

The advantages of this method of measuring relative changes in e' and attenuation are a) with one measurement the relative magnitudes of e' and attenuation can be determined with an accuracy not achievable by other methods, b) instruments and personnel can be shielded from the radiation source during

irradiation of cable, c) measurements can be made during irradiation, and d) standard instruments can be used. The major disadvantages are a) the cable is not uniformly irradiated, and b) there is a temperature gradient along the length of the cable. However, the conditions of irradiation are similar to those that would exist if the cables were used in and around a radiation source.

Cable Measurements

Using the above method changes in e' and αl in two coaxial cables have been measured during irradiation in the ORNL graphite reactor. The cables were inserted in Hole B of this reactor and the measurements made over a period of approximately 700 hours (approx. 1.6×10^{18} nvt) for one cable and 900 hours (approx 2.1×10^{18} nvt) for the other. The one irradiated for the 700 hour period had teflon as the dielectric, the other had polyethylene. The results for the two cables are shown in Figs II and III. It can be seen from these figures that the effect of radiation on the "measured e' " is small, the total observed change for both cables is approximately 1% of the initial value. The change in e' is proportional to twice the change in $\omega_{\lambda/4}$ i.e ,

$$(17) \quad \frac{\Delta e'}{e'} = \frac{2\,\Delta\omega_{\lambda/4}}{\omega_{\lambda/4}}$$

The "measured αl " for the teflon cable exhibited changes that were not outside the range of error for theperiod or irradiation. The polyethylene cable had a total change in the "measured αl " of approximately 9%

In order to determine whether there were transient effects resulting from variations in the flux around the cable measurements were made during the weekly shutdowns of the reactor. These were then compared to measurements made just prior to shutdown and just after start-up. In the teflon cable no significant change in e' and αl could be detected between the reactor-on and reactor-off

conditions. In the RG-11/U cable there were observable differences in the value of e' but none in $\alpha\ell$ between the two conditions. These differences were much smaller than the total change in e' for the period of irradiation. The change in e' for the two conditions seems to be correlated with the change in the temperature of the irradiated section of the cable. This temperature effect can be seen by comparing adjacent points on the $f_{\lambda/4}$ graph, Fig III, for which there was a change in the average temperature of the irradiated section of the cable The changes in e' are of the same sign as the changes in average temperature.

The average temperature is the average of the temperature of the pile inlet air and outlet air The air coolant flowed through the channel in which the cables lay, the inlet air being at one end of the cable and the outlet air at the other. Hence the average of the inlet and outlet air temperatures is an approximate measure of the average temperature of the cable At full pile power the difference between inlet and outlet air temperature was approximately 70°C

The reason for speaking of "measured e' " and "measured $\alpha\ell$ " arises from the conditions of the experiment The entire length of the cables was not irradiated Approximately 60% of the cable length was in the active lattice of the reactor, the remaining 40% passed through the reflector and shield of the reactor and to the instruments. In addition the flux distribution across the active lattice is not uniform. It has a maximum flux of 9.2×10^{11} thermal neutrons at the center, falling off to zero at the reflector As a result of these conditions the cables should be considered as having, to a first approximation, two dielectrics after the irradiation began Hence the "measured e' " and "measured $\alpha\ell$ " are not those of the irradiated section but of the combination of the unirradiated and the irradiated section The "measured $\alpha\ell$ " is simply the arthmetic sum of the $\alpha\ell$'s of the two sections The "measured e' " is a

somewhat involved combination of the e's of the two sections. In view of the small change in the "measured e' " it seems reasonable to assume that the observed change is approximately that of the irradiated section Since 60% of the cable was irradiated the "measured $\alpha\ell$ " is approximately 60% of the $\alpha\ell$ of the irradiated section. Hence the change of 9% in the "measured $\alpha\ell$ " of the polyethylene cable would be approximately 15% change in $\alpha\ell$ for the irradiated section These changes in e' and $\alpha\ell$ observed in the region of four megacycles should not be extended to other frequencies. Some preliminary measurements on teflon and polyethylene in the microwave region before and after irradiation indicate that changes in e' may be of the same order of magnitude as at four megacycles. The increases in attenuation are much greater for shorter periods of irradiation at microwave frequencies than those observed at the lower frequency.

Teflon[6] exhibits quite radical changes in its mechanical properties for an integrated flux of 10^{16} nvt whereas the effects of radiation damage begin to show up in polyethylene[7] between 10^{17} and 10^{18}nvt. In the above measurements of e' and $\alpha\ell$ the cables were inserted in a horizontal hole in the pile and were not moved until the end of the tests. Thus they were subjected to no mechanical strains. In view of the small changes observed in e' and $\alpha\ell$ (in the region of four megacycles) in these two materials as a result of irradiation the criteria of their usefulness in a radiation field would be the effect of this radiation on their mechanical properties.

Acknowledgments

The method used in these experiments was suggested by Mr. B. R. Gossick. We gratefully acknowledge his suggestion. Discussions with R L. Sproull were very helpful. We wish to thank him for his interest.

---

(6) O Sisman and C. D. Bopp, "Physical Properties of Irradiated Plastics", ORNL-928, p. 88-92.

(7) op cit., p. 78-82

UNCLASSIFIED
SSD A 879
DWG 22118

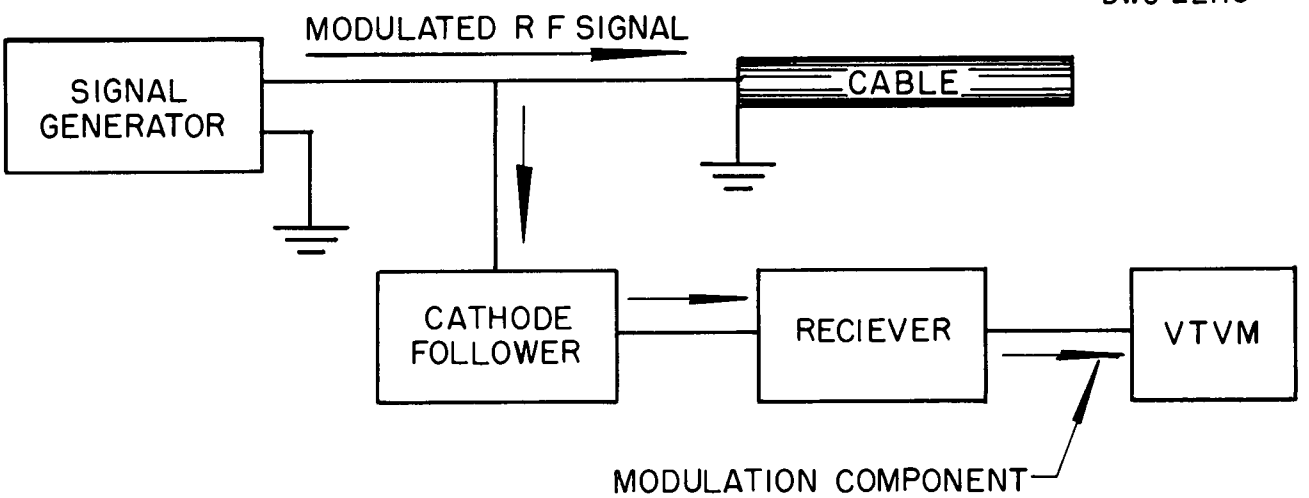

(a)

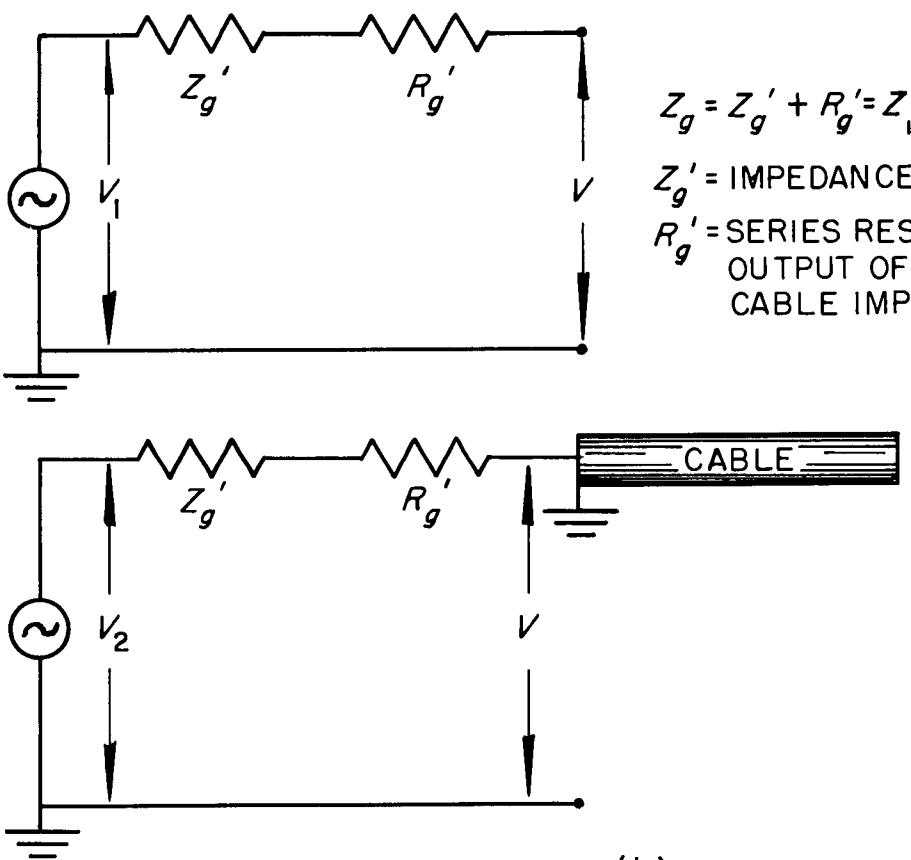

$Z_g = Z_g' + R_g' = Z_{in}$

Z_g' = IMPEDANCE OF SIGNAL GENERATOR

R_g' = SERIES RESISTANCE ADDED TO OUTPUT OF GENERATOR TO MATCH CABLE IMPEDANCE, Z_{in}

(b)

FIG 1

CIRCUIT DIAGRAMS FOR MEASURING $f_{\lambda/4}$ AND αl

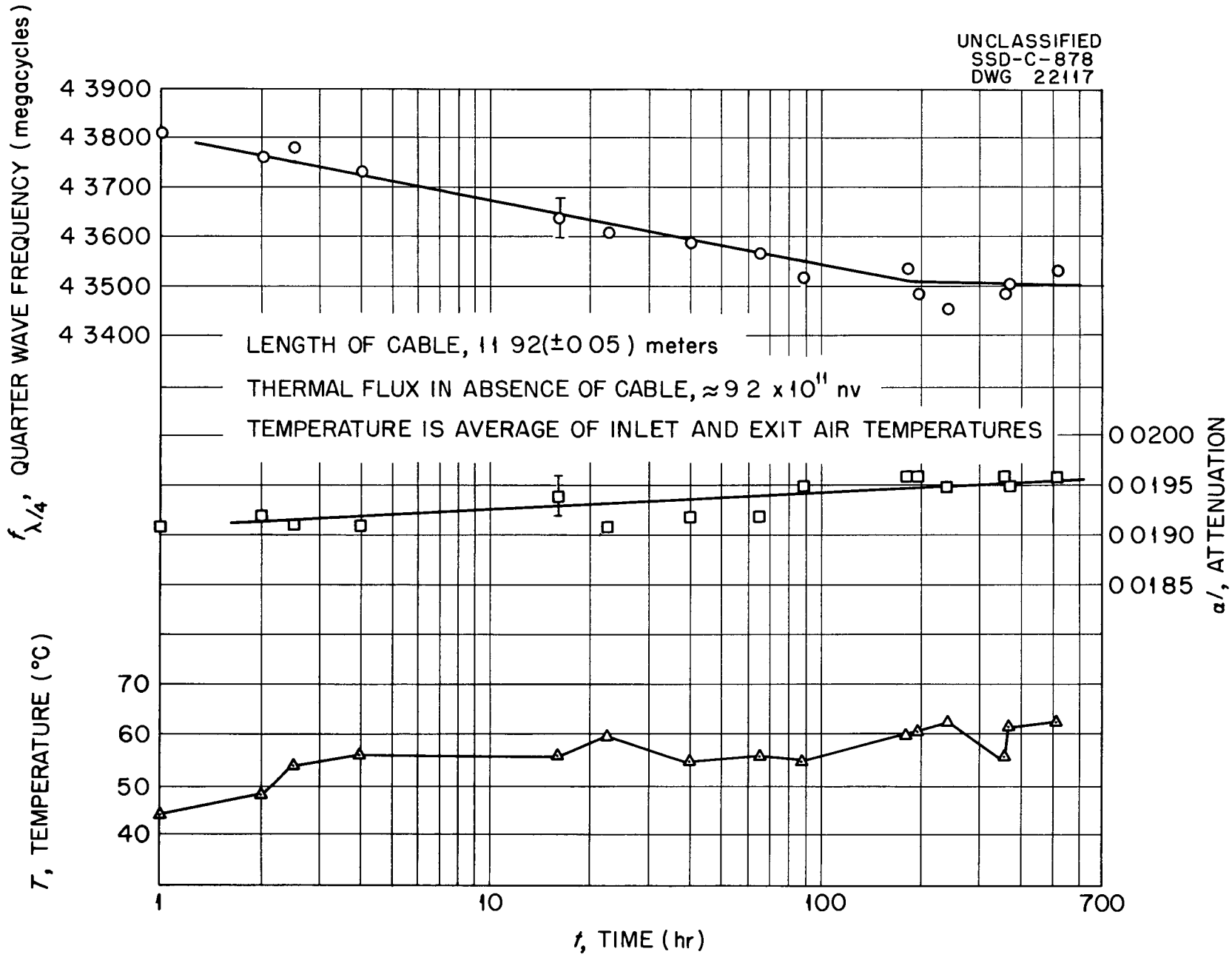

FIG 11

$f_{\lambda/4}$, AND α/ OF A TEFLON CABLE IRRADIATED IN HOLE B OF THE ORNL GRAPHITE REACTOR

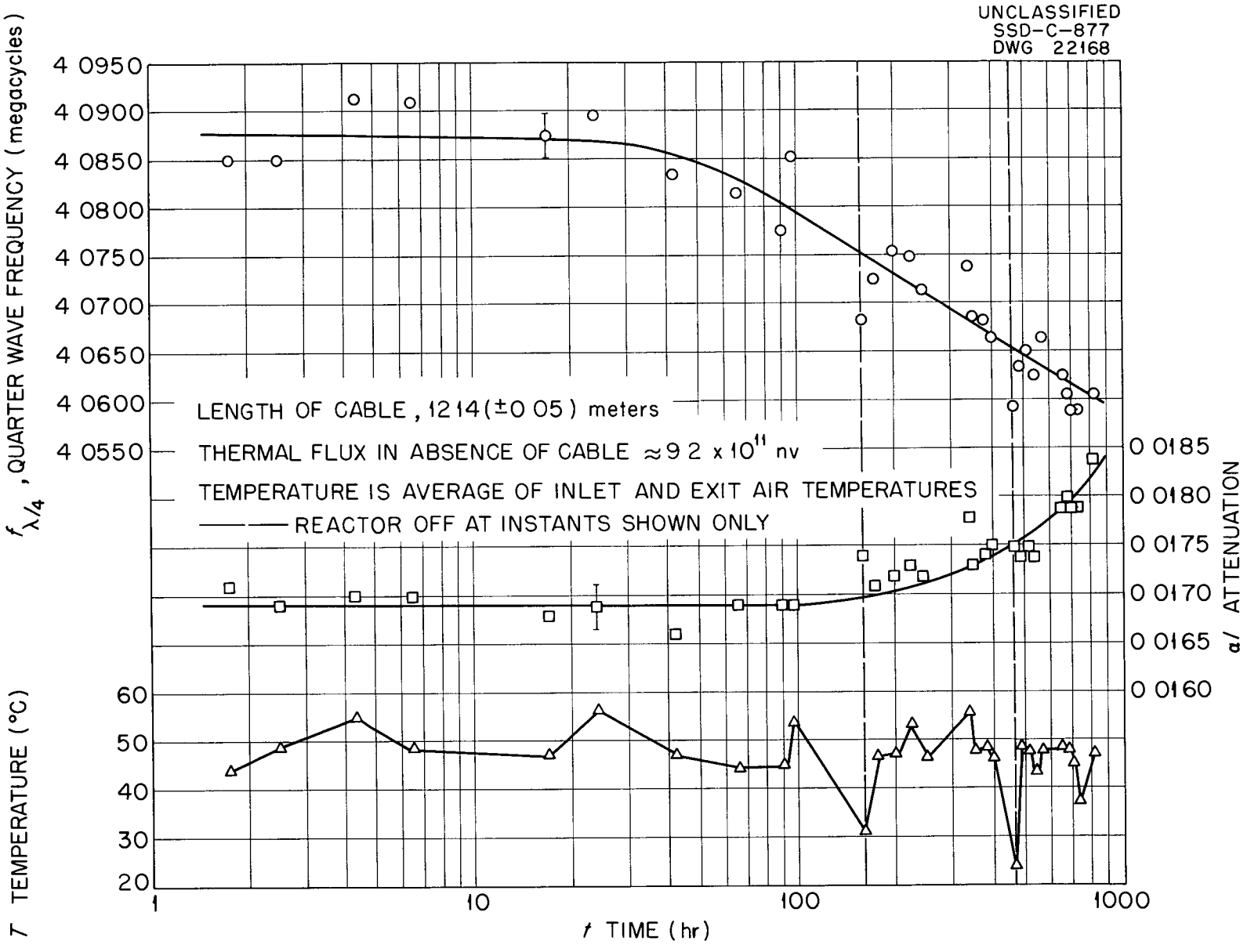

FIG III

$f_{\lambda/4}$ AND α/ OF POLYETHYLENE CABLE RG-11/U IRRADIATED IN HOLE B OF THE ORNL GRAPHITE REACTOR

UNCLASSIFIED
SSD-A-892
DWG 22274

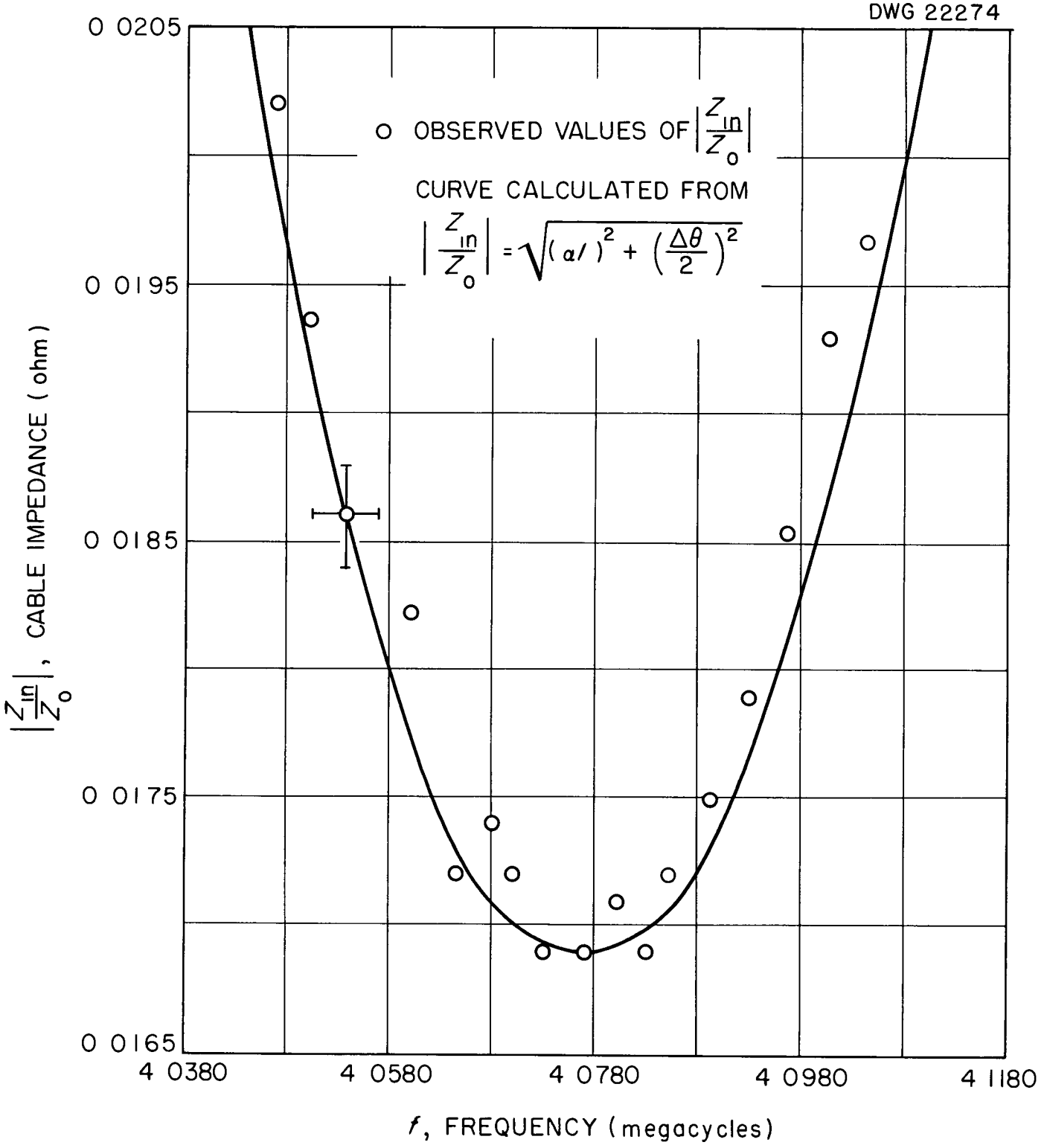

FIG IV

CABLE INPUT IMPEDANCE vs FREQUENCY ABOUT $f_{\lambda/4}$

[redacted]

BIBLIOGRAPHY*

(1) O. Sisman, C D Bopp, Physical Properties of Irradiated Plastics, ORNL-928

(2) J G Burr, W. M Garrison, The Effect of Radiation on Physical Properties of Plastic (1943) AECD-2078, (decl 1948)

(3) A O. Allen, D. M Richardson, Effect of Clinton Reactor Radiation on Plastics, CNL-16 (1948)

(4) M Burton, Effects of High-Energy Radiation on Organic Compounds", J. of Phys Col Chem , 51, 786 (1947)

(5) J W Ryan, Effects of Radiation on Organic Materials - II, CEL-57 (1952)
J W Ryan, Effect of Gamma Radiation on Certain Rubbers and Plastics, Nucleonics, 71, No. 8, 13-15 (1953)

(6) Memo S Gandon, et al, "Gamma Irradiation of Insulating Materials", ANL-OCS-75 (1947)

(7) J S Horsman, Summary of NRX Pile Irradiations, NP-1922, 1950

(8) F. E Faris, A Compendium of Radiation Effects on Solids, Vol II, NAA-SR-241, 1953

*This bibliography is not, by any means, complete It is given only to indicate some of the reports available.

[redacted]