CENTRAL RESEARCH LIBRARY
DOCUMENT COLLECTION

MARTIN MARIETTA ENERGY SYSTEMS LIBRARIES
3 4456 0349662 4

[redacted]

AEC RESEARCH AND DEVELOPMENT REPORT

ORNL-1717
Progress
6A

LABORATORY RECORDS
1954

ANALYTICAL CHEMISTRY DIVISION

SEMIANNUAL PROGRESS REPORT

FOR PERIOD ENDING APRIL 20, 1954

DECLASSIFIED
CLASSIFICATION CHANGED TO:
BY AUTHORITY OF: TID-1235
BY: M. Bauman 9/8/66

CENTRAL RESEARCH LIBRARY
DOCUMENT COLLECTION

LIBRARY LOAN COPY

DO NOT TRANSFER TO ANOTHER PERSON

If you wish someone else to see this document, send in name with document and the library will arrange a loan.

OAK RIDGE NATIONAL LABORATORY
OPERATED BY
CARBIDE AND CARBON CHEMICALS COMPANY
A DIVISION OF UNION CARBIDE AND CARBON CORPORATION
UCC
POST OFFICE BOX P
OAK RIDGE, TENNESSEE

[redacted]

[redacted]

[redacted]

ORNL 1717

This document consists of 59 pages
Copy 6 of 149 copies Series A

Contract No W 7405 eng 26

ANALYTICAL CHEMISTRY DIVISION

SEMIANNUAL PROGRESS REPORT

for Period Ending April 20, 1954

M T Kelley Director
C D Susano Associate Director

DATE ISSUED

JUN 17 1954

OAK RIDGE NATIONAL LABORATORY
Operated by
CARBIDE AND CARBON CHEMICALS COMPANY
A Division of Union Carbide and Carbon Corporation
Post Office Box P
Oak Ridge Tennessee

[redacted]

3 4456 0349662 4

[redacted]

INTERNAL DISTRIBUTION

1 C E Center
2 Biology Library
3 Health Physics Library
4 Reactor Experimental Engineering Library
5-6 Central Research Library
7 11 Laboratory Records Department
12 Laboratory Records ORNL R C
13 C E Larson
14 L B Emlet (K 25)
15 J P Murray (Y 12)
16 A M. Weinberg
17 J A Swartout
18 E D Shipley
19 E J Murphy
20 F C VonderLage
21 M T Kelley
22 E H Taylor
23 A H Snell
24 F L Culler
25 S C Lind
26 W H Jordan
27 T A Lincoln
28 C E Winters
29 A Hollaender
30 K Z Morgan
31 C P Keim
32 G H Clewett
33 A S Householder
34 D W Cardwell
35 E M King
36 C D Susano
37 G E Boyd
38 R B Briggs
39 G W Parker
40 L J Brady
41 H P House
42 O Menis
43 C H Secoy
44 L E Burkhart
45 R N Lyon
46 S A Reynolds
47 P F Thomason
48 R Rowan Jr
49 D E LaValle
50 A R Brosi
51 A F Roemer Jr
52 E I Wyatt
53 G W Leddicotte
54 C Feldman
55 T E Willmarth
56 C L Burros
57 J H Edgerton
58 L T Corbin
59 D D Cowen
60 P M Reyling
61 S D Schiffman (K 25)
62 H P Raaen
63 J C White
64 W K Miller
65 U Koskela
66 D J Fisher
67 G C Williams
68 J H Frye Jr
69 R S Livingston
70 A S Meyer Jr
71 S A Reed
72 M J Skinner
73 E P Wigner (consultant)
74 H L Hemphill
75 J A Lane
76 R W Johnson

EXTERNAL DISTRIBUTION

77 84 Argonne National Laboratory
85-89 Atomic Energy Commission Washington
90 93 Brookhaven National Laboratory
94 97 Knolls Atomic Power Laboratory
98 104 General Electric Company Richland (1 copy to A H Bushey)
105-108 Los Alamos Scientific Laboratory

[redacted]

[redacted]

109 Mound Laboratory
110-112 New York Operations Office
113 Patent Branch Washington
114 128 Technical Information Service Oak Ridge
129 132 University of California Radiation Laboratory Berkeley
133 136 Carbide and Carbon Chemicals Company (Y 12 Plant)
137 140 duPont Company Wilmington
141 142 New Brunswick Laboratory
143 144 Westinghouse Electric Corporation
145 147 Phillips Petroleum Company
148 North American Aviation Inc
149 Division of Medicine and Research AEC ORO

[redacted]

[redacted]

Reports previously issued in this series are as follows

ORNL 686	Period Ending March 31 1950
ORNL 788	Period Ending June 30 1950
ORNL 867	Period Ending October 10 1950
ORNL 955	Period Ending January 10 1951
ORNL 1088	Period Ending March 26 1951
ORNL 1113	Period Ending June 26 1951
ORNL 1129	Period Ending September 10 1951
ORNL 1233	Period Ending December 26 1951
ORNL 1276	Period Ending March 26 1952
ORNL 1361	Period Ending June 26 1952
ORNL 1423	Period Ending September 26 1952
ORNL 1474	Period Ending January 10 1953
ORNL 1547	Period Ending April 20 1953
ORNL 1639	Period Ending October 20 1953

[redacted]

[redacted]

CONTENTS

ABSTRACT ix

PRESENTATIONS OF RESEARCH RESULTS xiii

ANALYTICAL CHEMISTRY DIVISION – X 10 SITE

RESEARCH AND DEVELOPMENT 1
- Ionic Analyses 1
  - Polarography of uranium in the presence of molybdenum 1
  - Polarographic determination of uranium in stainless steel dissolver solution 1
  - Ion exchange separation and polarographic determination of uranium in shale 2
  - Elimination of copper interference in the potentiometric titration of uranium 2
  - Spectrophotometric determination of zirconium in homogeneous reactor fuel solutions 2
  - Polarographic determination of titanium in homogeneous reactor fuel solutions 2
  - Polarographic determination of copper in homogeneous reactor fuel solutions 3
  - Polarographic determination of mercury in Thorex solutions 3
  - Ion exchange separation and polarographic determination of rhenium in molybdenum ores and flue dusts 3
  - Ion exchange separation and polarographic determination of traces of europium in lithium iodide 4
  - Reductimetric titration of iron in the presence of uranium 4
  - Coulometric determination of iron in the presence of uranium 4
  - Precise volumetric determination of fluoride ion 5
  - Determination of manganese in separate valence states 5
  - Indirect determination of aluminum in aqueous solution by potentiometric titration with potassium bromate 5
  - Separate determination of aluminum nickel lead zinc and cadmium with disodium dihydrogen ethylenediaminetetraacetate 5
  - Determination of thorium in aqueous solution with disodium dihydrogen ethylenediaminetetraacetate 6
  - Determination of zirconium in aqueous solution with disodium dihydrogen ethylenediaminetetraacetate 6
- Analytical Instrumentation 7
  - Development of an automatically recording internal standard flame photometer 7
  - Compensating coulometric power supply for Karl Fischer water titrator automatic cutoff circuit 7
  - Battery operated coulometric power supplies 7
  - Externally triggered flip flop timing circuit for the falling drop densimeter 7
  - Conversion of Minneapolis Honeywell (Brown) type 40X amplifier to high input impedance 8
  - New test cell for pick up unit of TBP Varsol meter 8
  - Crystal controlled high frequency instrument for measurement of conductance of high conductance solutions 8
  - Radio frequency oscillator for the determination of high concentrations of alkali in aqueous solutions 9
  - Shielded cubicle for use in handling radioactive materials 9
  - Automatic titrator with velocity servo control of titrant addition 10
- Radiochemical Analyses 10
  - Nuclear properties 10
  - Instrumental methods 10
    - Analysis of Thorex solutions by gamma spectrometry 10
    - Gamma monitor for Thorex streams 10

[redacted]

[redacted]

Mass analysis of uranium 11
General applications 11
Analysis of radioisotopes 11
Gamma emitting impurities in products 11
Radioisotope assay comparisons 12
Fission products 12
Determination of rhodium 12
Heavy elements 12
Protactinium 12
Determination of americium 12
Reactor analyses 12
Cyclotron research 13
General research 13
Rare earth radionuclides 13
Cross sections for (p α) (p αn) (p 2p) and (p He^3) reactions 14
Angular distributions of fragments from uranium and thorium fission 14
Ion exchange and chromatography 14
Separation of tin antimony and tellurium by anion exchange 14
Activity analyses by electrodeposition 14
Copper 14
Activation Analyses 15
Neutron activation analysis methods 15
Determination of microgram and submicrogram amounts of uranium 15
Determination of submicrogram amounts of 2 4 dichlorophenoxyacetic acid 15
Determination of iodine in blood serum 15
Estimation of microgram and submicrogram amounts of gold in crude oils and petroleum distillates 15
Estimation of microgram and submicrogram amounts of thorium in soils 16
Estimations of microgram amounts of sodium in aluminum and in magnesium 16
Determination of microgram amounts of cobalt in nickel 16
Determination of isotopic ratios of copper 16
Use of fast neutron reactions for analysis 16
Use of radioactivation analysis as a qualitative or semiquantitative analytical method 16
Use of autoradiography in activation analysis 17
Determination of contaminant elements in hafnium in zirconium and in their alloys 17
Separation of zinc from cobalt by liquid liquid extraction 17
New applications of activation analysis 17
Isotopic tracer methods 18
Determination of iron and zirconium in uranium alloys by isotope dilution 18
Nuclear particle attentuation methods 18
Neutron density method for rapid determination of certain elements 18
Determination of isotopic composition of boron by neutron density measurements 18
Determination of boron in stainless steel by means of secondary neutron reactions and nuclear track emulsions 18
Spectrochemical Analyses 18
Temperatures in porous cup discharges 18
Temperature distribution across the analytical gap 18
Details of temperature behavior characteristics 19
Variations of band and line intensities across the analytical gap 20
Effect of freezing on photographic emulsion contrast factors 20
The sifter electrode and its application to the determination of boron in graphite and carbon 21

[redacted]

[redacted]

New working curves developed by the porous cup procedure 22
Inorganic Preparations 22
Special preparations 22
Phosphors 23
Optical and Electron Microscopy 23
Corrosion studies 23
Qualitative analysis by electron diffraction and microscopy 24
Particle size studies 24
Metallographic photomicrographic and surface studies 26
Autoradiography 26
Equipment modifications and changes 26
ORNL Master Analytical Manual 26

SERVICE ANALYSES 29
Ionic Analyses 29
Radiochemical Analyses 29
Activation Analyses 29
General Analyses Laboratory 29
Micro pyrohydrolysis of fluoride 29
Special analyses 31
Radioisotope Production Analyses 31
General Radiochemical Analyses 32
Laboratory and Semi Works Control Group 32
Hot Pilot Plant Control Laboratory 33
Isolation Analyses 33
High Radiation Level Analytical Facility 33

ANALYTICAL CHEMISTRY DIVISION – Y 12 SITE

RESEARCH AND DEVELOPMENT 35
ANP Analytical Chemistry 35
HRP Analytical Chemistry 35
Analysis of slurries 35
Analysis of uranyl sulfate solutions 35
Analysis of corrosion products from stainless steel 37
HRP Materials Preparation 37
Quality Control 38

SERVICE ANALYSES 39
ANP Analytical Chemistry 39
HRP Analytical Chemistry 39
Raw Materials Chemistry 40
Miscellaneous Analyses 40

[redacted]

[redacted]

ABSTRACT

ANALYTICAL CHEMISTRY DIVISION – X 10 SITE

Instrumentation has been emphasized in the development of new ionic methods The polarographic method was used to determine uranium in stainless steel dissolver solution and in Chattanooga shale Molybdenum was shown to cause a large positive error in the polarographic determination of uranium a way of eliminating this interference was devised The polarographic method was also applied to the analysis of Homogeneous Reactor fuel for copper and for titanium and the analysis of Thorex process solutions for mercury In conjunction with ion exchange separations the polarographic method was used to determine rhenium in molybdenum ores and in flue dusts and to determine traces of europium in lithium iodide crystals A method of ion exchange separation and Thoron spectrophotometric determination was developed for zirconium in Homogeneous Reactor fuel Reductimetric and coulometric titration methods are described for iron in the presence of uranium a new circuit for an automatic timer (Autid) was devised for use in the coulometric method Titration with disodium dihydrogen ethylenediaminetetraacetate (Versenate) was applied to the separate potentiometric determinations of aluminum nickel lead zinc and cadmium and to the determination of thorium and of zirconium by use of alizarin red S indicator A precise automatic titration method for fluoride was developed A volumetric method employing simultaneous equations was used to determine manganese in its separate valence states Copper interference in the potentiometric titration of uranium was eliminated by an electroplating procedure

Development of the optical section of the automatically recording internal standard flame spectrophotometer includes evaluation of a transmission type interference filter as internal standard monochromator and of the type CV 148 infrared image converter tube A Bausch and Lomb grating monochromator now in use as a sample monochromator provides greater spectral purity and a considerable increase in sensitivity over monochromators previously used A circuit that automatically cuts off the coulometric titration current and the timing clock when the end point is reached has been added to the compensating coulometric power supply for a Karl Fischer water titrator Battery operated power supplies have been built for Karl Fischer water titration An externally triggered flip flop timing circuit has been developed for the falling drop densitometer The falling drop triggers the flip flop circuit by means of a pulse that is produced when the drop interrupts a light beam directed onto a phototube The fall time in an immiscible medium between two such points is registered on a clock and related by a calibration curve to the density of the drop Through minor changes of the input circuit the input impedance of a Brown type 40X amplifier has been raised to 2 5 megohms A 1 mv Brown recorder operates properly when the modified amplifier is substituted for the standard low impedance amplifier A new test cell has been developed for the pick up unit of the TBP Varsolmeter A standard type immersion capacitor is substituted for the original immersion capacitor that was specially built of concentric cylinders A new high frequency oscillator that employs a nonimmersed sensing element has been developed for measuring the concentration of highly conducting alkali solutions For stability the oscillator is crystal controlled and amplitude regulated Also a new tuned line radio frequency oscillator was developed for the determination of the alkali concentration of aqueous solutions A parallel transmission line oscillator is used The solution being tested is placed between the lines therefore the necessity of immersing the electrodes in completely eliminated A lead and concrete shielded cubicle for use in handling radioactive materials has been built Equipment currently installed in the cubicle includes dissolution apparatus a servo pipetor and an automatic titrator The new automatic velocity servo potentiometric titrator has been found to work satisfactorily for the determination of uranium and of sulfate

Nuclear properties of several radioisotopes are under study The scintillation spectrometer is proving very useful for rapid nondestructive activity analyses Several examples of its use are presented Agreement in assay results of common radioisotopes continues to be good A method for the determination of rhodium in fission product mixtures was developed Solvent extraction methods for protactinium and americium have been developed and have been applied to routine analyses Calculation of burn up of uranium in reactors from

[redacted]

uranium and Cs^{137} analytical data is becoming increasingly important A vigorous program in radiochemistry connected with cyclotron research has continued two staff members are now assigned full time to this program Successful separation of tin antimony and tellurium has been carried out by anion exchange A program in determination of radioelements by electrodeposition has begun the determination of radiocopper is currently under investigation

The application of neutron activation analysis to the determination of microgram and submicrogram quantities of uranium in ores and on filter paper thorium in soils and waters gold in crude oils and petroleum distillates 2 4 dichlorophenoxyacetic acid on filter paper and sodium in aluminum and magnesium is discussed In addition activation analysis has been applied to the determination of isotopic ratios of copper in metallic copper and has been used in conjunction with autoradiography to identify inclusions in ultra pure metals Besides these specific applications activation analysis has been used in the routine determination of contaminant elements in a variety of materials Isotopic tracer and isotope dilution methods of analysis have been used to determine iron and zirconium in uranium alloys A nuclear particle attenuation method that utilizes neutron density measurements has been developed and applied to the isotopic analysis of boron Another method based on the use of secondary neutron reactions and nuclear type photographic emulsions is being studied for possible application to the analysis of metals and alloys for low concentrations of boron A liquid liquid extraction method for the quantitative separation of zinc from cobalt and from most of the elements of the first transition series has been developed The qualitative and semiquantitative analysis of materials by the neutron activation method appears to be promising In this development a method is being studied in a conventional qualitative analysis scheme and an ion exchange separation are used to separate the induced radioactivities preliminary to their identification Inquiries regarding new applications of activation analysis and other nuclear methods of analyses are summarized

In the field of spectrochemical analysis studies of porous cup discharge temperatures have shown that in a pulsed d c discharge temperatures are highest near the porous cup electrode surface and decrease toward the counter electrode A minimum exists at approximately 0 7 mm from the counter electrode the temperature at the counter electrode is usually 4200 to 4400°K The addition of salts to the liquid being analyzed affects the temperature in a manner that depends on the zone of the discharge studied and on the ionization potential of the metal in the salt Comparison between individual rolls of a single batch of SA1 emulsion stored at 40°F (4 4°C) and at 0°F (−17 8°C) has shown that the contrast factor is unchanged after a year of storage at 0°F but that increases in contrast occurred when the film was stored one year at 40°F A sifter electrode has been devised for circumventing volatilization difficulties encountered in the determination of boron in carbon and graphite It consists of a right cylindrical cup the bottom of which is perforated It is filled with the powder to be analyzed and used as the upper electrode with a ⅛ in dia graphite counter electrode Excitation from a high voltage spark source causes the powder to sift through the perforations and become excited as it is struck by the spark New analytical curves have been developed for europium niobium ruthenium silicon titanium and vanadium by the porous cup technique

New inorganic compounds that were prepared were $Sm^{152}(C_2H_5SO_4)_3$ and $NaCu(UO_2)_3(C_2H_3O_2)_9\ 9H_2O$ Solid solutions of UF_3 in $LaCl_3$ and of UCl_3 in $LaCl_3$ and series of manganites cobaltites and complex fluorides were made Lithium iodide phosphors were prepared by the use of five new activators All these preparations were relative to work in the Physics and Chemistry divisions

Optical and electron microscopy and electron diffraction techniques have been applied to the study of the internal surfaces of test bombs exposed to corrosive conditions procedures for the routine examination of such surfaces have been established Examples of the usefulness of the procedures are given Qualitative analyses by electron diffraction and chemical microscopy and particle size studies by optical and electron microscopy are described Uses of autoradiography are mentioned The construction of a new metal evaporator for electron microscopic shadow casting is announced

A new section Section 5 Nuclear Analyses Methods is being added to the *ORNL Master Analytical Manual* Forty three new methods have been issued to the Manual Up to date lists of the methods yet to be written for the Manual were issued

[redacted]

Analytical service analyses are summarized in tabular form special problems are discussed briefly A new apparatus for fluoride determination by micro pyrohydrolysis and the related instrumentation is described The service of vacuum fusion analysis has been established Recently observed half life values are reported for six radionuclides The status of work on the recently approved High Radiation Level Analytical Facility is indicated A summary is included of the extent of interest in activation analysis services

ANALYTICAL CHEMISTRY DIVISION – Y 12 SITE

Relative to the ANP Project methods have been developed for the determination of the oxidation states of corrosion products in ARE fuels and fuel solvents and for the determination of UF_3 and UF_4 in ARE fuels

The principal project of the HRP Materials Preparation Group has been the preparation of a non abrasive or soft thorium oxide The possibility of preparing $Th(OH)_4$ was investigated and a tentative method of preparation has been recommended Other thorium compounds that were prepared for special work in the slurry studies were thorium orthophosphate thorium nitrate thorium oxalate hexahydrate and thorium pyrophosphate

Relative to the HRP procedures were evaluated and developed for the analysis of slurries of uranium and thorium solutions of uranyl salts that contained additives and corrosion products and corrosion products that resulted from the exposure of stainless steel and steel alloys in the dynamic and static tests A polarographic method for the determination of titanium in thorium oxide slurries was investigated The method of dissolution of the slurries was modified to eliminate interference in the tetraphenylarsonium thiocyanate method for the determination of cobalt Interferences in the spectrophotometric method for the determination of uranium(IV) in UO_3 slurries were studied

The $\alpha\alpha$ bipyridyl method for iron and the periodate method for manganese were modified to eliminate the interferences of chromium and nickel in solutions of uranyl sulfate The use of stannous chloride or cadmium amalgam as a reductor to replace the zinc reductor in the zinc–ceric sulfate method for the determination of uranium in uranyl sulfate solutions was investigated A scintillation counter technique was adapted to determine samarium in solutions of uranyl sulfate

Colorimetric methods were used to determine chromium and nickel in milligram amounts of steel and steel alloys An electrographic technique was used to determine small amounts of chromium in a metallic coating

A review and tabulated summary of the quality control data for the period is presented

A tabulation of the 47 358 determinations reported by the service groups indicating the distribution of work by divisions is included The requirements of the REED and Materials Chemistry Division accounted for more than 85% of the service work

[redacted]

[redacted]

PRESENTATIONS OF RESEARCH RESULTS

Several of the presentations listed below were made jointly with members of other divisions In these cases the member of the Analytical Chemistry Division is indicated by a single asterisk

OPEN LITERATURE PUBLICATIONS

AUTHOR(s)	TITLE	PUBLICATION
B ooksbank W A G W Leddicotte	Ion Exchange Separations of T a e Impu ities	*J Phys Chem* 57 819 (1953)
Brooksb nk W A G W Leddicotte H A Mahlman	Analysis for Trace Imp it es by Neutron Act v t on	*J Phys Chem* 57 815 (1953)
Cohen B L T H H ndley	An Exper mental Se rch for A Stable D neutron	*Phys Rev* 92 101 (1953)
Cohen B L T H Handley	Exper ment l St d es of (*p t*) React ons	*Phys Rev* 93 514 (1954)
Feldm n C	Suggested P a t ce for Photog aph c Photomet y n Spect o hem cal An ly is Method E 2 SM 2 2	*Methods fo Emission Spectrochemical Ana lysis* A S T M Philadelphia Oct 1953
Handley T H E L Olson	Erbium 163 nd Th l um 165	*Phys Rev* 92 1260 (1953)
Handley T H E L Olson	New R d oactive N clide of the R e Ea ths	*Phys Rev* 93 524 (1954)
Kahn B W S Lyon	De ay of Rh^{106}	*Phys Rev* 92 902 (1953)
Kahn B W S Lyon	Use of Sc nt llat on Spect ometer n R dio chem cal An lys	*Nucleonics* 11 No 11 61 (1953)
Kraus K A F Nelson G W Smith	Anion Exchange Studies IX Adsorbability of a Number of Metals in Hydrochloric Acid Solution	*J Phys Chem* 58 11 (1954)
Lyon W S J J Mann ng	Rad oa t ve S^{31}	*Phys Rev* 93 501 (1954)
Manning D L J C Wh te	Determ nat on of Traces of Hydrogen Fluo ide n Ine t Gases	*Anal Chem* 25 1648 (1953)
Ma shall W L H W Wright C H Secoy	A Phase Study App ratus for Sem m cro Use Above Atmospheric Pressure	*J Chem Ed* 31 34 (1954)
Reynolds S A W A Brooksbank Jr	Thallium 204 as a Standard for Radioassays	*Nucleonics* 11 No 11 46 (1953)
Wheler A G Jr S A Reynolds W A Brooksbank Jr	Thall um as a Reference Standard fo Beta Rad oact vity	*J Am Water Works Assoc* 46 79 (1954)

[redacted]

[redacted]

AUTHOR(s)	TITLE	PUBLICATION
Wh te J C W J Ross R Row n Jr	Determ at on of Oxygen n Sod um	*Anal Chem* 26 210 (1954)
Wh te J C C K Talbott d L J B ady	D solut on of NaK	*Anal Chem* 26 (1954)

ORAL PRESENTATIONS

AUTHOR( )	TITLE	PRESENTED AT
De n J A S A Reynolds [a]	Prelim n y Stud es of the Sepa at on and Dete m nat on of B smuth Ant mony and T n by Cont olled Cathode Electroanaly s s	Reg onal Co cla e Amer ca Chem l Soc ety New O leans La De 12 1953
K hn B W S Lyon [a]	Gamma R y Spe t oscopy n Analyt al R d ochem st y	Reg onal Concl ve Ame a Chem l Soc ety New Orle ns L Dec 11 1953
Leddicatte G W	Act vation An ly e	F fth Annu l Nuclea S e ces Semina on N cle Reacto s Oak R dge Tenn sponso ed by Off ce of Nav l Resea ch De 3 1953
Ledd cotte G W H A Mahlman	The Dete m tion of T ce Eleme ts in Crude Oils and D st llat on P od ts by Rad o ct vat on A lys s	Reg on l Co l ve Ame Chem l Sa ety New O lea s La De 11 1953
Ledd atte G W S A Reynalds	The Use of Nu lea Te hniques n Ana lyt cal Chem stry	Region l Concl ve Ameri n Chem cal So ety New O le La Dec 11 1953
M hlman H A G W Ledd catte [a]	The Determ nat on of T ace Elements n Gr ss and G n by R d oa t vat on A ly	Reg a al Co l ve Amer c n Chem c l So ety New O le ns La Dec 11 1953

[a] Speake

TOPICAL REPORTS

AUTHOR(s)	TITLE	REPORT NUMBER
Cogb ll E C J C White C D S s no	*Determination of Phosphate in Perchloric and Sulfu ic Acid Solutions of Uranium Phosphates*	ORNL 1644 (Oct 30 1953)
Kelley M T H L Hemph ll D M Collier	*An Improved Fluorophotometer for Determi nat on of Uranium in Fused Sodium Fluor de Pellets*	ORNL 1445 (Feb 8 1954)

[redacted]

[redacted]

AUTHOR(s)	TITLE	REPORT NUMBER
Moo e F L	*Separation of Protactinium and Niobium by Liquid Liquid Extraction*	ORNL 1675 (March 4 1954) (secret)
Peterson S R W Stoughton W F K effe S A Reynolds	*Fundamnntal Chemistry for Nuclear Reactor Engineers*	ORNL CF 53 11 22 (Dec 7 1953)
Reynolds S A G W Leddicotte W S Lyon	*Activation Cross Sections of Iron*	ORNL CF 54 1 29 (Jan 8 1954)
Reynolds S A E I Wyatt	*Measurement of Activity and Isotopic Abundance of Carbon 14 in Barium Carbonate*	ORNL CF 53 10-104 (Oct 16 1953)
Vick M M S A Reynolds	*Distribution of Radioelements in a Qualita tive Analysis Scheme*	ORNL CF 53 12 110 (Dec 18 1953)

METHODS ISSUED TO *ORNL MASTER ANALYTICAL MANUAL*

AUTHOR(s)	TITLE	NUMBER(s)	DATE
Coope J H	Plutonium Potent omet ic Ceric Sulfate Method	9 0432620	8-7 53
Fisher D J W R Laing J H Edgerton H G Dav s A S Meyer Jr	Flame Photometers S ngle Beam	1 003050 9 003050	8-14 53
Gaitanis M J	Phosphate Spectrophotometr c Phosphomolybdate Method	1 216010 9 00716010	8-3 53
Gaitanis M J	Uran um in Purex Process Solut ons Spect ophotometric Ammonium Thio-cyanate Method	9 052205	11 11 53
Koskela U M J Gaitanis	Uranium in HRE Samples Spect o photometric Ammonium Thiocyanate Method	9 082207	11 11 53
Manning D L	Hydrogen Fluoride in Inert Gases Con ductometric Method	1 220003 9 09210	8 10 53
McCutchen R L	Stat stical Treatment of Data	1 0060 9 0050	7 3-53
Mille H H	Pola ograph ORNL Model Q 1160 H gh Sensitiv ty Recording	1 003040 9 003040	12 11 53
Ross W J J C White	Uranium Trifluoride in the Presence of Ur nium Tetrafluoride Hyd ogen Evolu tion Method	9 0922002	8-20 53

[redacted]

[redacted]

AUTHOR(s)	TITLE	NUMBER(s)	DATE
Walker R L P F Thomason	Sod m Ind ect Spect ophotomet c U anyl Th ocyanate Method	1 217910 9 00717910	5-18 53
Walke R L	Totol Plutonium Thenoylt fluoracetone Ext act on Method	2 31621 9 008621	5-18 53
W lker R L	Spec fi G avity Falling Drop Method	1 100 9 00600	6-25 53
W lke R L	Uran um Fluoromet c Method	1 219240 9 00719240	7 10 53
Walker R L	Thorium Gr vimet ic Oxalate Method	1 218750 9 00718750	7 30-53
W lke R L	Alum um n Tho ex P ocess Sol t on Ind e t Ion Exchange Method	9 0122021	9 25-53
Walker R L	Gross Alpha	9 002301 9 0733000	9 30-53
Walke R L	Gros Beta Activ ty in Aqueous or O gan c Solut ons	9 012302 9 052302	10 8 53
Wh te J C	Manganese Spectrophotometr c Pe iodate Method	1 214810 9 00714810	7 27 53
White J C	Beryllium Volumetr c Fluoride Method	1 211070 9 00711070	8 5-53
Wh te J C	Fluo ide Lead Chlo ofluo de Method	1 212850 9 00712850	8 12 53
Wyatt E I	Th II m 204	9 0733861	5 25-53
Wyatt E I	I on 55 59	9 0733411	5 25 53
Wyatt E I	Technet um 99 Chlo ofo m Ext act on Method	9 0733831	7 1 53
Wyatt E I	Iod ne 131 A tiv ty Gamma Ion Ch mbe Method	9 0733392	Rev sed 7 19 53
Wyatt E I	Iodine 131 Gamma Scintillat on Count ng Method	9 0733393	8 5-53
Wyatt E I	Gross Gamma	9 0733002	8 14 53
Wyatt E I	Tin 113	9 0733891	9 21 53
Wyatt E I	Nickel 63	9 0733541	9 21 53
Wyatt E I	Rad o odate nd Radio odide n Iodine Products Precipitation Method	9 0733394	9 22 53

[redacted]

[redacted]

AUTHOR(s)	TITLE	NUMBER(s)	DATE
Wyatt E I	Ruthenium Activity Permanganate Method	9 0733732	9 22 53
Wyatt E I	Radioactive Impurities in Silve 110 Product Solutions	9 0733782	9 22 53
Wyatt E I	Gross Beta	9 002302 9 0733001	10-1 53
Wyatt E I	Barium 140 Gamma Ion zation Chamber Method	9 0733082	10 9 53
Wyatt E I	Bar um 140 Gamma Scintillation Counter Method	9 0733083	10-7 53
Wyatt E I	Small Amounts of Stront um 89 in Aqueous Solut ons of Stront um 90	9 0733802	10 8 53

[redacted]

[redacted]

ANALYTICAL CHEMISTRY DIVISION X 10 SITE

RESEARCH AND DEVELOPMENT

IONIC ANALYSES

P F Thomason

Polarography of Uranium in the Presence of Molybdenum

P F Thomason

Molybdenum in extremely small concentrations (~0 1 μg/ml) has been shown[1] to cause an increase in the apparent diffusion current of the polarographic wave of uranium [U(VI) ⟶ U(V)] in dilute HNO_3 Because it was thought that some highly radio active process solutions might contain enough molybdenum (~0 1 μg/ml) from fission products to interfere with the polarographic determination of uranium a method of eliminating this interference was investigated

Polarography of a 0 1 *N* HNO_3 solution of mo lybdenum concentration of 1 μg/ml gave an odd bell shaped polarogram from −0 3 to −1 0 v vs the S C E Solutions of uranium concentration of 50 μg/ml in 0 1 *N* HNO_3 and some solutions that con tained various amounts of molybdenum in addition to the uranium were polarographed The results are shown in Table 1 These data show that a mo lybdenum concentration as small as 0 1 μg/ml gives a large positive error in the diffusion current of the apparent wave of uranium [U(VI) ⟶ U(V)]

Furman and Haight[1] state that molybdenum does not give a polarographic wave in a supporting elec trolyte of 1 *M* hydroxylamine hydrochloride 5% sodium tartrate and 0 01% gelatin that is adjusted to pH 5 0 Several samples that contained uranium and molybdenum were polarographed in this support ing electrolyte the results are shown in Table 2 These data indicate that the molybdenum does not interfere when this supporting electrolyte is used therefore its use will be tried in the polarographic determination of uranium in process samples in the near future

[1] N H Furman a d G P Haight Jr *The Polarographic Determinat on of Uranium* M 4245 (Oct 1947)

TABLE 1 EFFECT OF MOLYBDENUM ON THE DIFFUSION CURRENT OF URANIUM IN 0 1 *N* HNO_3

SAMPLE NUMBER	MOLYBDENUM (μg/ml)	i_d OF APPARENT URANIUM WAVE (μa)
1	None	0 55
2	None	0 57
3	1 0	1 64
4	0 1	0 70
5	0 1	0 69

Composition of samples 0 1 *N* HNO_3 50 μg of urani num pe m ll leter molybden m as d ated

Polarographic Determination of Uranium in Stainless Steel Dissolver Solution

P F Thomason

A rapid and precise method for the determination of uranium(VI) in a perchloric acid solution that

TABLE 2 DIFFUSION CURRENT OF URANIUM IN THE PRESENCE OF MOLYBDENUM IN A SOLUTION OF 1 *M* HYDROXYLAMINE HYDROCHLORIDE 5% SODIUM TARTRATE AND 0 01% GELATIN

SAMPLE NUMBER	MOLYBDENUM (μg/ml)	i_d OF URANIUM WAVE (μg)
1	None	0 42
2	None	0 41
3	1 0	0 43
4	1 0	0 40

Uranium in each sample 50 μg/ml pH of suppo t ng electrolyte 5 0

[redacted]

also contained chromium nickel and iron was needed for use in the irradiation studies of stainless steel–uranium oxide fuels that were being conducted by a group from the General Electric Company Uranium [U(VI) ⟶ U(V)] gives a well defined polarographic wave[1] $E_{1/2} \cong -0.34$ v vs the S C E in a supporting electrolyte of 1 M hydroxylamine hydrochloride 5% sodium tartrate and 0 01% gelatin solution Because the iron(III) and chromium(VI) that are obtained when stainless steel is dissolved in $HClO_4$ must be reduced to iron(II) and chromium(III) before the uranium [U(VI) ⟶ U(V)] wave can be obtained an aliquot of the sample is cautiously warmed with a solution of approximately 2 M hydroxylamine hydrochloride for a few minutes before the addition of the sodium tartrate and gelatin The solution is then diluted to a known volume with distilled water and analyzed polarographically by use of the standard addition technique Synthetic samples that contained known amounts of uranium were analyzed with a relative standard error of ±3% at the 95% probability level

Ion Exchange Separation and Polarographic Determination of Uranium in Shale

H H Miller

As a comparison method for the estimation of uranium in a Chattanooga shale sample an ion exchange separation and polarographic method was developed The shale was fused with Na_2CO_3 the melt dissolved in HCl and the solution filtered to remove the SiO_2 The filtrate was neutralized with NH_4OH and then made 6 M in HCl This solution was passed through a chloride form Dowex 1 resin column and washed through the column with 6 M HCl The uranium was eluted from the column with distilled water the eluate was made 0 1 M in HCl and polarographed A measurable but not well defined uranium wave was obtained The results indicated that the uranium concentration in the shale was 95 μg/g which agreed with results found by means of a fluorometric method

Elimination of Copper Interference in the Potentiometric Titration of Uranium

W D Shults II P F Thomason

If copper is present high results are obtained when uranium is determined by oxidimetric titration with ceric sulfate because copper is titrated along with uranium A method for the removal of copper interference from the Homogeneous Reactor type of samples was requested by personnel of the HRE Laboratory Copper was removed by stirring a sulfate solution of the sample in contact with a coil of clean cadmium metal for 10 min Copper is plated onto the cadmium whereas the uranium is reduced to the uranium(IV) state A portion of the solution is then titrated in the usual way Use of a chloride plating medium causes erratic results in the titration of uranium The coils are cleaned by momentary immersion in 25 vol % HNO_3 The plating and cleaning steps can be carried out remotely

Spectrophotometric Determination of Zirconium in Homogeneous Reactor Fuel Solutions

A D Horton

A method has been developed for the determination of zirconium in Homogeneous Reactor fuel solutions Zirconium is separated from uranium by passing a 5 M HCl solution of the sample through a chloride form Dowex A 1 ion exchange resin Uranium remains on the column and zirconium passes through quantitatively The effluent is evaporated to dryness the residue is dissolved in 0 350 ml of concentrated HCl and the zirconium in the sample is determined by the Thoron spectrophotometric method[2]

The range of the method is 10 to 100 μg of zirconium per sample The volume range is limited only by such factors as radioactivity vessel size and time The resin capacity is approximately 4 meq of uranium per gram of resin suitable column size can be determined by consideration of the resin capacity plus the factors mentioned above The relative standard deviation of the method which will be described fully in a forthcoming topical report is 4 2%

Polarographic Determination of Titanium in Homogeneous Reactor Fuel Solutions

P F Thomason

Titanium is being considered as a structural material for the HRT therefore an analytical method will be required for the determination of 10 to 100 ppm of titanium in the fuel solution in order to evaluate the resistance of titanium to corrosion

[2] A D Horton Spectrophotometric Determination of Zirconium *Anal Chem* 25 1331 (1953)

Graham and Maxwell[3] recommend the polarographic determination of titanium in a supporting electrolyte of 1 0 M tartaric acid in 0 5 M H_2SO_4 They separated many interfering elements by use of a mercury cathode they stated however that uranium interfered and was not removed by the mercury cathode separation Uranium can be adsorbed on sulfate form Dowex A 1 resin from a very dilute (~0 01 N) H_2SO_4 solution titanium passes through the ion exchange column When tartaric acid is added to the effluent the pH of the solution adjusted to about 5 0 and the solution polarographed a well defined polarographic wave for titanium results at $E_{1/2} \cong$ -0 55 v vs the S C E

A synthetic Homogeneous Reactor fuel solution of 40 mg of uranium per milliliter and 0 01 mg of titanium per milliliter (~ 10 ppm Ti) was analyzed for titanium by this procedure the result indicated a titanium concentration of 0 009 mg/ml (90% recovery) This method appears to be promising and will be studied further

Polarographic Determination of Copper in Homogeneous Reactor Fuel Solutions

A D Horton P F Thomason

A modification of Pecsok s method[4] for the polarographic determination of copper in 0 25 M disodium dihydrogen ethylenediaminetetraacetate (Versenate) solution has been used to determine copper in Homogeneous Reactor fuel solutions One volume of fuel solution is adjusted to a pH of approximately 3 with Na_2CO_3 and diluted with an equal volume of 0 5 M Versenate solution that has been adjusted to pH 7 0 with Na_2CO_3 and then to pH 8 5 with NaOH A convenient aliquot of the Versenate solution of the sample is pipeted into the polarographic cell and copper is determined at $E_{1/2} \cong$ -0 55 v vs the S C E The dropping mercury electrode is used as the indicating electrode

The sequestering action of the Versenate solution at pH 8 5 causes a negative shift in the half wave potentials of copper and uranium and this shift results in a separation of the half wave potentials of about 0 25 v Other metals in Homogeneous Reactor fuel solutions do not interfere

Test volumes of the sample are limited only by practicality and the quantity range of the method is limited only by the sensitivity of the polarograph used for the determination The relative standard deviation of the method is 0 65% for a copper concentration of 10 μg/ml The method will be described fully in a forthcoming topical report

Polarographic Determination of Mercury in Thorex Solutions

H H Miller

The polarographic determination of mercury is complicated by the reduction of mercury ions at zero potential at the dropping mercury electrode which prohibits the formation of a residual current However mercury in the concentration range from 10 to 50 μg/ml can be estimated with a recovery of ±10 to 15% by measurement of the wave height from zero current to the diffusion current plateau This method was used for determining mercury in Thorex type solutions that contained 1 5 M Th 0 6 M Al 0 075 M F^- and 6 0 M HNO_3 Synthetic Thorex type samples that contained the same concentrations of these constituents and 40 ppm of mercury gave a mercury recovery of 40 ± 4 μg/ml

Ion Exchange Separation and Polarographic Determination of Rhenium in Molybdenum Ores and Flue Dusts

H H Miller

A procedure for the determination of small quantities of rhenium in molybdenites and flue dust is being developed at the request of G E Boyd of the Chemistry Division In 4 N $HClO_4$ solution ReO_4^- gives a well defined wave at $E_{1/2} \cong$ -0 4 v vs the S C E and the diffusion current is proportional to the ReO_4^- concentration [5]

The ore or flue dust is fused with Na_2O_2 in an iron or zirconium crucible the melt dissolved in distilled water and the solution passed through a column of hydroxide form Dowex 1 ion exchange resin the MoO_4^{--} is washed through the column with 1 N NaOH and finally the ReO_4^- is eluted with 2 N $HClO_4$ The eluate that contains the ReO_4^- is made 4 N in $HClO_4$ and diluted to a known

[3] R P Grah m and J A Maxwell Dete m nat on of T tan um in Rocks and Minerals *Anal Chem* 23 1123 (1951)

[4] R L Pecsok Polarography of Copper in Ethylene d am netetr cet Ac d Solutions *Anal Chem* 25 561 (1953)

[5] J J Lingane Polarographic Investigation of Rhen um Compounds I Reductio of Perrhenate Ion at the Dropp ng Mercu y Elect ode *J Am Chem Soc* 64 1001 (1942)

volume then it is polarographed The standard addition technique is used for estimating the rhenium concentration as Re

It is necessary to remove almost 100% of the molybdenum from the sample because MoO_4^{--} reduces before ReO_4^- and gives a large wave Neither the volume of 1 *N* NaOH necessary to completely remove the MoO_4^{--} nor the precision of the method has been determined Work on the method is being continued

Ion Exchange Separation and Polarographic Determination of Traces of Europium in Lithium Iodide

H H Miller

In samples of LiI crystals in which the weight ratio of Eu to LiI is 1 100 or greater the europium can be estimated by polarographing an aqueous solution of the LiI in 0 1 *M* NH_4Cl as the supporting electrolyte [6] However when the weight ratio is less than this say 0 1 100 the polarograms of the europium [Eu(III) ⟶ Eu(II)] are no longer well defined If at this lower ratio sufficient europium is present to give a measurable wave the large amount of LiI that is necessarily present with it gives a large residual current which distorts the Eu(III) ⟶ Eu(II) polarographic wave

A Dowex 50 ion exchange technique has been devised with the assistance of F Nelson of the Chemistry Division which separates traces of europium from LiI Preliminary evaluation was made by use of Eu^{155} and a gamma scintillation counter An aqueous solution of the LiI that contains europium is placed on a column of chloride form Dowex 50 and the LiI is washed through the column with 0 5 *M* HCl The europium(III) is eluted with 6 *N* HCl then the eluate is evaporated to a volume of about 1 ml neutralized with NH_4OH to the litmus end point, made up to a known volume, and polarographed The NH_4Cl molarity of the supporting electrolyte is not critical The recovery of europium from a sample that contained 10 μg was 10 ± 0 5 μg

[6] H H Miller Polarographic Determination of Europium in Lithium Iodide *Anal Chem Semiann Prog Rep Oct 20 1953* ORNL 1639 p 1

[7] C N Reilley W D Cooke and N H Furman Derivative Polarographic Titrations *Anal Chem* 23 1223 (1951)

Reductimetric Titration of Iron in the Presence of Uranium

W D Shults II P F Thomason

The reductimetric titration of iron in the presence of uranium has been investigated by use of uranous sulfate solution as titrant Iron is oxidized to iron(III) with ceric sulfate which is added in excess and the solution is titrated potentiometrically with uranous sulfate at 50 C under a blanket of nitrogen Two breaks in the titration curve are obtained the first occurs when the excess oxidant is exhausted and the second occurs when the iron(III) is exhausted the amount of titrant required between these two breaks is indicative of the total amount of iron present

This titration was studied both with the usual platinum wire electrode–S C E system and with an electrode system consisting of two polarized platinum wires [7] The advantage of using the pair of polarized electrodes is that the potential change at each break may be controlled by proper choice of the polarizing voltage With the platinum wire system the first break was reversible whereas the second break was irreversible

This titration method should be useful primarily for the determination of total iron in the presence of large amounts of uranium Satisfactory and reproducible breaks were obtained with both types of electrode systems even when the ratio by weight of uranium to iron was 10 1 The precision of the method was not determined because this study was made primarily as a basis for the development of a coulometric method for the determination of iron in the presence of uranium which is described in the next section

Coulometric Determination of Iron in the Presence of Uranium

W D Shults, II P F Thomason
M T Kelley

An investigation of the titration of iron with electrolytically generated uranium(IV) is being made by use of a uranyl sulfate solution as the source of uranium(IV) Preliminary work has been done with a pair of polarized platinum wires used in a way similar to the derivative polarographic indication method described by Reilley *et al* [7] The potential change during the titration was followed with a Brown recording potentiometer The iron

solution was added to a relatively concentrated uranyl sulfate (uranium concentration approximately ten times that of the iron concentration) solution and oxidized by the addition of an excess of ceric sulfate Titrations were made by passing a constant current from a group of batteries through the solution so that the UO_2^{++} was reduced to uranium(IV) Two breaks were obtained during each titration the first reversible break occurred when the excess oxidant was completely reduced and the second irreversible break occurred when the iron(III) was completely reduced The results obtained indicated that the electrolytic reduction of UO_2^{++} to uranium(IV) and the subsequent reaction of uranium(IV) with cerium(IV) and with iron(III) proceed at very nearly 100% current efficiency when the titration is carried out at 50 C under a blanket of nitrogen

M T Kelley suggested a circuit for an automatic timing device (Autid) that would start a clock on reversal of the potential at the first break and stop the clock at the mid point of the second break A breadboard model of the Autid has been constructed and is now being evaluated by use of standard iron solutions Results obtained to date indicate that this method has good precision and accuracy in the milligram and submilligram quantity ranges It is hoped that this method can be applied to the determination of plutonium in uranium solutions

Precise Volumetric Determination of Fluoride Ion

J M Chilton

A critical study was made of published methods for the volumetric determination of fluoride ion that were thought to be applicable for use on a recording automatic titrator such as the Dow Precision titrator The most satisfactory titrant was found to be aluminum ion and reagent grade potassium alum was an excellent standard The best indication of the end point was a decrease in the pH of the solution A paper describing the complete procedure including the separation of fluoride from interferences is being prepared for publication

[8] R Pribil Z Koudela and B Matyska Uses of Complexones n Chemic l Analys s XIII Potentiometric De te m nat on of Ce ta n C t ons by Means of Complexone III Solut ons *Collection Czechoslov Chem Communs* 16 80 (1951)

[9] G W C M lner and J L Woodhead *The Volumetric Determination of Aluminum in Non Ferrous Alloys* AERE CR 1278 (1953)

Determination of Manganese in Separate Valence States

J M Chilton A D Horton

A request was received from members of the Physics Division for the determination of total manganese and manganese(IV) in calcium manganite and lanthanum manganite samples Total manganese was determined by dissolution of the sample oxidation of the manganese to permanganate with bismuthate and titration of the permanganate with iron(II) Another aliquot of the sample was treated with an excess of iron(II) thus all manganese was reduced to manganese(II) The excess of iron(II) was then determined with standard permanganate The amounts of manganese(IV) and of manganese(III) were determined by the use of simultaneous equations

Indirect Determination of Aluminum in Aqueous Solution by Potentiometric Titration with Potassium Bromate

W J Wolkowitz

An indirect method for the determination of aluminum has been developed whereby aluminum is precipitated as the 8 hydroxyquinolate the precipitated quinolate dissolved in acid and the liberated 8 hydroxyquinoline titrated potentiometrically with standard bromate solution A Beckman model K automatic titrator is used with platinum indicator and calomel reference electrodes and the voltage at the equivalence point is 747 mv The relative standard deviation of the method is 0 3% when a total of approximately 50 mg of aluminum is determined

Separate Determination of Aluminum Nickel Lead Zinc and Cadmium with Disodium Dihydrogen Ethylenediaminetetraacetate

W J Wolkowitz

Pribil *et al* [8] have suggested that since disodium dihydrogen ethylenediaminetetraacetate (Versenate) forms stable complexes with aluminum nickel lead zinc and cadmium it should be possible to analyze for these metals by adding excess Versenate and potentiometrically back titrating the excess with standard ferric chloride solution Milner and Woodhead[9] have shown that aluminum can be determined with Versenate but they suggest that a

visual indicator salicylic acid which forms a colored complex with free ferric ion gives better results Aluminum nickel lead zinc and cadmium have been determined separately by use of salicylic acid as indicator The range is from 30 to 100 mg of metal The solutions were buffered with ammonium acetate to a pH of 6 5 The results of the analyses of various shelf chemicals are given in Table 3

Determination of Thorium in Aqueous Solution with Disodium Dihydrogen Ethylenediaminetetraacetate

W J Wolkowitz

The method of Fritz and Ford [10] with slight modification was found to be excellent for the determination of thorium in aqueous solution The method consists of a direct titration with a standard solution of disodium dihydrogen ethylenediaminetetraacetate (Versenate) at pH 2 0 to 3 0 alizarin red S being used as indicator It was found that heating the solution to 60 C prior to titration gave an improved end point The method is applicable to the quantity range of 20 to 200 mg of thorium There is no interference from small amounts of uranyl ion or the following elements lithium sodium potassium magnesium calcium strontium barium lanthanum chromium manganese cobalt silver zirconium and cadmium

[10] J J Fr tz d J J Fo d T t metr c Determ nation of Tho um *Anal Chem* 25 1640 (1953)

Determination of Zirconium in Aqueous Solution with Disodium Dihydrogen Ethylenediaminetetraacetate

W J Wolkowitz

Since alizarin red S is employed in the colorimetric estimation of thorium it was thought that a method similar to the one for thorium described in the preceding section could be applied to the determination of zirconium When the procedure for thorium was used for zirconium it was found that the end point was indistinct and that heating the solution made it even more so The method finally devised was to add disodium dihydrogen ethylenediaminetetraacetate (Versenate) in excess and to back titrate the excess Versenate with 0 025 M standard thorium nitrate solution The end point is characterized by a yellow to red color change when alizarin red S is used as indicator The results check with those obtained gravimetrically by precipitation with ammonium hydroxide and ignition to ZrO_2

TABLE 3 RESULTS OF SEPARATE ANALYSES OF SHELF CHEMICALS

CHEMICAL	QUALITY	METAL DETERMINED (wt %)	
		Theo et cal	Recovered
$AlK(SO_4)_2\ 12H_2O$	Baker s Analyzed	5 69	5 67
$CdCl_2\ 2\frac{1}{2}H_2O$	Bake s Analy ed	49 22	57 20
Cd (sticks)	B & A Qual ty	100	99 32
$Z\ SO_4\ 7H_2O$	Man fa t ed by Fisher Scientif c Co	22 74	25 20
Zn (10 mesh)	Manufactu ed by J T Baker Chemical Co	100	100 3
$Pb(NO_3)_2$	B & A Q al ty	62 55	63 54
$NiCl_2\ 6H_2O$	Baker s Analyzed	24 69	26 26

Alum num determ ned

ANALYTICAL INSTRUMENTATION

D J Fisher H L Hemphill

Development of an Automatically Recording Internal Standard Flame Photometer

M T Kelley H L Hemphill
D J Fisher N D Lee

Previous developmental work on the automatically recording internal standard flame spectrophotometer has been described [11] The optical section has been developed further and other types of photomultipliers have been evaluated Transmission type and wedge-type interference filters behave similarly when used as internal standard monochromators The error caused by the introduction of known amounts of interfering substances into a solution being analyzed is essentially the same with either of these filters

Several type CV 148 infrared image converter tubes that were backed by a type 5819 photomultiplier tube were found to have good sensitivity in the spectral region of 768 mμ that is sensitivity comparable with that of a good type 6217 photomultiplier in the same region However at room temperature the dark current of the CV 148 converter is high relative to the signal current possibly because of emission from the electric field The fluctuations and drift of dark current are undesirable Beam chopping seems to be indicated as a way to separate the signal from the dark current but it has not been used because satisfactory sensitivity was obtained with type 6217 photomultipliers and a grating monochromator

A Bausch and Lomb catalog No 33 86-40-01 grating monochromator is being used as the sample monochromator A Mumetal shielded mount for a type 6217 or type 5819 photomultiplier is used with this grating monochromator It has been found in the ADP Control Laboratory that the photomultiplier output obtained with this monochromator is about 16 times that obtained with the use of the Beckman model B spectrophotometer as a monochromator Narrower slit widths may be used for greater spectral purity The grating monochromator gives improved sensitivity because of the smaller numerical aperture and it gives greater spectral purity in the red region because of the linear dispersion of the grating

[11] M T Kelley D J Fisher and N D Lee Development of an Automatically Recording Internal Standard Flame Photometer *Anal Chem Semiann Prog Rep Oct 20 1953* ORNL 1639 p 3

Compensating Coulometric Power Supply for Karl Fischer Water Titrator Automatic Cutoff Circuit

M T Kelley

Previous circuit development of a compensating coulometric power supply for Karl Fischer water titrations has been described [12] An anticipatory circuit has been designed and built It provides for automatic cutoff of the coulometric titration current and of the timing clock when the end point is reached Also it may be used to maintain the electrolyte in the titration cell at the end point conditions Further work is in progress on power supplies of regulated current capacities that are higher than 50 ma which is nearly the upper limit of the compensating coulometric power supply

Battery Operated Coulometric Power Supplies

M T Kelley R W Stelzner

Battery operated power supplies of 50 and 250 ma were developed for the coulometric determination of water by use of the Karl Fischer reagent These instruments have proved to be successful in routine analyses

Externally Triggered Flip Flop Timing Circuit for the Falling Drop Densimeter

M T Kelley D J Fisher R W Stelzner

An externally triggered flip flop circuit was developed for the timing operation in the falling drop densimeter described previously [13] A drop of liquid the density of which is to be determined is allowed to fall in an immiscible viscous medium and to interrupt light beams at two fixed points along the path of fall The changes in the intensities of the beams of light that fall on the two phototubes at these fixed points are fed as pulses to the grids of two type 2D21 thyratrons which are so

[12] M T Kelley Compensating Coulometric Power Supply for Karl Fischer Water Titrator *Anal Chem Semiann Prog Rep Oct 20 1953* ORNL 1639 p 4

[13] M T Kelley and N D Lee Electronically Timed Falling Drop Instrument for the Determination of Densities of Aqueous Solutions *Anal Chem Semiann Prog Rep Oct 20 1953* ORNL 1639 p 5

arranged that when one is fired it causes the other to become and remain extinguished

When the drop passes the first phototube thyratron No 1 is fired and closes a relay in its plate circuit This relay starts an electric timing clock When the drop passes the second phototube thyratron No 2 is fired and extinguishes thyratron No 1 thus stopping the timing clock The circuit is then ready for another cycle of operation The time of fall of the drop between the two phototubes as registered by the clock is related to the density of the liquid that forms the drop

A reset switch is placed in the plate circuit of the first thyratron to ensure that it will always be extinguished at the start of a cycle of operation

Conversion of Minneapolis Honeywell (Brown) Type 40X Amplifier to High Input Impedance

M T Kelley

The input section of a Minneapolis Honeywell Regulator Company Brown Instruments Division type 40X amplifier has been converted from transformer input to high impedance (2 5 megohm) input This conversion was made to eliminate the use of a model Q 1160 preamplifier chassis which requires extra space and in which a special top terminal chopper is used This converted Brown amplifier has greater gain than standard Brown amplifiers as well as having other features desirable for use with high impedance circuits The standard chopper is used The conversion requires that minor changes be made to the original 40X circuit The converted amplifier when substituted for the standard low impedance amplifier performs very well with a 1 mv Brown recorder

New Test Cell for Pick up Unit of TBP Varsol Meter

M T Kelley D J Fisher H L Hemphill

In the original test cell for the pick up unit of the TBP Varsol meter a capacitor of special design that consists of concentric cylinders is immersed in the test solution The capacitor is used to measure in effect the dielectric constant of the solution which is related to its chemical composition The new test cell has instead an inexpensive commercially available air dielectric capacitor which is immersed in the test solution Advantages of the new test cell are the gain in stability of the immersion capacitor that results from improved stability of plate spacing a greater ease of cleaning a decrease in the minimum sample volume required and a considerable saving in cost

Crystal Controlled High Frequency Instrument for Measurement of Conductance of High Conductance Solutions

M T Kelley E B Wagner

It was learned that the laboratory model oscillator (LMO)[14] is not sufficiently sensitive for the measurement of the conductance of concentrated (3 to 4 *M*) aqueous solutions of alkali and that improved frequency and amplitude regulation were required A new instrument of a different type has been constructed for this purpose (Fig 1)

[14] M T Kelley E B Wagner and D J Fisher Analytical Application of High Frequency Oscillators III Laboratory Model Oscillator *Anal Chem Semiann Prog Rep April 20 1953* ORNL 1547 p 3

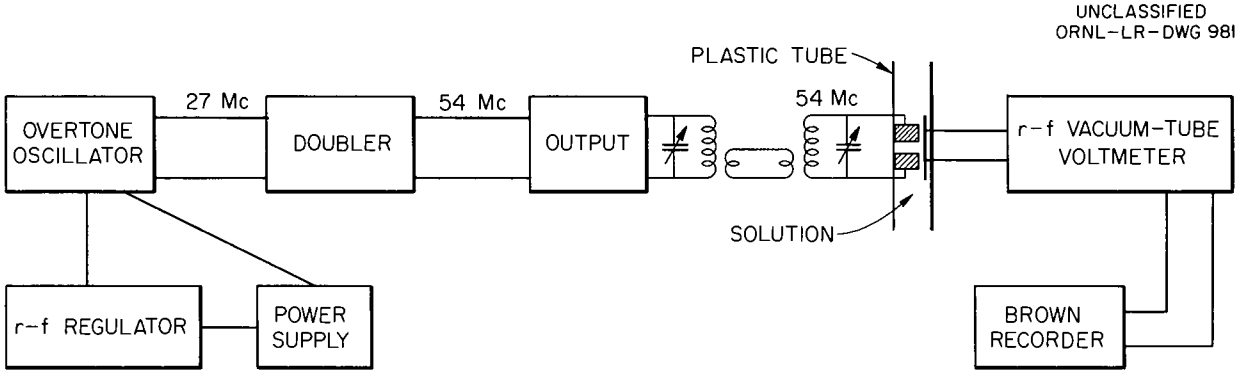

Fig 1 Block Diagram of Crystal Controlled High Frequency Oscillator for Measurement of High Conductance Solutions

Frequency stability of the new instrument is attained by crystal control An overtone crystal oscillator is used to drive a doubler stage which gives a frequency of 54 Mc An output stage is coupled to the doubler to act as a buffer and to increase the power The output stage is link coupled to a tuned parallel resonant secondary circuit The secondary circuit consists of a coil a trimmer condenser and a band condenser all connected in parallel The band condenser is positioned around a plastic tube that contains the solution to be measured An r f vacuum tube voltmeter with which a Brown recorder is used as an output indicator is connected to the secondary resonant circuit to measure the change in conductance as the concentration of the solution varies

The amplitude of the new oscillator is regulated by an r f regulator Changes in the r f amplitude at the grid of the oscillator are rectified filtered and amplified in order to control a series regulator tube which supplies the plate voltage to the oscillator The over all stability of the oscillator is increased tenfold by the addition of the r f regulator

The new type of instrument is not subject to some of the limitations that chacterize a grid dip type of oscillator The limitations include variation in modes of oscillation and cessation of oscillation as a result of loading of the oscillator by the solution

Radio Frequency Oscillator for the Determination of High Concentrations of Alkali in Aqueous Solutions

M T Kelley R W Stelzner

A parallel transmission line oscillator that employs a type 955 acorn triode operated at 235 Mc was developed for the determination of the concentration of strongly alkaline solutions Two parallel 8-in lengths of $\frac{1}{8}$ in copper tubing spaced $\frac{3}{4}$ in apart are connected to the plate and grid of the type 955 oscillator tube and a $\frac{3}{4}$ in plastic or glass tube is fixed permanently between the lines to serve as a cell for the liquid A cylinder of liquid is thus placed in the electric field between the two lines and this liquid loads the oscillator by coupling energy from it A portion of the grid voltage developed by the oscillator is filtered and is then fed through a zero set circuit to a 0 to 10 mv Brown recorder This partial grid voltage is related to concentration by an empirically constructed calibration curve

The concentration range of the instrument was extended upward and the stability was increased by a factor of two through the use of a type 6AG5 pentode as a constant current device to control the plate current of the oscillator The use of a 6 3 v Sola constant voltage transformer to supply the filament power for the vacuum tubes increased the short term stability When the instrument was operated at a sensitivity of approximately a 10-mv span for a 0 1 *M* change in concentration drifts of less than 0 2 mv in 30 hr runs were consistently observed

The operation of the parallel line oscillators appeared to depend more on a change in conductivity of the solution than on a change in dielectric constant An 80 fold change in dielectric constant of nonconducting fluids produced insignificant change in the response of the instrument The upper concentration limit is fixed by a compromise between sensitivity and stability of operation This upper limit of concentration corresponds to solutions with equivalent conductances of approximately 70 ohm^{-1} cm^2

Three different units gave almost identical calibration curves when oscillator responses were plotted against alkali concentration

A method in which two of the parallel line oscillators were used one serving as a standard was demonstrated to be feasible In this case the difference in grid voltages developed by the two oscillators is recorded as a function of alkali concentration This system exhibited excellent stability and sensitivity characteristics

The development and evaluation of the instrument are described completely in a topical report [15]

Shielded Cubicle for Use in Handling Radioactive Materials

M T Kelley J H Edgerton H L Hemphill

An acid fume hood was converted into a lead and concrete shielded cubicle for use in handling radioactive materials especially ANP and HRP type samples Hi D glass windows available from Penberthy Instrument Company Inc permit viewing of the operation of the apparatus within the cubicle Figure 2 is a cutaway diagram of the shielded cubicle Apparatus for sampling and analysis consists of a dissolution apparatus a servo controlled

[15] M T Kelley and R W Stel ner *Radio Frequency Oscillator for the Determination of High Concentrations of Alkali in Aqueous Solutions* (in p ess)

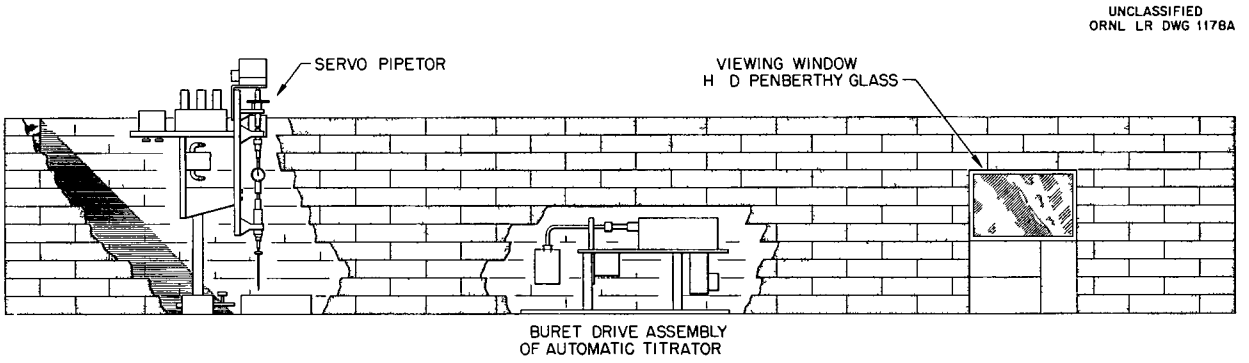

Fig 2 Cutaway Diagram of Shielded Cubicle

pipetor [16] and an automatic titrator that is described in the next section of this report

Automatic Titrator with Velocity Servo Control of Titrant Addition

M T Kelley N D Lee
D J Fisher H L Hemphill
R W Stelzner

An automatic titrator (see Fig 3) in which a velocity servo system is used to control the velocity of titrant addition has been reported [17] This instrument is being used to determine total uranium and total sulfate in ANP and HRP type samples

Aliquots that contained 0 500 to 1 000 mg of uranium have been analyzed by the General Analyses Group with a relative standard error of ±0 95% at the 95% probability level

The General Analyses Group has also analyzed aliquots that contained 0 500 to 1 000 mg of SO_4^{--} with a relative standard error of ±0 60% at the 95% probability level

RADIOCHEMICAL ANALYSES

S A Reynolds

Nuclear Properties

W S Lyon

The nuclear properties of Co^{56} Cs^{132} Au^{193} Au^{194} Au^{195} and Y^{91} are currently under study Results of these investigations which have employed gamma ray spectrometry x ray spectrometry and beta ray measurements will be reported in the open literature

Instrumental Methods

Analysis of Thorex Solutions by Gamma Spectrometry (H W Wright) The gamma ray spectrometer has been shown to be applicable to the analysis of certain radionuclide mixtures [18 19] An endeavor is being made to apply this instrument with minimum prior chemical treatment of the sample to the routine analysis of samples from the various Thorex process streams Difficulties encountered in instrument calibration have precluded the collection of pertinent data Minor modifications and a new power source appear to have stabilized the instrument

Gamma Monitor for Thorex Streams (H W Wright) A study of possible constant gamma monitors for the Thorex streams that would be reliable and of low cost was undertaken and the resulting recommendations have been made [20] The Instrumentation and Controls Division is now fabricating the electronic components of the system and delivery has been promised in the near future Specifications with respect to location shielding housing etc have been deferred to a later period in the construction of the Thorex pilot plant

[16] M T Kelley H L Hemph ll and A L E n Servo Cont olled Pipetor for Use n Dete mining the Dens ty of Aqueous Solutions by the Fall ng Drop Method *Anal Chem Sem ann P og Rep Ap l 20 1953* ORNL 1547 p 2

[17] M T Kelley N D Lee and H L Hemphill Automatic Titrato with Velocity Servo Control of Titrant Add tion *Anal Chem Semiann Prog Rep Oct 20 1953* ORNL 1639 p 6

[18] M B Leboeuf and R E Conn lly *A Method for the Analysis of Radionuclide Mixtures Using a Gamma Beta Scintillation Spectrometer* HW 27090 (Feb 27 1953)

[19] C E C outhamel and C E Johnson *Application of the Sc ntillation Spectrometer to Fission Product Ana lys s* ANL 4924 (Nov 1952)

[20] Memorand m f om H W W ght to W E M lle J n 15 1954

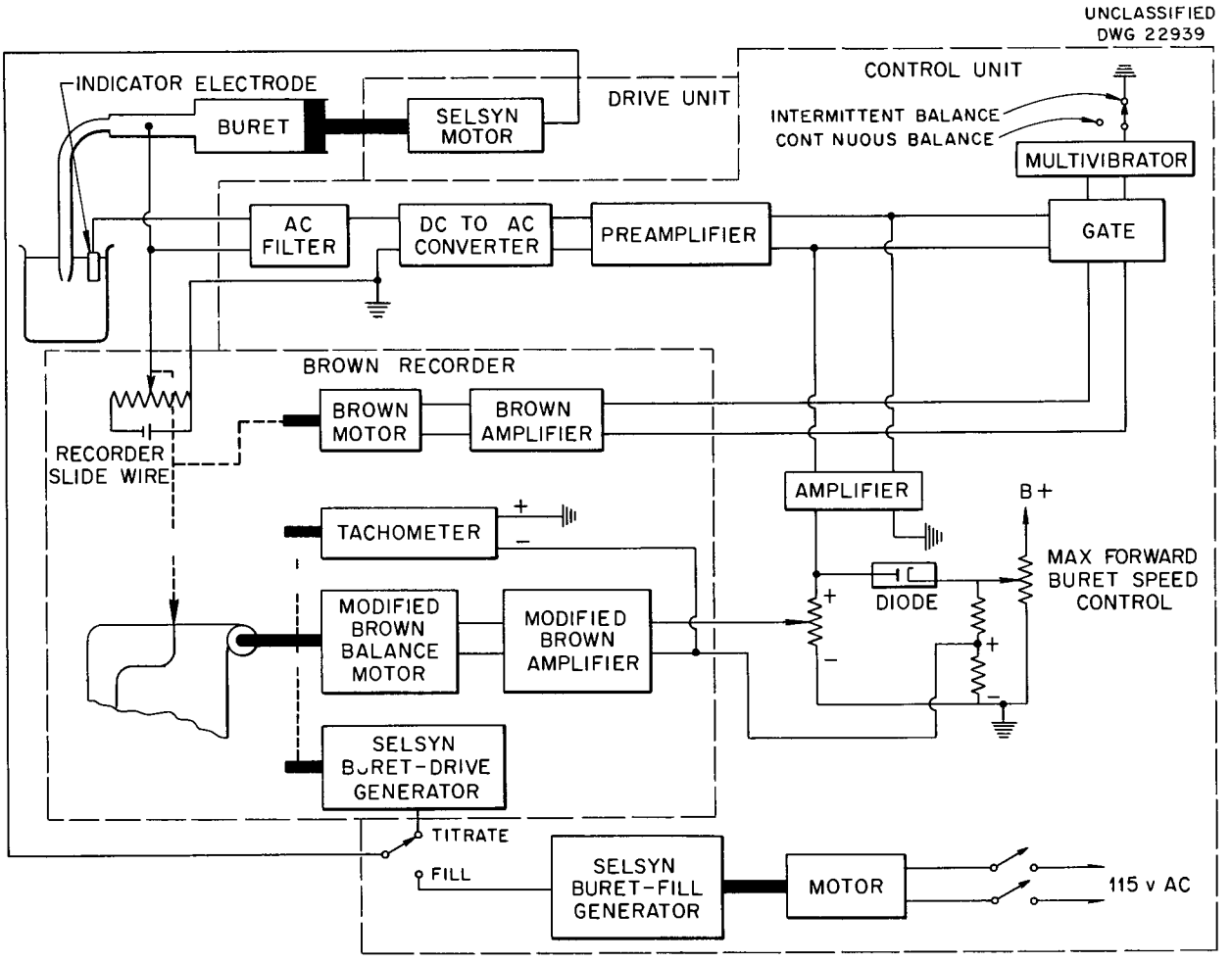

Fig 3 Functional Block Diagram of Velocity Servo Controlled Buret Drive for Automatic Titrator

Mass Analysis of Uranium (S A Reynolds H A Mahlman[21] G W Leddicotte[21]) Methods are being developed for rapid and inexpensive mass analysis of uranium by scintillation spectrometry The basis for the analysis is the chacteristic 0 18-Mev gamma[22] of U^{235} One sample has been analyzed and was found to be natural uranium Details will be given in a forthcoming topical report

General Applications (S A Reynolds W S Lyon) A number of qualitative and quantitative identifications of unknown activities have been made for various groups within the Laboratory Several samples of fission product gases that were contained in quartz tubes have been analyzed without the tubes being opened Decay studies and gamma spectrometry served to identify the major components of the gases and to furnish quantitative measurements of their respective activities

Fission products principally cerium iodine ruthenium zirconium and niobium have been determined in samples of various types including solutions insoluble residues and stainless steel plates

Analysis of Radioisotopes

Gamma Emitting Impurities in Products (W S Lyon) The identification of gamma emitting impurities in radioisotope products has continued Of interest has been the identification of Cs^{132} in Ba^{133} products and of Cs^{134} in both Cs^{137} products and in samples of Rb^{86}

[21] Activation Analyses Group

[22] J M Hollander I Perlman and G T Seaborg Table of Isotopes *Revs Mod Phys* 25 469 (1953) esp p 605

Radioisotope Assay Comparisons (W S Lyon) Standard samples of P^{32} I^{131} and Au^{198} have been received from the NBS for intercomparison of assay values Agreement between ORNL and NBS assay values has been within the limits of error set by the NBS that is ±3%

Fission Products

Determination of Rhodium (G W Smith) A method was sought for the determination of rhodium activity in Homogeneous Reactor fission products that would give adequate yields and satisfactory decontamination of the rhodium from other fission products especially tellurium iodine and ruthenium After a two day cooling of the Homogeneous Reactor solution the rhodium was calculated[23] to contribute 4% of the gross beta activity of the solution

The method of Seiler[24] in which the somewhat soluble potassium rhodium nitrite is precipitated gave extremely low yields and so was abandoned The method of Ballou[25] gave adequate though erratic yields satisfactory decontamination factors ($\sim 10^4$) resulted for tellurium ruthenium and mixed fission products However the rhodium activity (36-d Rh^{105}) from slow neutron irradiated uranium solution that was used to simulate Homogeneous Reactor solution was found to be only about 0 2% of the gross beta activity of the irradiated uranium after two days As a result the rhodium activity was contaminated with about 4% of fission product activities after two days and about 8% after six days giving a rhodium mount of low radiochemical purity Because an additional pyridine extraction and another $HClO_4$ volatilization step failed to improve the decontamination further work was discontinued A method of fair accuracy is available should there be sufficient interest in the determination of the small amount of rhodium activity present in Homogeneous Reactor fission products

[23] F J Keneshea J nd A M Saul *Contribution by Chemical Element to the Total Beta Activity of Fission Products* NAA SR 187 (June 13 1952)

[24] J A Seile Determination of Rhod um Act vity n F ss on (I) P per 262 p 1561 in *Radiochemical Studies The Fission Products* Book 3 Pa t VI NNES IV 9 ed by C D Coryell and N Sug man McGraw H ll New Yo k 1951

[25] N E Ballou Determ nation of Rhodi m Act vity in F ssion (II) Paper 263 p 1563 *Radiochemical Studies The Fission Products* Book 3 Part VI NNES IV 9 ed by C D Coryell nd N Suga m n McGraw H ll New Yo k 1951

Heavy Elements

Protactinium (F L Moore S A Reynolds) An improved method for the determination of protactinium in Thorex type solutions has been developed The method is based on the extraction of protactinium from an aqueous phase of 6 M HCl–4% $(COOH)_2$ into diisobutylcarbinol Details will be presented in a forthcoming topical report

Determination of Americium (G W Smith) A method was developed for the determination of americium (Am^{241}) in the aqueous solution (after plutonium extraction) obtained from the dissolving of Hanford metallurgical slag and crucibles [26] The only activities in the solution are the alpha emitting plutonium americium and possibly curium with their associated low level gamma and x rays however rather high concentrations of calcium magnesium aluminum and fluoride are present Consideration of several methods showed that a modification of the TTA extraction procedure of Chetham Strode[27] was most suitable Method No 2 31030 Americium 241 was drafted for the *ORNL Master Analytical Manual* for particular use in the analysis of samples from the americium isolation (Amex) process The plutonium in the solution is made quadrivalent the pH of the plutonium solution is adjusted to about 4 1 and the plutonium and americium are extracted into TTA xylene Following the back extraction of the americium into 0 5 M HNO_3 an aliquot of the HNO_3 solution is evaporated on a metal plate then the americium is measured by counting on a proportional alpha counter and its purity checked by pulse analysis

Reactor Analyses

W S Lyon S A Reynolds

Flux determinations for the HRP have been made by assaying HRE solutions for Ce^{141} content a radiochemical cerium analysis and gamma ray spectrometry were used to indicate Ce^{141} content

Two samples of uranium that had been exposed in the MTR were analyzed for Cs^{137} and uranium

[26] R L Folger E B Sheldon and S V Castner *Recove y of Plutonium from Metallurgical Wastes* ORNL 1442 (May 6 1953)

[27] A Chetham Strode Jr A Method for the Dete minat on of Americi m *Analytical Research Sub-un t Quarterly Progress Report for October November and Decembe 1952* HW 27139 p 58

burn up was calculated by the method of Turk [28] In addition two GE ANP fuel element samples have been dissolved After the solutions have been analyzed for uranium and Cs^{137} burn up calculations will be made The GE program will continue for some time

Cyclotron Research

General Research (T H Handley) Assistance has been given to the Electronuclear Research Division in the performance of the radiochemical phases of numerous physics research problems such as yield distribution in proton fission of natural uranium and uranium enriched in U^{235} (*p pn*) and (*p α*) excitation functions [29] experimental search for a stable dineutron [30] experimental studies of (*p t*) reactions [31] cross sections for (*p 2p*) reactions [32] and cross sections and excitation functions for many other nuclear reactions

A new radionuclide of manganese has been found and its properties have been studied [33] A paper on new isotope identification[34] and another on cross sections and excitation functions[32] are to be presented at the Washington Meeting of the American Physical Society April 29–May 1 1954

Rare Earth Radionuclides (T H Handley) Progress has been made in the study of unreported radionuclides of the rare earths [35] These radionuclides are produced by proton bombardment of carefully purified oxides of the rare earths Separations are then performed by ion exchange methods similar to those developed by Ketelle and Boyd [36] These studies of the rare earths are summarized in Table 4 A study of the neutron deficient activities of terbium by use of enriched stable isotopes of gadolinium is also in progress A study of the

[28] D Fredr ckson R LaPorte M Homa E Reilly E H Turk and R C Vogel Determination of Burn Up by Fission *Argonne National Laboratory Summary Report of the Chemical Engineering Division for July August and September 1952* ANL 4922 p 45 see also W A Brooksbank ANP Analyses *Anal Chem Semiann Prog Rep April 20 1953* ORNL 1547 p 7

[29] B L Cohen E Newman R A Charp e and T H Handley (*p pn*) and (*p αn*) Exc tation Functions ac cepted for publication n the M y 1 1954 ssue of *The Physical Review*

[30] B L Cohen and T H Handley Exper mental Search for a Stable Dineutron *Phys Rev* 92 101 (1953)

[31] B L Cohen and T H Handley Experimental Studies of (*p t*) Re t ons *Phys Rev* 93 514 (1954)

[32] B L Cohen G H McCorm ck T H Handley and E Newman (p 2n) (p 2p) (p t) (p *He*^{3}) *and* (p f) *Cross Sections and Excitation Functions* to be presented at the Wash ngton Meeting of the Ame ican Physical Society April 1954

[33] B L Cohen R A Charpie T H Handley and E L Olson Manganese 57 accepted for publicat on in the May 15 1954 ssue of *The Physical Review*

[34] T H Handley and B L Cohen *New Isotope Identi fication Program on the Oak R dge 86 Inch Cyclotron* to be presented at the Washington Meeting of the American Physical Society Apr l 1954

[35] T H Handley Cyclot on Resear h *Anal Chem Semiann. Prog Rep Oct 20 1953* ORNL 1639 p 8

[36] B H Ketelle and G E Boyd The Exchange Ad so ption of Ions f om Aqueous Solutions by Organic Zeolites IV The Separation of the Yttrium Group Rare Ea ths *J Am Chem Soc* 69 2800 (1947)

TABLE 4 PROPERTIES OF NEW RARE EARTH RADIONUCLIDES

RADIO NUCLIDES	HALF LIFE	RADIATION	METHOD OF PRODUCTION	METHOD OF IDENTIFICATION
Pr^{135}	22 m	X ray β^+ and 0 080 0 22 and 0 30 Mev gamma rays	Enriched $Ce^{136}(p\ 2n)P^{135}$	Pa ent of Ce^{135} Excitat on
Pr^{136}	70 m	X ray β^+ and 0 17 Mev gamma rays	Enr ched $Ce^{136}(p\ n)Pr^{136}$	Excitat on
Pr^{137}	1 3 h	β^+	Enriched $Ce^{138}(p\ 2n)Pr^{137}$	
$Pr^{?}$	13 m	β^+	Proton bombardment of Ce isotopes	
Ho^{167}	3 0 h	1 0 ± 0 1 Mev β^- and 0 35-Mev gamma rays	$Er^{(170)}(p\ \alpha)Ho^{167}$ $Er^{167}(n\ p)Ho^{167}$	Excitation

T H Handley and E L Olson Holmium 167 submitted to *The Physical Review* for publication

neutron deficient activities of holmium has been completed [37]

Cross Sections for (p α) (p αn) (p 2p) and (p He³) Reactions (D J Coombe) The cross sections for (p α) (p αn) (p 2p) and (p He³) reac tions are being determined The results will be published in a paper by B L Cohen of the Electro nuclear Research Division and by D J Coombe

Angular Distributions of Fragments from Uranium and Thorium Fission (D J Coombe) The determi nation of bromine activity is required in the study of the angular distribution of fragments from fission in uranium and thorium induced by 22 Mev protons For these fission fragment studies a radiochemical procedure for the bromine determination was adapted from the Berkeley fission product man ual [38 39 40] B L Cohen of the Electronuclear Research Division has submitted to *The Physical Review* a paper describing the results of these studies

Ion Exchange and Chromatography

Separation of Tin Antimony and Tellurium by Anion Exchange (G W Smith) Trace amounts of antimony tin and tellurium have been separated by anion exchange[41] from 0 1 M oxalic acid solution on Dowex 1 resin The K_d values[42] were deter mined for Sb^{124}(V) Sn^{113}(IV) and Te^{125}(IV) in 0 1 M oxalate solution [43 44] the pH of which was varied by the addition of ammonia on Dowex 1 and Dowex 50 as well as in 0 1 M oxalic acid on Dowex 1 No adsorption on Dowex 50 was observed for these elements however K_d values of 42 5600 and 0 were observed for Sb^{124}(V) Sn^{113}(IV) and Te^{125}(IV) in 0 1 M oxalic acid respectively on Dowex 1 The same isotopes were used to indicate the distribution on and rate of elution from 10 and 30 cm length columns of Dowex 1 Tellurium was eluted immediately and antimony after about 7 to 24 hr tin which remained at the top of the column was eluted separately with 1 M H_2SO_4 [45] Antimony was found to elute only in the quinquevalent state

The scheme of Hicks *et al* [46] in which Dowex 2 is used was found to be unsatisfactory Also separations with Dowex 1 from chloride media seemed to be improbable [47] This study will be described in more detail in a paper to be published in the open literature

Activity Analyses by Electrodeposition

Copper (D J Coombe S A Reynolds) The controlled cathode modification[48 49] of the electro deposition method for the determination of copper is being evaluated for the determination of radio active copper The electrodeposition is made at −0 25 to −0 35 v vs the S C E on a spiral plati num wire cathode from the test solution to which known amounts of inactive copper have been added The radioactive copper on the cathode is deter mined by counting in a gamma scintillation counter The method appears to be promising and will be further investigated for the determination of copper as well as other radiometals

---

[37] T H Handley Neut on Def c ent A t v ties of Holm m accepted for publ cation in the May 15 1954 ssue of *The Physical Review*

[38] R H Goecke mann Chem al Separat ons – B o m ne 35 1 in *Chemical P ocedures Used in Bombard ment Wo k at Berkeley* (ed by W W Meinke) UCRL 432 (Aug 30 1949)

[39] M Linder Chemical Separations – Bromine 35 2 in *Chemical Procedu es Used in Bomba dment Wo k at Berkeley* (ed by W W Me nke) UCRL 432 (Aug 30 1949)

[40] A S Newto Chem c l Sepa t on – B om e 35-3 n *Chem cal P ocedu es Used n Bombardment Work at Be keley* (ed by W W Me nke) UCRL 432 (Aug 30 1949)

[41] G W Sm th Ion Ex h nge Sep r t ons Organ nd Inorg n Complex g Age ts *Anal Chem Sem ann Prog Rep Oct 20 1953* ORNL 1639 p 9

[42]

$$K_d = \frac{\dfrac{\text{act vity of element}}{\text{grams of dry resin}}}{\dfrac{\text{activity of element}}{\text{m lliliters of solut on}}}$$

[43] P Ka sten nd H L Kies Separation of Tin(IV) and Antimony Acco d ng to F W Clarke l Bas s of the Method *Rec trav chim* 67 753 (1948) (n Engl sh) C A 43 7371h (1949)

[44] R K M Alp e nd B A Soule *Qualitat ve Chemi cal Analys s* pp 215 225 227 Van Nostrand New Yo k 1953

[45] At the suggestion of F Nelson Chemist y Divis on

[46] H G H ck R S G lbe t P C Stevenson and W H Hutchin *The Qualitative Anionic Behavior of a Number of Metals with Ion Exchange Resin (Dowex 2)* LRL 65 (Dec 1953)

[47] Private communication of F Nelson Chemistry Divis on to G W Smith Aug 27 1953

[48] H H W lla d L L Me ritt and J A Dean *In strumental Methods of Analysis* 2d ed p 257 Van Nostrand New York 1951

[49] H Diehl *Electrochemical Analysis with Graded Cathode Potential Control* G F Smith Chemical Co Col mbus Ohio 1948

ACTIVATION ANALYSES

G W Leddicotte

Neutron Activation Analysis Methods

Determination of Microgram and Submicrogram Amounts of Uranium (H A Mahlman G W Leddicotte) A modification to the method described previously[50] for the determination of microgram and submicrogram amounts of uranium on filter paper is being evaluated After the sample is irradiated in the reactor the carrier element (La^{+++}) is added to the irradiated sample that is contained in a porcelain crucible Following ignition in a muffle furnace the carrier and the induced radioactivities are washed from the crucible into a centrifuge tube The solution is then analyzed for Np^{239} ($t_{1/2}$ = 2 33 d) the product of the nuclear reaction

$$U^{238}(n\ \gamma)U^{239} \xrightarrow[23\ 4\ m]{\beta^-} Np^{239}$$

by the chemical procedure described earlier [50] The modified method is indicated to have an over all relative standard deviation of 5% Work on this determination is being continued

Neutron activation analysis has also been applied to the assay of Chattanooga shale for microgram quantities of uranium The results obtained by the chemical procedure described previously[50] were about 20 to 30% higher than results obtained by the fluorophotometric method The separated carrier and the Np^{239} radioactivity were critically examined for radioactive contaminants by gamma ray spectrometry and radioactivity decay measurements The gamma spectrum analysis showed that there was less than 1% of radioactive contamination in the separated Np^{239} the decay studies showed that the separated Np^{239} was decaying with a half life of 2 30 d which is in favorable agreement with the 2 33 d half life usually assigned to Np^{239}

Determination of Submicrogram Amounts of 2 4 Dichlorophenoxyacetic Acid (H A Mahlman G W Leddicotte) The method of activation analysis in which the reaction $Cl^{37}(n\ \gamma)Cl^{38}$($t_{1/2}$ = 38 5 m) is employed was evaluated for the determination of submicrogram quantities of 2 4 dichlorophenoxyacetic acid deposited on filter paper The samples were irradiated in small quartz tubes for 1 25 hr and then processed by an isotopic carrier chemical separation procedure to remove contaminating radioactivities The final precipitate (as AgCl) of the isotopic carrier and Cl^{38} was counted in a gamma scintillation counter and the Cl^{38} radiations were characterized to confirm the purity of the separated Cl^{38} Filter paper blanks showed large amounts of chlorine The blank correction exceeded the quantity of chlorine sought therefore it was assumed that the filter paper contained chlorine unevenly distributed that interfered with these analyses It has been recommended that solutions of the 2 4 dichlorophenoxyacetic acid rather than deposits of it on filter paper be submitted for analysis

Determination of Iodine in Blood Serum (H A Mahlman) The possibility of using the reaction $I^{127}(n\ \gamma)I^{128}$ ($t_{1/2}$ = 25 m) in the neutron activation determination of a few micrograms of organic iodine in blood serum samples was investigated Two direct methods were considered for measuring the induced I^{128} without separating it from the irradiated sample they were the use of both a proportional beta counter and a gamma scintillation counter and the use of a scintillation spectrometer The presence of chlorine in the serum resulted in the formation of Cl^{38} by the reaction $Cl^{37}(n\ \gamma)Cl^{38}$ which caused interference when the first method was used Gamma scintillation spectrometry was not satisfactory even though sufficient difference exists between the energies of the gamma rays associated with I^{128} and Cl^{38} because the total gamma activity contributed by the I^{128} was only approximately 1000 counts/min which is too small a count for good quantitative work In a chemical separation of the I^{128} from the irradiated sample, an extraction of I^{128} and isotopic carrier into carbon tetrachloride was attempted Problems of immiscibility and interdispersion of the serum were encountered in the extraction technique The use of electrophoresis to isolate the organic iodine from inorganic iodine another interference followed by neutron activation and gamma scintillation counting is now being considered

Estimation of Microgram and Submicrogram Amounts of Gold in Crude Oils and Petroleum Distillates (J E Strain) The nuclear reaction $Au^{197}(n\ \gamma)Au^{198}$ ($t_{1/2}$ = 2 70 d) was used to determine gold that had been added to crude oils and petroleum distillates The irradiated samples were

[50] H A Mahlman and G W Leddicotte *The Determination of Trace Amounts of Uranium by Neutron Activation Analysis* ORNL 1590 (Aug 24 1953)

processed by a chemical separation procedure adapted from a method described elsewhere [51] The sample and a comparative standard of gold were irradiated and processed in the same manner The isotopic carrier and the radioactive gold were extracted as $AuCl_3$ from a 4 *N* HCl solution into an equal volume of ethyl acetate The gold was finally precipitated by Na_2SO_3 as gold metal The gamma radiations from the Au^{198} in the precipitate were measured on a gamma scintillation counter Purity of the gamma radiation with respect to Au^{198} was confirmed by decay measurements By this method it was possible to estimate gold in crude oil or petroleum distillates in concentrations as low as 0 0001 $\mu g/g$

Estimation of Microgram and Submicrogram Amounts of Thorium in Soils (H A Mahlman) The nuclear reaction

$$Th^{232}(n\ \gamma)Th^{233} \xrightarrow[23\ 3\ m]{\beta^-} Pa^{233}\ (t_{1/2} = 27\ 4\ d)$$

was used to estimate microgram and submicrogram amounts of thorium in river mud The samples and a comparative thorium standard were irradiated for 4 0 hr in the ORNL Graphite Reactor dissolved in an acid mixture and processed by a chemical separation procedure adapted from a method to be described in a forthcoming topical report by Moore and Reynolds [52] After the Pa^{233} was separated the gamma radiations from it were counted and the decay of these radiations was followed and characterized by a gamma spectrum study In all instances only Pa^{233} radioactivity was detected By this method it has been possible to estimate thorium in soils in concentrations as low as 30 to 35 $\mu g/g$ Since the data obtained in this study were calculated from counting rates of about 10^5 gamma counts/min this method could possibly be extended to the assay of soil samples of thorium concentration as small as 0 03 $\mu g/g$

Estimations of Microgram Amounts of Sodium in Aluminum and Magnesium (H A Mahlman G W Leddicotte) The estimations of microgram amounts of sodium in aluminum and magnesium by the slow neutron reaction $Na^{23}(n\ \gamma)Na^{24}$ ($t_{1/2}$ = 15 0 h) are interfered with by the fast neutron reactions $Al^{27}(n\ \alpha)Na^{24}$ and $Mg^{24}(n\ p)Na^{24}$ respectively Both slow and fast neutrons are produced in the pneumatic tubes and in the vertical hole No 12 the positions of the ORNL Graphite Reactor most frequently used in activation analysis The periphery positions of the reactor such as that of stringer Z are far removed from a fast neutron flux By the use of these positions it has been possible to estimate sodium in aluminum and in magnesium in concentrations as small as 10^{-6} g/g The method and pertinent analytical data will be described fully in a forthcoming topical report

Determination of Microgram Amounts of Cobalt in Nickel (H A Mahlman) The determination of microgram amounts of cobalt in nickel by the use of the slow neutron reaction $Co^{59}(n\ \gamma)Co^{60}$ ($t_{1/2}$ = 5 3 y) is interfered with by the fast neutron reactions $Ni^{60}(n\ p)Co^{60}$ and $Ni^{58}(n\ p)Co^{58}$ ($t_{1/2}$ = 72 d) The deduction that the periphery reactor positions which have nearly 100% thermal fluxes will eliminate the above mentioned interferences was demonstrated experimentally

Determination of Isotopic Ratios of Copper (H A Mahlman G W Leddicotte) The nuclear reaction $Cu^{63}(n\ \gamma)Cu^{64}$ ($t_{1/2}$ = 12 8 h) was applied to the determination of the isotopic ratio of copper in metallic copper and copper alloys The irradiated samples were processed by a chemical separation method and the separated Cu^{64} gamma radiations were characterized by a decay study It was possible to show differences of ±0 2 in isotopic ratios by this method

Use of Fast Neutron Reactions for Analysis (H A Mahlman J E Strain G W Leddicotte) The investigation of methods for the determination of microgram amounts of aluminum and magnesium by measurement of the Na^{24} ($t_{1/2}$ = 15 0 h) produced by the fast neutron reactions $Al^{27}(n\ \alpha)Na^{24}$ and $Mg^{24}(n\ p)Na^{24}$ is being continued [53] In addition fast neutron reaction methods are being investigated for the determination of microgram amounts of niobium titanium and fluorine

Use of Radioactivation Analysis as a Qualitative or Semiquantitative Analytical Method (H A Mahlman G W Leddicotte) Progress is being

[51] G W Ik son nd H H ks Chemi I Sep on – Gold 79 1 n *Chemical P ocedures Used n Bombard ment Work at Berkeley* (ed by W W Me nke) UCRL 432 (A g 30 1949)

[52] F L Moore a d S A Reynolds R dio hem cal A aly es G o p

[53] H A Mahlman and G W Leddicotte Use of Fast Ne t on Reactions n Activat on Analys s *Anal Chem Sem ann P og Rep Oct 20 1953* ORNL 1639 p 12

made on the development of an analytical scheme[54] that will divide most of the elements that are considered feasible for use in activation analysis into groups for identification The qualitative analysis scheme of Handley[55] is the basic method of chemical separation Since the radioelements to be found in the acid group (AgCl precipitate) in the alkaline earth group (SrC_2O_4 precipitate) and in the soluble group (Na^+ as carrier) can be identified by their half lives and radiation characteristics no further separations within these groups are required Investigations based upon the ion exchange separation proposed by Hicks *et al* [56] are being made Thus far this separation has been applied to the determination of elements that appeared in the acid sulfide group (CuS precipitate) and in the basic sulfide group (CoS precipitate) which had been obtained in the qualitative analysis of synthetic materials These studies have shown that in most instances it is possible to obtain separations for identifying the radioelements involved The studies have been extended to include investigations of isotopic and of nonisotopic carrying on carriers other than those proposed by Handley [55] Still to be considered is the ammonium hydroxide group [$Fe(OH)_3$ precipitate] This method has been applied to the analysis of spectrographically pure metals and alloys

Use of Autoradiography in Activation Analysis (G W Leddicotte W A Brooksbank T E Willmarth [57] H A Mahlman) In an earlier report[58] brief mention was made of an investigation of the use of neutron activation–autoradiography techniques in such problems as the location of inclusions in metals and the migration of elements from surface agents into the matrix of the sample These techniques have been applied to metals that have potential use as materials of construction in nuclear reactors Some of the results have been reported [59] It was possible to examine large areas of these metals for metallic inclusions that had high activation cross sections for the production of radioactivity Identifications of some of the elements in these areas were made by gamma scintillation spectrometry and by the qualitative separations described in the preceding section It is believed that the neutron activation–autoradiography technique can be useful in indicating the quality and composition of materials to be used in nuclear reactors

Determination of Contaminant Elements in Hafnium in Zirconium and in Their Alloys (J E Strain G W Leddicotte) Neutron activation analysis is now being applied to the determination of microgram and submicrogram amounts of aluminum calcium chromium copper iron molybdenum nickel silicon sodium tungsten and zinc in hafnium and in zirconium metals and in their alloys Trace amounts of hafnium in zirconium and of zirconium in hafnium were also determined Some study on the use of proper chemical separation procedures has been required the results of these investigations will be reported later

Separation of Zinc from Cobalt by Liquid Liquid Extraction (H A Mahlman G W Leddicotte F L Moore) A liquid liquid extraction method that employs a trichloroethylene solution of di *n* octyl methylamine as extractant has been developed for the quantitative separation of zinc from cobalt and from most of the elements of the first transition series The extractability from HCl solution of all the elements investigated was measured by the use of radionuclides Tribenzylamine was also evaluated as an extractant A report of the work is now being considered for publication in the open literature

New Applications of Activation Analysis (G W Leddicotte) Inquiries have been received regarding the suitability of the method of activation analysis for the determination of trace quantities of the following elements in the materials indicated cobalt alkaline earths and alkali metals in aluminum bromine in sea and river water vanadium in bunker oil contaminant elements in graphite barium and iodine in crude oils and petroleum distillates and tantalum in ores

---

[54] H A Mahlman and G W Leddicotte Use of Radioactivation Analysis as Qualitative or Semiquantitative Analytical Method *Anal Chem Semiann Prog Rep Oct 20 1953* ORNL 1639 p 13

[55] T H Handley Qualitative Analysis Scheme *Anal Chem Quar Prog Rep Jan 10 1951* ORNL 955 p 47

[56] H G Hicks R S Gilbert P C Stevenson and W H Hutchin *The Qualitative Anionic Behavior of a Number of Metals with an Ion Exchange Resin (Dowex 2)* LRL 65 (Dec 1953)

[57] Optical and Electron Microscopy Group

[58] G W Leddicotte T C Rains and T E Willmarth Use of Autoradiography in Activation Analysis *Anal Chem Semiann Prog Rep Oct 20 1953* ORNL 1639 p 13

[59] T E Willmarth *A Study of the Surface and Microstructure of the Titanium Used in Out of Pile Test Bomb H 15* ORNL CF 54 3 82 (March 17 1954)

Isotopic Tracer Methods

Determination of Iron and Zirconium in Uranium Alloys by Isotope Dilution (H A Mahlman G W Leddicotte) Iron and zirconium in uranium alloys were determined quantitatively by the technique of isotope dilution [60] A known amount of a radio isotope of the element to be determined was added to a solution of the alloy A compound of the element was isolated from the solution its recovery and activity were measured and the activity was compared with that of the added radioactivity The extent of dilution of the radio isotope showed the amount of inactive element present in the original unknown In these determinations Fe^{59} ($t_{1/2}$ = 46 d) and Zr^{95} ($t_{1/2}$ = 65 d) tracers were used Concentrations of iron and zirconium in these alloys as low as 1 0% were estimated

Nuclear Particle Attentuation Methods

Neutron Density Method for Rapid Determination of Certain Elements (W A Brooksbank J E Strain G W Leddicotte) A method for the rapid determination of certain elements has been developed that is based upon a measurement of the fluctuations in the density (neutrons/cm^3) of slow neutrons at a definite position in a specific field of neutrons Since every nuclide interacts differently in absorbing slow neutrons it has been possible to use these differences in absorption and their effects on neutron density in analyzing water and solutions of nitric acid ammonium iodide boric acid lithium chloride lithium hydroxide silver nitrate mercurous nitrate and cadmium nitrate

The method uses the fast neutrons that are emitted by a low intensity neutron source of the polonium boron type and that have been slowed down to thermal energies by collisions with the hydrogen atoms of a paraffin block which surrounds the neutron source When a sample that contains a neutron absorbing element(s) is placed in this field of neutrons those neutrons that are not absorbed can be detected by a neutron counter The neutron counter is a proportional type of counter that is filled with $B^{10}F_3$ gas The neutrons that have not been absorbed by the element being determined are absorbed by the B^{10} of the $B^{10}F_3$ to give off alpha pulses These secondary effects indicate the neutrons that remain in the field and hence become a measure of the concentration of the element Samples that contain known amounts of the element being determined are used as reference standards The principles described by Halliday[61] have been used in developing this method A topical report on this work is being prepared

Determination of Isotopic Composition of Boron by Neutron Density Measurements (W A Brooksbank G W Leddicotte) Several samples of solutions that contained the B^{10} and B^{11} isotopes of boron in various ratios were analyzed by the neutron density method described in the preceding section A topical report on these analyses will be made soon

Determination of Boron in Stainless Steel by Means of Secondary Neutron Reactions and Nuclear Track Emulsions (W A Brooksbank G W Leddicotte) In a method of determining boron in stainless steel now being investigated the sample and a nuclear emulsion are exposed to a source of slow neutrons The alpha particles emitted in the interaction of the neutrons with the boron atoms in the sample are recorded on the nuclear emulsion After the neutron exposure the emulsion is processed and becomes a record of the number of alpha particles emitted The density of the ionizing alpha particles can then be used to determine the distribution or amount of boron in the sample Samples of various boron concentrations are being used in this investigation

SPECTROCHEMICAL ANALYSES

C Feldman

Temperatures in Porous Cup Discharges

C Feldman M K Wittels

Temperature Distribution Across the Analytical Gap Temperature distributions within porous cup discharges have been studied for a number of solutions by use of the temperature measurement technique mentioned previously [62] An enlarged image of the discharge was projected on a diaphragm

[60] A C Wahl and N A Bo ner *Rad oact vity Applied to Chemistry* p 94 7 W ley New York 1951

[61] D H Il day *Int oductory Nuclea Physics* p 225-8 W ley New York 1950

[62] C Feldman *et al* Spectrochemical Analyses *Anal Chem Semiann Prog Rep Oct 20 1953* ORNL 1639 p 13

mounted on the optical bench A slot in the diaphragm permitted isolation of any portion of the discharge for investigation In the work reported here one fifth of the height of the discharge was photographed in each exposure thus a record was obtained of the variation of temperature across the analytical gap The electrode arrangement and zones of the discharge observed are shown in Fig 4 The upper electrodes were National Carbon Company catalog No L4048 (graphite) the lower electrodes were $\frac{1}{8}$ in right cylindrical graphite rods Power source characteristics were the same as those used previously [62] Unless otherwise noted the porous cup was the anode and the gap width was 2 mm Almost all solutions tested in which the total concentration of solutes was 0 25 M or less gave temperature distribution curves of the type shown in Fig 5 The temperature decreased linearly from the porous cup electrode surface to a point approximately 0 6 to 0 8 mm from the counter electrode The slope of the curve then changed in such a way as to always give a temperature of 4200 to 4400°K (extrapolated) at the counter electrode surface

Details of Temperature Behavior Characteristics Increasing the width of the analytical gap lowered the temperature in a manner shown in Fig 6 when 1% $HClO_4$ solutions were used

When the porous cup electrode was used as the cathode rather than as the anode temperatures were approximately 200°K higher all across the gap for 1% $HClO_4$ solutions Neither the magnitude nor the sign of the temperature gradient changed

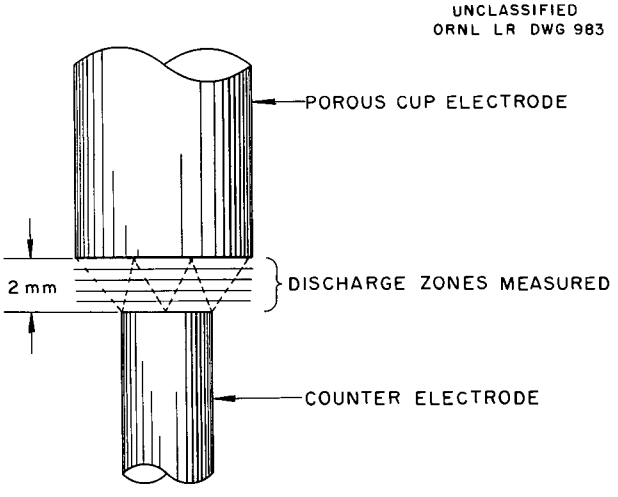

Fig 4 Electrode Arrangement and Discharge Zones Measured

For the solutions tested so far (alkali chlorides in 1% H_2SO_4 and alkaline earth perchlorates and zinc perchlorate in 1% $HClO_4$) an increase in salt concentration resulted in a decrease in the

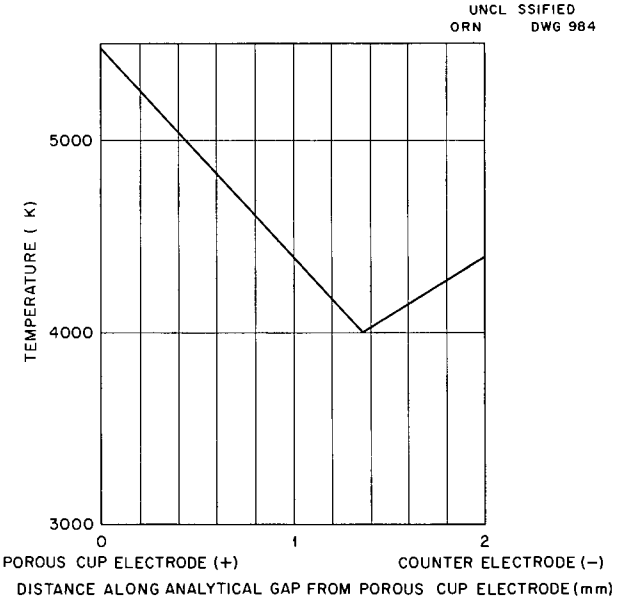

Fig 5 General Shape of Temperature Gradient Curves

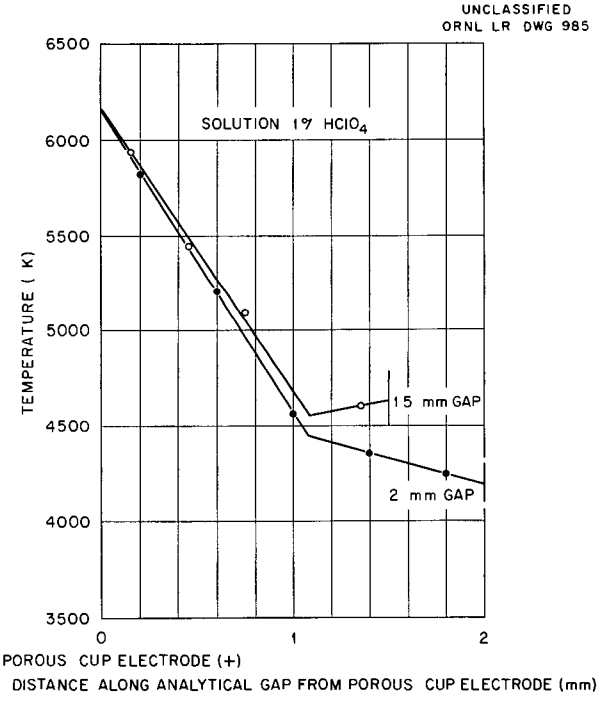

Fig 6 Effect of Analytical Gap Width on Temperature Distribution

temperature at the porous cup electrode surface and a reduction in magnitude of the (negative) slope of the left branch of the curve The temperature at the counter electrode was essentially unaffected by changes in the concentration of solutes A typical plot of results is shown in Fig 7 When salt concentrations were increased above 0 25 formula weight of metal per liter the left branch of the curve usually departed from linearity the temperatures near the porous cup electrode decreasing rapidly Temperatures at the counter electrode remained in the 4200 to 4400°K range regardless of variation of solute concentration Table 5 is a summary of the temperature data obtained thus far

Except for the very lowest ionization potentials the surface temperatures of the porous cup electrode increased with increasing ionization potential of the solute metal (see Fig 8) Temperatures at the counter electrode remained close to 4400°K regardless of composition of the solution being analyzed

Variations of Band and Line Intensities Across the Analytical Gap

C Feldman M K Wittels

When the analytical gap is 2 mm OH bands are approximately three times as intense near the porous cup electrode as they are near the counter electrode regardless of polarity

CN bands are at least three times as intense near the counter electrode as they are near the porous cup electrode regardless of electrode polarity The magnitude of this ratio may vary with the nature and concentration of the solute

Solute metal lines were usually more than ten times as intense near the counter electrode as near the porous cup electrode In most cases over 80% of the light emitted by solute lines was emitted in the half of the analytical gap near the counter electrode This is a region of comparatively low temperature gradient

Effect of Freezing on Photographic Emulsion Contrast Factors

J Y Ellenburg C Feldman

Owen has suggested[63] that the contrast factors of spectrographic emulsions might remain more constant if the emulsions were stored at 0°F (−17 8°C) rather than at the customary 40°F (4 4°C) Because no quantitative data were available on comparative rates of change of contrast factors at

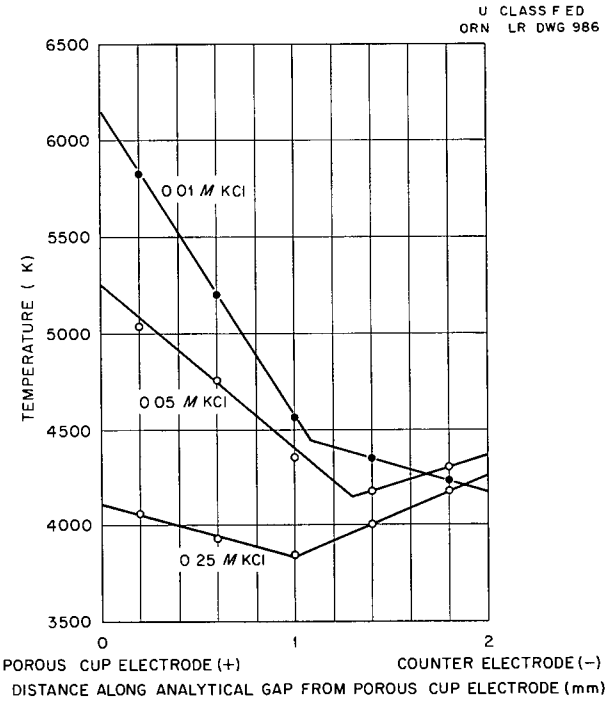

Fig 7 Effect of Potassium Concentration on Temperature Distribution in Porous Cup Discharges

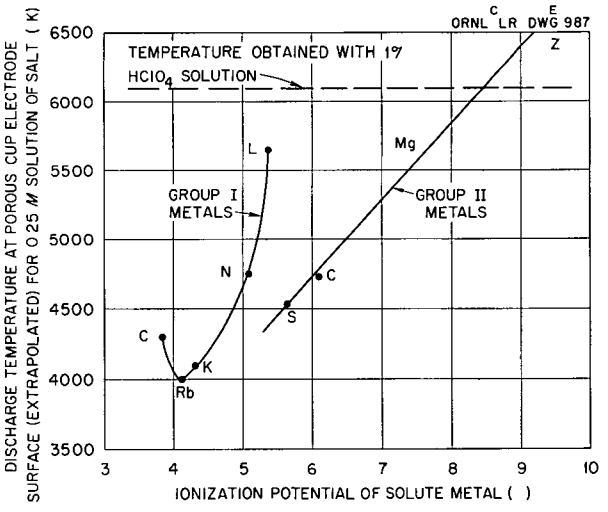

Fig 8 Variation of Porous Cup Electrode Surface Temperature with Ionization Potential of Solute Metal at 0 25 M Concentration

[63] L E Owen Goodyear Atomic Corporation trainee at K 25 pr v te commun at on to C Feldman Jan 1953

TABLE 5 POROUS CUP ELECTRODE SURFACE TEMPERATURES AND NEAR BRANCH TEMPERATURE GRADIENTS IN POROUS CUP DISCHARGES – 2 mm GAP WIDTH

SOLUTE	TEMPERATURE AT SURFACE OF POROUS-CUP ELECTRODE (°K)	TEMPERATURE GRADIENT OF NEAR BRANCH (°K/mm)
1% $HClO_4$	6100	–1550
0 25 M LiCl in 1% H_2SO_4	5650	–1150
0 25 M NaCl in 1% H_2SO_4	4750	–400
0 01 M KCl in 1% H_2SO_4	6100	–1550
0 05 M KCl in 1% H_2SO_4	5200	–820
0 25 M KCl in 1% H_2SO_4	4100	–250
0 05 M RbCl in 1% H_2SO_4	4800	(nonlinear)
0 25 M RbCl in 1% H_2SO_4	4000	(nonlinear)
0 50 M RbCl in 1% H_2SO_4	3300	(nonlinear)
0 25 M CsCl in 1% H_2SO_4	4300	–750
1 0 M CsCl in 1% H_2SO_4	4250	(nonlinear)
0 25 M $Be(ClO_4)_2$ in 1% $HClO_4$	5050	–850
0 25 M $Mg(ClO_4)_2$ in 1% $HClO_4$	5700	–1000
0 25 M $Ca(ClO_4)_2$ in 1% $HClO_4$	4730	–430
0 25 M $Sr(ClO_4)_2$ in 1% $HClO_4$	4550	–300
0 25 M $Zn(ClO_4)_2$ in 1% $HClO_4$	6450	–1600

Data not comparable w th other data n this table Discharge run in wind tunnel because of possible toxicity of beryll um mist

these temperatures this effect was investigated experimentally

A shipment of SA1 film all from the same emul sion batch had been divided upon receipt into three groups of rolls One group had been calibrated immediately A second group was stored in moisture proof metal containers at 0°F (–17 8°C) and a third group was stored in similar containers at 40°F (4 4°C) After one year of storage the second and third groups have recently been removed and calibrated All calibrations were done by the two step procedure in which the Seidel function was used Details of the procedure are given by Feldman [64] All preliminary curves were straight lines with 45 deg slopes the contrast factors listed in Table 6 therefore characterize the Seidel function calibration curve throughout the range of transmittancies measured (3 to 95%) It is evident from Table 6 that the contrast factors were not changed essentially after a 1 year storage at 0°F (–17 8°C) but that there was a perceptible increase in contrast after 1 year of storage at 40°F (4 4°C) No differences could be detected among the clear plate readings obtained with the three groups of rolls

The Sifter Electrode and Its Application to the Determination of Boron in Graphite and Carbon

C Feldman J Y Ellenburg

Previous attempts to develop a spectrochemical procedure in which anodic heating is used to vola tilize the sample[62] have failed to yield a tech nique giving the long range reproducibility (relative standard deviation $\lesssim$3%) and accuracy desired In the belief that results would be improved by trans porting the sample into the discharge by some mechanism that would avoid selective volatilization of constituents of the sample the sifter elec trode shown in Fig 9 was developed The holes in the sifter (upper) electrode are $\frac{1}{32}$ in in diam eter the lower electrode is a flat topped $\frac{1}{8}$ in dia

[64] C Feldman Suggested Practices for Photographic Photometry in Spectrochemical Analysis Method E 2 SM 2 2 in *Methods for Emission Spectrochemical Analy sis* American Society for Testing Mater als Philadelphia 1953

TABLE 6 EFFECT OF STORAGE TEMPERATURE ON CONTRAST FACTOR OF SA1 EMULSION

APPROXIMATE WAVELENGTH (Å)	CONTRAST FACTOR $\left(\frac{d\Delta}{d \log I}\right)$		
	On Receipt	After 1 year Storage at 0°F (−17 8°C)	After 1 year Storage at 40°F (4 4°C)
2600	3 35	3 35	3 54
2800	3 35	3 35	3 54
3000	3 35	3 35	3 54
3200	3 35	3 35	3 54
3400	3 54	3 64	4 08
3600	3 44	3 44	4 08
3900	4 03	4 03	4 53
4300	4 08	4 13	4 67

Δ = Seidel function I = ntensity

graphite rod The analytical gap is 2 mm Excitation is provided by an Applied Research Laboratories model 2025 spark source that operates at 2 kva with 0 045 mh inductance The input voltage meter reading was 190 v the primary voltage meter reading was 95 v The electrostatic repulsion between particles caused by the discharge combined with mechanical vibration from the same source causes the powdered sample to sift through the holes in the electrode and into the discharge

Preliminary readings of the line intensity ratio B I 2497 73/Cu I 2492 146 in a mixture that contained approximately 10 ppm B and 5000 ppm Cu indicated a relative standard deviation $\leq 3\%$ and a sensitivity limit of about 2 ppm Approximately 60 to 80 mg of sample is consumed per exposure

With suitable provision for exhaust this procedure has been used to excite glass sand TiO_2 phosphate rock and other nonconducting powders obtained as NBS standard samples Most trace elements in these samples for which concentrations are known have been detected in spectra obtained with the sifter electrode

New Working Curves Developed by the Porous Cup Procedure

M Murray A J Estepp

The new analytical curves listed in Table 7 were developed by the porous cup technique

INORGANIC PREPARATIONS

D E LaValle

Special Preparations

D E LaValle

The following preparations were carried out for the Nuclear Physics and Low Temperature Groups of the Physics Division 1 5 g of samarium ethyl sulfate $Sm^{152}(C_2H_5SO_4)_3$ 105 g of sodium copper uranyl acetate $NaCu(UO_2)_3(C_2H_3O_2)_9\ 9H_2O$ and solid solutions of 0 7 2 5 and 10% UF_3 in $LaCl_3$ A solid solution of 2% UCl_3 in $LaCl_3$ and a 50 g quantity of anhydrous $MnCl_2$ were also prepared

A series of manganites was prepared in 50 g quantities each for the Nuclear Physics and Neutron Diffraction Groups of the Physics Division These preparations included $CaMnO_3$ and $LaMnO_3$ and various admixtures of the two One preparation of $NdMnO_3$ was also made and two cobaltites $LaCoO_3$ alone and with 0 2 mole % $SrCoO_3$ were prepared

The preparation of a series of complex fluorides was begun for the Fused Salts Group of the Chemistry Division Quantities of 100 g each of K_2TiF_6 and K_2ZrF_6 were prepared by the wet chemical procedure Several attempts were made to prepare K_2NiF_6 by fluorination of mixtures of potassium and nickel salts but thus far only small quantities of the pure material have been obtained

An 11 g quantity of sodium chloroiridate $Na_2IrCl_2\ 6H_2O$ was made for the radiochemical

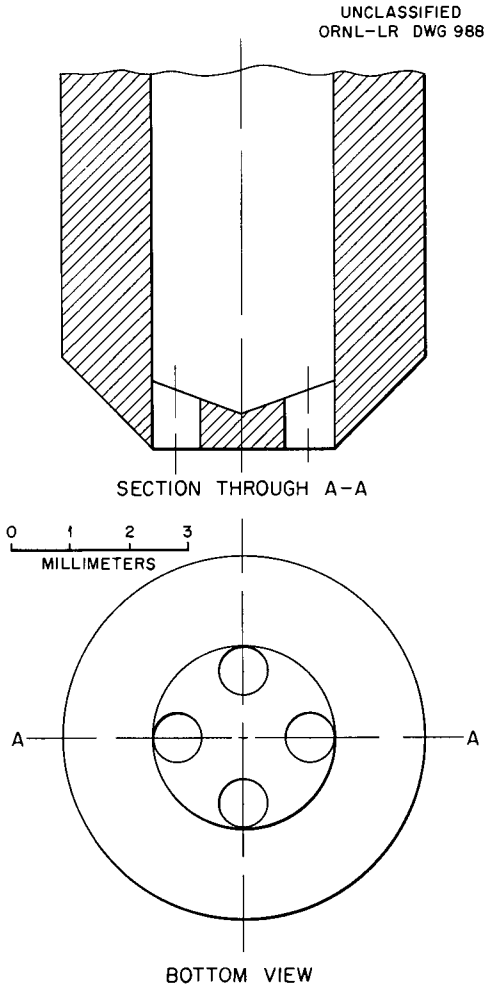

Fig 9 The Sifter Electrode

groups of the Analytical Chemistry Division

A 10 g sample of high purity $AlPO_4$ was prepared for the 86 inch Cyclotron Physics Group of the Electronuclear Research Division

Phosphors

R H Sampley

For the Physics Division lithium iodide phosphors were prepared by use of the following activators $EuCl_3$ EuI_2 Po Pu and Rb Other compounds prepared were LiI Li_2S and NaI Special purifications of LiI Eu and xylene were made The Physics Division was assisted in the separation of manganese barium and thallium

TABLE 7 NEWLY ESTABLISHED ANALYTICAL CURVES – POROUS CUP TECHNIQUE

METAL AND WAVELENGTH (Å)	EXCITATION POTENTIAL (ev)	CONCENTRATION (ppm)
Subject Element		
Eu 2813 95		20 to 100
Nb II 2950 88	6 74 + 4 69	6 to 100
Ru I 3498 94	3 53	3 to 50
Si I 2516 12	4 93	2 5 to 40
Ti II 3236 57	6 81 + 3 84	1 5 to 100
T II 3228 61	6 81 + 4 90	1 5 to 100
V I 3185 396	3 94	6 to 100
V I 3185 396	3 94	6 to 100
Internal Standard		
Co II 2663 53	7 84 + 5 87	75
V II 2880 03	6 71 + 4 63	500
Co I 3462 80	4 19	75
Co I 2411 62	5 22	75
Y II 3203 32	6 5 + 3 96	16
Y II 3203 32	6 5 + 3 96	16
Co I 3409 18	4 13	75
Co I 3044 04	6 00	75

OPTICAL AND ELECTRON MICROSCOPY

T E Willmarth

F M Toomer T G Harmon
I H Gary J M Smith

Corrosion Studies

A routine examination procedure in which microscopy and electron diffraction are employed has been established for the study of the internal surfaces of test bombs after their exposure to corrosive conditions in out of pile tests The outline of the procedure follows

1 The bomb is cut longitudinally

2 The surface of the inner wall is examined for pits etc

3 One longitudinal section is cut four ways to isolate the separate sections of the bomb that have been in contact with the vapor phase vapor liquid phase interface and liquid phase and to isolate the bottom section of the bomb that contains the welded in thermocouple

4 Replicas are made if necessary of interesting surface areas for electron microscopy

5 Small portions of oxide film coatings or corrosion products are scraped from each section and retained for electron diffraction and spectrographic analyses

6 The remainder of the adhering oxide film is electrolytically stripped and segments of the film are mounted on electron microscope screens for electron microscopy of film structure and electron diffraction to identify film components

7 Optical metallography is employed to determine the structure of the basic metal in the bomb and to indicate the nature of areas that show unusual attack or gross deformities

8 Electron metallographic study is made of replicas taken in step 4 of areas that contain abnormal structures or deformities

The procedure described is supplemented by the following additional methods of examination if their use is suggested by the observations made

1 Activation analysis[65] is used to identify gross inclusions disclosed in step 7 and to determine the presence of components of high activation cross section

2 Corrosion product components are examined[66] by x ray if identification cannot be made by electron diffraction

Typical of the information that can be obtained by use of the procedure outlined are the results of the examination of two out of pile test bombs One was a type 347 stainless steel bomb that had been exposed to an aqueous solution that contained UO_2SO_4 (37 g/liter) and $CuSO_4$ (0 01 *M*) at 250°C the other was a titanium bomb that had been exposed to an aqueous solution of UO_2SO_4 (40 g/liter) and $CuSO_4$ (0 01 *M*) at 250°C Examination of the stainless steel bomb disclosed

1 gross pitting of the metal that had been in contact with the vapor phase
2 size variation in microcrystal constituents of oxide layers of the metal that had been in contact with the liquid and vapor phases
3 the identity of the components of the film which is formed by contact of the metal with the liquid phase as Fe_2O_3 and of that formed by contact with the vapor phase as Fe_2O_3 and MnO_2 (0 to 1) $MnO\,nH_2O$ also a high percentage of manganese as indicated by spectrographic analysis
4 crevices at the inner bomb base where welding had failed to bond the bomb body to the thermocouple insert
5 abnormal structure of bomb metal that is a high percentage of parallel carbide stringers

The results of the inspection of the titanium bomb

1 indicated areas of nonhomogeneous structure
2 identified the film layers as TiO_2 (anatase) and a titanium uranium compound
3 determined the microstructure in regions of nonhomogeneity (Fig 10)
4 disclosed the presence of iron in the nonhomogeneous regions of the metal matrix
5 showed the presence of a number of components of high activation cross section

As a result of the microscopic and diffraction studies of these and similar out of pile test bombs it was decided to make a preliminary metallographic study of randomly chosen samples of all metals to be used for high pressure test bombs prior to fabrication of the bombs This too has been established as a routine procedure and it has been used in examining a large number of samples of Zircaloy titanium and stainless steel

Additional corrosion problems included the examination of plugged capillary fittings from exposed test bombs to determine the nature of the corrosion products pitting etc Also included was the identification of the oxide layers on type 304 ELC stainless steel that had been exposed to a solution 0 02 *M* in UO_2SO_4 and 0 005 *M* in H_2SO_4 at 225°C for 1315 hr on type 304 ELC stainless steel that had been exposed to a solution 0 02 *M* in UO_2SO_4 and 0 005 *M* in H_2SO_4 at 320°C for 682 hr and on type 347 stainless steel that had been exposed to a UO_2SO_4 solution (40 g/liter) at 225°C for 500 hr

Qualitative Analysis by Electron Diffraction and Microscopy

The yellow colored solute from columns of Filter aid and the gray black material included in a fused salt mixture of aluminum oxides and uranium aluminum alloy were studied by electron diffraction and by chemical microscopy or by both in order to determine their principal chemical constituents

Particle Size Studies

Particle size studies were made by optical or electron microscopy on the following classified

[65] G W Ledd cotte Activation Analyses Group
[66] R Ell son Chem stry Division

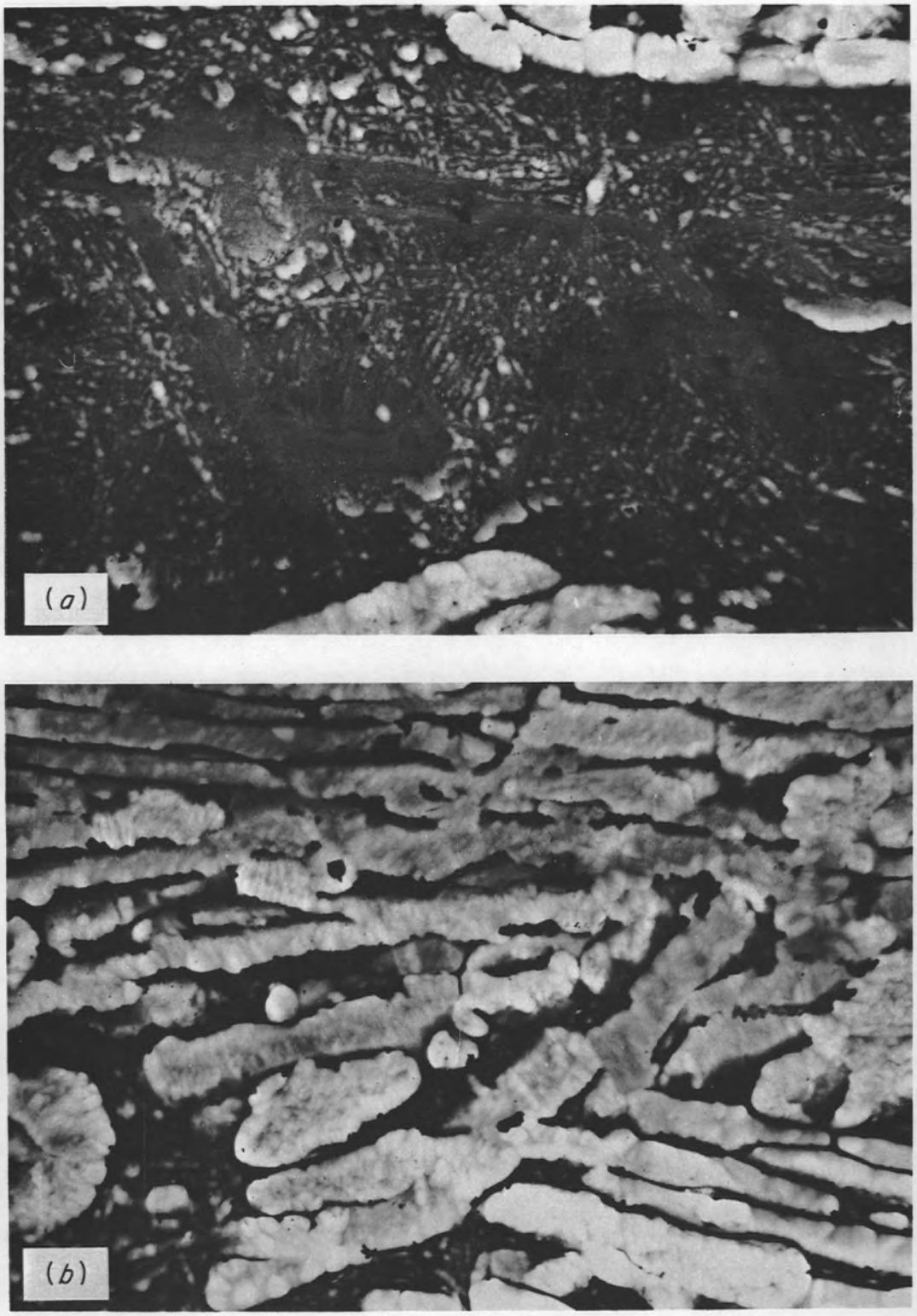

Fig. 10. Electron Micrographs of Titanium Test Bomb. (a) Microstructure of impurity in titanium test bomb. (b) Distorted titanium structure bordering impurity. 6250X.

residues from Filter aid columns $Th(COOH)_4$ precipitated under a variety of conditions thorium hydroxides treated with $(NH_4)_2CO_3$ and NH_4F thorium oxides produced under different conditions samples from thorium loop run T 17 slurries of KCl in PDA bacteriophage (Fig 11) Ames ThO_2 fired at 1100°C ThO_2 from $Th(COOH)_4$ fired at 650°C ThO_2 uranium oxide (0 5% uranium oxide) from the $Th(COOH)_4$ NaCl produced by a nuclei source and collected by a thermal precipitator silver halide grains from spectrographic plate emulsions and the compounds $(NH_4)_2U_2O_7$ UO_3 H_2O and $(UO_2)_3(PO_4)_2$ $4H_2O$

Metallographic Photomicrographic and Surface Studies

The following materials were studied by metal lography photomicrography or electron microscopy titanium exposed to iodine vapor nickel plated cobalt numerous foreign and domestic ion exchange resins porcelain coated steel a titanium impeller examined at various intervals after loop runs replicas of uranium microstructures faces of a single copper crystal pearlite colonies in steel (Fig 12) and zirconium silver alloys

Autoradiography

Autoradiographs were taken of inclusions in ti tanium of cross sections of sheep bones and of cross sections of porcelain coated steel

Equipment Modifications and Changes

A metal evaporator having a smaller air volume to exhaust than that of the evaporator in current use and consequently a greatly increased pumping rate was designed and built for electron micro scopic shadowcasting The large metal evaporator that is being displaced by the smaller one is to be converted for use as a cathodic etcher

ORNL MASTER ANALYTICAL MANUAL

Authors of Methods and H P Raaen

A new section Section 5 Nuclear Analyses Methods is being added to the *ORNL Master Analytical Manual* The general outline of the content of this section is

5 Nuclear Analyses Methods
- 5 000 General
- 5 100 Activation Analyses
- 5 200 Isotopic Tracer Analyses
- 5 300 Autorad ograph c Analyses
- 5 400 Nuclear Part cle Attenuation Analyses

The Activation Analyses subsection has been relocated from Section 2 Radiochemical Analy ses where it appeared as subsection 2 100 to subsection 5 100 The lists of the methods that are yet to be written for each section of the Manual have been revised to bring them up to date Forty three new methods have been issued to the Manual The authors titles numbers and dates of these methods are given in the section of this report entitled Presentations of Research Results Eight new manuals were issued

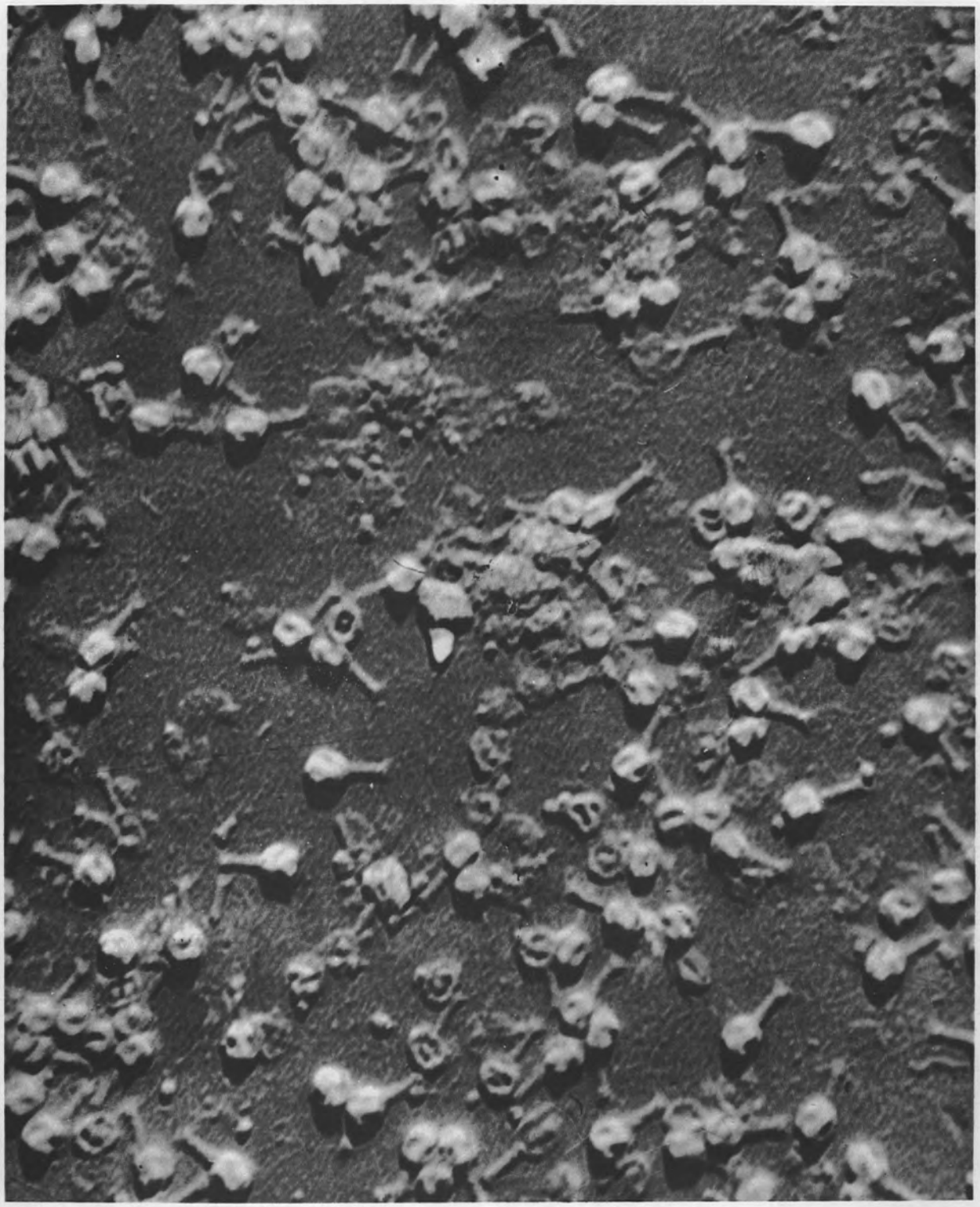

Fig. 11. Bacteriophage T-4 and Ghosts. 80,000X. Reduced 15%.

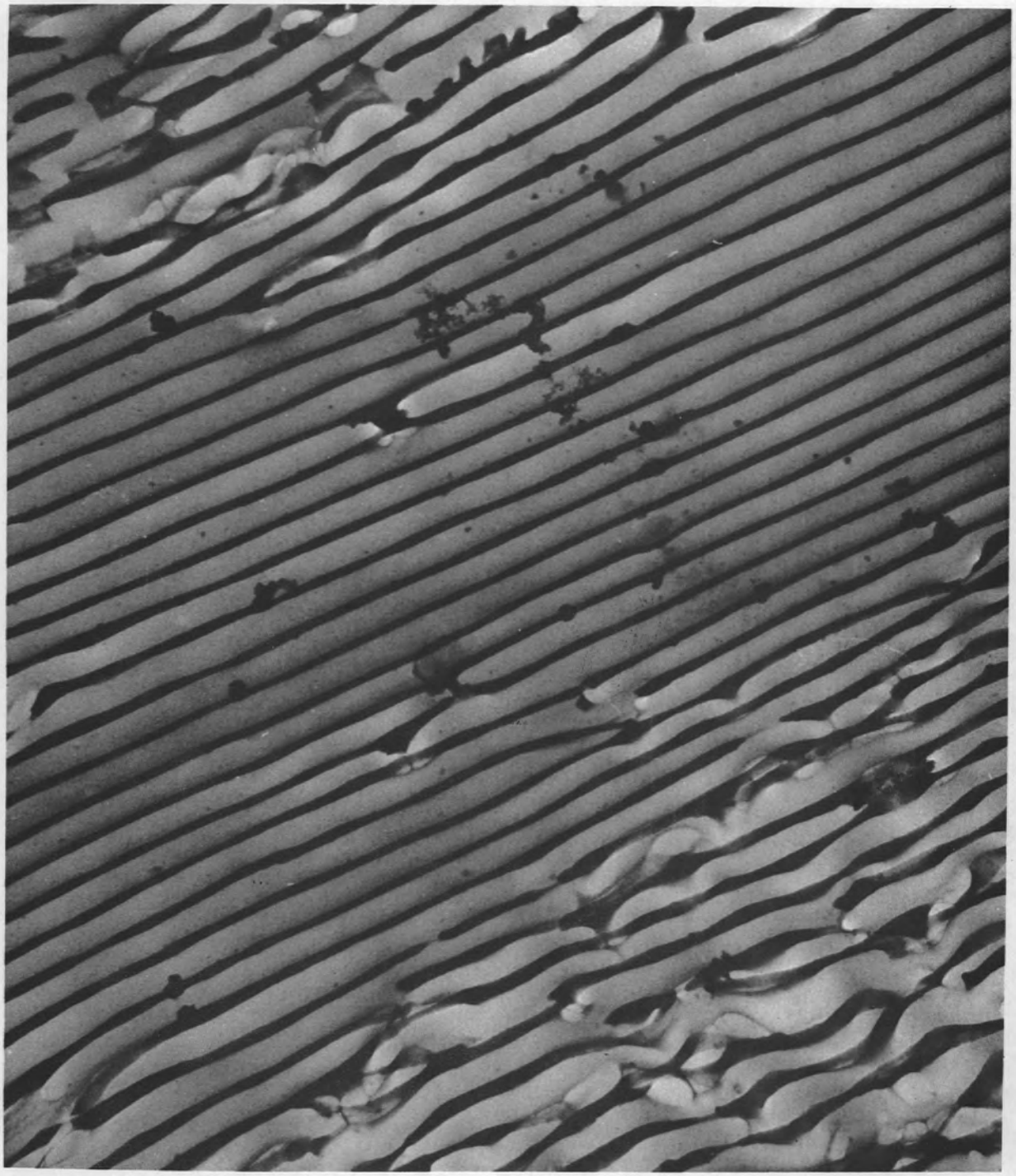

Fig. 12. Pearlite in High-Purity Eutectoid Steel. 0.75% C, 1.0% Mn. Heat treatment: 1000°C, 30 min; 680°C, 1080 sec. 25,000X. Reduced 21%.

SERVICE ANALYSES

A semiannual summary of the service analyses made at the X 10 Analytical Chemistry Division laboratories is given in Table 8

IONIC ANALYSES

P F Thomason

The majority of the service work by the Ionic Research and Development Group continued to be for the Orex and the HR projects The methods have been discussed previously [1 2] For the HRP a number of Graphitar bearing materials were analyzed for chloride by the catalytic combustion method outlined by Pregl [3]

RADIOCHEMICAL ANALYSES

S A Reynolds

Samples analyzed for the Electronuclear Research Division comprised 51% of the service analyses reported by the Radiochemical Analyses Group These analyses were radiochemical determinations relative to the cyclotron research program Analyses of new and unusual products by means of the scintillation spectrometer x ray spectrometer and 4 π counter were performed for the Operations Division Most of the work for other divisions involved spectrometry and special decay and absorption studies as required for qualitative and quantitative activity analyses

ACTIVATION ANALYSES

G W Leddicotte

The extent of interest that has been shown by the Oak Ridge sites and outside organizations in activation analysis service is summarized in Table 9 The difference in number between the inquiries and the requests for analyses that have been received from outside organizations can be explained in part by the normal time lag required for submission of samples The following elements were determined routinely in many materials copper cobalt zinc iron arsenic chlorine iodine barium uranium antimony manganese nickel aluminum zirconium sodium silicon and tantalum

GENERAL ANALYSIS LABORATORY

J H Edgerton

Micro Pyrohydrolysis of Fluoride

J H Edgerton J E Lee Jr

A new apparatus for the micro pyrohydrolysis of fluorides has been designed by Edgerton and Lee and constructed by H L Hemphill [4] The principal features are the use of a platinum tubulated Gooch crucible for the reaction unit and a reduced pressure system for collection of the distillate in an alkaline solution The partial vacuum facilitates close regulation of the supply of superheated steam and essentially eliminates loss of evolved hydrogen fluoride at the assembly joint of the tubulated crucible

Mechanical feasibility of the apparatus was established by satisfactory recovery of fluoride that is ±2% of the theoretical value from the pyrohydrolysis of UF_4 Analysis of fluoride eutectics has been carried out by the use of Al_2O_3 as catalyst [5] Fluoride recovery was comparable with that obtained by pyrohydrolysis in other equipment and on a larger scale [6] Analysis of fluoride eutectics requires a relatively high temperature to assure that the reaction is complete regardless of eutectic particle size Although successful analyses have been made the reaction condition parameters have not yet been established

This micro pyrohydrolysis apparatus is being used currently to analyze liquid fluoride samples (Thorex feed) Minor mechanical difficulties were apparent and most of them have already been corrected It is planned to adapt the apparatus for remote control operation The mechanical attachment of the loaded crucible to the steam and distillate lines presents the greatest problem The

[1] P F Thomason Ionic Analyses – Development Group *Anal Chem Quar Prog Rep Jan 10 1951* ORNL 955 p 65

[2] ORNL CF 53 2 236 (limited access)

[3] J Grant *Quantitative Organic Microanalysis Based on the Methods of Fritz Pregl* 5th ed p 108 Churchill London 1951

[4] Analytical Instrumentation Group

[5] J H Edgerton Fluoride in ANP Fuel Eutectic *Anal Chem Quar Prog Rep Dec 26 1951* ORNL 1233 p 53

[6] J H Edgerton Fl oride in ANP Fuel Eutectics and Other Salts M cro Pyrohydrolysis Method Method No 9 0922280 (May 20 1953) of *ORNL Master Analytical Manual* ORNL CF 53 1 235 Vol I or III

TABLE 8 SUMMARY OF ANALYTICAL SERVICE WORK AT X 10 SITE FOR THE PERIOD ENDING MARCH 1954

	NUMBER OF PERSONNEL		ORNL DIVISIONS REQUESTING ANALYSES															OTHERS REQUESTING ANALYSES		
	TECHNICAL	NONTECHNICAL	ANALYTICAL CHEMISTRY	ANP	BIOLOGY	CHEMICAL TECHNOLOGY	CHEMISTRY	ELECTRONUCLEAR RESEARCH	ENGINEERING & MAINTENANCE	EDUCATIONAL DIVISION	HEALTH PHYSICS	HRP	METALLURGY	OPERATIONS	PHYSICS	REED	SOLID STATE	K 25	OTHERS	TOTAL DETERMINATIONS
GROUP MAKING ANALYSES			NUMBER OF DETERMINATIONS																	
A t to A ly	4	5	1196			990	40				74	4	256	637			1		515	3 713
ADP C t l	9	16				24 550	415													24 965
G l A ly	6	7				1 561	800		59		99	30	1133	187	215		472			4 556
G l R d h m l	3	3		20		2 470					915	268								3 673
HRE	2	2				80	129					781								990
l A ly	6	1	55			252	336							3	25	44	2			717
L bo to y d S m Wo k C t ol	2	6				8 540	13				1	66	226	29						8 875
Opt l d El t M opy	4	1	50		35	289	254				45	29	55	64		236				1 057
P l t Pl t Co t ol	2	3				5 476								3						5 479
Pl t m l ol t L b t y	1	3		28		2 708		30				13		6						2 785
R d o h m l A ly	5	1	6		10	34	1	269		3	7	20	12	81	12	7	6	8	56	532
R d t p P d t o Co t l	2	16				1 594	37				20			11 591	346		54	11	486	14 139
Sp t h m l A ly	4	0				288	153						81	89	37	253	23			924
TOTAL	50	64	1307	48	45	48 832	2178	299	59	3	1161	1211	1763	12 690	635	540	558	19	1057	72 405

Th g o p l do h d d l pm t w k

TABLE 9 SUMMARY OF ACTIVATION ANALYSIS SERVICES

PERIOD	INQUIRIES FROM OUTSIDE ORGANIZATIONS	REQUESTS FOR ANALYSES	
		F om Oak R dge Plant Sites	From Outside Organ ations
March 1 1951 to October 1 1953	175	135	57
October 1953	4	8	2
November 1953	6	8	5
December 1953	20	6	5
January 1954	15	9	5
February 1954	20	15	6
March 1954	15	11	5
TOTAL	255	192	85

Some as number of nqu ries

completion of certain fluoride determinations requires a thorium nitrate titration [7] Spectrophotometric detection of this difficultly observed end point is being evaluated Initial tests are being made on solutions of fluoride concentration of 0 1 mg/ml

Special Analyses

J H Edgerton and group

An automatic titrator[8] which uses a selsyn servo system to control the velocity of titrant addition is being used in the determination of uranium and sulfate in highly radioactive samples from the ANP and HR projects The special shielded cubicle described in the section of this report entitled Shielded Cubicle for Use in Handling Radioactive Materials is required in work with these samples Highly radioactive (300 r/hr) stainless steel samples that contain as little uranium as 100 ppm will also be analyzed remotely in the same barricade by the continuous extraction of the uranium into tributyl phosphate and determination of the uranium both by automatic titration with ceric sulfate solution and by polarography

Other special analyses were made as follows For the Physics Division lithium and azide were determined in LiN_3 The lithium was precipitated as the sulfate and the azide was determined by ceric titration [9] Also manganese(IV) in $LaMnO_3$ was determined by evolving chlorine into a solution of KI and titrating the liberated iodine with sodium thiosulfate solution [10] For the Metallurgy Division and Physics Division vacuum fusion analyses were made for hydrogen oxygen and nitrogen in alloys of titanium zirconium hafnium and chromium and in stainless steels For the Chemical Technology Division thorium formate oxalate nitrogen nitrates and sulfates were determined in slurry samples from the Thorium Blanket Reactor Other separations and analyses were made on uranium thorium eutectic salts alloys slurries, and reactor fuels for the Chemical Technology Chemistry Metallurgy Physics and Solid State divisions and also for the ANP and HR projects

RADIOISOTOPE PRODUCTION ANALYSES

E I Wyatt

Decay studies are being conducted on many different gamma emitting radionuclides in order to

[7] J H Edgerton Determination of Fluor de *Anal Chem Qua Prog Rep Sept 10 1951* ORNL 1129 p 49 52

[8] M T Kelley N D Lee and H L Hemphill Automatic Titrator with Velocity Servo Control of Titrant Addition *Anal Chem Semiann Prog Rep Oct 20 1953* ORNL 1639 p 6

[9] J Martin The Volumetric Determination of Hyarazoic Acid by Oxidation with Ceric Sulfate in Ac d Solut on *J Am Chem Soc* 49 2133 (1927)

[10] G H Jo ker and J H Van Santen Ferromagnetic Compounds of Manganese with Perovsk te Str cture *Physica* 16 337 (1950)

determine their half lives The radionuclides being observed are believed to be very pure In the future precautions will be taken to look for impurities after the dominant activity has decayed through about five half lives The data from some of the completed decay studies are given in Table 10 In each case the gamma ionization chamber was the measuring instrument used

GENERAL RADIOCHEMICAL ANALYSES

C L Burros

The Chemical Technology Division was assisted in the following studies effect of TBP concentration on the decontamination of fission products from U^{235} evaluation of various organic fluids as possible diluents for TBP in hot processing applications demonstration of the extent of decontamination of fission products from uranium that had been extracted by the EXCER process decontamination of thorium from fission products and denitration of uranyl nitrate hexahydrate obtained from various sources The Chemical Technology Division was also assisted in the Waste Metal Recovery program

Relative to the Health Physics Division s work fall out activities and fission product activities discarded into the air by various isotope separation processes were identified also fission products from local wastes were isolated by cation and anion exchange methods and the extent of contamination of White Oak Lake and the settling basin was studied

Some consideration was given to the HRP problems of decontamination of stainless steel equipment identification and quantitative measurement of activities in scale and in descaling solutions in HRE fuel and fuel burnup

Identification and quantitative measurements of the activities in mixed fission products from reactor fuel elements were made for the ANP project

LABORATORY AND SEMI WORKS CONTROL GROUP

L T Corbin G R Wilson
L G Farrar

Because of difficulties encountered in the procedure of Horton *et al* [11] for the spectrophotometric determination of inorganic fluoride when thorium aluminum or zirconium is present the procedure was revised to specify a longer distillation period (1 25 hr) The revised procedure gave a 95% recovery of fluoride from samples that contained 0 3 mg of thorium 5 mg of uranium and 0 1 mg of fluoride and from samples that contained 60 mg of aluminum and 0 3 mg of fluoride A recovery of not more than 70% was realized from samples that contained zirconium

[11] A D Horton P F Thomason and F J Miller Spectrophotometric Determination of Inorganic Fluoride *Anal Chem* 24 548 (1952)

TABLE 10 OBSERVED HALF LIVES OF GAMMA EMITTING NUCLIDES

RADIONUCLIDE	PERIOD OF OBSERVATION (days)	OBSERVED HALF LIFE	REMARKS
Au^{198}	12	65 h	Gold wire bombarded in ORNL Graphite Reactor
Ir^{192}	123	72 d	
La^{140}	8	40 h	Lanthanum bombarded in ORNL Graphite Reactor
Mn^{54}	486	300 d	
Nd^{147}	39	11 1 d	Fiss on product source
Ta^{182}	568	115 d	

HOT PILOT PLANT CONTROL LABORATORY

L T Corbin C E Lamb

The transition of the Chemical Technology Division s uranium recovery unit process to a plutonium and americium recovery unit process necessitated a method for the determination of Am^{241} The method developed by G W Smith[12] was adopted for routine use

The precision of the method for the determination of plutonium [13] which was slightly modified was increased by more rigid control of the speed of the stirring motors use of smaller extraction vessels use of a larger volume of organic extractant centri fugation after extraction and improvement of the precision of the alpha counter

Two gas analysis units[14] have been assembled for the analysis of gas samples relative to the Chemical Technology Division s study of con tinuous dissolving Components that can be meas ured are NO NO_2 O_2 CO_2 CO N_2O and H_2

ISOLATION ANALYSES

L T Corbin J H Cooper

The major portion of the work done by the Isola tion Laboratory was for the Amex program[15] of the Chemical Technology Division The only new method required was that for the determination of Am^{241} in aqueous solutions which was provided by G W Smith [12]

[12] G W Smith Americium 241 Method No 2 31030 (in press) of *ORNL Master Analytical Manual* ORNL CF 53 1 235 Vol I or II

[13] R L Walker Total Plutonium Thenoyltrifluor ocetone Extra t on Method Method No 2 31621 and 9 008621 (May 15 1953) *ORNL Master Analytical Manual* ORNL CF 53-1 235 Vol I II or III

[14] W R Tyson and D T Galm Analysis of Gas M xtures Method No 1 0900 and 9 051201 (Sept 17 1952) *ORNL Maste Analytical Manual* ORNL CF 53 1 235 Vol I II or III

[15] R H Rainey *Development of the Amex Process for Americium Recovery* ORNL 1697 (in press)

[16] *Proposal for High Radiat on Level Analytical Facili ties at ORNL* ORNL CF 53-10-31 (Oct 12 1953)

HIGH RADIATION LEVEL ANALYTICAL FACILITY

E J Frederick

The AEC has approved the construction of a laboratory for analytical work on samples of high level radioactivity The high radiation level analytical facility[16] will be located in a 42 × 80 ft addition of the west end of Building 3019 Facilities will include a cell bank consisting of a centralized storage cell of 2500 bottle capacity and seven in line work cells Samples are to be brought into the storage cell either on an over head conveyor or through a carrier access port Strategically located cerium glass or zinc bromine solution windows will permit good viewing into each cell Operations will be performed with through the wall type of master slave manipulators Transfer of samples into each working cell will be through individual transfer ports and transfer between cells will be by a belt conveyor Re movable rear doors will permit access to the cells for maintenance

Engineering progress of the project is as follows

	Estimated Completion (%)
Structural	30
C vil	75
Mechanical	10
Electr cal	10
Piping	20

The following schedule has been set

Des gn and spe f cat ons to be completed	June 1 1954
Contract to be let	July 1 1954
Cont actor to beg n work	July 1 1954

The target date for completion and occupancy is February 1 1955

ANALYTICAL CHEMISTRY DIVISION Y 12 SITE

RESEARCH AND DEVELOPMENT

ANP ANALYTICAL CHEMISTRY

J C White

D L Manning W J Ross J L Mottern

Relative to the ANP Project methods are being developed for the determination of the corrosion products chromium iron and nickel in their various states of oxidation in ARE fuels and in fuel solvents and for the determination of UF_3 and UF_4 in ARE fuels The progress of this work is reported elsewhere[1 2]

HRP ANALYTICAL CHEMISTRY

O Menis

The analytical development work for the HRP consisted in the development and evaluation of procedures for the analysis of slurries of compounds of uranium and of thorium that were taken from dynamic tests of uranyl salt solutions that contained corrosion products and additives and of corrosion products from tests in which stainless steel and other iron alloys were exposed to corrosive conditions

Analysis of Slurries

T C Rains M L Druschel

In general the methods of analysis of slurries additives to slurries and corrosion products remained essentially as reported previously[3] Titanium in ThO_2 slurries was determined by the polarographic method described by Kolthoff and Lingane[4] that uses a citrate supporting electrolyte The relative standard error of the method was ±25% at the 95% probability level for quantities of titanium of the order of 10 μg In order to eliminate perchlorate interference in the determination of cobalt as the complex of tetraphenylarsonium thiocyanate the slurry was dissolved in a nitric acid rather than in a perchloric acid medium

The study of the spectrophotometric titration of uranium(IV) with ceric sulfate[3] was extended to determine the possible interferences It was found that oxalic citric and nitric acids bleach the ceric sulfate reagent The results for uranium(IV) and iron(II) were low by 8 to 11% in the presence of 0 4 to 4 mg of KNO_3 whereas in the presence of 0 5 to 5 mg of phosphate the results were 4 to 8% high The presence of NaCl in 3 *M* concentration changed the shape of the titration curve but did not change the precision of the method When both uranium(IV) and iron(II) are present a characteristic curve for uranium(IV) is obtained in the presence of 3 *M* sodium acetate and the characteristic iron(II) curve is not observed The reverse is true with the presence of 3 *M* acetic acid The procedure is being written for inclusion in the *ORNL Master Analytical Manual*

Analysis of Uranyl Sulfate Solutions

C K Talbott M L Druschel

In order to eliminate some of the disadvantages of the Jones reductor–ceric sulfate procedure for the determination of uranium a stannous chloride reduction method and a cadmium amalgam reductor method were studied

The method of determining uranium by reduction with stannous chloride[5] has the advantage of eliminating the aeration step and the troublesome preparation of zinc amalgam which is subject to poisoning from corrosion products that are present in HR type samples The general conditions of the method were investigated and it was found that the addition of iron(III) in the reduction step was unnecessary The elimination of iron(III) resulted in increased precision The relative standard deviation of the modified procedure for uranium which is being written for issue to the

---

[1] J C White Analytical Chemistry of Reactor Materials *ANP Quar Prog Rep Dec 10 1953* ORNL 1649 p 107

[2] J C White Analytical Chemistry of Reactor Materials *ANP Quar Prog Rep March 10 1954* ORNL 1692 p 107

[3] O Menis C K Talbott and M L Druschel Analysis of Slurries *Anal Chem Semiann Prog Rep Oct 20 1953* ORNL 1639 p 26

[4] I M Kolthoff and J J Lingane *Polarography* 2d ed Vol II p 443 4 Interscience New York 1952

[5] A R Main *The Determination of Uranium by Reduction with Stannous Chloride* TR 111/53 (June 15 1953)

ORNL Master Analytical Manual is less than 0 3% for 20 to 200 mg of uranium

The use of the cadmium reductor in conjunction with the spectrophotometric titration of milligram quantities of uranium and iron[6] suggested its use in the volumetric determination of larger quantities of uranium Bricker and Sweetser reported that no uranium(III) is formed in a 90% cadmium amalgam reductor A study was made with pure solutions of uranyl sulfate that contained approximately 100 mg of uranium and with other solutions that contained from 5 to 40 mg of uranium and as much as 1 mg of chromium(VI) and 0 5 mg of nickel Reductors that contained 75 g of cadmium amalgam in a 9 in long column were employed in the study of degree of amalgamation aging of columns acid concentra tions of the sample and of the wash solution rate of flow of solution from the reductor and aeration of the reduced solution prior to titration The over all result of this study indicates that the first four factors have to be carefully controlled in order to avoid formation of uranium(III) In the presence of high concentrations of chromium the aeration step was always necessary in order to avoid high results The method will be issued to the *ORNL Master Analytical Manual*

Poor precision was observed in the determination of iron in uranyl sulfate solutions by the $\alpha\alpha$ bi pyridyl method[7] when the concentrations of chro mium and nickel were high The procedure was modified so that 10 to 75 μg of iron could be de termined with a relative standard deviation of 2% in the presence of 25 to 200 mg of uranium(VI) of 0 25 to 0 50 mg of nickel and of 0 10 to 2 0 mg of chromium The modification consisted of the addition of a large excess of $\alpha\alpha$ bipyridyl to pre vent the fading of the iron complex color that is caused by the presence of nickel The modified procedure will be written for inclusion in the *ORNL Master Analytical Manual*

In the determination of manganese by the perio date procedure[8] chromium interferes when the weight ratio of chromium to manganese is 10 1 or greater A brief study revealed that the best precision and accuracy are obtained when the sample that contains all the reagents except KIO_4 is used as a reference solution The relative standard deviation of this procedure is 3% for solu tions that contain 50 to 200 μg of manganese and as much as 200 μg of chromium(VI)

Tracer amounts of radioactive Sm^{153} were used to follow the solution stability of approximately 50 μg of nonradioactive samarium in uranyl sulfate solution circulated in HR test loops A scintilla tion counter was calibrated with a uranyl sulfate solution that was in equilibrium with UX_2 The half life of the Sm^{153} after being corrected for the uranium background contribution was found to be 40 h compared with the value of 47 h found in the literature The accuracy of this procedure was satisfactory for the information desired

In order to complete the study of the phenoldi sulfonic acid–colorimetric ion exchange determina tion of nitrate[9] in the presence of uranium the problem of the nitrite interference was studied In the reaction with phenoldisulfonic acid reagent nitrite is partially oxidized to nitrate making it necessary either to preoxidize the nitrite to nitrate and to correct for it or to completely destroy the nitrite Both preoxidation of the nitrite by per manganate and destruction of the nitrite by urea were tried Destruction of the nitrite resulted in poor nitrate recovery The present study indicates that $KMnO_4$ in acidic medium quantitatively oxi dizes microgram amounts of nitrite to nitrate in the presence of uranium The oxidation step is carried out before the ion exchange separation of the uranium On completion of this study the detailed procedure will be written for the *ORNL Master Analytical Manual*

Sulfate in uranyl sulfate solutions was determined by cation exchange separation on a Dowex 50 resin column elution of the sulfate and titration with barium chloride solution This procedure was adapted by R L McCutchen from the method of Fritz and Freeland[10] In a range of 5 to 100 mg of sulfate a relative standard deviation of 0 3% is attained This procedure will be written for the *ORNL Master Analytical Manual*

---

[6] C E Bricker and P B Sweetser Spectrophotometric Titration of Uranium and Iron *Anal Chem* 25 764 (1953)

[7] C J Rodden (Editor in Chief) *Analytical Chemistry of the Manhattan Project* p 422 3 McGraw H Il New York 1950

[8] J C Wh te Manganese Spectrophotometric Pe odate Method Method Nos 1 214810 and 9 00714810 (July 27 1953) in *ORNL Master Analytical Manual* ORNL CF 53 1 235 Vol I or III

[9] O Menis C K Talbott and M L Druschel Analy sis of Slurries *Anal Chem Semiann Prog Rep Oct 20 1953* ORNL 1639 p 26

[10] J S Fritz and M Q Freeland *Direct Titrimetric Determination of Sulfate* ISC-411 (Oct 1 1953)

Analysis of Corrosion Products from Stainless Steel

C K Talbott M L Druschel

In the study of corrosion properties of alloys procedures were required for the analysis of milligram quantities of samples taken from surfaces of steel specimens and also of small fragments of corroded material

The sodium bismuthate oxidation–diphenylcarbazide colorimetric procedure was investigated for the determination of chromium The chromium results for a series of NBS steels that were analyzed by this method varied from the NBS established value by ±1 to ±4%

Nickel in steel was determined by the persulfate oxidation–dimethylglyoxime procedure [11] A differential spectrophotometric technique was employed In order to assure reliable results the concentration of iron in the reference solution had to be within ±3% of that of the sample as much as 4 mg of iron could be tolerated Based on 31 determinations for 5 different NBS steel samples that varied in nickel concentration from 1 75 to 36% the relative standard deviation was about 0 3% The method will be described in a topical report

Identification of metallic coatings found on a stainless steel impeller on a titanium pump impeller and on a steel orifice ring was desired The coatings were too thin to permit the use of the spectrographic sparking technique An electrographic technique [12] based on the use of the Fisher electrographic apparatus was applied In this procedure the sample is made the anode of an electrolytic cell in which a filter paper impregnated with an electrolyte is sandwiched between the anode and an inert cathode Metal ions migrate into the paper by electrolysis and can be identified by spot tests or other means The coatings on the stainless steel impeller and on the orifice ring gave positive tests for chromium To assure that the chromium was from the coating and not from the stainless steel itself steel of the same composition as the impeller was tested under the same conditions and gave a negative test In the case of the titanium impeller no conclusive identifications could be made The titanium specimen had high resistance and very little electrolysis could be effected

[11] M L Druschel O Menis and R Rowan *Modifications of the Dimethylglyoxime Method for the Colorimetric Determination of Nickel Based on the Use of Potassium Persulfate as the Oxidant* ORNL 1430 (Nov 3 1952)

[12] *Symposium on Rapid Methods for the Identification of Metals* Special Technical Publication No 98 American Society for Testing Materials Philadelphia 1950

HRP MATERIALS PREPARATION

S A Reed S R Buxton

Relative to the HRP slurry blanket program a study has been made of methods for preparing kilogram amounts of several thorium compounds that are of interest as slurry media The development of an economical method for preparing a non abrasive or soft form of thorium oxide has been of major interest Thorium formate $Th(OOCH)_4$ has been studied as an intermediate for this purpose Results from preliminary tests indicate that $Th(OOCH)_4$ can be prepared either batchwise or continuously by the addition of a thorium nitrate solution to concentrated formic acid The reaction is

$$Th(NO_3)_4 + 12HCOOH \longrightarrow Th(OOCH)_4 + 2N_2O + 8CO_2 + 10H_2O$$

The product is essentially free of corrosive anions such as nitrate sulfate and chloride and it may be readily decomposed to amorphous ThO_2 at 650°C

From initial work it appears feasible that $Th(OOCH)_4$ may also be suitable for the preparation of high purity thorium hydroxide $Th(OH)_4$ Theoretically formic acid is decomposed to carbon dioxide and hydrogen when in contact with metallic palladium The catalytic reaction occurs at room temperature and appears to progress more rapidly at higher temperature A reaction between metallic palladium and a water slurry of $Th(OOCH)_4$ should result in the production of $Th(OH)_4$ In a current study of this reaction palladium impregnated ThO_2 beads approximately $\frac{1}{16}$ in in diameter are used in the form of a fluidized bed and in a close packed column to catalyze the decomposition of a water slurry of $Th(OOCH)_4$

Approximately 2 kg of thorium acetylacetonate $Th(C_5H_7O_2)_4$ was prepared by a modification of the procedure of Young *et al* [13] This material was analyzed for carbon hydrogen and thorium it was found that a compound of the theoretical composi

[13] R C Young C Goodman and J Kovitz The Determination of the Vapor Pressure of Thorium Acetylacetonate by Radioactivity Measurements *J Am Chem Soc* 61 876 (1939)

tion had been obtained Its melting point was 171 3°C The usefulness of this compound as a thorium carrier in blanket studies would be dependent in part on its thermal stability No decomposition of the material was noted below 200°C when it was heated in air at atmospheric pressure Further decomposition studies in a closed system and at higher pressures are planned

Several other thorium compounds were prepared for special work in the slurry studies Thorium orthophosphate $Th_3(PO_4)_4 \cdot ?H_2O$ was prepared by two methods (1) dissolving ThO_2 or $Th(OOCH)_4$ in hot 85% orthophosphoric acid and separating the thorium orthophosphate (2) mixing an excess of 2 M $Th(NO_3)_4$ solution with 85% orthophosphoric acid White crystals of $Th_3(PO_4)_4 \cdot ?H_2O$ were obtained in both cases

High purity thorium nitrate hexahydrate $Th(NO_3)_4 \cdot 6H_2O$ was prepared by dissolving technical grade $Th(NO_3)_4 \cdot 4H_2O$ in acetone The acetone solution was filtered to remove oxynitrates and other insoluble material After water was added the mixture was heated to 120°C and then cooled $Th(NO_3)_4 \cdot 6H_2O$ separated

Thorium oxalate hexahydrate $Th(C_2O_4)_2 \cdot 6H_2O$ was prepared by adding a saturated solution of oxalic acid to a 1 M solution of $Th(NO_3)_4 \cdot 6H_2O$ A white crystalline compound of theoretical composition was obtained

A quantity of thorium pyrophosphate ThP_2O_7 was prepared by dissolving ThO_2 in boiling H_3PO_4 then heating the solution to 320°C and cooling it ThP_2O_7 separated

QUALITY CONTROL

R L McCutchen C D Susano

The types of samples tested for control purposes in the Raw Materials and HRP Laboratories of the Analytical Chemistry Division at the Y 12 site remained unchanged Special types of standard solutions were prepared for the ANP Analytical Laboratory and were tested for control purposes

The control work in the laboratories of the Analytical Chemistry Division at the X 10 site has been curtailed At the present time only one laboratory Building 4500 is reporting test results for control purposes It is anticipated that during the next period laboratories in Buildings 3019 and 3508 will be reporting uranium values for control purposes

The distribution by laboratory of the 3069 determinations evaluated for control purposes is summarized in Table 11 and for purposes of comparison the control data for the previous period are also shown

TABLE 11 SUMMARY OF DETERMINATIONS EVALUATED FOR CONTROL PURPOSES

LABORATORY	DETERMINATIONS EVALUATED FOR CONTROL PURPOSES	
	March Thro gh August 1953	September 1953 Through March 1954
Y 12 Site		
Raw Materials	585	254
HRP	330	647
ANP	194	583
Total	1109	1484
X 10 Site		
Building 3019	1152	418
Building 3508	66	164
Building 4500	1322	1003
Total	2540	1585
GRAND TOTAL	3649	3069

SERVICE ANALYSES

A semiannual summary of the analytical service work at the Y 12 site is given in Table 12

ANP ANALYTICAL CHEMISTRY

J C White — A F Roemer Jr
L J Brady — C R Williams

The service work of the ANP Analytical Chemistry Laboratory has consisted for the most part of the analysis of fluoride type reactor fuels and of alkali metal fluorides The elements usually determined were sodium uranium zirconium nickel iron chromium and fluorine An increasing number of samples was received that required the determination of total reducing power UF_3 and oxidation states of the corrosion products iron nickel and chromium An account of the work of this laboratory is given elsewhere [1 2]

HRP ANALYTICAL CHEMISTRY

J R Lund — C K Talbott
O Menis — T C Rains

The HRP Analytical Laboratory made 14 140 determinations on 2 122 samples The variety of

[1] J C White A F Roemer Jr and C R Williams Summary of Service Chemical Analyses *ANP Quar Prog Rep Dec 10 1953* ORNL 1649 p 112

[2] J C White A F Roemer Jr L J Brady and C R Williams Summary of Service Chemical Analyses *ANP Quar Prog Rep March 10 1954* ORNL 1692 p 112

TABLE 12 SUMMARY OF ANALYTICAL SERVICE WORK AT Y 12 SITE

	NUMBER OF PERSONNEL		ORNL DIVISIONS REQUESTING ANALYSES					OTHERS REQUESTING ANALYSES			
	TECHNICAL	NONTECHNICAL	MATERIALS CHEMISTRY	ANP	ELECTROMAGNETIC	ISOTOPE RESEARCH AND DEVELOPMENT	REED	ADP	Y 12 STORES	MISCELLANEOUS	TOTAL DETERMINATIONS
LABORATORY MAKING ANALYSES			NUMBER OF DETERMINATIONS								
HRP Analytical	6	6					13 716			424	14 140
ANP Analytical	2	9	8 018	5323							13 341
Raw Materials	1	9	11 668						602		12 270
Miscellaneous Analyses	2	3	6 708	421	18	18	150	160	12	120	7 607
TOTAL	11	27	26 394	5744	18	18	13 866	160	614	544	47 358

materials and of types of analyses represented by this work is significant Sample types have included solutions of uranyl sulfate uranyl fluoride uranyl sulfate and copper sulfate aluminum nitrate thorium nitrate lithium and sodium chlorides lithium and sodium iodides hydrogen peroxide nitric acid phosphoric acid formic acid sulfurous acid and PDA and slurries of uranium and thorium compounds Analyses were made for many elements for nitrate sulfate phosphate water acid molarity pH and conductivity

In addition to the analyses listed samples of air argon helium thorium oxide slurries water 5% nitric acid and uranyl sulfate and uranyl fluoride solutions were analyzed for total gas oxygen carbon dioxide hydrogen and residual gas

The films on a number of platinum pins from Homogeneous Reactor test loops that contained milligram quantities of deposited oxide were analyzed for iron chromium nickel and uranium Uranium determinations were also made on the oxide films of a number of type 347 stainless steel specimens The films which contained 1 to 2 mg of uranium were removed by boiling the specimens in aqua regia to loosen and separate them from the rest of the metal The uranium separated from other constituents was determined fluorometrically

A complete analysis was made of both the corroded and uncorroded portions of a Stellite alloy that was covered with a few hundred milligrams of corroded material Volumetric and colorimetric methods were used to determine chromium nickel silicon and iron

Materials used in the preparation of thorium slurries that is thorium formate thorium acetylacetonate and thorium phosphate were analyzed for purity In the case of thorium phosphate the compound was difficult to dissolve and required a double fusion with sodium carbonate The phosphate was leached with dilute acid and the oxide was dissolved in perchloric acid In addition to thorium nitrate and water of crystallization were determined in these compounds

Iodide and iodine present in a nitrobenzene solution were determined by the oxidation of iodide to iodine with sodium nitrite followed by a determination of the total iodine [3] It was found that nitrobenzene does not interfere in this procedure

[3] I M Kolthoff and E B Sandell *Textbook of Quantitative Inorganic Analysis* 3d ed p 600 Macmillan New York 1952

RAW MATERIALS CHEMISTRY

J C White W F Vaughan
L J Brady P V Hoffman

Approximately 2800 samples were tested for the Raw Materials Group of the Materials Chemistry Division These samples were submitted in connection with the solvent extraction program in order to determine the efficiency of long chain aliphatic amines in organic diluents as extractants for uranium from raw materials In addition to the colorimetric and fluorometric determinations of uranium many samples were analyzed for aluminum iron vanadium magnesium molybdenum phosphate chloride and sulfate The purity of a number of the amines was determined by microchemical methods

It was found possible to replace to a large extent the diethyl ether–1 ascorbic acid method for uranium by the stannous chloride–ammonium thiocyanate method [4] Most of the current samples contain less than 2 mg of iron the maximum amount of iron tolerable in the thiocyanate method for uranium Vanadium interferes in this method hence for those samples that contain vanadium and iron (>2 mg) the diethyl ether extraction step is used with the thiocyante procedure

MISCELLANEOUS ANALYSES

J C White W F Vaughan
L J Brady W J Ross

A total of 687 samples was analyzed by the Miscellaneous Analyses Laboratory during the period included were samples of lubricants from the Y 12 Stores Department for specification testing and also samples of steam condensate from the same source

Among the more unusual samples that were analyzed were specimens of Boral which consisted of boron carbide and aluminum binder clad with aluminum The boron content per square centimeter of surface was determined by dissolving the aluminum metal from the sandwich with hydrochloric acid and determining boron in the residue The loss of boron carbide through dissolution in acid was negligible except when there had been several hours of

[4] M T Kelley *et al* Uranium–Ammonium Thiocyanate Spectrophotometric Method Method No 13 in *Manual of Analytical Procedures for the U^{235} Recovery Process* ORNL 983 (Aug 20 1951)

[redacted]

contact Samples of a fluorocarbon solution of an organic coating material were analyzed for carbon hydrogen and chlorine The identity of a number of furfural derivatives was established by elemental analysis The identity of thorium acetylacetonate was also established The chromium nickel cobalt and tungsten contents of a number of Stellite alloys were determined One pound of high purity uranium tetrabromide was prepared by the method of Powell [5] The feasibility of determining uranium hexafluoride in concentrations of the order of 10 ppm by volume in hydrogen fluoride or hydrogen gas streams by ultraviolet absorption measurement was investigated for the Y 12 Engineering Group A literature search revealed that Haendler[6] had demonstrated that by use of a nickel cell having quartz windows and a 10 cm light path length a decrease of 1% in transmittancy at 2700 Å corresponded to about 28 ppm of UF_6 by volume and that at a wavelength of 2500 Å the sensitivity increased tenfold Before a routine monitoring system can be established accurate transmittancy measurements are required in order to calculate the extinction coefficient A Monel metal cell with calcium fluoride windows is now being fabricated for this purpose

[5] J Powell Preparation of Pure Bromides *Ames Project Report for Period July 10 to August 10 1944* CC 1781 p 7

[6] H M Haendler *Progress Report* NYO 3534 (Aug 1 1953) p 16

[redacted]