Temple Love Cy. 360

CENTRAL RESEARCH LIBRARY
DOCUMENT COLLECTION

MARTIN MARIETTA ENERGY SYSTEMS LIBRARIES

3 4456 0353187 2

ORNL 1470
Instrumentation

PRECISION SINGLE-CHANNEL ANALYZER

Model No. 5 - Q-1192

CENTRAL RESEARCH LIBRARY
DOCUMENT COLLECTION
LIBRARY LOAN COPY
DO NOT TRANSFER TO ANOTHER PERSON
If you wish someone else to see this document, send in name with document and the library will arrange a loan.

OAK RIDGE NATIONAL LABORATORY
OPERATED BY
CARBIDE AND CARBON CHEMICALS COMPANY
A DIVISION OF UNION CARBIDE AND CARBON CORPORATION
UCC
POST OFFICE BOX P
OAK RIDGE, TENNESSEE

ORNL 1470
This document consists of 13 pages.
Copy 32 of 50 copies. Series B.

Contract No. W-7405, eng. 26

PHYSICS DIVISION

PRECISION SINGLE-CHANNEL ANALYZER

Model No. 5 - Q-1192

J. E. Francis and P. R. Bell

Date Issued

NOV 4 1954

OAK RIDGE NATIONAL LABORATORY
operated by
CARBIDE AND CARBON CHEMICALS COMPANY
A Division of Union Carbide and Carbon Corporation
Post Office Box P
Oak Ridge, Tennessee

MARTIN MARIETTA ENERGY SYSTEMS LIBRARIES
3 4456 0353187 2

ORNL 1470
Instrumentation
Series B

Distribution

1-50. Laboratory Records Dept.

PRECISION SINGLE-CHANNEL ANALYZER

Model No. 5 - Q-1192

J. E. Francis and P. R. Bell
Oak Ridge National Laboratory
Oak Ridge, Tennessee

A new analyzer has been designed to measure the energy spectrum from scintillation counters. It gives an output pulse when, and only when, the input pulse amplitude is between E and E + ΔE. The "window width" (ΔE) is constant within ± 1% for all values of E between zero and eighty volts. Any value of "window width" between zero and five volts can be obtained. It has the advantages of working on faster pulses and using fewer tubes than the preceding model.[1]

Block Diagram

Fig. 1 is a block diagram of the analyzer. The analyzer contains a pulse-height-selecting feedback amplifier (generally called a "window" amplifier) followed by two pulse height selectors, a memory circuit, and an anti-coincidence circuit.

The "window" amplifier amplifies a segment of the pulse distribution as shown in Fig. 2. A helipot at the beginning of the amplifier determines which segment is amplified, and thus sets the minimum value that a pulse must have to give an output signal.

---

1. J. E. Francis, P. R. Bell, J. C. Gundlach, Rev. Sci. Inst. 22, 103 (1951).

UNCLASSIFIED
DWG. 8638

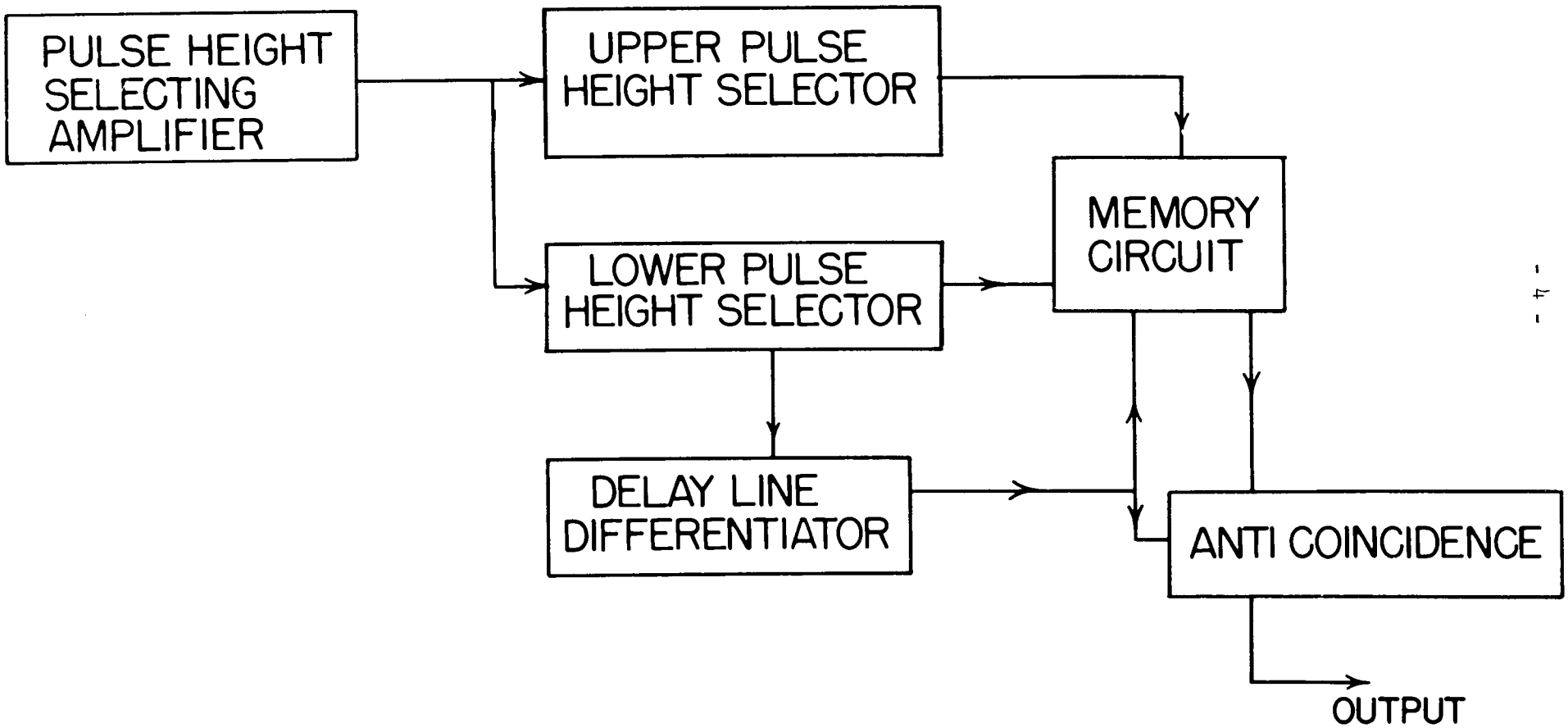

FIG. 1 - BLOCK DIAGRAM OF ANALYZER.

UNCLASSIFIED
DWG. 8887

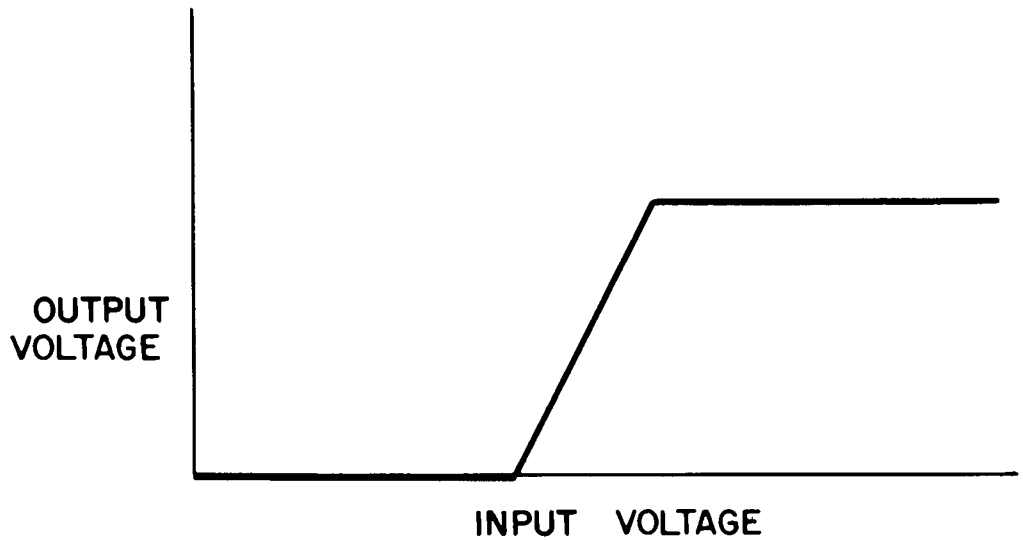

FIG. 2 - INPUT VOLTAGE VS. OUTPUT VOLTAGE OF THE PULSE-HEIGHT-SELECTING AMPLIFIER.

The lower pulse height selector is biased to trigger on small pulses from the amplifier. Two output signals are taken from this pulse-height selector. One is used to turn on the memory circuit. The other is differentiated by a shorted delay line to produce two pulses. The pulse marking the end of the input pulse to the lower selector is used to hold on the memory circuit and is also fed to one grid of the anti-coincidence tube.

The upper pulse-height selector is triggered only if the output pulse from the window amplifier is above a certain value, determined by the ΔE helipot. The output pulse from this selector is fed to the memory circuit. The difference between the size of the pulse which triggers the lower pulse-height selector and the size of the pulse which triggers the upper pulse-height selector determines ΔE or the "window width".

The memory circuit provides an input pulse to the anti-coincidence circuit only when the upper pulse-height selector is triggered. When only the lower selector is triggered, there is no coincidence; therefore, there is an output pulse.

Circuit

Fig. 3 is a circuit diagram of the analyzer. Tube V-1 is a cathode follower whose grid bias can be adjusted over a range of eighty volts by means of a 50,000 ohm helipot (R-3). Thus the dc level of a pulse as seen at the cathode of V-1 can be adjusted over a range of eighty volts. V-1 draws current at all times and operates in a linear manner. The pulses on the cathode of V-1 will be identical to the input pulses when viewed on an oscilloscope. The grid of V-3 is coupled to the cathode of V-1 by means of a current limiting resistor R-11; normally this holds V-3 beyond cutoff.

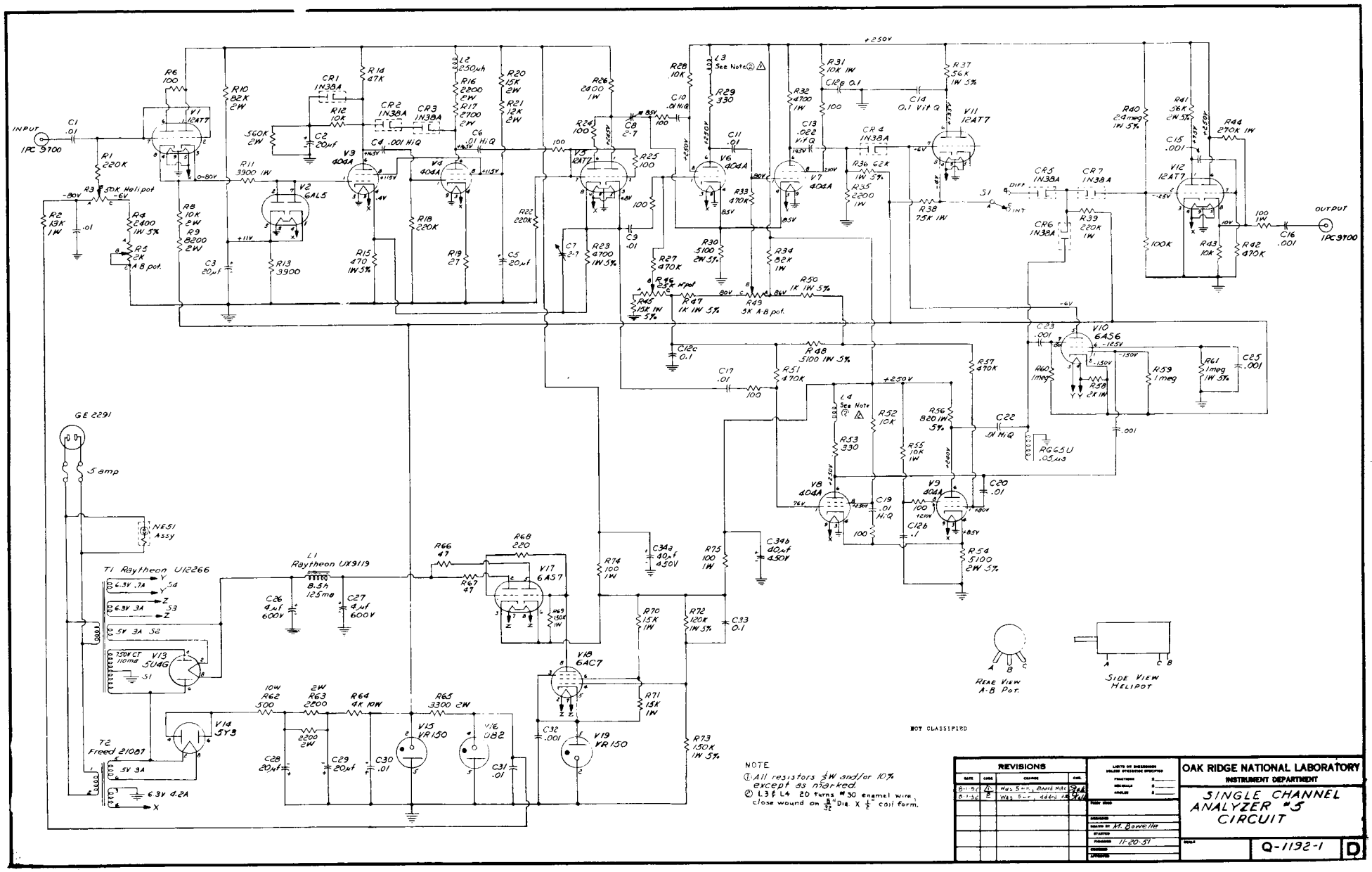

FIG. 3 - CIRCUIT DIAGRAM OF ANALYZER.

An input pulse must be larger than a certain amount (determined by the bias on V-1) before V-3 gives an output pulse. Tube V-3 is prevented from drawing grid current by the diode V-2 which starts to conduct when the grid voltage of V-3 exceeds a fixed value.

The output signal of V-3 is limited by a crystal diode (CR-1) so that the grid of V-4 will not be driven very far negative and the tube will recover quickly after a large pulse.

Tubes V-3, V-4, V-5 and associated components comprise a conventional feedback amplifier with a gain of ten. Western Electric 404A's were chosen because of the extreme speed required of the window amplifier. The speed is required when the amplifier is amplifying only the top few percent of a large pulse. Then the output pulse will have not only the frequency components of the input pulse but components of much higher frequency. To be perfect an infinite bandwidth is required.

The two crystal diodes (CR-2 and CR-3) (called an "amplified diode") improve the sharp cutoff characteristics of the amplifier by preventing an output signal until V-3 is drawing one and one-half milliamperes and is on the linear portion of its characteristic. The diodes also help to suppress any signals which might come from the grid to cathode capacity of V-3.

The signal from the window amplifier is fed to the two pulse height selectors. The lower pulse height selector (V-8, V-9) has a fixed bias. It is biased to trigger on small pulses from the amplifier just slightly larger than the capacity feed-through pulses where the window amplifier output is linear. Normally V-8 is biased off. When a positive pulse from the window amplifier exceeds the cutoff bias a negative pulse is obtained at the

plate of V-8 and fed to the grid of V-9. This turns V-9 off and the current flowing through the common cathode resistor R-54 is transferred from V-9 to V-8. The negative pulse from V-8 is also fed to one of the grids of V-10 to unclamp the memory circuit. The positive pulse from the plate of V-9 is differentiated by a shorted delay line to obtain two pulses, a positive pulse marking the beginning of the input pulse and a negative pulse marking the end of the input pulse. No use is made of the positive pulse. The negative pulse is fed into the second grid of V-10 to keep the memory circuit unclamped for an additional 0.1 μs. The differentiated pulse is also fed to the anti-coincidence circuit.

The anti-coincidence circuit (CR-5, CR-6, and CR-7) normally has current flowing from - 150 volts through R-39, CR-6 and the delay line to ground. When the negative pulse from V-9 occurs it causes less current to flow through the junction point giving a negative pulse which is lengthened by CR-7 and fed to the grid of V-12a where it is inverted and amplified. It is then fed to V-12b, operated as a cathode follower, to give an output pulse.

The upper pulse height selector triggers only if the pulse from the window amplifier is above a value determined by the bias on V-6 which is controlled by the ΔE helipot (R-46). The output pulse from V-7 is fed into the memory circuit.

The memory circuit (CR-4, V-11, CR-5, V-10) controls one input of the anti-coincidence circuit. Normally, when there is no input pulse to the circuit, the plate of CR-5 is held at minus four volts by the cathode of V-11. When a pulse from the lower pulse height selector turns off V-10 the grid of V-11 is left floating and stays at approximately the same

potential. If, however, the upper pulse height selector is triggered, a positive pulse from the plate of V-10 is placed on the grid of V-11 through the crystal diode CR-4 which pulls up the cathode of V-11 and the plate of the crystal diode CR-5. The current in the anti-coincidence circuit now flows through the crystal diode CR-5 instead of CR-6 which prevents the anti-coincidence circuit from giving an output pulse. When there is no longer a pulse on the grid of V-10 the memory circuit is reset by current flowing through V-10 pulling the grid of V-11 down to its quiescent voltage. The finite rise and fall time of the input pulse creates the need for a memory circuit.

Adjustments

The analyzer is adjusted by using a signal generator and an A-1 amplifier to provide a test signal into the analyzer and a scaler to measure the output.

To set the analyzer "zero", find the value of the E dial setting for several different signal heights such that the lower pulse height selector just triggers and plot E dial versus signal height. Adjust R-5 until the plot of E dial versus signal height passes through zero.

The ΔE "zero" is adjusted so that both pulse height selectors trigger on the same size pulse when the ΔE dial is set at zero. This can be accomplished in two ways. The first is to put a test pulse into the analyzer and adjust the E dial until the lower selector just triggers. Then adjust R-49 until the upper pulse height selector just triggers also. The second method is to adjust the E dial so that the analyzer is counting the noise pulses from the A-1. Then adjust R-49 so that there are very few or no output pulses when the ΔE dial is set at zero.

The paraphase signal capacity C-8 is adjusted by using a test signal which will not quite make the upper pulse-height selector trigger when the ΔE dial is set at its maximum value. The condenser is then adjusted to obtain the minimum signal on the plate of V-7. The minimum signal usually occurs at the minimum capacity of the condenser.

Test for Window Width being Constant

The window width is checked by putting in a signal of fixed height then finding the E dial settings for the edge of the upper and lower pulse height selectors. The difference in the readings gives the "window width". This should be done for several different pulse amplitudes. The edge of the window is defined as the E dial position at which a scaler counts at one-half of the repetition rate of the pulse generator. It is best to use a low gain (two or four) setting on the amplifier as there is less noise at low settings and the edge of the window appears sharper. The trimmer condenser (C-7) determines the high frequency gain of the window amplifier and therefore affects the window width. To find the correct setting for this condenser (C-7) measure the window width for a small input signal. Then change to a large input signal and measure the window width again. Adjust trimmer condenser (C-7) until both are the same. Recheck for constant window width. These measurements should be made with the A1 amplifier producing the fastest pulses that the analyzer is expected to analyze, i.e. the two megacycle bandwidth using RC shaped pulses. The "window width" will then be constant for the slower pulses also.

General Comments

Operational failures, so far as is known, have been limited to tube failures. The failures thus far reported have been characterized by large erratic shifts in the E zero or the "window width". It appears on the data as shifts in the peak position and changes in the counting rates. These same symptoms can be due to other causes in the equipment also. However, the analyzer can be quickly checked to see if it is at fault.

To check for E zero drift remove high voltage from the photomultiplier and see if the noise of the A1 amplifier appears at approximately the same value as previous to suspected trouble or put in a signal of known height. Noise should count at approximately ten divisions on the E dial with amplifier on gain two, wide bandwidth. If this value is not known or is in doubt, measure for voltage across the grid resistor R-1. Voltage usually indicates a gassy 12AT7 (V-1).

For drifts in "window width", measure for voltage across the following grid resistors: R-18 (V-4), R-27 (V-6), R-34 (V-7), R-51 (V-8), and R-57 (V-9). For tubes V-6 and V-8 this voltage will appear as positive on the grid side of the resistor contrary to usual grid current. Any voltage across the grid resistor usually indicates a poor tube.

Energy calibrations are made using a radioactive source that emits gamma rays of known energy, so that the E dial is calibrated in terms of kev or Mev rather than volts when measured with a scintillation spectrometer. It should be noted that the output of the analyzer is really the number of

counts between E and E + ΔE. Usually this number is plotted at E dial setting instead of E + 1/2 ΔE as it should be. This does not cause any trouble unless the gain of the amplifier is changed during an experiment. If the gain is changed by a factor of two it causes an apparent shift in the E zero of 1/2 ΔE unless taken into account.

The gain of the Al amplifier should be adjusted so that the entire spectrum falls within the eighty volt range to eliminate the possibility of overloading the amplifier. If it is desirable to look at only the lower part of a spectrum the gain of the amplifier can be increased somewhat. However, the largest pulses should not overload the Al by more than a factor of two or three, because larger overload pulses cause a shift in the base-line. Operation of the A-1 on gain two using a delay line differentiated should be avoided because large pulses may overload the preamp.

For a more complete discussion of the electronic design problems of analyzers, both single-channel and multi-channel, the series of articles by Van Rennes in Nucleonics is recommended.[2]

The authors wish to thank W. H. Jordan for his helpful comments and suggestions on this report.

---

2. A. B. Van Rennes, Pulse Amplitude Analysis in Nuclear Research, Nucleonics, 10, July, 1952.