CENTRAL RESEARCH LIBRARY
DOCUMENT COLLECTION

ORNL 1445
Chemistry

Cy. 5

MARTIN MARIETTA ENERGY SYSTEMS LIBRARIES
3 4456 0360639 1

AN IMPROVED FLUOROPHOTOMETER FOR DETERMINATION OF URANIUM IN FUSED SODIUM FLUORIDE PELLETS

M. T. Kelley
H. L. Hemphill
D. M. Collier

CENTRAL RESEARCH LIBRARY
DOCUMENT COLLECTION

LIBRARY LOAN COPY

DO NOT TRANSFER TO ANOTHER PERSON

If you wish someone else to see this document, send in name with document and the library will arrange a loan.

OAK RIDGE NATIONAL LABORATORY
OPERATED BY
CARBIDE AND CARBON CHEMICALS COMPANY
A DIVISION OF UNION CARBIDE AND CARBON CORPORATION

UCC

POST OFFICE BOX P
OAK RIDGE, TENNESSEE

ORNL 1445

Copy No. 5

Contract No. W-7405-eng-26

ANALYTICAL CHEMISTRY DIVISION

M. T. Kelley, Director
C. D. Susano, Associate Director

AN IMPROVED FLUOROPHOTOMETER FOR DETERMINATION OF URANIUM IN FUSED SODIUM FLUORIDE PELLETS

M. T. Kelley H. L. Hemphill
D. M. Collier*

DATE ISSUED

JAN 27 1954

OAK RIDGE NATIONAL LABORATORY
Operated by
CARBIDE AND CARBON CHEMICALS COMPANY
A Division of Union Carbide and Carbon Corporation
Post Office Box P
Oak Ridge, Tennessee

*Instrumentation and Controls Division

MARTIN MARIETTA ENERGY SYSTEMS LIBRARIES

3 4456 0360639 1

INTERNAL DISTRIBUTION

1. C. E. Center
2. Biology Library
3. Health Physics Library
4-5. Central Research Library
6. Reactor Experimental Engineering Library
7-11. Laboratory Records Department
12. Laboratory Records, ORNL R.C.
13. C. E. Larson
14. L. B. Emlet (K-25)
15. J. P. Murray (Y-12)
16. A. M. Weinberg
17. E. H. Taylor
18. E. D. Shipley
19. F. C. VonderLage
20. M. T. Kelley
21. C. P. Keim
22. J. H. Frye, Jr.
23. R. C. Briant
24. J. A. Swartout
25. F. L. Culler
26. S. C. Lind
27. A. H. Snell
28. A. Hollaender
29. G. H. Clewett
30. K. Z. Morgan
31. T. A. Lincoln
32. A. S. Householder
33. R. S. Livingston
34. D. S. Billington
35. C. E. Winters
36. D. W. Cardwell
37. E. M. King
38. D. D. Cowen
39. J. A. Lane
40. H. L. Hemphill
41. D. M. Collier
42. M. J. Skinner

EXTERNAL DISTRIBUTION

43. R. F. Bacher, California Institute of Technology
44-290. Given distribution as shown in TID-4500 under Chemistry Category

DISTRIBUTION PAGE TO BE REMOVED IF REPORT IS GIVEN PUBLIC DISTRIBUTION

CONTENTS

	Page
Abstract	vi
Introduction	1
Summary	1
Description of the Instrument	3
The Optical Unit	4
The Electronic Unit	8
Operation of the Instrument	11
Acknowledgment	14
Bibliography	15

FIGURES

Figure No.	Title
1	Photograph of the Model Q-1165 Fluorophotometer
2	Diagram of the Optical System of the Model Q-1165 Fluorophotometer
3	Circuit Diagram of the Model Q-1165 Fluorophotometer

ABSTRACT

An improved fluorophotometer for the measurement of the fluorescence of fused sodium fluoride pellets that contain uranium is described. This instrument consists of a compact optical system that requires no critical adjustments, a highly stable power supply for the photomultiplier tube, and a stable amplifier, which permits the use of a rugged meter for indicating the photocurrent. The instrument has a wide sensitivity range.

INTRODUCTION

No commercially available fluorophotometer is suited to the measurement of the fluorescence of fused beads or pellets, such as are commonly used for the determination of small amounts of uranium. A number of fluorophotometers, designed for this purpose, have been described in the literature of Atomic Energy Commission projects.[1-9] It was felt that none of these is fully satisfactory for use at the Oak Ridge National Laboratory; hence, a new instrument was built that incorporates the best design features of several other instruments.[2,7,9]

SUMMARY

The new fluorophotometer for the measurement of the fluorescence of fused sodium fluoride pellets has the following characteristics:

1. A simple and compact optical system that uses neither mirrors nor lenses and therefore requires no critical adjustments;
2. A simple sample-changing mechanism that has a positive-acting sample-positioning device and that prevents exposure of the phototube to external light;
3. A sensitive photomultiplier, which makes possible the measurement of low-intensity fluorescence;
4. A vacuum-tube voltmeter that indicates the photocurrent by means of a rugged microammeter rather than a galvanometer;
5. A stable power supply, which minimizes the effect of line-voltage fluctuation;

6. A sensitivity that covers the entire range over which the fluorescence of a sodium fluoride phosphor pellet is a linear (logarithmic) function of uranium concentration, that is, 10^{-9} to 10^{-5} grams of uranium per pellet;

7. Scale factors that are integral multiples of one another, thus making possible rapid calculation of results;

8. Dark-current compensation that does not change when the fine-sensitivity scale is changed.

Because of the high sensitivity of the photomultiplier tube, a very small quantity of sample is sufficient to give a reliable reading; therefore it is possible to analyze highly radioactive materials.

The photomultiplier tube, in addition to having high sensitivity, has an inherently low dark current. Special cooling provisions to reduce the dark current, thus increasing the signal-to-noise ratio, are therefore unnecessary. The only provisions for cooling consist of radiating fins on the phototube housing and of blowers on the untraviolet-lamp housings. These serve to keep the temperature of the photomultiplier very close to ambient temperature. The dark current is more dependent upon light leakage and upon the possible presence of foreign fluorescent material in the sample compartment than upon room-temperature fluctuations, provided that these fluctuations are not extremely large.

Fifteen instruments of the improved design have been subjected to prolonged tests with uranium-glass samples. The results of these tests show that after a suitable warm-up period, a properly adjusted instrument gives readings that are, insofar as is discernible, exactly reproduced over a one-hour period. With no readjustment of the instrument, the readings are reproduced within 1 % (max.) after an eight-hour period of operation in air-conditioned surroundings. After proper adjustment of the sensitivity, dark-current, and zero settings, the readings are reproducible within 0.5 % (max.) throughout a week of continual operation. When these percentages are exceeded, faulty operation of some component of the instrument is indicated. The faulty component should then be replaced.

The precision obtainable with the new fluorophotometer is indicated by the following data taken on fused sodium fluoride pellets that contained the indicated amounts of uranium:

Uranium in Pellet, g	Precision Expressed as Relative Std. Error ±%* (95% Confidence Level)
10^{-9}	40
10^{-8}	13
10^{-7}	12

*N always greater than 100 and each n the average of measurements on three pellets.

DESCRIPTION OF THE INSTRUMENT

The ORNL model Q-1165 fluorophotometer is an instrument of new design and embodies some features of the model R fluorophotometer[2] as well

as some features of the instrument designed by Pickle.[7] It consists of two units, the optical unit and the electronic unit, each housed separately as shown in Fig. 1. The constant-voltage transformer for the instrument and the ballast transformers, one for each of the two mercury-arc lamps, are not included in the figure.

The Optical Unit

The optical unit contains an ultraviolet light source, cooling blowers, optical filters, a photomultiplier tube for measuring the intensity of the fluorescent light, a sample carrier, and appropriate shields and housings for these. The geometry of these components has been simplified, as shown in Fig. 2, in order to obviate the necessity of lenses or reflectors. This arrangement improves the efficiency of the light system and makes the alignment of the parts less critical. The distance between each ultraviolet lamp and the sample phosphor is 3 13/16 inches, and between the phototube window and the sample phosphor, 1 9/16 inches. The proximity of these components is made possible by the efficient removal of heat from the ultraviolet lamps by the blower system; thus excessive heating of the photomultiplier tube, with consequent change in the sensitivity and dark current, is avoided.

The ultraviolet light source consists of two General Electric type A-H4 mercury-vapor lamps, each operated from a General Electric 89G182 ballast transformer. Each lamp housing has double-wall construction of thin aluminum tubing. The housing is equipped on one end with brackets for mounting the lamp socket and for centering the light source, and on the other end with an exhaust blower for heat removal. Visible light is

Unclassified
Photo 8771

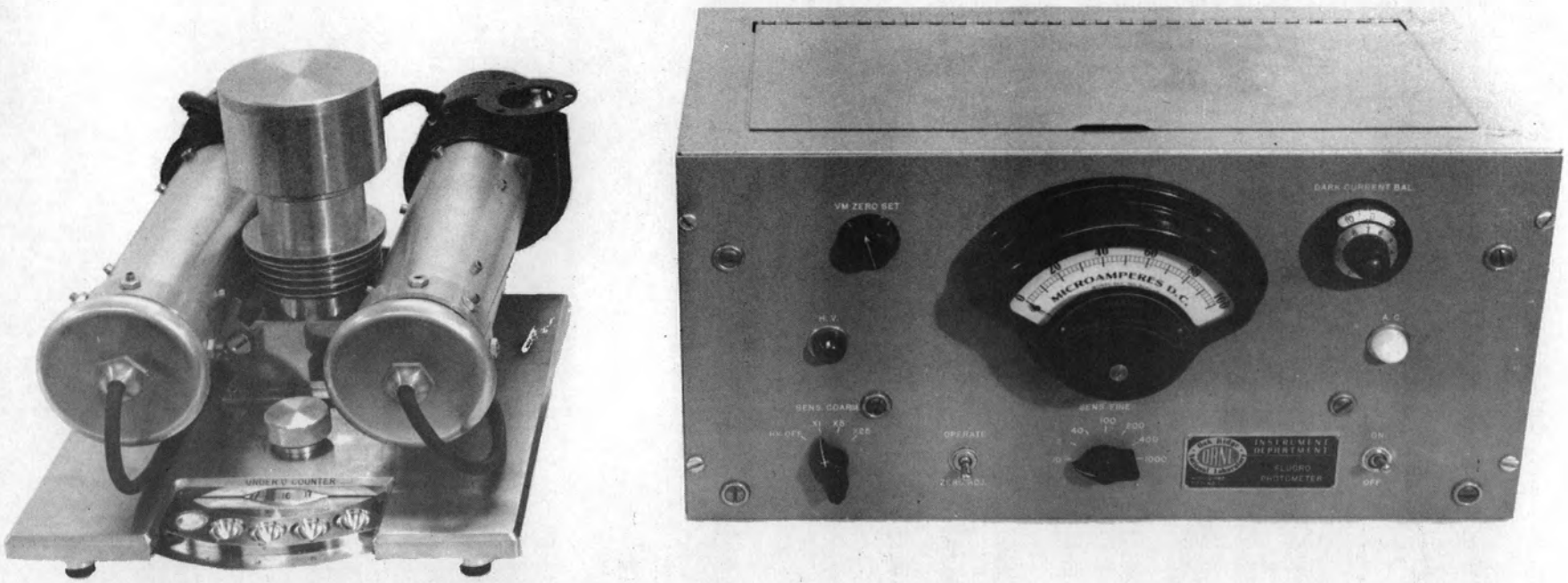

Fig. 1. Model Q-1165 Fluorophotometer.

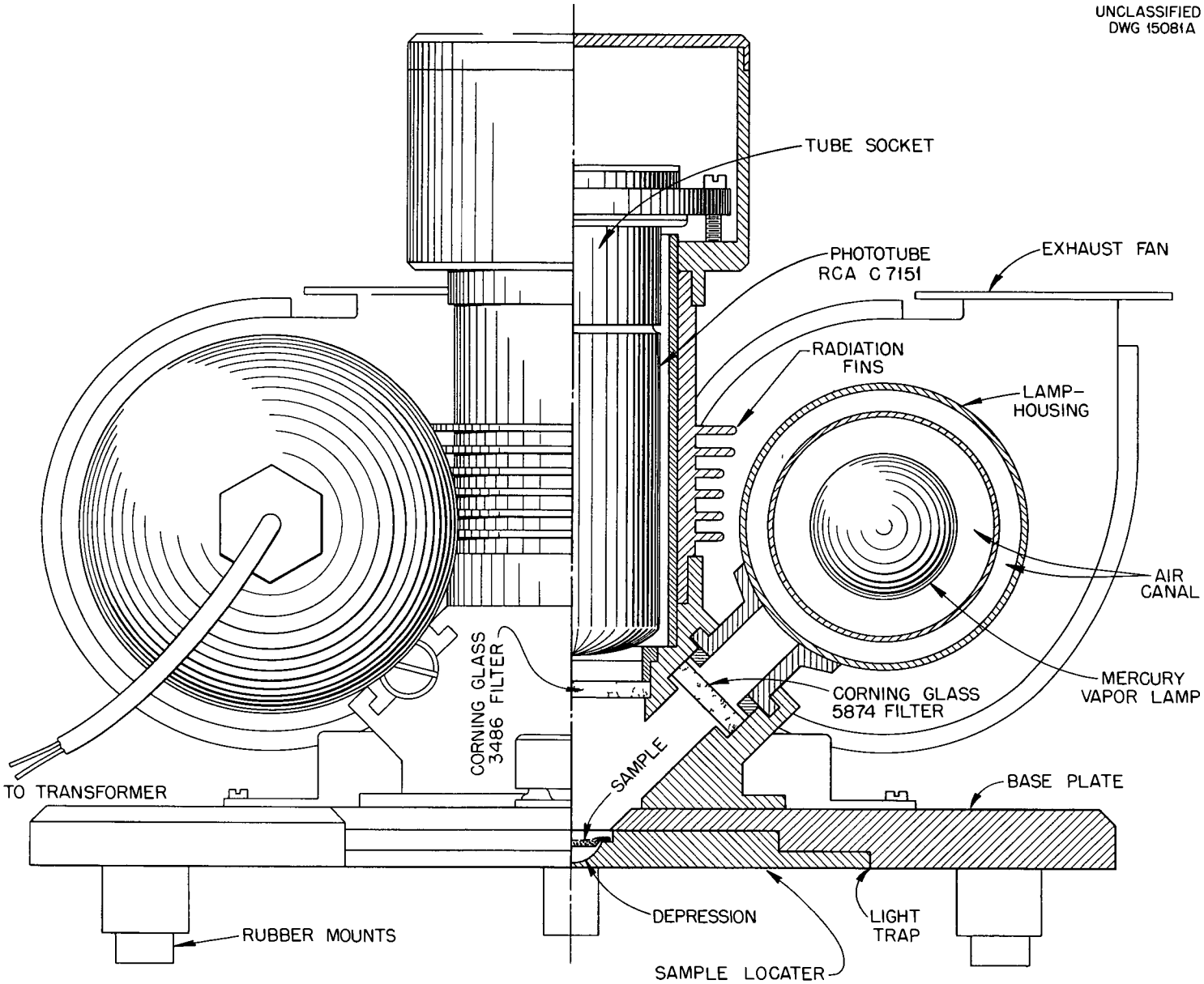

FIGURE 2

DIAGRAM OF THE OPTICAL SYSTEM OF THE MODEL Q-1165 FLUOROPHOTOMETER

removed from the excitation light by a Corning No. 5860 ultraviolet-pass filter located between each lamp and the phosphor. The sample surface is thus irradiated only with ultraviolet light of about 3600 Å wavelength that is beamed onto the sample at an angle of 45° from the vertical. The use of two lamps makes the illumination of the sample more nearly uniform, greatly reducing the effect of sample orientation.

The photomultiplier tube is mounted vertically in an aluminum housing located between the two lamp housings and directly above the sample position. Fluorescent light emitted from the sample passes through a Corning No. 3484 glass filter, which excludes light of wavelength shorter than 5200 Å. The light then strikes the photosensitive surface of the electron-multiplier tube, which is a type 6199 tube that has end-window construction and ten stages of electron multiplication. The photocathode emits an electron current the amplitude of which is directly proportional to the intensity of the incident light; this current is amplified by the ten stages of electron multiplication and fed into the electronic unit. The use of this tube, which has a large photocathode (1.2 sq. in.), makes possible a considerable increase in sensitivity over that attainable with the 1P21 type previously used. As is the case for any electron-multiplier tube, the performance of the 6199 tube is affected by magnetic fields; for this reason, a Mu-metal shield is enclosed within the housing to protect the tube from stray magnetic fields. Furthermore, as the temperature of the tube is increased, the dark current, that is, the current from the photomultiplier when no sample phosphor is present becomes larger as a result of increased

thermionic emission from the photocathode. Such a dark-current change is not easily distinguishable from the current that is to be measured. Therefore the tube housing has external radiating fins which, together with the lamp blowers, maintain the temperature of the optical unit very close to ambient temperature. The dark current of the 6199 tube at room temperature is satisfactorily low and can be readily balanced out.

The sample carrier is a circular stainless-steel plate, mounted on a spring-loaded pivot bearing in the base of the optical unit. Near the circumference of the top of the carrier are depressions designed to accommodate as many as twenty-four plates that contain sample phosphors. The sample is rotated into position under the photomultiplier tube for reading, and an indexing system identifies the sample position being measured. The labyrinthine design of the sample wheel reduces leakage of extraneous light to a low level; therefore the high voltage to the photomultiplier tube need not be interrupted while samples are being changed. Samples are held in position under the photomultiplier tube by a spring-loaded roller that snaps into a groove on the underside of the sample wheel when the positioning is correct. This positive method of positioning reduces the possibility of error and is a decided advantage in operation.

The Electronic Unit

The electronic unit contains a vacuum-tube voltmeter (VTVM), which indicates the photomultiplier current on a panel-mounted microammeter, and an electronically regulated d-c power supply, which provides voltage for

both the VTVM circuit and the photomultiplier tube. The circuit diagram of the electronic unit is shown in Fig. 3.

The sensitivity of the instrument may be changed by either of two selector switches, one of which (the "coarse-sensitivity" selector) changes the voltage that is applied to the photomultiplier tube, and the other (the "fine-sensitivity" selector) changes the current sensitivity of the VTVM circuit. The photomultiplier tube generates a current the magnitude of which is proportional to the intensity of the light incident upon the photocathode. The proportionality constant depends upon the voltage applied to the stages of electron multiplication; therefore changing this voltage changes the current gain of the photomultiplier tube. The coarse-sensitivity switch, which has three voltage positions, is used to select individual potentiometers with which the voltages can be adjusted to give sensitivity ratios of precisely 1, 5, and 25. Because the VTVM normally measures voltage, a resistor must be placed in series with the output current of the photomultiplier tube in order to cause a meter deflection. The larger the resistor, the greater the meter reading for a given photomultiplier-tube current. The range of settings for the fine-sensitivity selector switch is determined by the value of the VTVM grid resistor. Precision resistors are used so that the photomultiplier-tube current gives full-scale readings on the panel meter for exact current ratios of 10, 20, 40, 100, 200, 400, and 1000. These ratios may be read directly from the meter face, which has three scales. Thus with the coarse-sensitivity switch in the X1 position and the fine-sensitivity switch in the "10" position, the meter reads a full-scale current ratio of ten , relative to some desired level of sensitivity that may be set by the voltage adjustment. The "dark-

UNCLASSIFIED
DWG 21884

FIGURE 3

CIRCUIT DIAGRAM OF THE MODEL Q-1165 FLUOROPHOTOMETER

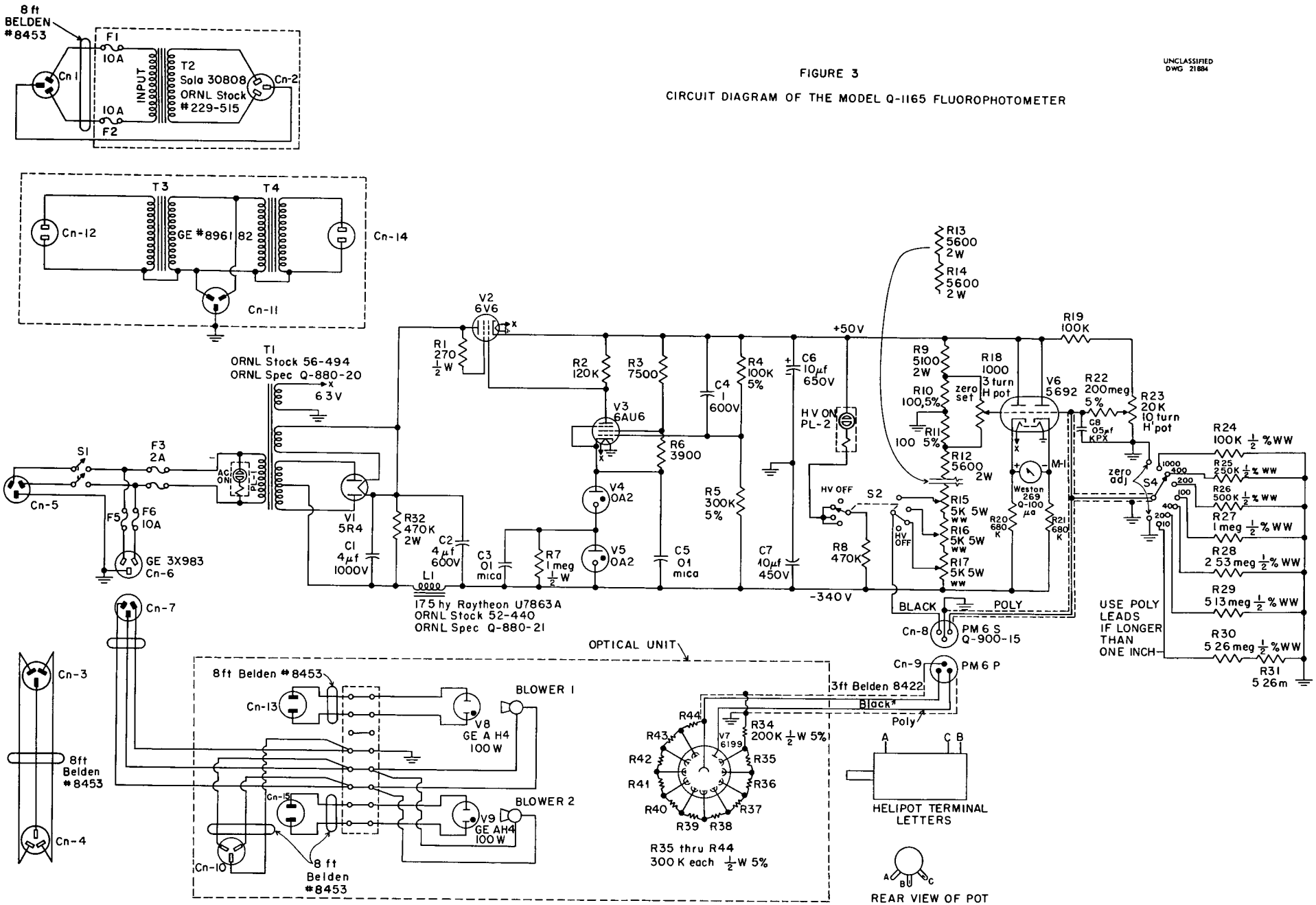

current-balance" adjustment cancels any photomultiplier-tube current present when there is a blank phosphor or no sample in the reading position. This dark current is caused largely by insulation leakage and light leakage in the optical unit, hence it changes when the coarse-sensitivity selector is changed. The method of cancellation is so chosen, however, that the adjustment does not change with different positions of the fine-sensitivity selector switch.

A constant-voltage transformer and two ballast transformers are mounted on a separate board, which may be placed under the test bench or in any convenient location. All switches are located on the panel of the electronic unit.

OPERATION OF THE INSTRUMENT

After a 30-minute warm-up period, during which time the fine-sensitivity switch should be on "zero adj." and the coarse-sensitivity switch preferably in the "HV off" position, the instrument is ready to be put into operation. In normal practice, the coarse-sensitivity switch is placed in the position that permits reading the range of uranium content most likely to be encountered; the other two voltage positions are reserved for samples outside the expected range. Then the "zero-set" correction is made; with the "zero-set" potentiometer, the meter is adjusted to read zero while the fine-sensitivity switch is in the "zero adj." position. Next, with a blank phosphor or a clean, empty sample position in the reading position and with the fine-sensitivity switch in the "10" position, the meter is again corrected to give a zero reading by adjusting the dark-current-balance potentiometer. The instrument is now ready for calibration

by use of samples of known uranium content. After the calibration has been performed, unknown samples may be analyzed, and the uranium content of the samples then obtained from the calibration curve.

In order to avoid recalibration of the instrument each time a set of samples is to be analyzed, a fluorescent glass standard may be used. The glass standard may be assigned some reasonable value as a meter reading. After the zero-set and dark-current-balance corrections have been made as described above, then by adjustment of one of the three potentiometers just inside the top cover of the electronic unit (R-15, R-16, or R-17 of Fig. 3, depending upon which position of the coarse-sensitivity switch has been chosen), the meter is caused to read this preassigned value when the glass standard is measured. Because the voltage on the photomultiplier tube has been changed by any adjustment of the appropriate one of these potentiometers, it is now necessary to correct the dark-current-balance again. This correction may slightly change the reading that the glass standard gives, necessitating a minor readjustment of the voltage setting; and this readjustment may then require a further slight correction to the dark-current balance. After one or two corrections back and forth between the two potentiometers, the glass standard will read its preassigned value, and the blank determination will give a meter reading of zero. The calibration should now be made, and the unknown samples can be analyzed. For subsequent operation of the instrument, it is necessary only to make the glass standard read the preassigned value, together with proper zero-set and dark-current-balance corrections as described above. When this is

done, the original calibration is still correct and need not be repeated. The other two voltage positions of the coarse-sensitivity switch have individual adjustments, which may be set to give further sensitivity ratios of 5 and 25. To prevent damage to the meter movement, the fine-sensitivity switch should always be in the "zero adj." position when the coarse-sensitivity switch is changed or when the instrument is turned on.

If, after an extended period of operation, the sensitivity of the instrument has apparently decreased and the voltage adjustment is not sufficient to cause the glass standard to read its preassigned value, there are several possible causes, two of which are more probable than the rest. The first is that fluorescent particles have accumulated in the optical housing. This will be definitely indicated if, after a period of operation, the reading of the dial on the dark-current-balance potentiometer at proper balance is markedly lower than the dial reading obtained for proper balance when the instrument was first put into operation. The remedy is simply to clean the optical unit thoroughly, paying special attention to the sample wheel, the glass filters, the phototube housing just below the yellow filter, and the phototube. The cable from the photomultiplier-tube housing to the electronic unit should be disconnected before the optical unit is disassembled, and care should be taken to remove all fingerprints from the filters, etc., when the optical unit is reassembled. For the sake of accuracy and as a preventive-maintenance measure, the glass standard and the top surface of the sample carrier should be cleaned daily and the whole optical unit should be cleaned thoroughly every thirty to sixty days. The other probability

is that the mercury-vapor lamps are no longer as bright as they were when new. If a somewhat reduced sensitivity is not objectionable, the glass standard may simply be assigned a lower reading; another calibration should then be made, and the instrument can continue in uninterrupted operation. If the higher sensitivity is necessary, the lamps must be replaced. Fatigue or failure of the photomultiplier tube could also give this same indication, but the phototube should operate satisfactorily for about three years unless it is accidentally exposed to light while the voltage is applied. On the other hand, the mercury lamps can be expected to give satisfactory performance for only about three to six months of continual operation. Fifteen instruments operating for periods of one to two years have required only routine servicing of this nature.

ACKNOWLEDGMENT

The authors acknowledge the many valuable contributions to this work by their associates at the Oak Ridge National Laboratory, particularly by members of the Analytical Chemistry Division and of the Instrumentation and Controls Division.

They are especially indebted to D. L. Holcomb of the ORNL Research Shops for suggestions regarding the mechanical design of this fluorophotometer and for the machine work on the initial model.

BIBLIOGRAPHY

1. E. J. Center, "Topical Report on the Direct Micro Determination of Uranium Using a Modified Fluorophotometer", AECD-3006 (June 30, 1948).
2. C. F. Coleman, "Information on the Model R Fluorimeter", C-4.381.4 (March 11, 1946).
3. Private communication from L. T. Corbin to H. L. Hemphill, Nov. 1952.
4. Mary H. Fletcher, Irving May, "An Improved Fluorimeter for the Determination of Uranium in Fluoride Melts", USGS-TEI-120 (June, 1950).
5. Mary H. Fletcher, Irving May, and Joseph W. Anderson, "The Design of the Model V Transmission Fluorimeter", TEI-133 (December, 1950).
6. David Kaufman, Mario Castillo, and Urpo Koskela, "New Fluorophotometers for the Determination of Uranium, MIT Models I, II, III, and IV", MITG-A-70 (July 1, 1950).
7. C. B. Pickle, "An Improved Fluorophotometer", MonP-222 (February 17, 1947).
8. G. R. Price, "The Design and Construction of Sensitive Fluorophotometers, Part I. Principles", AECD-2677 (April, 1948).
9. George R. Price, Renato J. Ferretti, and Samuel Schwartz, M. D., "The Fluorophotometric Determination of Uranium", ANL-4002 (April, 1947).