CENTRAL RESEARCH LIBRARY
DOCUMENT COLLECTION
JAN 4 1956

MARTIN MARIETTA ENERGY SYSTEMS LIBRARIES
3 4456 0360648 0

C-34
C.R. Library

ORNL-1454
Revised

CENTRAL RESEARCH LIBRARY
DOCUMENT COLLECTION

THE PREPARATION OF REPORTS

P. M. Reyling

LIBRARY LOAN COPY

DO NOT TRANSFER TO ANOTHER PERSON

If you wish someone else to see this document, send in name with document and the library will arrange a loan.

OAK RIDGE NATIONAL LABORATORY
OPERATED BY
CARBIDE AND CARBON CHEMICALS COMPANY
UCC
POST OFFICE BOX P
OAK RIDGE, TENNESSEE

ORNL REPORT FORMAT

The format below embodies many principles common to good reporting. Use of this format will materially aid the preparation and reproduction of all reports prepared by the Laboratory.

The writing sequence suggested will reduce report preparation time for both author and editor.

This format will also aid in the retrieval of information, since it summarizes contents in such a manner that they may be easily included as part of a machine retrieval system.

This information is being distributed to fulfill some earlier requests by Laboratory personnel.

* * * * * *

FORMAT AND ORGANIZATION OF ORNL TOPICAL REPORTS, PROGRESS REPORTS, AND CF MEMOS

OUTLINE FOR TOPICAL REPORTS

Reports should be arranged as follows·

TITLE PAGE	
ABSTRACT	Except in an Unclassified CF memo, where it appears on the cover sheet.
TABLE OF CONTENTS	
SUMMARY	If it is needed See "Summary" below
INTRODUCTION	
BODY	There will, of course, be no section headed "Body", headings of this section will be topical
REFERENCES OR BIBLIOGRAPHY	
APPENDIX	If it is needed
DISTRIBUTION	

CONTENT OF TOPICAL REPORT

Title. – The title should be concise but inclusive· not "The Treatment of Hummingbird Eggs," but "Opening Ungerminated Hummingbird Eggs with Reactor-Driven Crosscut Saws " The program or project under which the work was done should be mentioned

Abstract. – The abstract determines whether the information in the report will reach the interested audience or be lost in the great volume of mislabeled and irretrievable data It should contain *specific* statements of the work done and *conclusions* reached Exact values rather than general statements should be given where possible. A reader should be able to use the abstract as a precise and accurate indication of the worth of the report *to him* It should spare the reader the time wasted in plowing through poorly abstracted reports that turn out to be unrelated to his interest

A good abstract is the first step in an exposition that moves from concentration to expansion

An abstract is printed on a card by the AEC for every ORNL report, and the information on the card is indexed In most cases, the indexer or potential reader sees *only* what is on the card Obviously, what does not appear on it cannot be indexed to be included in an available fund of information

The abstract should state *why* the work was done, *what* was done, the results, and if possible, include a statement concerning applicability For example: Solid fuel elements for the GCR were tested for mechanical strength by the customary ASTM methods Of six types of elements, only the type 347 stainless-steel-clad UAl_4 elements met specifications

The reader will be pleased, because he has found meaningful information. The indexer will be happy, because he can cross-index to UAl_4, stainless steel cladding, fuel elements, GCR, mechanical strength of fuel elements, and stainless-steel-clad fuel elements

Some writers find that the abstract is best written *before* the report is started, since its careful composition will impose an organization upon the rest of the report If the development of the report leads to a re-evaluation of the importance of certain items, the abstract may be amended *The temptation to omit qualifications which limit the validity of stated conclusions should be sternly resisted* (see Summary, below)

Contents. – For short reports, the table of contents should list only main headings, though this form is flexible The

proper choice of headings presupposes a logical organization of the report

Summary. – A summary is needed whenever a complete statement (not description) of work, results, conclusions, and qualifications of conclusions would run to much more than the 125-word arbitrary limit of an abstract The summary, like the abstract, is a compromise between conciseness and inclusiveness It should contain no description of detailed experimental processes, but neither should it omit any significant and pertinent observation, conclusion, or subject mentioned in the report

Introduction. – The introduction should define the *purpose*, *need*, and *scope* of the report and should mention, relate, and accurately reference previous pertinent work done on the subject If the report is too short to require a summary, then conclusions, recommendations, and limiting qualifications should be given full treatment when the *scope* of the report is described There should be no numbered references to figures or to data that are included in the report

The last paragraph of the introduction can consist of acknowledgments of the contributions of other persons, or the acknowledgments can be made at the end of the report and entitled as such

Body. – The body of the report should be organized under headings which are logical divisions of the work done If a process is discussed, it should be fully described before it is studied in part (e g , flowsheets should be given for chemical technology processes, a general theory should be outlined before one of its propositions is examined, the chemistry of a reaction should be represented by a list of equations before one or all of them are studied in detail) Jargon and shop-talk should be defined

References or Bibliography. – The standard style for references, footnotes, and bibliographies given in the Technical Publications Department Style Manual should be followed References *must* be accurate and complete Authors of personal communications should be identified by name and affiliation, and the date of the communication should be included The journal should be noted for references marked "to be published "

Appendix. – Necessary lengthy tables, large collections of figures, and exceptionally detailed descriptions of experimental procedures or process equipment which would block the flow of the report should be relegated to the appendix

Distribution. – For ORNL reports, the author should list persons he wishes to be added to the standard distribution

The author may, if he wishes, suggest the category for external distribution

Distribution for CF memos is prepared by the author

PROGRESS AND INTERIM REPORTS

The various sections of a major progress report should, as far as statement of scope and conclusions is concerned, follow the spirit of the outline given – the first paragraph or paragraphs of each section serving the purposes of summary and introduction

Where strict adherence to any of the recommendations given above would interfere with the clear presentation of the essentials of a particular report, the recommendation can be ignored.

All reports should be typed doubled spaced and only the *original* finished copies of text, tables, and figures sent to the editors

A list of figure legends must accompany each report

ORNL-1454
Revised

THE PREPARATION OF REPORTS

P. M. Reyling

DEC 6 1954

OAK RIDGE NATIONAL LABORATORY
Operated for
THE U.S. ATOMIC ENERGY COMMISSION
by
CARBIDE AND CARBON CHEMICALS COMPANY
A Division of Union Carbide and Carbon Corporation

MARTIN MARIETTA ENERGY SYSTEMS LIBRARIES
3 4456 0360648 0

THE PREPARATION OF REPORTS

This report is intended to serve as a guide in producing high-quality, uniform reports at the Oak Ridge National Laboratory. In any research laboratory the product is basic information or technology, which must be recorded in report form, primarily for the dissemination of the information, but also for a permanent record. Since reports are the major physical product of research, and ORNL reports represent the Laboratory to the people at other AEC installations and in industry, these reports obviously should be in the best form consistent with reasonable economy.

A service group, known as the Information and Reports Division, has been organized to obtain uniform reports at ORNL. Figure 1 shows the organization of this division, which prepares for reproduction, reproduces, and distributes reports that are circulated outside the Laboratory.

The preparation of the master copies of major reports from rough draft form is accomplished in the Technical Publications Department. Editorial, drafting, illustration, proofreading, composition, and make-up services are provided for the Laboratory by this group.

The master copies of major reports are printed by the Reproduction Department by the photo-offset process. Other reproduction processes currently available are Ozalid, Photostat, and offset printing from Multilith paper plates.

Finished reports are distributed by the Central Files Department, and a limited number of copies are stored. This department is also responsible for the storage of all master copies of the various documents.

Figure 2 outlines the work involved in publishing a typical report by the photo-offset process. This may appear to be a cumbersome procedure, but experience has dictated this minimum for obtaining high-quality work. It has been demonstrated that good illustrations cannot be made without this work sequence, regardless of the type of process used on the text.

There are many satisfactory ways to prepare a good report, and the style of the report varies widely with personal opinions and tastes. However, it is most desirable that

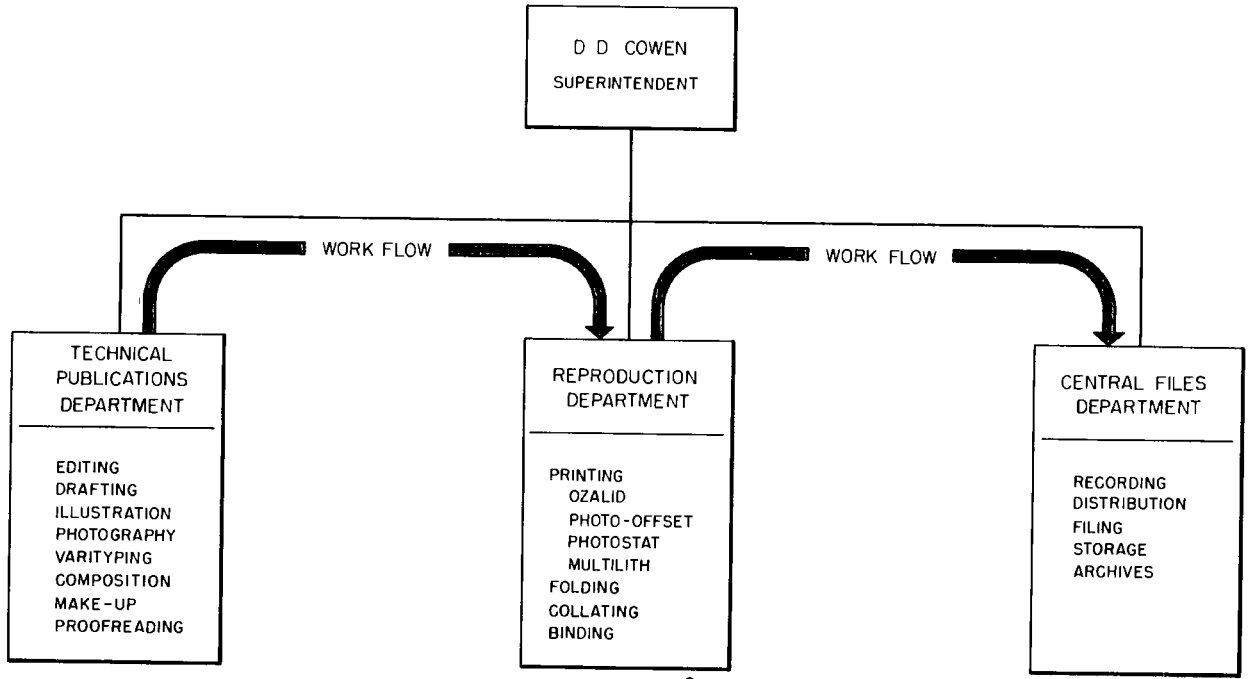

Fig. 1. Information and Reports Division Organization.

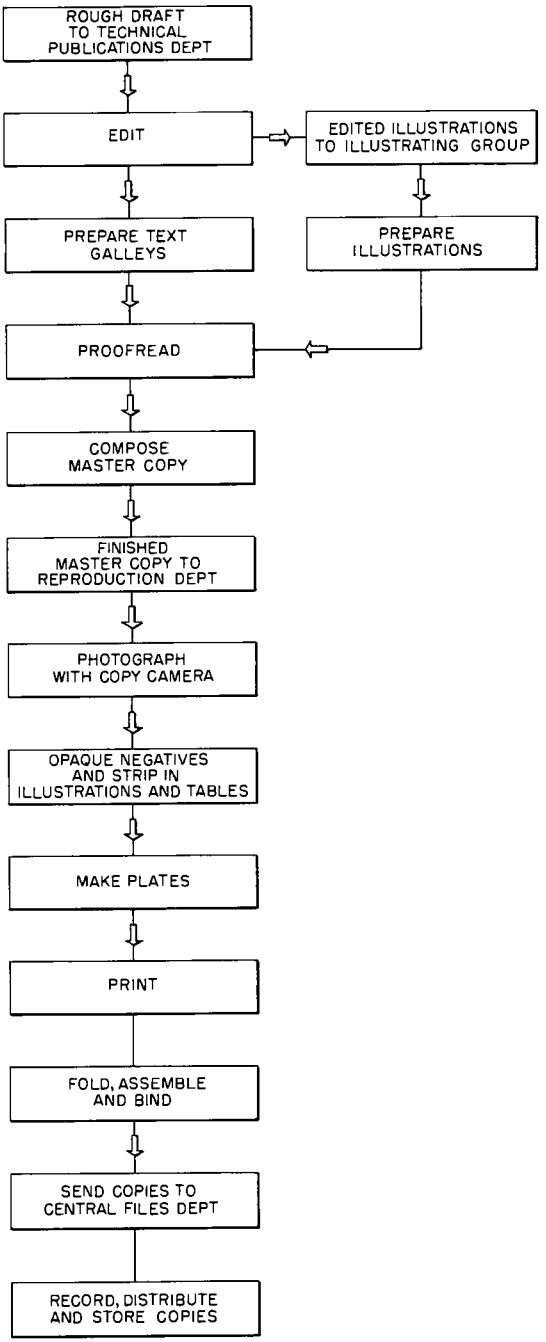

Fig. 2. Work Flow for the Photo-Offset Process.

uniform practices be used in the preparation of ORNL reports. The style currently in use has been reviewed by many technical people throughout the country, and, in general, it has received very favorable comment.

Some phases of style selection can be based upon technical considerations. This is true of the selection of the popular two-column style,[1,2,3] currently in use. Various studies have shown that this column width reduces reading time and improves over-all readability. Type faces are selected for appearance and readability[1,2,3] and to obtain a maximum amount of copy on a fixed page size.

One of the major features of a good technical report is simplicity. Most engineering or research schools touch on the matter of simplicity at some point in their respective curriculums. However, the complexities encountered in many technical fields have a tendency to creep into the over-all style of reporting. Of all the fields of endeavor, it certainly is most appropriate for the engineering and research fields to present to the reader the simplest and most forthright reports possible.

PLANNING THE ROUGH DRAFT

Writing Procedure. In the course of writing a report, the author normally includes the following steps: (1) investigation and study, (2) outline, (3) rough draft, and (4) review. The investigation usually involves compiling data and making literature surveys prior to and during the course of an experiment or test. The collected results should be carefully analyzed to avoid the use of fragmentary or disorganized information and to determine the most effective outline for presentation. The rough draft should be prepared directly from the outline, and particular attention should be given to the technical accuracy of statements made. Good sentence structure and grammar are desirable but, if poor, can be corrected by the editorial personnel. After completion of the rough draft, the entire document should be reviewed critically, with emphasis on the technical content. Reports to be distributed externally will be impartially reviewed by the

---

[1] *J Research Nat Bur. Standards* **48**, No. 5, 349–398 (1952).

[2] *J Aeronaut. Sci* **19**, No. 7, 433–504 (1952).

[3] *J Appl Phys* **23**, No. 7, 701–804 (1952).

editorial staff of the Technical Publications Department, if desired. Recommendations for revisions will be discussed with the author after review of the rough draft.

Component Parts. The main parts of a report are the title, abstract, introduction, body, conclusion, summary, and appendix. Not all these parts need be used in a report, and a judicious choice of which should be used is essential.

Many reports have fallen into an academic rut because an attempt has been made to utilize and contain all these parts and their titles physically in one document. Such reports are difficult to digest and many readers often give up after partial perusal. A good report should serve all interests equally. The busy executive should be able to read a concise summary that states the problem and major findings and gives enough background information to tie the subject to associated interests. The technical or research readers should be able to obtain a summarized or a complete picture, as desired. This can be accomplished by separating the detailed experimental procedures and results and appended material from the general discussion in the body of the text. Although these types of material should be obviously separated, they should occur in appropriate relationship to other experimental or detailed material.

Lengthy Reports. In lengthy reports covering projects or extensive subjects, a desirable outline is the following

1. Summary
2. Introduction
3. Body
4. Conclusions (where required)

In the lengthy report, the summary is a very significant part, since an abstract would be difficult to prepare and would be of questionable value. In the summary, the major conclusions should be stated to provide the reader with an over-all picture of the status of the project or the results of a study. In project reports covering many fields and subjects, the report should be sectionalized and a brief summary included in the beginning of each major section. The brief summaries should supplement but not replace the general over-all project summary. In these complex reports, a high degree of readability will be achieved by treating each major subject as a short report.

The use of appendixes to a lengthy report should be minimized or eliminated. A more modern approach to the problem of appended material or detailed experimental results is to retain the material in the body of the report and use smaller type[4] to separate it from the general discussion in that section. Such a presentation has the advantage of retaining detailed information in its proper place while allowing the reader to pass over such information if he desires a more general review of the report.

Medium-Length Reports. In medium-length topical reports, a good order for the parts is the following·

1. Summary
2. Introduction
3. Body
4. Conclusions (where required)

If separate conclusions are incorporated in the report, the summary should contain a generalized statement of the conclusions. Conclusions should not be handled as a separate part of the report unless they are lengthy or there are many individual minor conclusive statements that would make the summary too bulky. Appended material should be fitted appropriately into the body of the report.

Short Reports. In short topical reports, an ideal choice for the order of the parts is the following

1. Summary
2. Introduction and body

In these reports, the summary serves equally well as an abstract, and the author's conclusions may be contained therein. Introductory material, if required, should be the opening paragraphs of the body of the report. This type of report, when properly prepared, should be the most easily read document an author can produce.

In all reports the summary should show as a physical title. In a few special cases in which appended material must be included as such, the appendix should also show as a physical title. Introduction and conclusions should appear as physical titles only in cases in which the subject matter demands it.

---

[4] *Chem Quar Prog Rep. Dec 31, 1951,* ORNL-1260, pp 58–65, 89–90.

References are a necessity in technical reports, and authors should be careful to give adequate information. As a minimum, a reference should include author's name, title of report or publication, report number, and page number.

References should not be confused with bibliography material. Bibliography listings are located at the end of chapters or at the end of the entire report, dependent on the length and content of the document. References are placed as footnotes on the page where the call-out occurs.

ILLUSTRATION

Illustrations are an essential part of any report. In many cases a good illustration conveys much more information than many pages of written matter describing the same data. Each illustration must be an integral part of the report and should be discussed or appropriately referenced in the text. Authors should weigh the value of each illustration in the over-all report and use only those that make a positive contribution.

Repetition of data by illustration and tabulation should be studiously avoided, since such occurrences imply an attempt to "stuff" the document.

Certain limitations in size are imposed on all illustrations used in reports by the equipment available, at the Laboratory, for photo-offset reproduction. The maximum finished size of any illustration cannot be more than 11 by 17 in., including margins and binding edge. Each illustration will be sized before the master copy is prepared, the size is determined by the value of the illustration in the copy or by its physical limitations. In general, it is good practice to minimize the number of fold-in (11 by 17 in.) illustrations.

Large illustrations may be used for special work, other than reports. In all cases in which illustrations larger than 11 by 17 in. are required, a photographic or Ozalid process must be used for reproduction. Large illustrations are expensive, and to justify this expense they should show information definitely unobtainable from a smaller print.

Usually, reports that contain a large number of illustrations over 11 by 17 in. are poorly prepared. Large drawings containing construction details are out of place in most reports. A general picture or drawing, with additional small sketches

of special details, is preferable. Readers requiring additional information for construction or study may obtain a set of larger prints designed for that purpose.

Centralization of illustration and drafting services is necessary for obtaining uniform, high-quality work. In a centralized unit, standards are easily maintained, and personnel and equipment can be used efficiently.

In various types of line-cut illustrations, the weights of lines used will determine the over-all clarity of presentation. Properly drawn, thin, India-ink lines are the most satisfactory for good reduction and faithful reproduction. Many illustrations are made in rather large sizes for ease in drawing and lettering and then reduced.

In the following pages some actual illustrations are shown that feature either desirable practice or point out weaknesses. Most of these illustrations have been used in ORNL reports.

Figures 3 and 4 exemplify properly executed illustrations. The details are excellent, although the originals were reduced by 35%. In Fig. 4 the lettering is clean and clear even in the scale on the dividing head.

Figure 5 represents a type of illustration commonly encountered in technical reports. In all illustrative circuit arrangements, the weights of lines are very important. Components should have different ink weights than the actual circuit lines. The original drawing for Fig. 5 was reduced 55%. Figure 6 illustrates a satisfactory apparatus drawing. Figure 7 shows another type of detail drawing that was reduced 50% without destroying the pertinent details.

Figure 8 is an unsatisfactory detail illustration, for which the original drawing was prepared in such a size that the details are too small on the final illustration. It was reduced 75%, or down to 25% of the original size. The illustration could be presented with greater clarity by breaking it at section A-A and making detail sketches of each half so that less reduction would be required for the final copy. Another possibility would be to redraw the liner in simpler form without the finer details and group separate sketches of each major detail around the illustration. Much less reduction would be required with such an arrangement and none of the essential details would be lost.

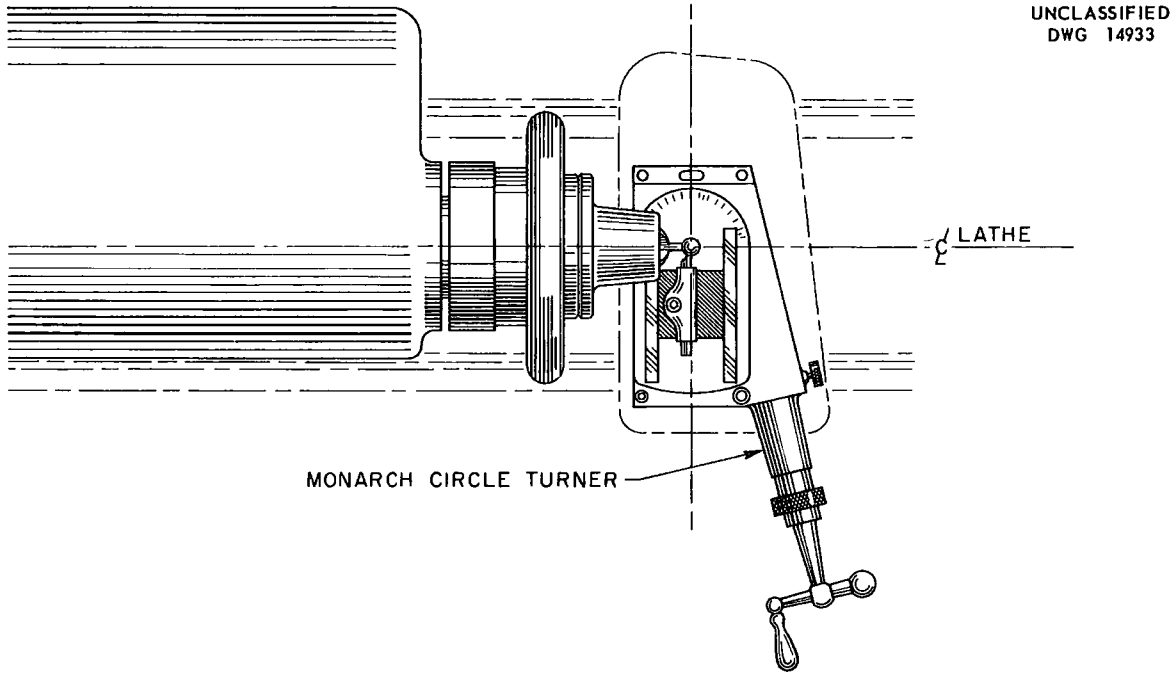

Fig. 3. Arrangement for Machining Spherical X-Ray-Diffraction Specimens.

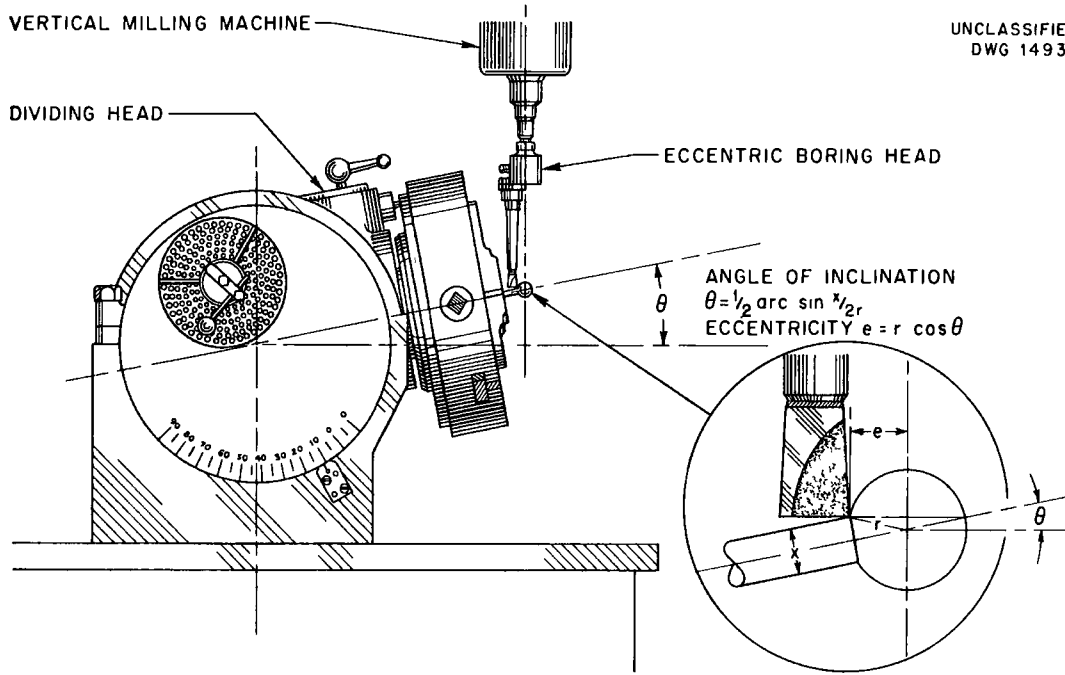

Fig. 4. Preferred Arrangement for Machining Spherical X-Ray-Diffraction Specimens.

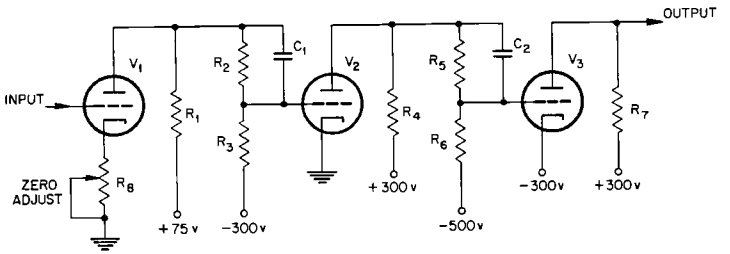

Fig. 5. Conventional Single-Ended Operational Amplifier.

Figure 9 shows a sketch that has been poorly executed and has a nonprofessional appearance. The inlet and outlet connections and the graphite reflector are very crudely drawn. The lettering is ragged, the weight of the letters is entirely too heavy (note letter e), and the choice of capital and lower-case letters is not appropriate. The illustration does not warrant a full page, as originally allotted in another report, a two-column, one-half-page cut would be generous, and a one-column cut is adequate with more professional rendering.

Figures 10, 11, 12, and 13 illustrate proper treatment of various data in graph form. Note that all the figures have light lines for background information, that is, cross sections or grid lines, illustration outline, and other supporting figures. The curves are, appropriately, the heaviest lines in the figures. Obviously, the curve lines must not be made too heavy, or in some instances an error would be introduced. This problem is handled by using light-weight continuous background lines and medium-weight curve lines. Figures 10 through 13 have the following reductions 67, 66, 33, and 52%. These reductions all allow reasonable treatment of the data involved.

Figure 14 illustrates poor rendition of the data shown. The original selection of a full page for the two curves is unnecessary and does not clarify the data, as shown, one column is appropriate. The title is improperly placed and inadequate, the formula MnF_2 supplies little information describing the illustration. Note that the curve is the lightest line in the figure, the relative importance of the

UNCLASSIFIED
DWG 14295

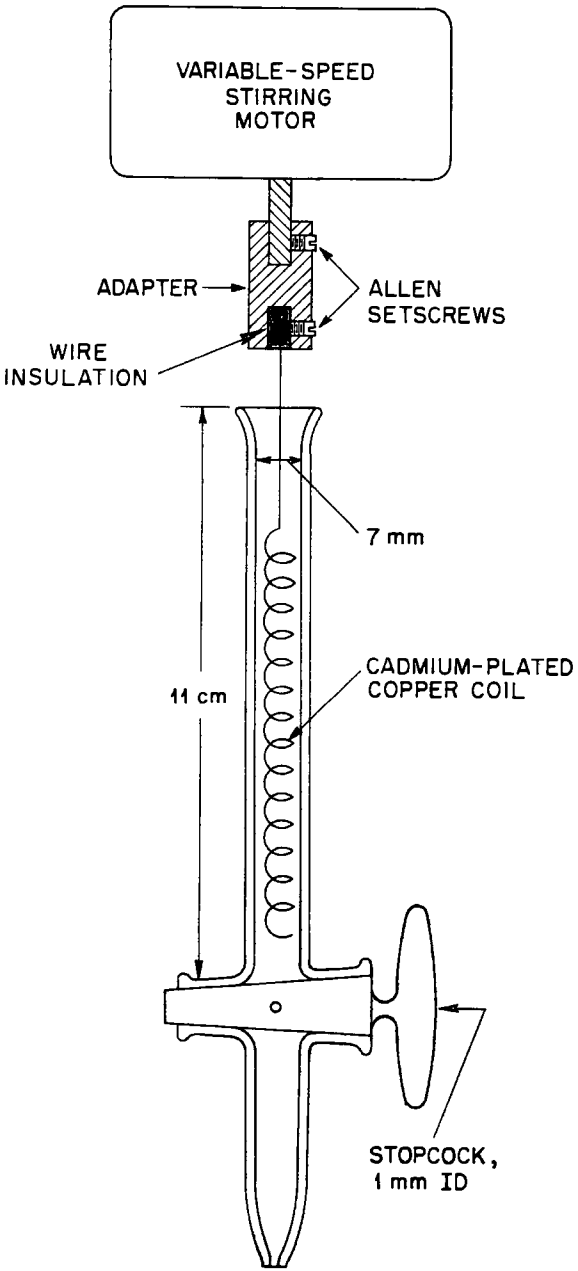

Fig. 6. Microreduction Apparatus.

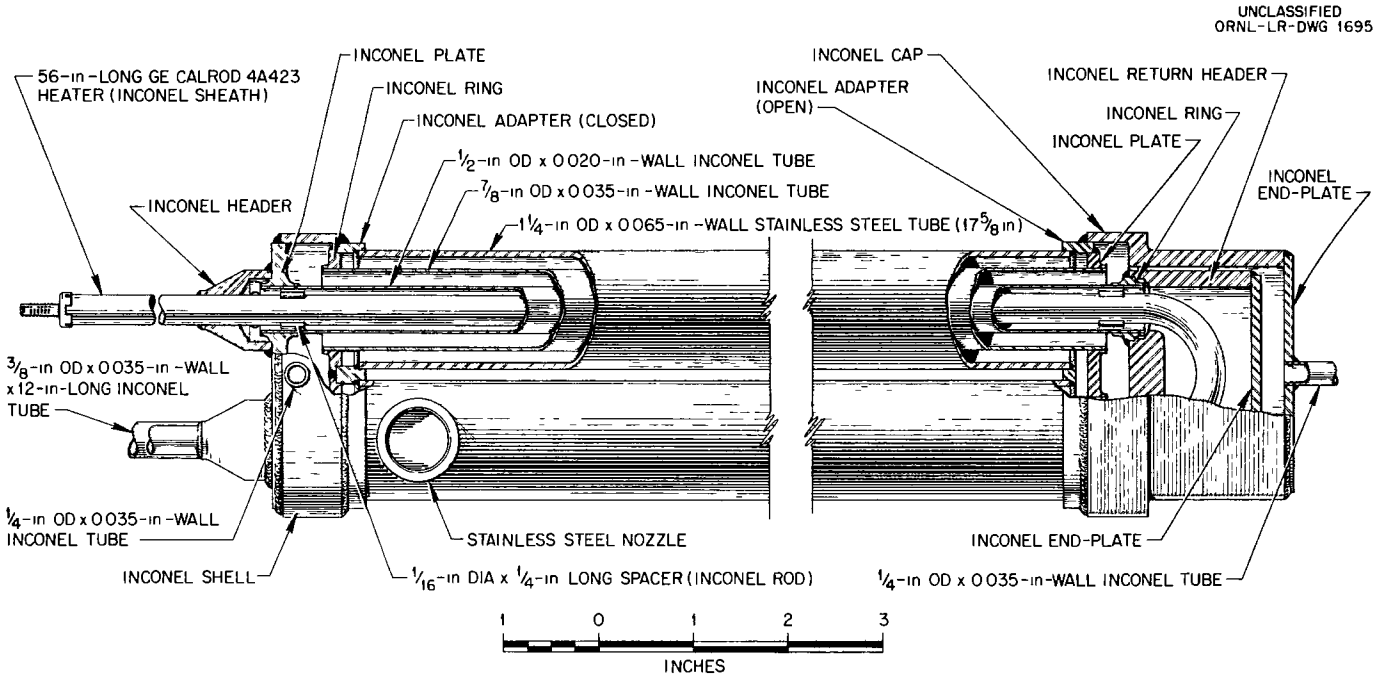

Fig. 7. Concentric-Tube Double-Wall Heat Exchanger for Use Inside a Reactor Hole.

NOT CLASSIFIED
Dwg # 10751

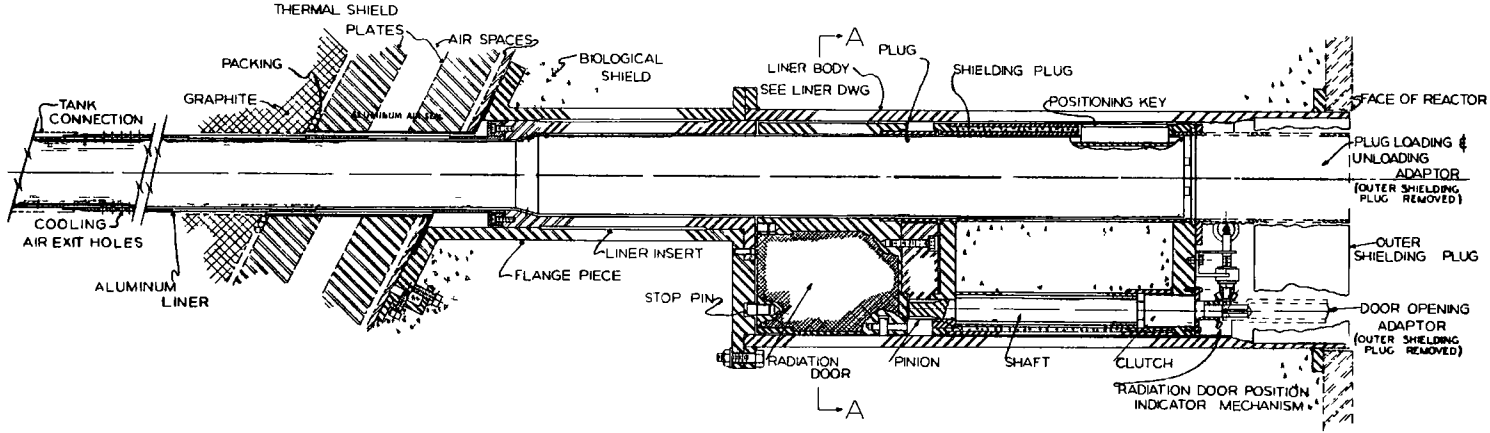

Fig. 8. Typical Beam Hole Liner and Components.

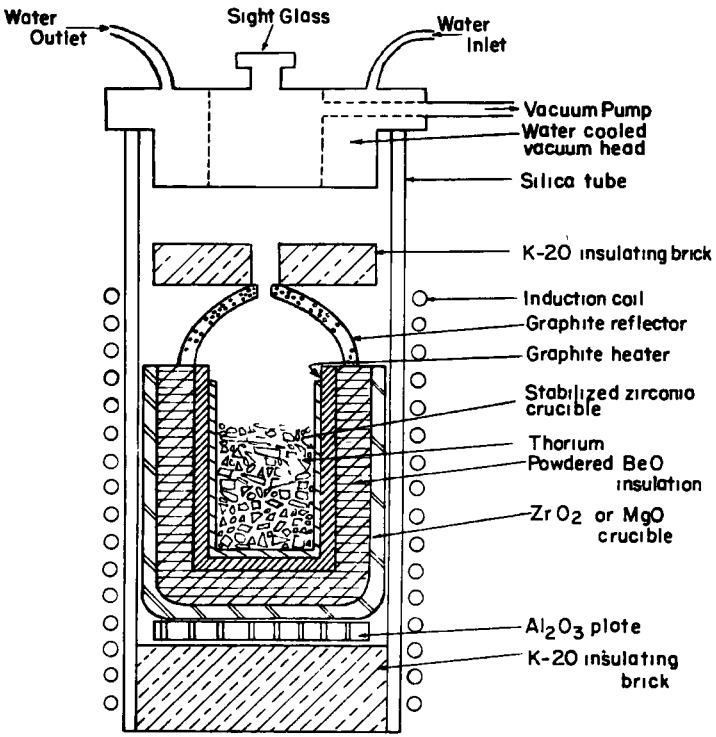

Fig. 9. Schematic Diagram of Silica-Tube Vacuum Furnace.

various lines should have been reversed. Figures 15 and 16 have the same faults as Fig. 14, in varying degrees.

PHOTOGRAPHY

Photographic illustration can be an asset to any report. However, each photograph should add something to the report and should be appropriately discussed in the text. It is most important that the photograph provide some information that cannot be conveyed readily by other means. Authors should be careful to analyze each layout, prior to exposure of any film, to plan the detail or other requirements. Many photographs have been used in which there was too much detail. If the details are important, it is better practice to make a small photograph of each important detail so that individual treatment will emphasize their value.

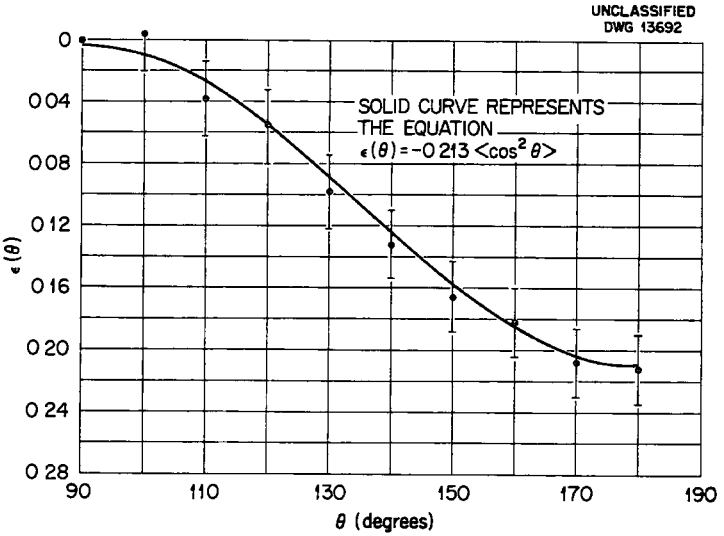

Fig. 10. Angular Distribution of the Coincident Gamma Rays from Hf^{177}.

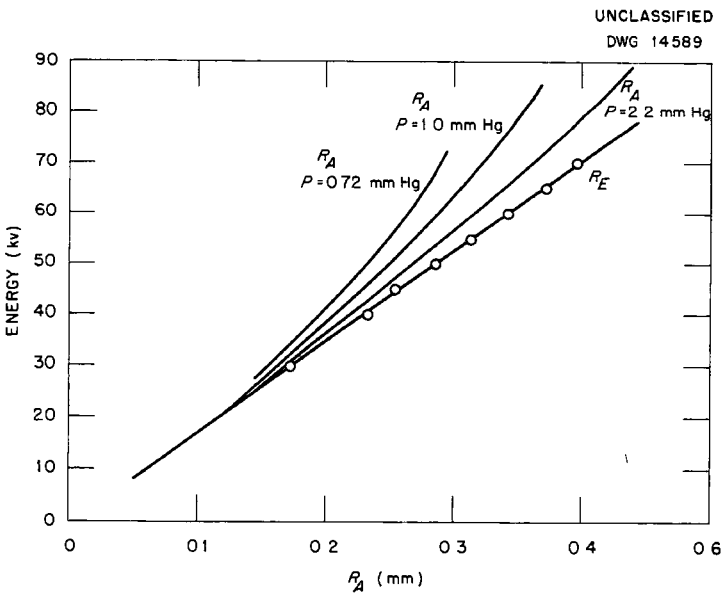

Fig. 11. Range of N_2^+ in Air.

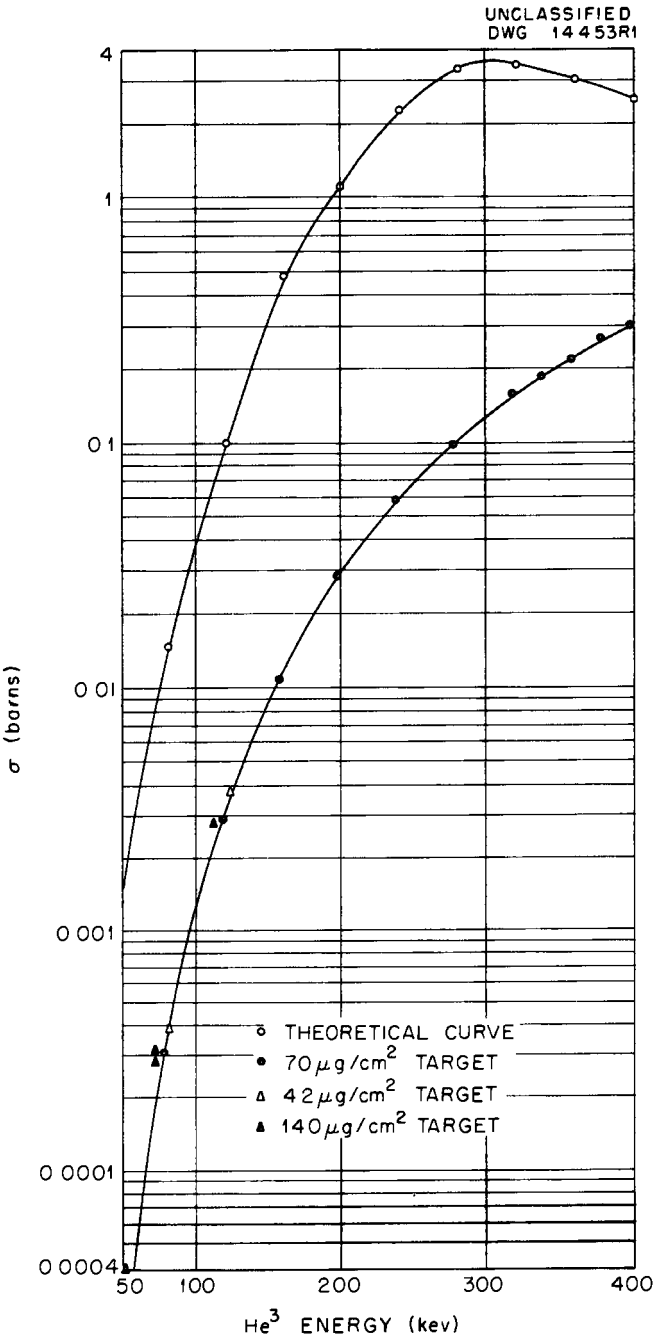

Fig. 12. Yield of Protons from the Reaction $H^2(He^3, H^1)He^4$ with Incident He^3 Bombarding Energy.

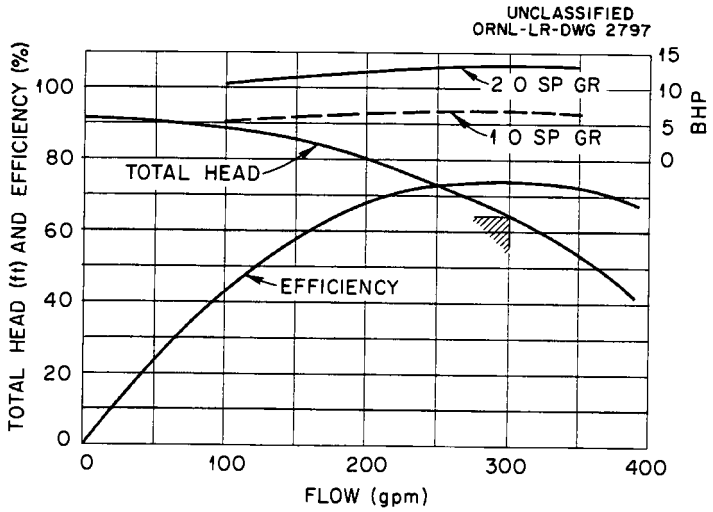

Fig. 13. Curve for 300-gpm Pump.

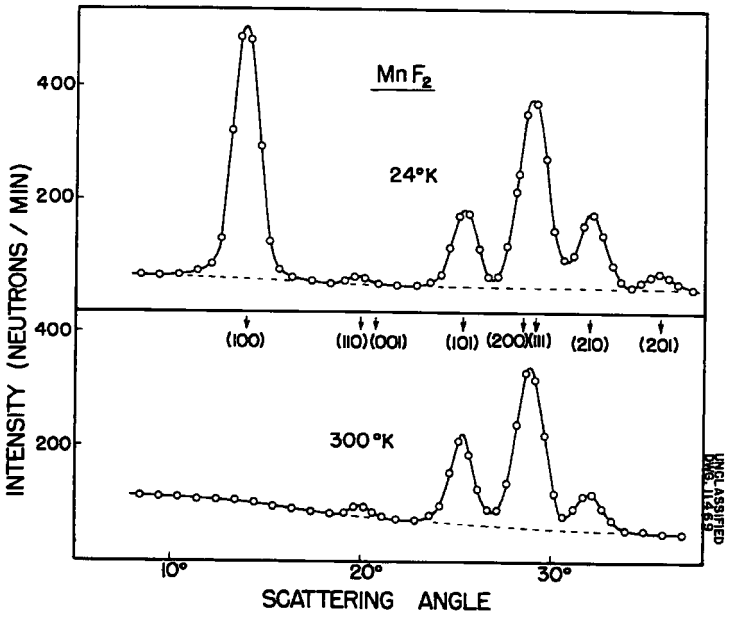

Figure 14

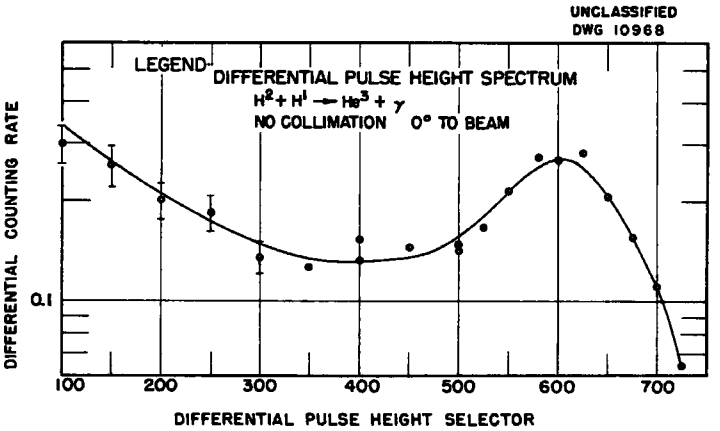

Figure 15

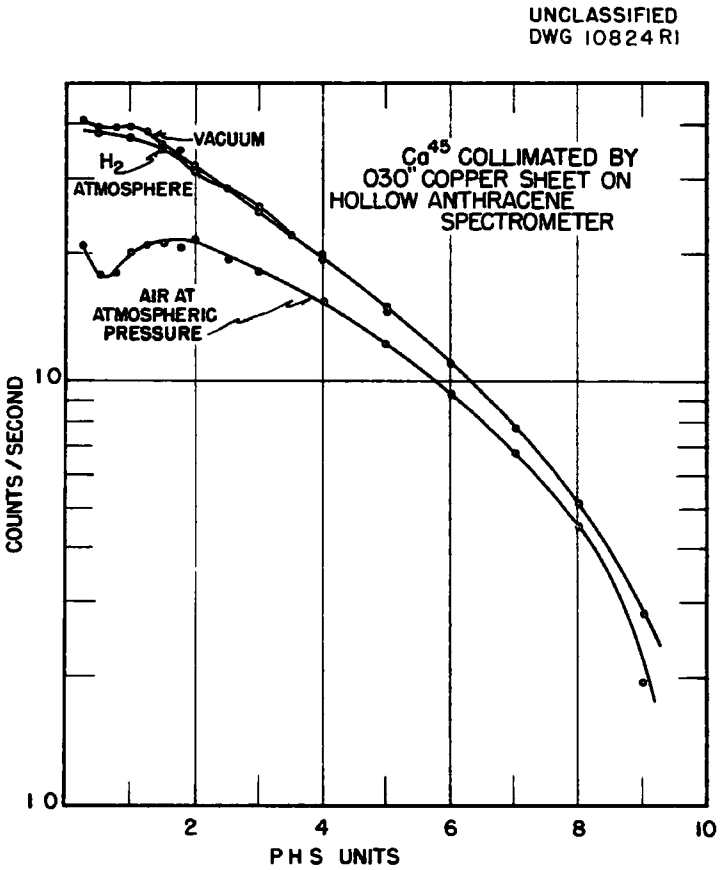

Figure 16

Photographs are produced as halftones, which means that the negative is exposed through a fine screen. Currently, a 120-line screen is being used. Halftones are necessary wherever shades of gray are used. Early printers developed the halftone technique to reproduce grays because printer's ink is black, not gray. Ordinarily, if ink is placed on type or a line cut and impressed on paper, the paper is either black in the impressed areas or white elsewhere. By various spacings of lines or varying the sizes of dots, different shades of gray can be synthesized. Obviously, as the dots or lines are moved farther apart, the grays will be lighter shades. It is important to understand that broad changes in shades will be reproduced equally well by halftone or line-cut methods. However, fine tones of gray are impossible to produce by line-cut methods. Figures 17 and 18 show the same photograph produced by line cut and by halftone techniques.

One of the most difficult problems is the satisfactory reproduction of photomicrographs and allied work. All the printer's art is required, and suitable paper must be used for top-quality halftone reproduction. It is essential that the paper and the plate that has the negative image have visible grain or imperfections minimized. The philosophy behind the care taken with photomicrographs stems from good reasoning. It is felt that the printed illustrations should show essentially as much as a good photographic print made in the metallurgist's laboratory. If a large loss in detail is sustained in reproduction, it is useless to print the photomicrograph. Currently, the loss sustained is so slight that it is almost undetectable. Figures 19 through 22 illustrate detailed photographs successfully reproduced.

When photomicrographs or similar illustrations are submitted, they should be of such size that their width will not exceed $3\frac{1}{8}$ or $6\frac{1}{2}$ in. Heights should not exceed 8 in. It is especially important to hold to these sizes on photomicrographs in order to avoid the necessity of reduction, which might lose some of the essential detail. If the prints are larger than the afore-mentioned sizes, it is sometimes possible and profitable to crop the illustration so that it satisfies dimension requirements and shows the desired detail. Occasionally, cropping is necessary where nonessential or nonpertinent detail is likely to confuse the illustration.

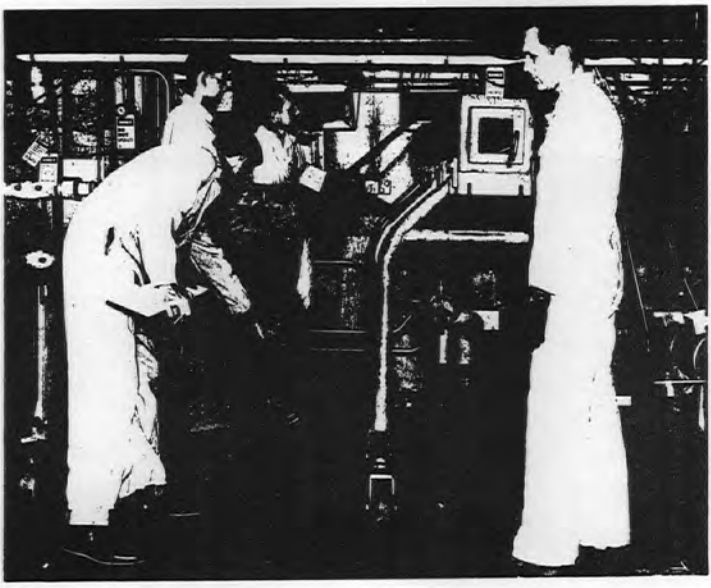

Fig. 17. Irradiated Elements Being Removed from Isotope-Loading Face of the Reactor. (Line-cut technique)

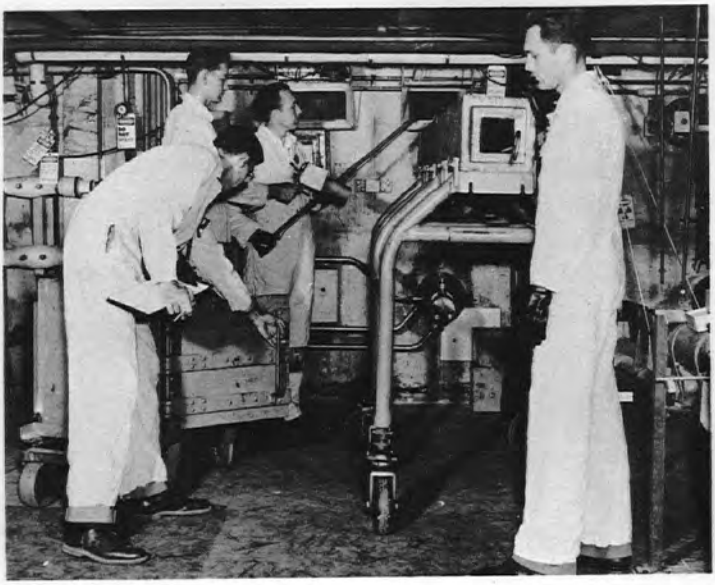

Fig. 18. Irradiated Elements Being Removed from Isotope-Loading Face of the Reactor. (Halftone technique)

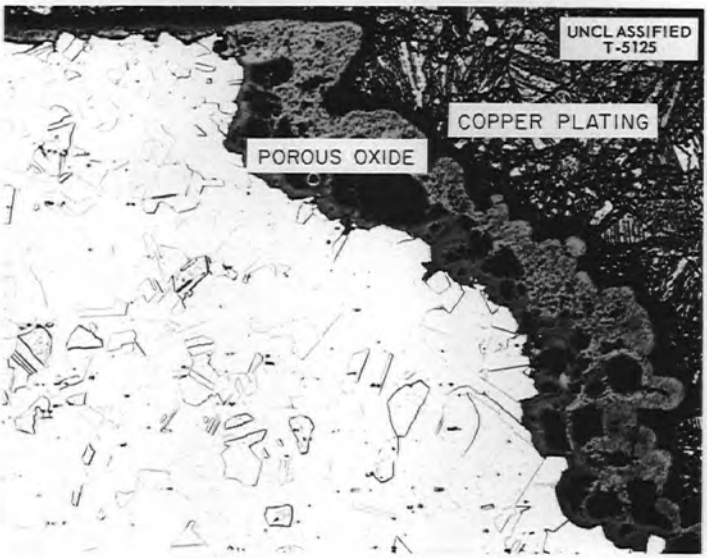

Fig. 19. Typical Photomicrograph. (Halftone technique)

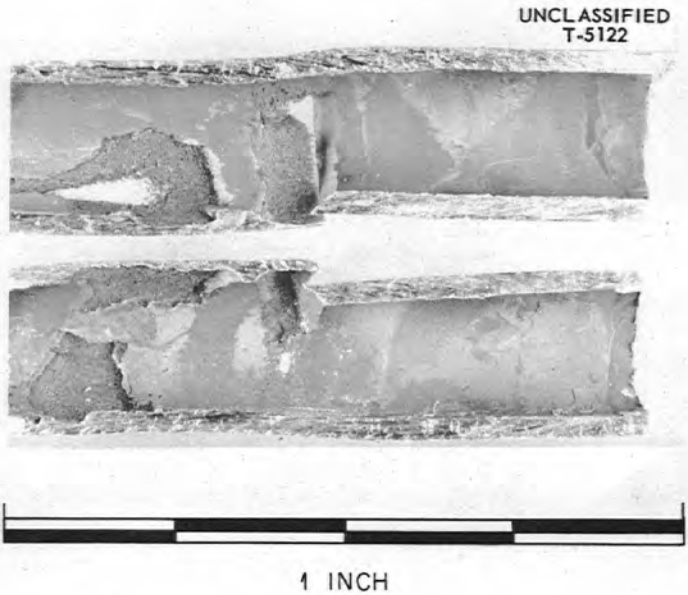

Fig. 20. Typical Photomicrograph. (Halftone technique)

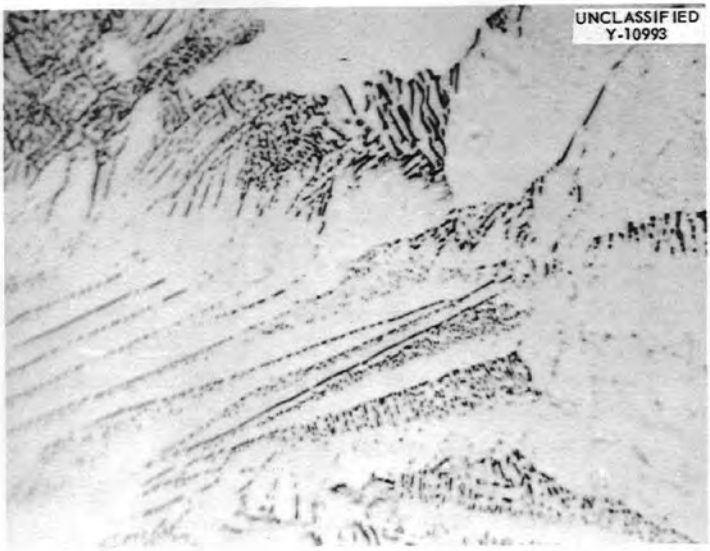

Fig. 21. Typical Photomicrograph. (Halftone technique)

Fig. 22. Typical Photomicrograph. (Halftone technique)

In the halftone photo-offset process, best reproduction will be obtained from glossy prints. Therefore the positives submitted should have a high-gloss finish. If the illustration has special or explanatory information in the form of call-outs or notes, two clear prints should be provided: one with no marking and the other marked with the desired information.

COMPOSITION

All major ORNL reports are composed on the Coxhead composing machines, commonly known as Vari-typer machines. These machines provide changeable type bars and variable spacing between characters or words. The variable spacing permits even right- and left-hand margins, hence, the work from these machines compares favorably with the best commercial composition.

Typical samples of body, bold face, and italic types in one size are illustrated in the following for the new model DSJ machine.

620-10-B

Lower Case

q	w	e	r	t	y	u	i	o	p
a	s	d	f	g	h	j	k	l	,
z	x	c	v	b	n	m	,	.	-

Figure

1	2	3	4	5	6	7	8	9	0
'	fl	$	%	–	&	'	(	)	½
fi	¼	¾	ff	¢	*	?	,	.	/

Caps

Q	W	E	R	T	Y	U	I	O	P
A	S	D	F	G	H	J	K	L	
Z	X	C	V	B	N	M	,	.	!

670-10-B

Lower Case

q	**w**	**e**	**r**	**t**	**y**	**u**	**i**	**o**	**p**
a	**s**	**d**	**f**	**g**	**h**	**j**	**k**	**l**	**;**
z	**x**	**c**	**v**	**b**	**n**	**m**	**,**	**.**	**-**

Figure

1	2	3	4	5	6	7	8	9	0
'	fl	$	%	–	&	'	(	)	½
fi	¼	¾	ff	¢	*	?	,	.	/

Caps

Q	W	E	R	T	Y	U	I	O	P
A	S	D	F	G	H	J	K	L	.
Z	X	C	V	B	N	M	,	.	!

625-10-B

Lower Case

q	*w*	*e*	*r*	*t*	*y*	*u*	*i*	*o*	*p*
a	*s*	*d*	*f*	*g*	*h*	*j*	*k*	*l*	,
z	*x*	*c*	*v*	*b*	*n*	*m*	,		-

Figure

1	*2*	*3*	*4*	*5*	*6*	*7*	*8*	*9*	*0*
'	*fl*	$	%	–	&	'	(	)	½
fi	¼	¾	*ff*	¢	*	?	,	.	/

Caps

Q	*W*	*E*	*R*	*T*	*Y*	*U*	*I*	*O*	*P*
A	*S*	*D*	*F*	*G*	*H*	*J*	*K*	*L*	
Z	*X*	*C*	*V*	*B*	*N*	*M*	,		!

Special mathematical and engineering or chemical formulas and symbols may be obtained by using the type shown below.

710-10-B

Lower Case

1	ℑ	/	°	}	–	×	*	≡	→
2	4	6	{	9	=	·	≈	·	'
3	5	7	8	0	+	ℜ		'	-

Figure

ξ	λ	$\propto$	ρ	π	a	θ	∂	κ	σ
τ	$\subset$	δ	ϕ	β	ω	$\int$	ϵ	[	$\surd$
ζ	ψ	χ	γ	η	ν	μ	ι	]	$\supset$

Caps

Ξ	Λ	$\wp$	P	Π	A	Θ	|	K	Σ
T	<	Δ	Φ	B	Ω	>	E	∞	.
Z	Ψ	X	Γ	H	N	M	(	)	,

264

Lower Case

$\pm$	ω	ϵ	ρ	τ	+	−	=	θ	π
a	σ	δ	ϕ	∞	η	$\rightarrow$	κ	λ	:
ζ	ξ	γ	ψ	β	ν	μ	$\int$	$\cdot$	/

Figure

$\pm$	ω	ϵ	ρ	τ	+	−	=	θ	π
a	σ	δ	ϕ	∞	η	$\rightarrow$	(	)	$'''$
ζ	ξ	γ	ψ	β	ν	μ	$\int$	$\equiv$	$\surd$

Caps

$^\circ$	Ω	>	<	..	\	⎫	¯	_	Π
$'$	Σ	Δ	∂	$\sim$	{	}	[	]	|
$''$	∇	Γ	$\angle$	⎭	⎫	⎩	⎧	⎤	$\surd$

It is particularly important that all composition on these machines be centralized. Many unsuccessful and uneconomical operations have been attempted by people inexperienced with these machines, because the main problems with them are maintenance and training. Decentralization is a serious drawback to the efficient use of personnel and machines.

The authors of the various reports have a limited interest in composition, but it is most desirable that they know of the special letters and symbols available for mathematics, chemistry, physics, and other technical fields. Some samples of various equations in their final form are shown in the following:

$$\frac{dS_i}{dt} = R - k_i S_i + \lambda_i (C - S_i)$$

$$\sigma = V\left(C + \sum_i \epsilon_i S_i\right)$$

$$\frac{d\sigma}{dt} = V\left[\left(1 + \sum_i \epsilon_i\right) R + \sum_i \epsilon_i k_i S_i\right]$$

$$S_i \cong \frac{R + \lambda_i C}{k_i + \lambda_i}$$

$$\beta = \frac{\sum_i \epsilon_i k_i \lambda_i / (k_i + \lambda_i)}{1 + \sum_i \epsilon_i \lambda_i / (k_i + \lambda_i)}$$

$$V(\sigma) = C_0 \left(\frac{\partial \sigma}{\partial C_0}\right)^2 + C_1 \left(\frac{\partial \sigma}{\partial C_1}\right)^2 + C_2 \left(\frac{\partial \sigma}{\partial C_2}\right)^2$$

$$I'(S_j, M_n) = \sum_{i=-S}^{S} I(S_j, M_n)\, P(S_j, M_i, M_n)$$

$$\frac{dE}{dr} = \mu \left(r \frac{d\omega}{dr}\right)^2$$

$$E_{j\,k-1,k+1}(\delta) = w\delta^0 + x\delta^1 + y\delta^2 + z\delta^3$$

REPRODUCTION

Photo-Offset Process. The most important process available in reproduction is photo-offset. Photo-offset is a highly versatile process and may be used on any type of material, whether line cut or halftone. The following paragraphs briefly outline the various steps followed in producing the finished document from the master copy.

Negatives are made with a copy camera that is capable of reducing or enlarging copy within the required limits. The amount of reduction or enlargement any particular copy will stand is usually a function of the copy rather than a limitation of the camera. Halftones are produced with a 120-line screen, which is entirely satisfactory for general report work.

The finished negative is opaqued with Aquadag or similar solutions to remove all flaws or spots in the negative, as well as certain guide lines that are more easily removed at this point than during make-up. Illustrations or tables are stripped with appropriate copy at this point so that each page has its own finished negative.

The finished negative for each page is placed in a plate-making frame, over a sensitized plate, and exposed with strong arc light. Following application of chemical solutions, the plate is ready for use on the printing press. The plate most widely used is a sensitized aluminum sheet, although zinc plates and several other types are occasionally employed. The aluminum plate is the most versatile, since it is more economical in first cost, chemical processing is simpler and shorter, and the quality of the printed product is very high.

The prepared plates are placed on Multilith machines and the appropriate number of copies are run off on a good-quality paper. Multilith machines are small offset printing presses.

A rotating collating table, shown in Fig. 23, is available to speed assembly of large reports. After assembly, the reports are stapled and the binding taped, if necessary. In some instances, reports are stapled in the fold. This is a fast, convenient way to handle reports that are not over ½ in. thick in the fold. For this procedure, an automatic folding machine is used that can fold as fast as a press can produce printed sheets.

Multilith Offset Process. The Multilith offset process uses a simple paper plate, typed with a special ribbon, to produce multiple copies at low cost. However, it is essential that the limitations of this process be strictly observed. It is entirely satisfactory for office memos, informal reports, and general office use, if only one run not exceeding 1000 copies is to be made.

Fig. 23. Rotating Collating Table.

The process is unsatisfactory for formal reports or for material that may have to be rerun. The limitation of 1000 good copies must be interpreted, since various authorities list figures that run up to 8000 copies. The 1000 figure is based on an average plate, stored under normally available conditions, and an average use factor. Ideally, Multilith plates and ribbons should be stored under controlled conditions at 50°F and 50% relative humidity. The wide deviations from these conditions, during summer and winter, reduce the number of good copies that can be produced. In a recent case, plates and ribbons were stored in a metal building where temperatures in the summer reached 100°F or higher and the relative humidity went up to 96%. These plates and ribbons were severely damaged, many to such an extent that no usable copies were obtained.

The appearance of the final product of the Multilith process can be appreciably improved by margination. Margination is accomplished by an extra patented attachment for the ordinary typewriter that is used in such a manner that the right hand margins are all even on any one page. The typing time for marginated copy is about 80% greater than that for unmarginated copy.

Ozalid Process. The old blueprint process is worthy of mention only because it is considered the forerunner of the Ozalid and Bruning processes. The blueprint process required preparation of original material in black ink on translucent paper. When such copy is placed in contact with the sensitized blueprint paper and exposed to strong light, chemical washing turns the print blue wherever the the light hits it, all other areas remain white.

The Ozalid or Bruning processes are much the same as the blueprint process except that the prints are usually black-and-white and different chemicals are used. In addition to the black-and-white prints, brown-and-white, blue-and-white, red-and-white, and green-and-white prints can be made. The Laboratory is currently using blue-and-white prints. The colors are determined by the dye used in the various sensitized papers.

One of the best features of the Bruning and Ozalid prints is that they are developed dry, whereas the blueprint process requires wet developing. Obviously, considerable changes in paper size may result in the wet process and cause

changes in possibly critical dimensions on certain prints. Therefore the Ozalid process or the Bruning process should be used for large prints of mechanical and architectural drawings or for any print on translucent paper that is larger than 11 by 17 in. These processes are *not* considered satisfactory for reports with wide distribution. However, they are eminently satisfactory for preliminary reports with limited distribution.

These processes have additional advantages in that, by varying the sensitized material, prints can be made on a variety of materials, such as white paper, transparent paper, clear film, frosted film, tracing cloth, and opaque cloth or film. It must be remembered that these processes make copies of the same size as the original, no enlargements or reductions are possible.

Photostat Process. The Photostat machine is essentially a copy camera designed to do a limited number of things more quickly and easily than a regular copy camera. It differs from the copy camera in that it uses photographic paper rather than film and employs a prism so that its copies will be readable rather than reversed. The process normally makes a paper negative (white copy on black background), although positive prints may be obtained by photographing the negative. In ordering copies, if a black print on a white background is desired, the order should show one Photostat negative and as many positive copies as required.

Photostat work features speed and should be used for a limited number of copies. The Photostat process is not satisfactory for reports because it cannot compete with the photo-offset process on large-quantity copying. Also, it is difficult in this process to obtain completely white backgrounds on the positive copies. In the Photostat process, in contrast to the Ozalid process, it is possible to enlarge or reduce the copy. Prints up to 17 by 24 in. can be made, and copy can be enlarged twice or reduced one-half in one step. Additional steps are required for enlargement or reduction beyond those ratios.