MARTIN MARIETTA ENERGY SYSTEMS LIBRARIES
3 4456 0360687 2

CENTRAL RESEARCH LIBRARY
DOCUMENT COLLECTION

ORNL 1655
Instrumentation
Cy. 4

CLOUD CHAMBER FOR MEASURING THE PARTICLE DENSITY OF AN AEROSOL

Bernard G. Saunders

CENTRAL RESEARCH LIBRARY
DOCUMENT COLLECTION
LIBRARY LOAN COPY
DO NOT TRANSFER TO ANOTHER PERSON
If you wish someone else to see this document, send in name with document and the library will arrange a loan.

CONDUCTED JOINTLY BY

OAK RIDGE NATIONAL LABORATORY
HEALTH PHYSICS DIVISION
OPERATED BY
CARBIDE AND CARBON CHEMICALS CO.

RADIOLOGICAL DIVISION
CHEMICAL CORPS
CML. AND RAD. LABORATORIES
ARMY CHEMICAL CENTER, MARYLAND

ORNL 1655

Copy No. 4

Contract No. W-7405-eng-26

HEALTH PHYSICS DIVISION

CLOUD CHAMBER FOR MEASURING THE PARTICLE DENSITY OF AN AEROSOL

Bernard G. Saunders

PROTECTIVE EQUIPMENT EVALUATION PROGRAM

(In Cooperation with the Army Chemical Corps)

E. G. Struxness, Group Leader

DATE ISSUED

FEB 4 1954

OAK RIDGE NATIONAL LABORATORY
Operated by
CARBIDE AND CARBON CHEMICALS COMPANY
A Division of Union Carbide and Carbon Corporation
Post Office Box P
Oak Ridge, Tennessee

MARTIN MARIETTA ENERGY SYSTEMS LIBRARIES

3 4456 0360687 2

INTERNAL DISTRIBUTION

1. C. E. Center
2. Biology Library
3. Health Physics Library
4-5. Central Research Library
6. Reactor Experimental Engineering Library
7-11. Laboratory Records Department
12. Laboratory Records, ORNL R.C.
13. C. E. Larson
14. L. B. Emlet (K-25)
15. J. P. Murray (Y-12)
16. A. M. Weinberg
17. E. H. Taylor
18. E. D. Shipley
19. K. Z. Morgan
20. F. C. VonderLage
21. R. C. Briant
22. C. P. Keim
23. J. H. Frye, Jr.
24. J. A. Swartout
25. S. C. Lind
26. R. S. Livingston
27. F. L. Culler
28. A. H. Snell
29. A. Hollaender
30. M. T. Kelley
31. T. A. Lincoln
32. A. S. Householder
33. C. S. Harrill
34. C. E. Winters
35. D. W. Cardwell
36. J. A. Lane
37. E. E. Anderson
38. D. D. Cowen
39. E. G. Struxness
40. J. W. Thomas
41. E. E. Grassel
42. R. L. Bradshaw
43-44. B. G. Saunders
45. W. D. Cottrell
46. M. J. Skinner

EXTERNAL DISTRIBUTION

47. R. F. Bacher, California Institute of Technology
48. G. E. Thoma, USAF
49-98. Army Chemical Center, Maryland
99-347. Given distribution as shown in TID-4500 under Instrumentation Category

DISTRIBUTION PAGE TO BE REMOVED IF REPORT IS GIVEN PUBLIC DISTRIBUTION

CLOUD CHAMBER FOR MEASURING THE PARTICLE DENSITY OF AN AEROSOL

Bernard G. Saunders

PURPOSE

This report summarizes the work[1] performed in setting up and calibrating a continuous-action cloud chamber which determines the number of particles in a unit volume of aerosol.

STATUS

The Green continuous-action cloud chamber has been placed in operation and calibrated. It was found suitable for measuring aerosol particle concentrations, regardless of particle-size or size-distribution, in the approximate range of 5×10^4 particles/cm^3 to 2×10^6 particles/cm^3, with an accuracy of 5.2 percentage standard deviation when a total of 500 particles is counted.

INTRODUCTION

Reviewing the literature for all the methods that have been developed for counting aerosol particles, it soon becomes apparent that the cloud chamber method is unique. Particles may be counted (a) regardless of their minuteness, and (b) independently of their size-distribution. Most counting methods depend on a characteristic property of the gross sample, such as weight, radiation absorption or scattering, radioactivity, etc., whereas the cloud chamber method permits the observer to count the particles discretely, even though they may be of milli-micron size.

In connection with some aerosol studies at this laboratory, it was found desirable to measure particle concentrations of a number of aerosols composed of particles in the sub-micron range. A cloud chamber similar to the one

---

(1) This work was performed under Contract W-7405-eng-26 during FY-1953.

designed by H. L. Green[2] would satisfy this need, and it was our good fortune to be able to borrow this cloud chamber from the inventor. Thus we were able to use this method of counting particles almost immediately, and to evaluate the cloud-chamber method before building a cloud chamber of our own.

Since a detailed description of Green's instrument may be found in the references already cited, only a brief review will be presented here.

APPARATUS

The side and top views of the Green apparatus are shown in Figs. 1 and 2, respectively. A diagram, Fig. 3, taken from Green's paper, is useful in explaining the principle of operation. When the operation is in the phase of the cycle shown, a partial vacuum at Q draws the aerosol through valve D into expansion chamber A and observation cell C. Cams E and F are on the same shaft and rotate uniformly in a counter-clockwise direction with a two-second period. As the cam E rotates, the piston B is lifted, closing the outlet Q. At the maximum displacement of the cam, the inlet valve D also closes. Thus the aerosol is trapped in the chamber and cell at the pressure of the aerosol reservoir which is connected (but not shown) to valve D. The entrapped aerosol quickly becomes saturated with water vapor by virtue of damp blotting paper lining the cell walls and inlet tubing. The roller K next makes a swift descent on the cam to the circular part, carrying the piston with it. The gas and water vapor in the chamber and cell expand adiabatically, or almost so, and are thereby chilled. The water vapor is condensed out onto the aerosol particles into the form of water droplets suspended in the gas.

While the roller travels along the circular part of the cam, valves D and Q remain closed, thus permitting the droplets to remain undisturbed during a one-second period of observation. During the remainder of the cycle, piston B drops sufficiently to open port Q, and cam F opens valve D.

---

(2) Whytlaw, R., Gray and H. S. Patterson, "Smoke," Edward Arnold and Company, London 1932.
Green, Henry L., "On the Application of the Aitken Effect to the Study of Aerosols," Phil. Mag. 4, 1046 (1927).

Droplets in the cell are illuminated and photographed by means of an ultramicroscope technique. The path of the rays of light may be seen in Fig. 2. A diagram of the optical system is shown in Fig. 4. The image of the slit is focussed on the center of the cloud chamber by a microscope objective having a focal length of 25 mm and a numerical aperture of 0.30. Droplets suspended in the region of the chamber traversed by the rays are thus illuminated. The height and depth of the region traversed by the rays, of course, depend on the size and shape of the slit opening. Each droplet scatters the incident light in all directions so that the droplet may be seen from any angle. In this apparatus, the camera axis is set at a right angle to the axis of incident illumination. The plate holder can be shifted up and down and sideways, allowing one to make a series of 91 photographs on one 3 1/4" x 4 1/4" film as in Fig. 5. A highly magnified photograph of one exposure is shown in Fig. 6. A shutter between the plate holder and camera lens is manually operated, but pictures can be taken as frequently as every two seconds if necessary.

The developed film is next placed under a microscope having a reticle in the eyepiece, and one of the photographs is brought into focus. A network of squares is observed on the photograph. The particles in a given number of squares are counted. Knowing the volume of aerosol represented by the squares, the number of droplets or particles per unit volume is readily ascertained.

The cloud chamber was received along with the photographic lens, microscope objective and slit that were described in Green's paper. The arc lamp and condensers were missing.

Green had used a 10-amp Zeiss arc, presumably D.C., to illuminate the cloud chamber droplets. This laboratory is not wired for direct current, an unfortunate circumstance, since a D.C. arc is much brighter than an A.C. arc, and a high light output is necessary for right-angle scattering. Instead, a Bausch and Lomb microscope carbon arc with built-in condenser was operated at a current of 4.5 amp on A.C. A 2", f/4.5 photographic objective was used for an auxiliary

condenser. The arc, slit and condenser were spaced to give maximum light by the Koehler method (i.e., image of the arc condenser was focussed on the slit). Although droplets could be seen plainly through the window of the cell, they were too faintly illuminated to give good definition on Super Panchro Press Type B cut film when exposed for 1/25 sec. A 40-watt Fish-Schurman Micrographic Lamp ("Zirconarc") was substituted for the carbon arc and auxiliary condenser. Whereas the carbon arc gave a reading of 20 units on a Weston exposure meter placed near the cell in the beam of incident light, the zirconium arc gave a reading of 30 units. The zirconium arc was used thereafter because of its greater intensity and reliability.

One feature of operation of the cloud chamber that gave a great deal of trouble and concern, as it had to Green, was droplet motion in a downward direction during exposures. Green solved this problem by admitting a slow stream of air through a hose and pinch clamp attached to T, Fig. 3, so that the counter-current of air would waft the particles in an upward direction. By carefully adjusting the pinch clamp, equilibrium could be obtained for a fraction of a second during each expansion so that an exposure could be made. The clamp proved to be inconvenient because of the frequent and fine adjustments that were necessary. A needle valve was thereupon substituted, which proved of great advantage.

At first it was thought that the droplets fell because of the gravitational field. An 8-sided glass prism was placed between a 10x eyepiece and the photographic lens(3). This was rotated at a sufficient speed to make the droplets appear motionless. Knowing the speed of rotation of the prism, a speed the order of 1.4 cm/sec was obtained for droplets condensed on NaCl nuclei. For water droplets falling in air with this speed, Stokes' law gave a radius of 10^{-3} cm, a radius about twenty times larger than predicted by dividing the calculated amount of water condensed during an expansion by the total number of

(3) Saunders, Bernard G., "Rotating Prism for Use With Cloud Chambers," ORNL 1657.

droplets observed. In a later experiment with another cloud chamber operated in an inverted position, it was found that the droplets moved upwards with apparently the same speed. Evidently turbulence or some other effect associated with the chamber was influencing the motion of the droplets.

CALIBRATION

Green estimated that the various steps in calibrating the cloud chamber and obtaining a calibration factor may introduce a total error in the final result as much as ten percent. The calibration factor, of course, is that number which multiplied by the number of droplets observed in a given number of reticle squares determines the total number of particles per unit volume. Considerable time and effort were spent on the apparatus getting the calibration factor and determining its reliability. An account of the difficulties and how they were overcome comprises the balance of this report.

Fig. 7a shows how the rays from the microscope objective are focussed to produce the real image S' of the slit. All particles that are resident in the volume bounded by the marginal rays will be illuminated. Of these, the ones within the field of view BCB'C' of the camera will be photographed, giving a picture similar to Fig. 7b. If the picture is now examined under a microscope with a reticle ruled with a square grid, then one may count the number of droplets in a given area, say bcb'c'. This area times the depth of the beam gives the volume of the space occupied by the particles. However, this volume is an expanded volume, and one must therefore multiply the number by the expansion ratio of the cloud chamber to get the true number of particles per cc.

The greatest source of error in obtaining the calibration factor proved to be the measurement of volume -- the product of area and beam depth. The methods used in determining area and beam depth will now be considered.

Area

In order to compute the area of the beam in the cell that is represented by the area bcb'c', Green determined two things: (a) the number of times the

true area of the beam was magnified on the film, i.e., the magnifying power of the camera, and (b) the area of film bounded by a reticle square. He found that the linear magnification in the camera was 2.44 and that each square was 0.043 cm on a side. Thus the actual area of beam being measured for 40 squares was

$$\frac{40x\ (0.043)^2}{(2.44)^2} = 0.0012\ cm^2 .$$

It was decided at first to use Green's method of calibration. First, (a), the magnifying power of the photographic lens was measured. The cell was removed from the cloud chamber and a small section of mm graph paper was mounted perpendicular to the camera axis and coplanar with the axis of the light beam that was used for illuminating the droplets. A photograph of the mm squares was taken in the normal manner, care being exercised not to disturb the photographic lens. The picture of the graph paper was then placed under a Cenco-Gaertner measuring microscope (magnification about 30x). A series of ten measurements gave a value of 2.41 ± .02 mm for the length of a square. The actual length of a square of the mm graph as measured by the same microscope gave a value of 1.000 ± .001 mm. Thus the magnification of the camera lens was found to be

$$M = 2.41 \pm 02 .$$

It was estimated that the perpendicular distance, a, between the camera lens and the axis of the light beam during photography of the droplets would not differ from the distance between the camera lens and the graph paper by more than one millimeter, that is, $\Delta a \leq \pm 1$ mm.

To see how the magnification is affected by a small increment in a, one can use the simple lens formula

$$M = f/(a-f) . \qquad (1)$$

Substituting the known values $M = 2.41$ and $f = 75$ mm, one gets $a = 106$ mm. Upon differentiating Eq. 1 and solving, the equation

$$\Delta M = - \frac{f}{(a-f)^2} \Delta a = 0.08 \qquad (2)$$

results. Hence

$$M = 2.41 \pm .08 \ .$$

Now $.08/2.41 = 3.3\%$, that is, a displacement of 1 mm will make the magnification vary by 3.3%. But M^2 is used to determine the volume occupied by the droplets. The percentage error is 6.6%. If M^2 is to be known as accurately as 1% (or 0.5% for M) then $\Delta a \leq 0.17$ mm. This may be seen upon dividing Eq. 2 by Eq. 1, or

$$\frac{\Delta M}{M} = \frac{1}{a-f} \Delta a \ .$$

Since $\Delta a = 1$ mm for $\frac{\Delta M}{M} = .03$, $\Delta a = \frac{.005}{.03} \times 1 = 0.17$ mm.

The second source of error in measuring the area comes in (b), determining the area of the film bounded by a reticle square. This area requires one to know the magnifying power of the microscope that is used in counting the particles.

A method was found to measure the area of the film being surveyed without knowing the magnification of either the camera or the microscope. A microscope stage micrometer (a microscope slide engraved with a calibrated scale) was placed in the same plane as that to be occupied by the droplets and was then photographed under the same magnification. By laying the photograph of the micrometer scale over a photograph of the droplets and examining them together under a microscope, the actual distance between any two points of the beam area could be read directly. The advantage of this method was that the microscope did not have to be calibrated, thus eliminating this source of error.

The technique for placing the micrometer scale in the exact plane of the light beam so that minimum error in a was introduced will now be described.

A mount for the micrometer slide was made to fit in the place of the cell of the cloud chamber (Fig. 8). A cutback was made in the mount to allow the micrometer scale to fall at the exact intersection of the camera and light beam axes. A hole was drilled at right angles to the center line of the mount so that a bakelite plug could be inserted. The bakelite plug was drilled along its axis with a hole 0.020" D. When the mount was turned in one position the hole in the plug was concentric with the paraxial rays from the microscope objective from which the light beam emerged; turned through 90° it was concentric with the axis of the camera lens.

The slit was narrowed to a small square aperture and its image was centered and focussed on the hole of the bakelite plug by adjusting the mount holding the microscope objective. It was estimated that the center of the beam could be relocated within 0.001" or 0.025 mm, if for some reason the setting of the microscope objective had been disturbed. That is, the parameter, a, could be kept to within $\Delta a = \pm .025$ mm.

Next, a Zeiss stage micrometer slide was placed on the mount. The micrometer scale itself was 2 mm long, with 200 subdivisions -- a line-spacing of 10 μ. No information was available from Zeiss Company regarding the accuracy of the ruling. The mount was rotated to a position where the incident beam grazed the surface of the slide and where the slide faced the camera. The bakelite plug was removed and a microscope lamp was placed to shine through the hole in the mount. This illuminated the micrometer slide on the back side. The rulings appeared to be black on a bright background when looked at through the camera. By placing a cardboard diaphragm between the lamp and the mount but slightly to one side, light was refracted in the rulings and gave a bright image on a dark background. The latter method of lighting proved to be best for maximum film resolution. A ground glass was placed in the plane usually occupied by the film emulsion and a 10x ocular was focussed on it. The camera

lens was next focussed on the micrometer scale until the aerial image of the scale at the ground glass was sharp as seen through the ocular. Photographs of the micrometer were then taken at this setting of the camera lens and also at adjacent settings to confirm that this setting gave the image of sharpest focus. In this manner, a "calibration" film was obtained. Photographs were made on du Pont Hi-Speed Pan and Eastman High Resolution Contrast Ortho. Both types of film were developed simultaneously in D-11 and in D-72. The resolution was extremely poor and unsatisfactory when using Hi-Speed Pan.

It is interesting to note that several dust particles from the laboratory were impacted on the slide. They varied in size from about 1 μ to 10 μ (one micrometer division). Particles were visible on both types of film but were sharper, as one might expect, on the High Resolution film.

The calibration film was measured under the traveling microscope -- not to determine the camera magnification, since this was no longer necessary, but to see how closely the magnification checked with that already obtained. Because of the increased resolution using the Contrast film, it was possible to center the cross-hairs of the microscope more accurately for measurement. The value obtained in this manner was $M = 2.390 \pm .005$, which agrees with the other observed value of $M = 2.41 \pm .02$.

Depth

It was found that the measurement of beam depth introduced the largest error in calibrating the particle density. In Fig. 7 it can be seen that due to the finite size of the microscope objective the marginal rays produce a cone of light rays which do not focus to a point and which therefore do not have a cross-section identical in shape to the shape of the slit. Consequently, the depth of the beam increases non-uniformly on either side of the focal plane. Green's method of measuring the depth of the beam was to rotate the slit 90° so that the depth could be photographed and measured on the film. The average depth was ascertained by taking a number of measurements over the area in which

counting was done.

Green's method was attempted at this laboratory, but with little success. The film was viewed under 20x magnification and the calibration film was used to measure the depth at the focal plane, or narrowest constriction of the beam, and at the sides. Because the image was so diffuse at the boundary of the beam it was impossible to measure the depth with an accuracy better than about 10%. Since the depth was a measure of the volume, any error in it affected the accuracy of the count. Two other methods for obtaining the depth were tried as follows:

(a) The cell was removed and the stage micrometer and mount were set in its place. The measuring (traveling) microscope was aligned so that it pointed along the axis of the beam of light emitted by the slit. The microscope was focussed on the micrometer scale. By focussing the microscope objective of the Green apparatus the image of the slit was brought into sharp focus in the plane of the micrometer rulings. Thus it was simple to read the depth of the center of the beam at the exact position where particles were normally photographed. The slit was opened further by 100 divisions and the depth measured. The average of several trials gave a value of $D = 0.57 \pm .003$ mm for the depth of the beam used in photographing the droplets. Next, the spread of the cone of light was determined. The micrometer slide was turned over which placed the rulings .054" (about 1.3 mm) closer to the measuring microscope. The measuring microscope was refocussed on the rulings. When the rulings were centered on the old position, exactly 100 divisions of the micrometer were illuminated and made visible. At the new position, 106 divisions were visible. This increase, of course, was due to the spreading cone of light, since the slit was maintained in focus at the center position. Thus the cone spread 6% on either side of the focal or median plane at a distance of 1.3 mm. Examination of several photographs made previously showed that the area under consideration was covered by

5 reticle-widths on either side of the focal plane when observed under 20x magnification of the photograph. Using the calibration film it was observed that 5 squares = 0.625 ± .005 mm -- about half of the distance measured on the cone. That is, the beam spread 3% over the area considered, or an average of 1.5%. By this method, then, the average depth was only 1.5% greater than the depth taken at the focal plane.

(b) The second method depended on a direct measurement of the beam. The cell was placed into position and the measuring microscope was placed to look down into the cell and straddle the light beam from the slit. The depth could then be measured by moving the cross hairs of the microscope across the beam. For this observation tobacco smoke was trapped in the cell so that the beam would be continuously defined. Measurements were made at the focal plane of the beam. In order to measure the depth on either side of the focal plane it was necessary to move the microscope axis along the beam axis (off center) 1.25/2 mm. This was accomplished by laying a 1 mm (20 sub-division) micrometer scale on the top window of the cell. The measurements were made as follows: The microscope was centered over the narrowest part (the focal plane) of the beam. The width -- that is, the depth -- of the beam was measured, the microscope tube was withdrawn to focus on the micrometer, the microscope axis (i.e., carriage and frame) was moved 0.625 mm along the micrometer and beam, the tube was lowered to focus on the beam and the beam depth was measured again. This was repeated a number of times, each time closing the slit, opening it exactly 69 divisions, centering the cross-hairs on the focal plane of the beam, etc. This gave a final average result in mm of D = .637 ± .015 or .637 ± 2.4%.

Comparing the results of the first measurement of the depth of the cone with the second we have

1st: D = 0.58 ± 0.003 mm

2nd: D = 0.637 ± 0.015 mm

The second value was chosen because it represented the depth of what was actually photographed.

EXPANSION

One measures the number of droplets per unit volume of expanded air. What is wanted, of course, is the number per unit volume of air at normal pressure. It is therefore necessary to know the degree of expansion of the air in the chamber. If α represents the ratio of the new volume to the old, then one must multiply the measured concentration by this factor to obtain the true concentration.

Green determined the relative expansion of the chamber by measuring pressure changes with a manometer and measuring the internal diameter of the cylinder and the stroke of the piston.

In this investigation it was decided to find the true volume of the system by measuring the quantity of water it would hold. In the cell that was furnished with the equipment, the top of the cell was joined to the valve cylinder by a tube bent at right angles (see Fig. 9a). In this investigation, a new cell was made with a hole in the top for a window and a side-arm to join the valve cylinder (see Fig. 9b). Leaving off the window made it possible to fill the chamber and cell with water and yet allow the displaced air to escape. A 25 ml burette was connected to the chamber by a capillary tube attached to A in Fig. 3, where normally the leak valve was attached. The intake and discharge valves were closed and the piston head was lowered to the position occupied when expanded and droplets were photographed. A cover glass was greased and placed over the window hole, but off-center to permit the escape of entrapped air. The volume of the capillary tube was also measured by this method. The total volume amounted to $12.47 \pm .02$ cm^3.

The chamber normally uses four blotters, 1/2" x 1" each, lining the inside. By weighing a large piece of blotter of known area, both wet and dry, it was found that the volume occupied by the blotter when wet and dry varied between

$0.167 \pm .001$ and $0.299 \pm .029$ cm^3. The volume therefore depended on how long the blotter has been saturated before use. The best value was the mean, or $0.233 \pm .021$ cm^3.

The total volume was therefore

$$V = 12.47 \pm .02 - 4\ (0.233 \pm .02)$$
$$= 11.54 \pm .08\ cm^3\ .$$

The inside diameter of the cylinder and stroke of the piston were measured with micrometers. The volume was calculated to be $S = 4.1824$ cm^3.

The exapnsion ratio was calculated as follows:

$$\alpha = \frac{V}{V-S}\ ,$$

where V is the volume of the chamber after expansion, and S is the volume displacement of the piston.

Using the values quoted and the method of least squares, the expansion ratio became $\alpha = 1.52 \pm 02$.

PARTICLE COUNT

If particles are distributed randomly throughout the volume of the cloud chamber, it can be shown that a sample containing N droplets should have a standard deviation from the mean of $\sqrt{N}$, or a relative error of $\frac{\sqrt{N}}{N}$.

A test similar to Green's was made to determine whether the droplets in the sample volume were randomly distributed. This was done by seeing if they were randomly distributed over the counting area.

Five separate photographs of droplets condensed on NaCl nuclei were examined under 20x magnification. In the 10x eyepiece was a reticle, each square being approximately 0.06 cm on a side. An area of 12 squares on each photograph was observed.

The particle count in each square ranged from 0 to 5 and was as follows:

Photograph No. 1	Photograph No. 2	Photograph No. 3	Photograph No. 4	Photograph No. 5
1 0 0 1	1 0 0 2	0 1 1 2	1 2 0 2	0 1 0 3
2 0 3 0	1 0 0 2	2 3 2 1	2 5 1 3	3 3 1 0
2 0 0 0	4 1 2 1	4 0 0 3	1 3 2 3	3 2 3 4

This gave a total of 90 particles for n = 60 squares, an average m of 90/60 = 1.5. The observed frequencies $Y_r(0)$ for r = 0, 1, 2, 3, 4, and 5 droplets were, respectively, 18, 14, 13, 11, 3, 1.

According to Poisson, the calculated frequency of distribution of r droplets in one square is $e^{-m} m^r/r!$, or for all n squares $Y_r(C) = ne^{-m} m^r/r!$.

In tabular form:

r	$Y_r(0)$	rY_r	$Y_r(C)$	C-O	$\chi^2 = \frac{(C-O)^2}{C}$
0	18	0	13	5	1.92
1	14	14	20	-6	1.8
2	13	26	15	-2	2.67
3	11	33	8	3	1.1
4	3	12	3	0	0
5	1	5	1	0	0
	60	90	60		$\chi^2 = 7.5$

Thus comparing observed $Y_r(0)$ and calculated $Y_r(C)$ counts, one finds in a chi-square table that the probability of a greater value than $\chi^2 = 7.5$ is between .10 and .20. This means that one can say with between 80% and 90% confidence that the counts on the squares, or droplets in the volume, were random.

The following data were used in calculating the number of droplets per cm^3.

Expansion ratio α = 1.52 ± .02

Beam depth D = 0.0637 ± .0015 cm

Reticle-square length L = 0.0125 ± .0001 cm

The volume of a parallelopiped one reticle square in cross-section and D cm deep was L^2D. Since n squares were used in counting, the total volume was

nL^2D. The total volume before expansion was, therefore, nL^2D/α .

Since this was the volume occupied by N droplets, then the density, d, or number of particles per unit volume, was

$$d = N\ \alpha/nL^2D\ .$$

At least squares method was used to find the accuracy of measurement. If a function is $M = f(M_1, M_2, M_3)$ and the errors of M_1, M_2, M_3 are respectively μ_1, μ_2, μ_3, then the combined error E is

$$E^2 = \mu_1^2 \left(\frac{\partial M}{\partial M_1}\right)^2 + \mu_2^2 \left(\frac{\partial M}{\partial M_2}\right)^2 + \mu_3^2 \left(\frac{\partial M}{\partial M_3}\right)^2 + \ldots \quad . \qquad (3)$$

In the equation

$$d = N\ \alpha/nL^2D, \text{ let } N/n = N'\ ,$$

where N' has the meaning "number of droplets per square."

Then, $d/N' = \alpha/L^2D$. Setting $M = \alpha/L^2D$, $M_1 = \alpha$, $M_2 = L$ and $M_3 = D$, Eq. 3 can therefore be written

$$E^2 = \mu_\alpha^2 \frac{1}{L^4D^2} + \mu_L^2 \frac{4\ \alpha^2}{L^6D^2} + \mu_D^2 \frac{\alpha^2}{L^4D^4} \quad .$$

Substituting the values

$$\alpha = 1.52 \qquad \mu_\alpha = 2 \times 10^{-2}$$

$$L = .0125 \qquad \mu_L = 1 \times 10^{-4}$$

$$D = .0637 \qquad \mu_D = 1.5 \times 10^{-3}$$

one gets

$$E = 4 \times 10^3\ .$$

Since $d/N' = \alpha/L^2D \pm E = 1.53 \times 10^5 \pm .04 \times 10^5$, the percent error in d/N' is $.04/1.53 \times 100\% = 2.6\%$, or

$$d = 1.53 \times 10^5\ N' \pm 2.6\%\ .$$

Since N is accurate to $\frac{\sqrt{N}}{N} \times 100\%$, the number of particles per cm^3 is

$$d = 1.53 \times 10^5 N' \pm \sqrt{.026^2 + N/N^2} \times 100\%$$

$$d = 1.53 \times 10^5 N' \pm \sqrt{6.8 + 10{,}000/N}\ \% . \qquad (4)$$

If the total number of particles counted from several photographs is

$$N = 500 ,$$

then d will be known within 5.2%.

In practice, the cloud chamber was attached to the source of aerosol particles. The blotters in the chamber were moistened. The droplets were observed through the ocular to ascertain whether the instrument was working properly. A guess was made as to the number of photographs that would be required to give a total count of 500 droplets. A generous number of photographic exposures were then taken, since some exposures were expected to be faulty due to motion of the droplets.

After development, each photograph was scribed with a line down its center, corresponding to the focal plane. Each photograph was then observed under a 20-power binocular microscope and its center line was made to conincide with the center of the reticle in the microscope eyepiece. N particles were counted in an area 4-squares high and 5-squares on either side of the line, a total of n = 40 squares. This made it possible to determine N' particles per square. The other photographs were treated the same way until a total of 500 particles were counted. The average N' was then used in Eq. 4, which gave the concentration in particles per cm^3.

Since the concentration of particles in number/cm^3 observed in the cloud chamber is roughly 1.5×10^5 times the number of droplets counted per square, one droplet per exposure or 40 squares would correspond to 4×10^3. A reasonable number of droplets to count might be ten per exposure on ten photographs to give a total count of one hundred, 100 counts being accurate to within about

ten percent. Ten droplets per exposure would represent a concentration of 4×10^4 particles/cm^3, a figure which one might take as the lower limit. The upper limit would depend on the maximum number of droplets that could be counted per square -- roughly ten. This would correspond to a concentration of 1.5×10^6 particles/cm^3.

CONCLUSION

This laboratory has found the continuous-action Green cloud chamber to be an accurate and useful apparatus for measuring the number of particles per unit volume of aerosol. Every particle the order of 10^{-3} micron in radius or larger serves as the nucleus of a water droplet which can be photographed and counted. When a total of 500 droplets can be counted, the accuracy of the measurement amounts to 5.2 percentage standard deviation.

Aerosol concentrations can be measured from 5×10^4 particles/cm^3 to 2×10^6 particles/cm^3, a useful range in aerosol studies.

ACKNOWLEDGMENT

Members of this Project wish to express their gratitude to Mr. H. L. Green of the Chemical Defense Experimental Station, Porton, Wiltshire, for his extreme generosity and kindness in lending the continuous-action cloud-chamber equipment.

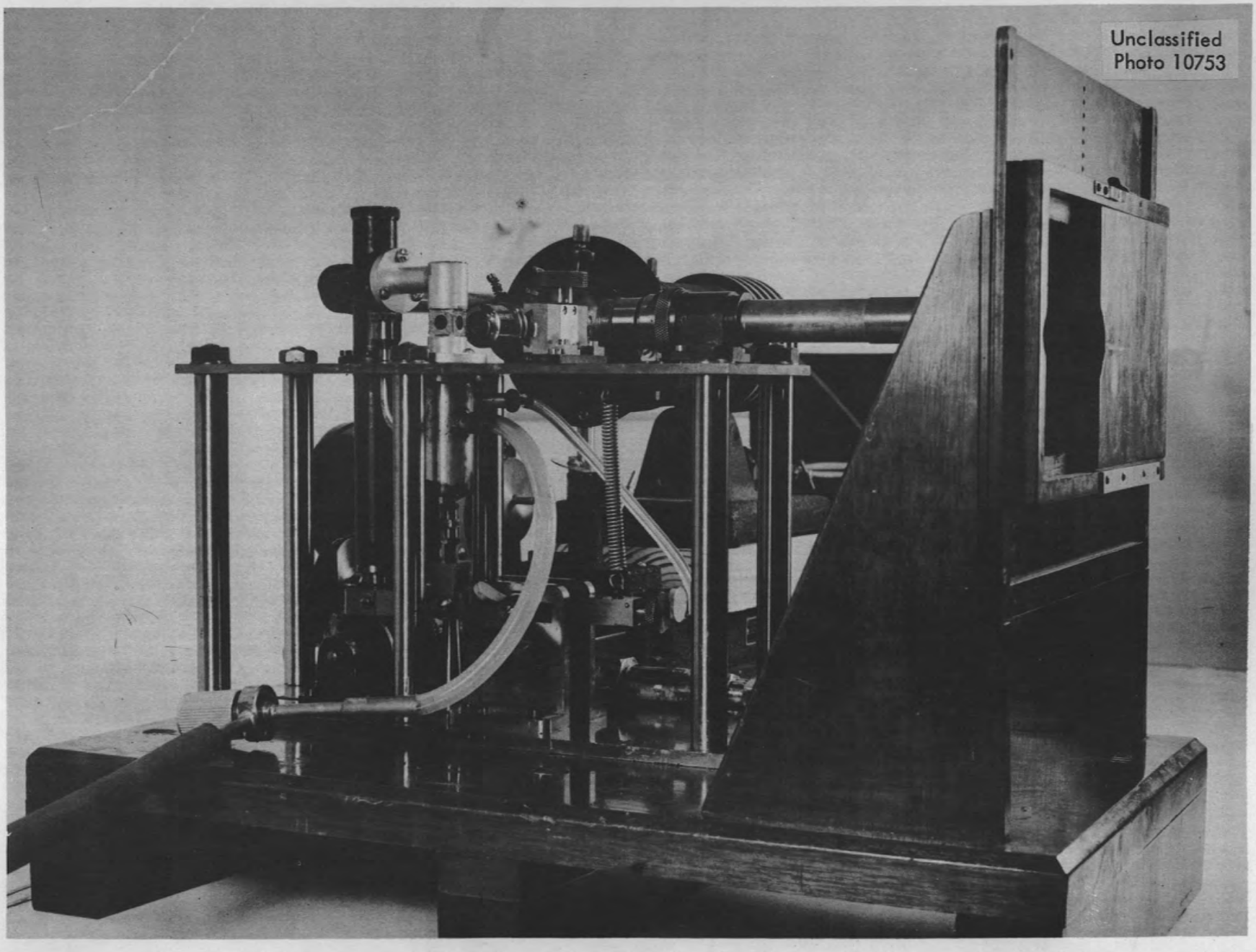

Fig. 1

Unclassified
Photo 10752

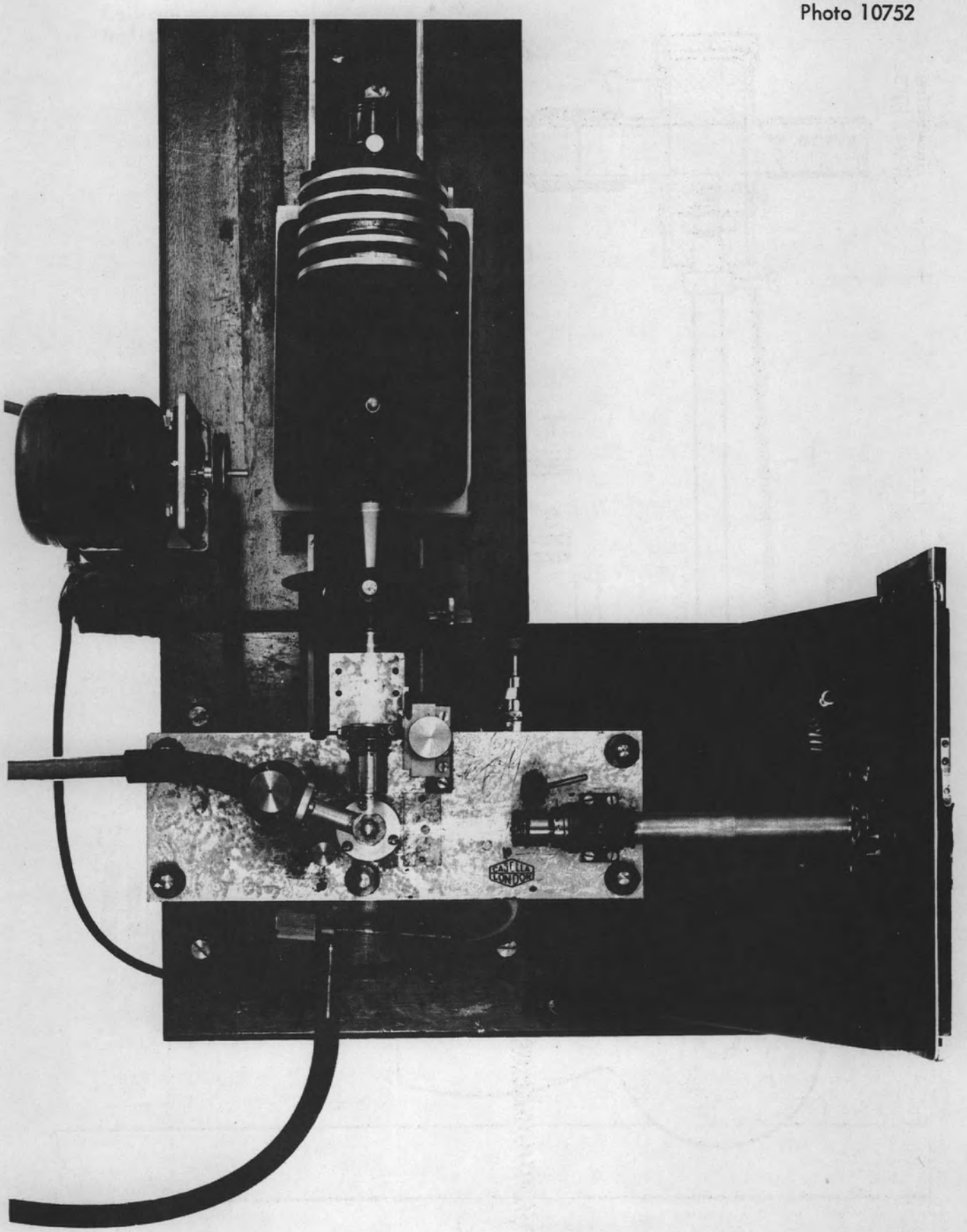

Fig. 2

Unclassified
Dwg. 21868

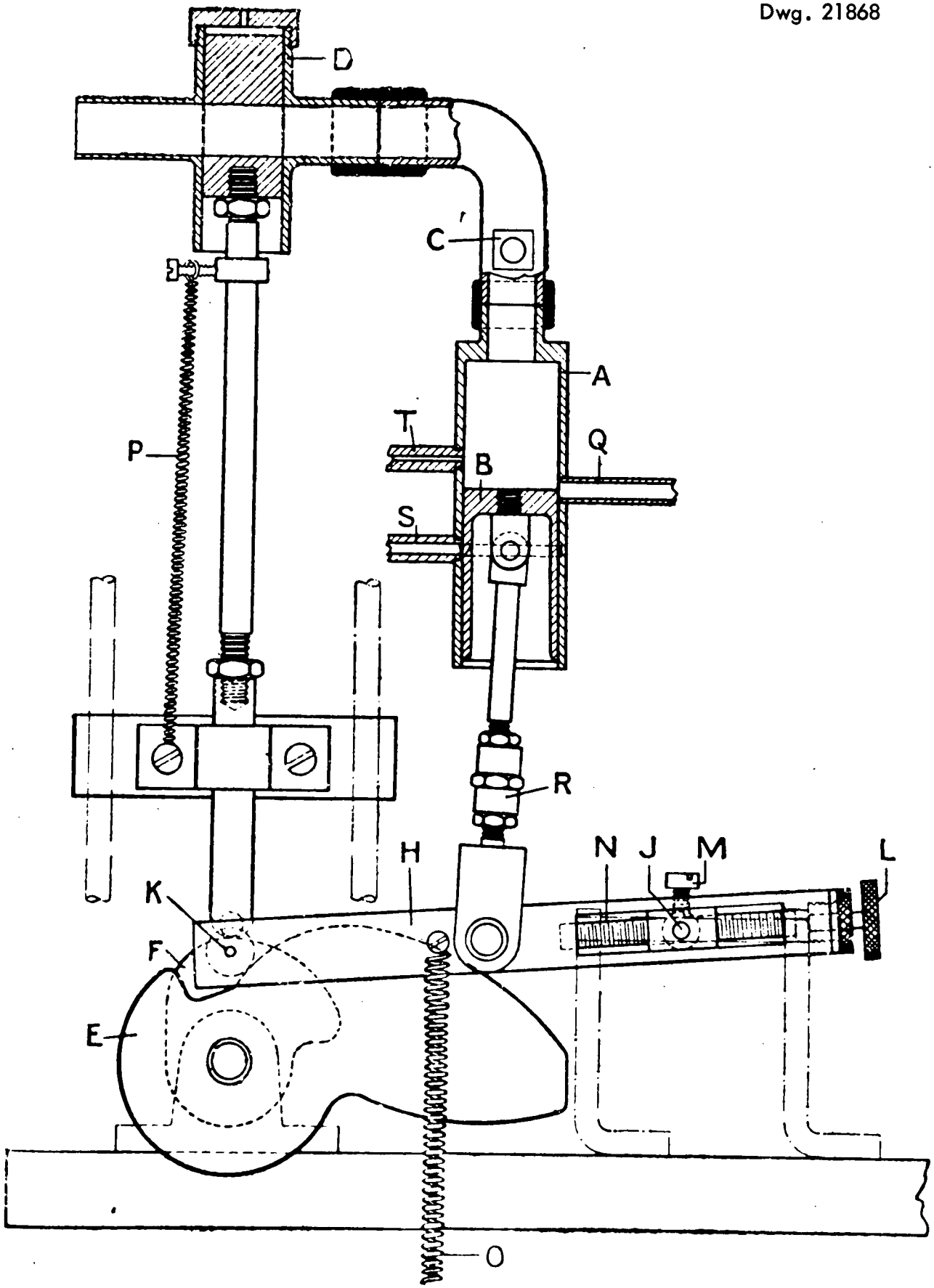

Fig. 3

Unclassified
Drawing # 21306

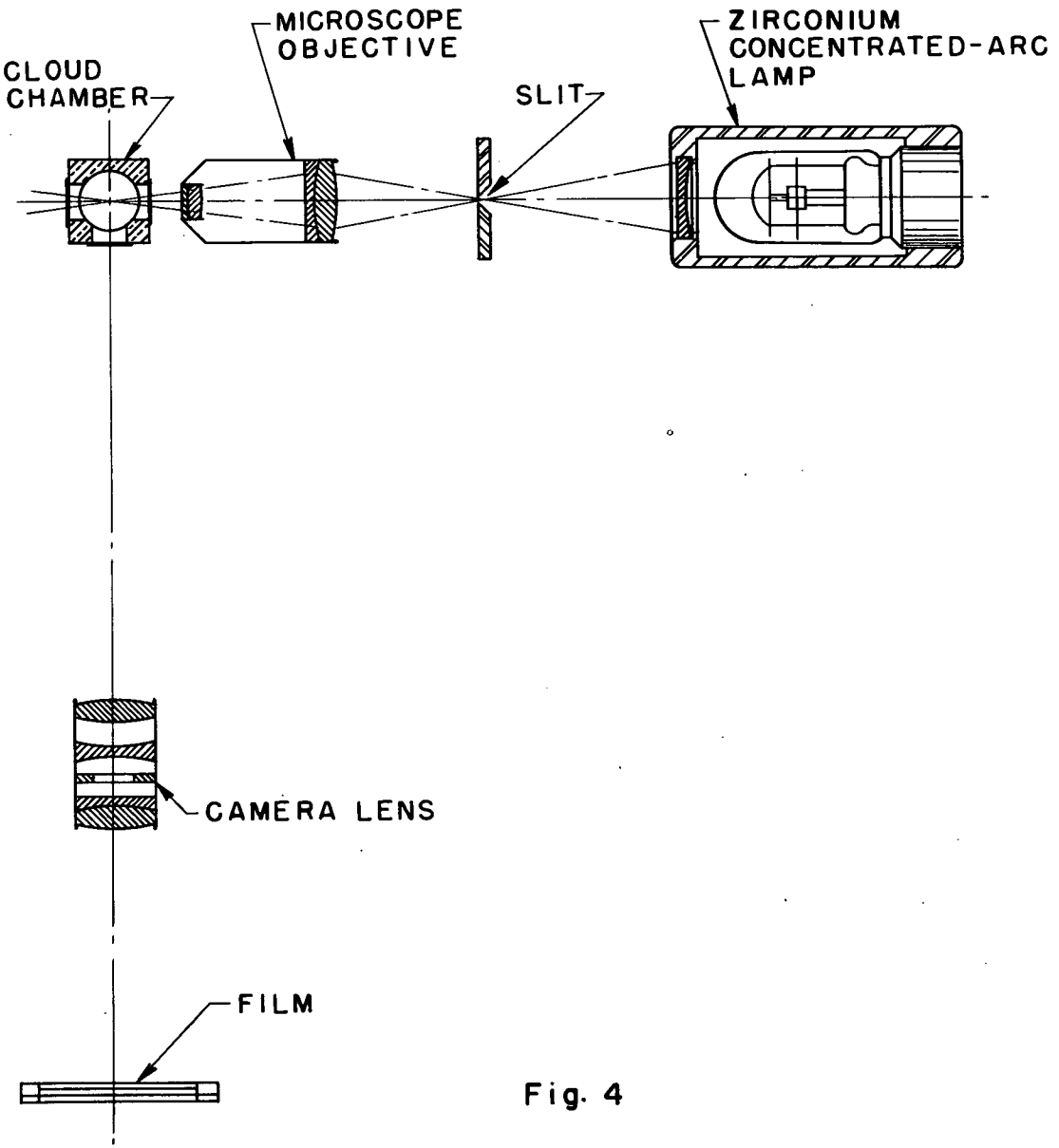

Fig. 4

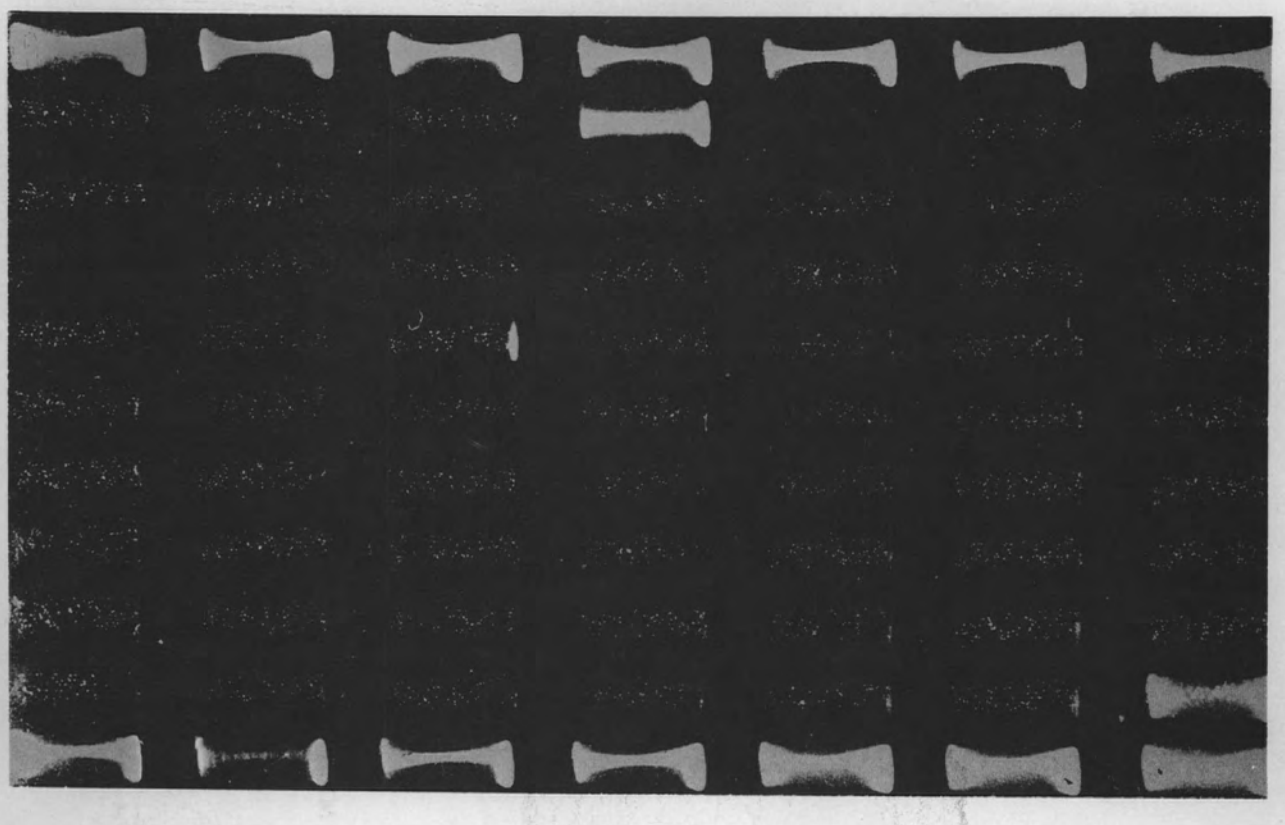

Fig. 5

Fig. 6

Unclassified
Dwg. 22710

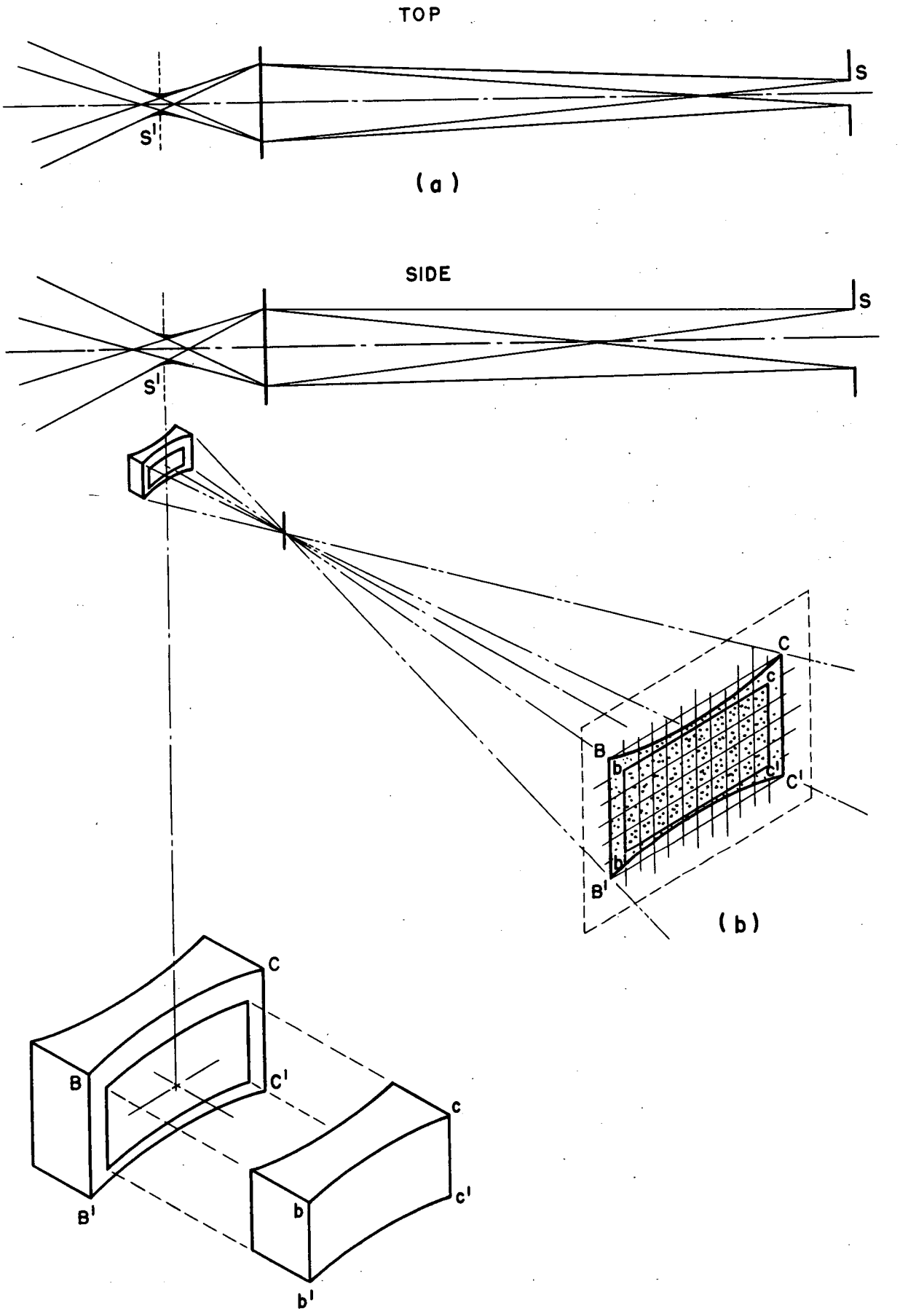

Fig. 7

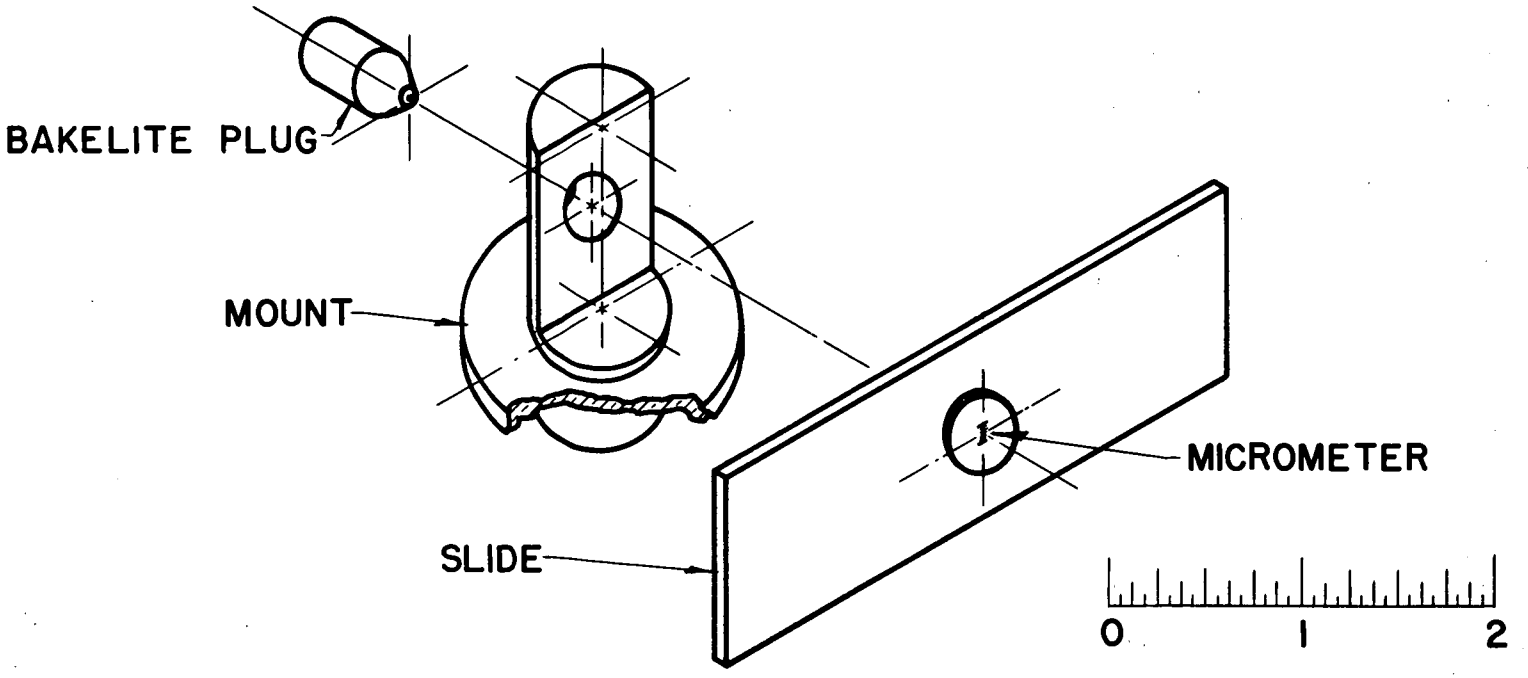

Fig. 8

Unclassified
Dwg. 22712

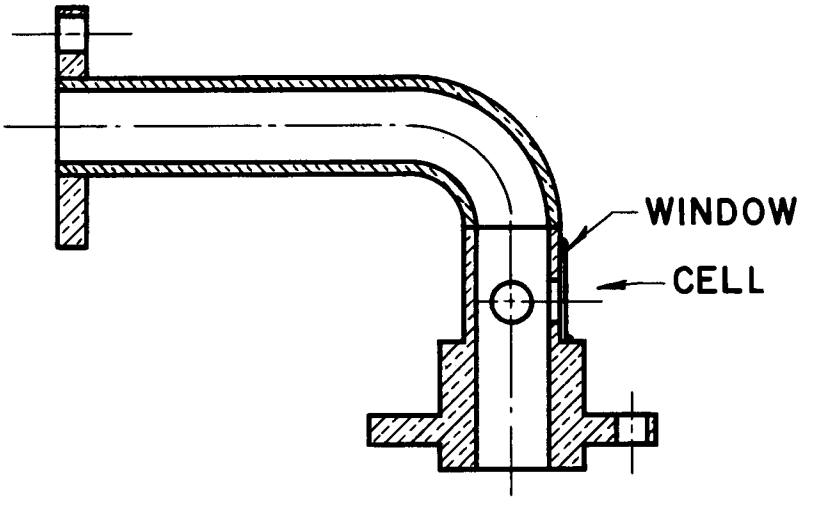

9 a

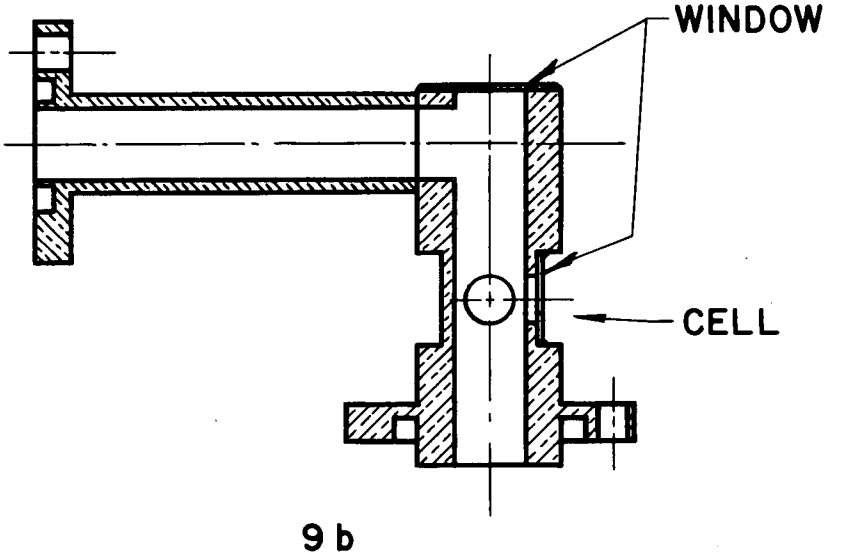

9 b

Fig. 9