CENTRAL RESEARCH LIBRARY
DOCUMENT COLLECTION

MARTIN MARIETTA ENERGY SYSTEMS LIBRARIES
3 4456 0360692 5

ORNL 1660
Instrumentation
Cy. 4

CENTRAL RESEARCH LIBRARY
DOCUMENT COLLECTION
LIBRARY LOAN COPY
DO NOT TRANSFER TO ANOTHER PERSON
If you wish someone else to see this document, send in name with document and the library will arrange a loan.

A SERVOMECHANISM FOR MEASURING AEROSOL PARTICLE SIZE AND A SERVOMECHANISM FOR CONTROLLING PARTICLE SIZE IN THE DIOCTYL PHTHALATE AEROSOL GENERATOR

R. L. Bradshaw

CONDUCTED JOINTLY BY

OAK RIDGE NATIONAL LABORATORY
HEALTH PHYSICS DIVISION
OPERATED BY
CARBIDE AND CARBON CHEMICALS CO.

RADIOLOGICAL DIVISION
CHEMICAL CORPS
CML. AND RAD. LABORATORIES
ARMY CHEMICAL CENTER, MARYLAND

ORNL-1660

Copy No. 4

Contract No. W-7405-eng-26

HEALTH PHYSICS DIVISION

A SERVOMECHANISM FOR MEASURING AEROSOL PARTICLE SIZE

and

A SERVOMECHANISM FOR CONTROLLING PARTICLE SIZE IN THE DIOCTYL PHTHALATE AEROSOL GENERATOR

R. Louis Bradshaw

PROTECTIVE EQUIPMENT EVALUATION PROGRAM

(In Cooperation with the Army Chemical Corps)

E. G. Struxness, Group Leader

DATE ISSUED

JAN 18 1954

OAK RIDGE NATIONAL LABORATORY
Operated by
CARBIDE AND CARBON CHEMICALS COMPANY
A Division of Union Carbide and Carbon Corporation
Post Office Box P
Oak Ridge, Tennessee

MASTER INSTITUTE ENERGY SYSTEMS LIBRARIES

3 4456 0360692 5

INTERNAL DISTRIBUTION

1. C. E. Center
2. Biology Library
3. Health Physics Library
4-5. Central Research Library
6. Reactor Experimental Engineering Library
7-11. Laboratory Records Department
12. Laboratory Records, ORNL R. C.
13. C. E. Larson
14. W. B. Humes (K-25)
15. L. B. Emlet (Y-12)
16. A. M. Weinberg
17. E. H. Taylor
18. E. D. Shipley
19. K. Z. Morgan
20. F. C. VonderLage
21. R. C. Briant
22. C. P. Keim
23. J. H. Frye, Jr.
24. R. S. Livingston
25. J. A. Swartout
26. S. C. Lind
27. F. L. Culler
28. A. H. Snell
29. A. Hollaender
30. M. T. Kelley
31. T. A. Lincoln
32. A. S. Householder
33. C. S. Harrill
34. C. E. Winters
35. D. W. Cardwell
36. J. A. Lane
37. E. E. Anderson
38. W. D. Cottrell
39. E. E. Grassel
40. B. G. Saunders
41. J. W. Thomas
42. E. G. Struxness
43. M. J. Skinner
44-45. R. L. Bradshaw

EXTERNAL DISTRIBUTION

46. G. E. Thoma, USAF
47. R. F. Bacher, California Institute of Technology
48-97. Army Chemical Center, Maryland
98-346. Given distribution as shown in TID-4500 under Instrumentation category

DISTRIBUTION PAGE TO BE REMOVED IF REPORT IS GIVEN PUBLIC DISTRIBUTION

CONTENTS

		Page
I.	ABSTRACT	1
II.	INTRODUCTION	1
III.	A SERVOMECHANISM FOR MEASURING AEROSOL PARTICLE SIZE	3
	A. Principles of Operation	3
	B. Discussion of Circuits	3
	C. Mechanical Details	7
	D. Servo-analysis of the System	8
	E. Results	13
	F. Conclusions	16
IV.	A SERVOMECHANISM FOR CONTROLLING PARTICLE SIZE IN THE DIOCTYL PHTHALATE AEROSOL GENERATOR	16
	A. Principles of Operation	16
	B. Discussion of Circuits	19
	C. Mechanical Details	21
	D. Servo-analysis of the System	21
	E. Results	21
	F. Conclusions	26
V.	APPENDICES	27
	A. Explanation of the Operation of the Photoelectric Owl	27
	B. Servo Owl Error Constant	30
	C. Correction for Stray Light	34
	D. Notes on Servo Owl	35

A SERVOMECHANISM FOR MEASURING AEROSOL PARTICLE SIZE

and

A SERVOMECHANISM FOR CONTROLLING PARTICLE SIZE IN THE DIOCTYL PHTHALATE AEROSOL GENERATOR

R. Louis Bradshaw

I. ABSTRACT

A servomechanism is described which continuously measures and records particle size of homogeneous aerosols in the range from approximately 0.1 μ to 0.2 μ radius. The principles of operation are explained and limitations of the instrument are discussed with suggestions for improving the operation. Circuit diagrams and pictures of the instrument are shown.

A servomechanism for controlling particle size in the dioctyl phthalate aerosol generator is described. The principles of operation are explained and results of tests of the mechanism on an analog of the generator are discussed. Reasons are advanced for the unsatisfactory operation of the instrument on the actual generator and suggestions for improvement are given.

II. INTRODUCTION

The purpose of the work described in this report was to develop a mechanism for measuring and controlling the particle size of a liquid aerosol (dioctyl phthalate) produced by a generator referred to as the DOP (dioctyl phthalate) generator.

The operation of this generator is as follows: Preheated air is passed over the surface of the DOP in a boiler operated at an elevated temperature. The DOP vapor-laden air is then fed to a mixing head where it is quenched with a stream of dilutant air which is at a much lower temperature. This causes the vapor to condense and form fine particles and for a given set of operating conditions the particle size is determined by the temperature of the quenching air.

The particle size output of the generator varies due to changes in line voltage, room temperature, and other factors which make it necessary that the operator maintain a close check on the particle size while conducting tests with the aerosol.

A servomechanism type of regulator was decided upon for automatic control of the particle size. This type regulator, commonly abbreviated "servo," has several advantages:

1. Particle size may be easily varied, (within the limits of the generator), by the manipulation of one control.

2. The steady state error between the desired and the actual particle size can be made very small.

3. The response of the generator may be speeded up considerably.

The DOP generator is normally operated in a region such that any particle size between approximately 0.1 μ and 0.2 μ radius may be produced. A device called the Visual Owl[1] (which will measure size within the same approximate limits) is used to measure the particle size. In order to continuously control particle size some method must be available for continuously and automatically determining particle size. Since light scattering methods seemed to be the only available means for continuously monitoring particles within the size range of the DOP generator, it was decided to use a modification of the Visual Owl.

The Naval Research Laboratory has developed a Photoelectric Owl[2] which seemed to suit the purpose admirably since this Owl is so designed that angular settings of the analyzer can be read to tenths of a degree. Since engineering drawings were available, prints were obtained of this NRL-M2 Photoelectric Owl and an instrument was built.[3]

This Photo Owl then became the heart of the system for particle size measurement on the DOP generator. Since the Photo Owl analyzers must indicate the correct particle size at all times a closed-loop servo was the natural choice for making the Owl fully automatic.

The Servo Owl is the error detector around which the DOP Servo Controller is built.

Both of the actual instruments described in this report are experimental models and consequently have many imperfections. Time limitations prevented making improvements, but an attempt is made to point out these imperfections.

---

1. Sinclair, David, Handbook on Aerosols, Washington, D.C., Atomic Energy Commission, 1950, Chapter 8, pp. 106-110.
2. Anderson, Wendell L. and Joseph K. Thompson, "Development of NRL Photoelectric Particle Size Meters (Owls)," Naval Research Laboratory, NRL Report 3808, May 28, 1951.
3. An explanation of the operation of the Photoelectric Owl may be found in Appendix A.

III. A SERVOMECHANISM FOR MEASURING AEROSOL PARTICLE SIZE

A. Principles of Operation

The basic principles of operation of all servomechanisms are the same, the major difference being the way in which various effects are achieved. The closed-loop system (servo) is an error operated device and tends to minimize the error at all times. Basically, its function is to control automatically a given quantity or process in accordance with a given command.[4]

In the Servo Owl the quantity to be controlled is the angular position of the analyzers, while the command is given by the size of the particles in the chamber of the Owl.

Figure 1 is a block diagram of the Servo Owl. The input quantity is, of course, the output (in terms of particle size) of the DOP generator. The output quantity of the Servo Owl is the angular setting of the Owl analyzers. The two phototube outputs are fed into a differencing circuit so that any difference between the actual analyzer angle setting and the analyzer setting which corresponds to the size of the particles being measured shows up as an error voltage. This error voltage is amplified and fed to a motor which is coupled to the analyzers through a gear train. The motor then runs in the proper direction until the analyzers are brought into a position corresponding to the size of the particles in the Owl chamber.

When the analyzers are properly oriented, both phototubes see the same amount of light and there is no error signal to drive the motor. If the particle size changes, then the analyzers are no longer in the correct position, the relative amount of light seen by each phototube changes, an error signal is produced, and this error signal drives the motor so that the analyzers are reoriented and a balance is again obtained.

B. Discussion of Circuits

The complete circuit diagram of the Servo Owl is shown in Figure 2.

Power Supply. A rectifier type power supply is used to supply the anode and dynode voltages to the photomultipliers and the plate voltage to the preamplifier stage. The rectifier circuit is conventional half-wave rectification followed by a choke input filter. Half-wave rectification with choke input filter produces a voltage spike in the output which may be detrimental to the performance of the servo. This design was chosen as a matter of expediency and should be corrected by replacement with a full-wave rectifier, choke input supply capable of supplying approximately 15 ma at 1250 vdc.

The regulator section of the supply is also conventional except for operating voltages and currents. All of the voltage regulator tubes are operated at currents of less than one ma while the 6SJ7 control tube draws only a few microamps at plate voltages as high as approximately 600 v. The series-

---

4. Brown, Gordon S. and Donald P. Campbell, Principles of Servomechanisms, New York, John Wiley and Sons, 1948, Chapter one.

Unclassified
Dwg. 22413

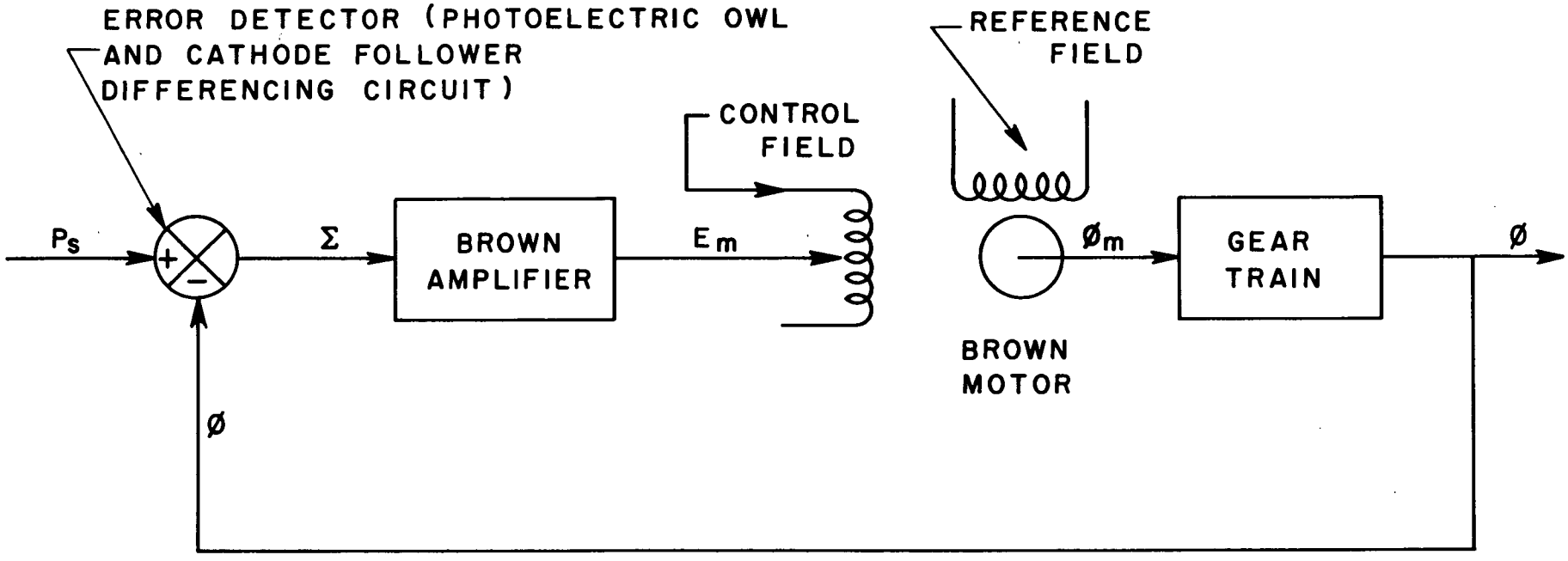

LEGEND:

Σ = ERROR VOLTAGE

E_m = CONTROL FIELD VOLTAGE

ϕ_m = MOTOR SHAFT ANGLE

ϕ = OWL ANALYZER ANGLE

P_s = INPUT PARTICLES

FIGURE 1. BLOCK DIAGRAM OF SERVO OWL

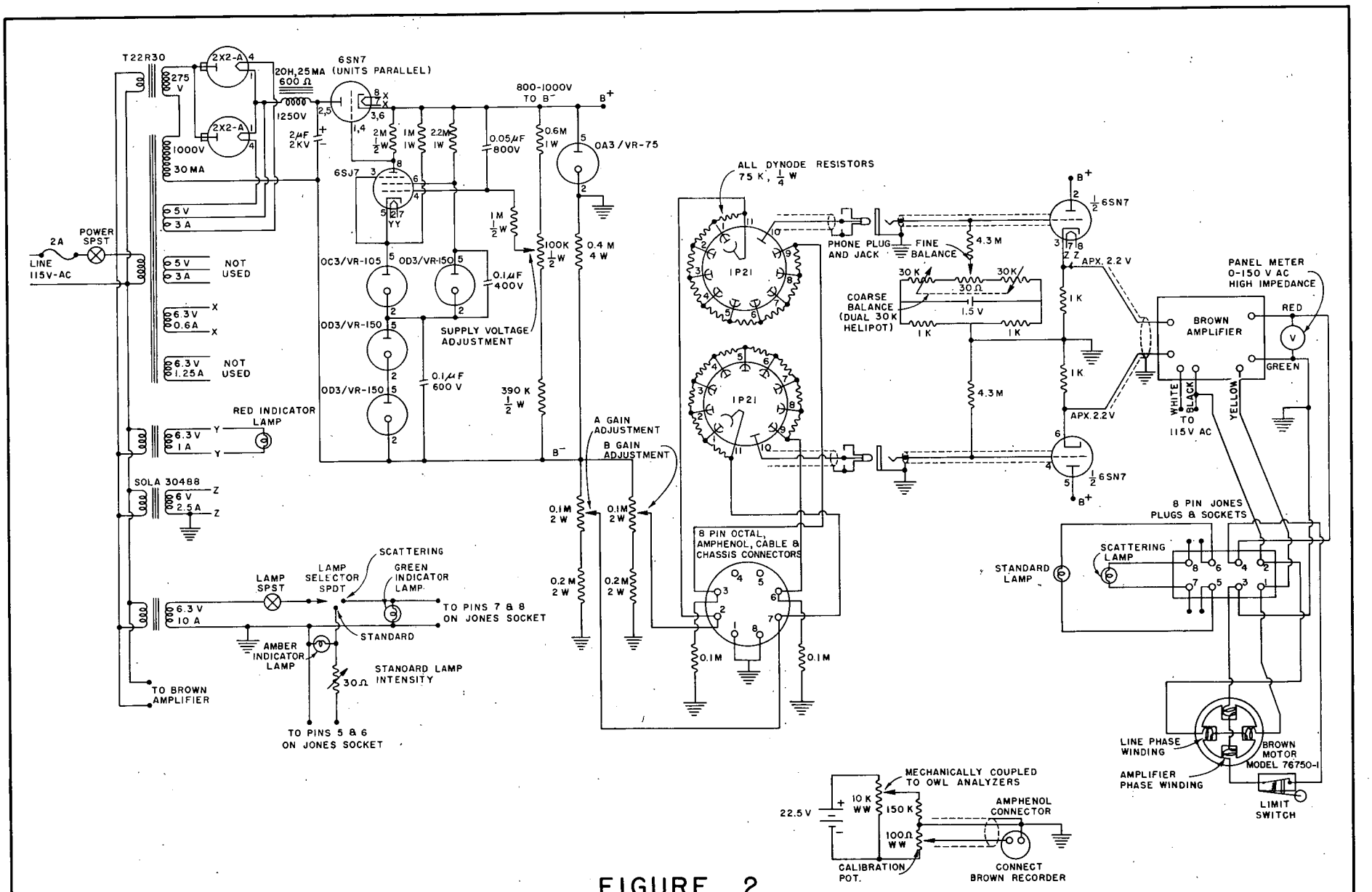

FIGURE 2
SCHEMATIC WIRING DIAGRAM FOR SERVO OWL

tube voltage exceeds rated value under conditions of minimum output voltage. Despite the unorthodox operating conditions, the regulator has performed well and has not given trouble.

The 0.4M resistor in series with the OA3 is to insure that there is enough current drawn through the OA3 to attain proper operation when it is in parallel with the preamplifier tube.

Below is a table giving data taken on the regulated supply. DC voltages were read on a model 260 Simpson meter. There was no perceptible change in output voltage over the ranges shown in the table.

DATA ON REGULATED SUPPLY

Input	Output
90-133 v ac	795 v dc at 0-10 ma
107-133 v ac	980 v dc at 0-10 ma

Photomultiplier Circuit. The series combination of 0.2M resistor and 0.1M potentiometer in parallel with the phototube dynode resistors allows the voltage to each phototube to be varied from a maximum value to approximately 65% of maximum without appreciably changing the current drawn through the OA3.

The dynode resistors are built into the base of the phototube socket. The phototube load resistor is the grid resistor of the preamplifier stage.

Preamplifier. The balanced cathode follower error-signal preamplifier circuit follows the phototubes.

The heater of the 6SN7 is operated from a Sola constant voltage transformer to provide better stability in the event of line voltage changes. The battery in the balance adjustment circuit is under a constant load to eliminate drifts due to transient battery voltage changes when the unit is first turned on.

The dual 10-turn Helipot in conjunction with the fine balance potentiometer allows the bias of one half of the stage to be adjusted either positively or negatively in order to compensate for unbalances in the circuit. This adjustment takes care of any unbalance in both the phototubes and the preamplifier circuit. The adjustment for balance is made with no light on the phototubes and thereby compensates for differences in dark currents and unbalanced operating points in the cathode follower. The gain of the preamplifier and phototubes is balanced by adjusting the supply voltage to one or both of the phototubes while both tubes are viewing equal light intensity.

The low values of cathode resistors were chosen because of the low input impedance of the Brown amplifier (approx. 2000 Ω). Lower values of cathode resistors would produce less loading by the amplifier but would cause the

circuit to draw more current than the regulator can supply and would also reduce the region of linear operation of the stage.

The gain of the cathode follower has been both calculated and measured to be approximately 0.6. It was found that the circuit as shown could not be absolutely balanced for all values of input voltage to be expected from the phototubes under actual operation. The amount of unbalance on one tube for inputs from 0 to 3 v with gain balanced at 3 v was approximately 8 mv, and for inputs from 0 to 0.5 v with gain balanced to 0.5 v was approximately 0.2 mv. This unbalance is probably due to the fact that the circuit is such that operation is on the extreme end of the linear region. This should be corrected, perhaps by using a separate plate supply of higher voltage and greater current capacity. Since the unbalance is much less if the operating region is limited and the gain adjusted at the maximum value of the region, the standard lamp intensity should not be any higher than the maximum intensity expected from the actual smoke, if errors are to be minimized.

Brown Amplifier. The Brown amplifier which follows the preamplifier is a patented DC to AC converter and amplifier for use with the two-phase Brown motor. The direction and speed of motor rotation depend upon the polarity and magnitude of the input signal. An analysis of the circuit may be found in data supplied by the Brown Instrument Division of Minneapolis Honeywell Regulator Company.(5)

Data taken on the amplifier and motor indicate that approximately 2.5 μ v signal will cause the motor to begin rotating and approximately 40 μ v will produce saturation speed. Actual sensitivity in the circuit is probably considerably less than this due to the fact that circuit noise and stray AC have the effect of lowering the amplifier gain.(6)

C. Mechanical Details

The Photoelectric Owl was built from prints obtained from the Naval Research Laboratory. The only change in the instrument itself was the extension of the shaft which drives the analyzers, and the substitution of a gear in place of the manually operated knob. In addition, a cooling coil was mounted on the scattering-lamp housing.

Data on Gears. The operating motor is coupled to the analyzers through a gear reduction of 750:1. This train is made up of 1.25:1 motor to gear box, 50:1 gear box, 2.5:1 gear box to Owl drive shaft, and 4.8:1 drive shaft to analyzers.

---

5. Gibson, Virgil D. and Richard A. Terry, "Characteristics of the Brown Electronik Continuous Balance System," Minneapolis-Honeywell Regulator Co., Brown Instrument Division, Bulletin B15-12, August 1, 1950.
6. Gibson, Virgil D. and Richard A. Terry, "Characteristics of the Brown Electronik Continuous Balance System," Minneapolis-Honeywell Regulator Co., Brown Instrument Division, Bulletin B15-12, p. 19, August 1, 1950.

Since the maximum speed of the motor is approximately 145 rpm, the maximum speed of rotation of the analyzers is thus limited to 1.16 deg/sec. With the present gear train the motor is operating at only half of rated load. Thus, the gear ratio could be reduced by a factor of two without exceeding the rating, and if bearings were installed on the Owl drive shaft, the ratio could be reduced even further, thereby speeding up the response of the analyzers.

Coupled to the analyzers is a potentiometer which supplies a voltage, for recording purposes, proportional to the analyzer angle. This potentiometer is driven from the Owl drive shaft through a gear reduction of 1.775:1 such that the total reduction from analyzers to potentiometer is $1.775/1 \cdot 1/4.8 = 1:2.7$, i.e., 100° rotation of the analyzers gives 270° rotation of the recorder potentiometer.

Location of Components. The Photoelectric Owl along with its gear train and drive motor are mounted on a metal base. Also on this base are the recording potentiometer, the limit switch, and a terminal housing for the cable couplers. All of the other components, with the exception of the recorder, are mounted on a standard rack mounting chassis which may be remotely located. Figures 3, 4, and 5 are photographs of the apparatus.

D. Servo-analysis of the System

The transfer functions of the various components in the loop have been measured and calculated. These are shown in the blocks in Figure 6 and were obtained as explained below.

With the maximum supply voltage and the standard light intensity set at a value which very roughly approximates the maximum intensity scattered by smoke of normal concentration, the gain of the two opposed phototubes is approximately 0.25 v/deg. rotation of the analyzers at 45° initial setting of the analyzers.

The gain of the cathode follower has been both calculated and measured to be approximately 0.6. The gain figure for the Brown amplifier is given in M. H. Bulletin No. B15-12[7] as 10^6.

With the aid of linearized speed torque curves and other data found in Bulletin B15-12, the transfer function of the Brown motor was obtained by methods given by Brown and Campbell.[8]

The overall open loop transfer function then becomes,

$$\frac{\phi(s)}{\mathcal{E}(s)} = \frac{917}{s\,(1 + 0.14s)} = KG\,(s)$$

7. Gibson, Virgil D. and Richard A. Terry, "Characteristics of the Brown Electronik Continuous Balance System," Minneapolis-Honeywell Regulator Co., Brown Instrument Division, Bulletin B15-12, p. 2, August 1, 1950.
8. Brown, Gordon S. and Donald P. Campbell, Principles of Servomechanisms, New York, John Wiley and Sons, 1948, Chapter 5, pp. 131-136.

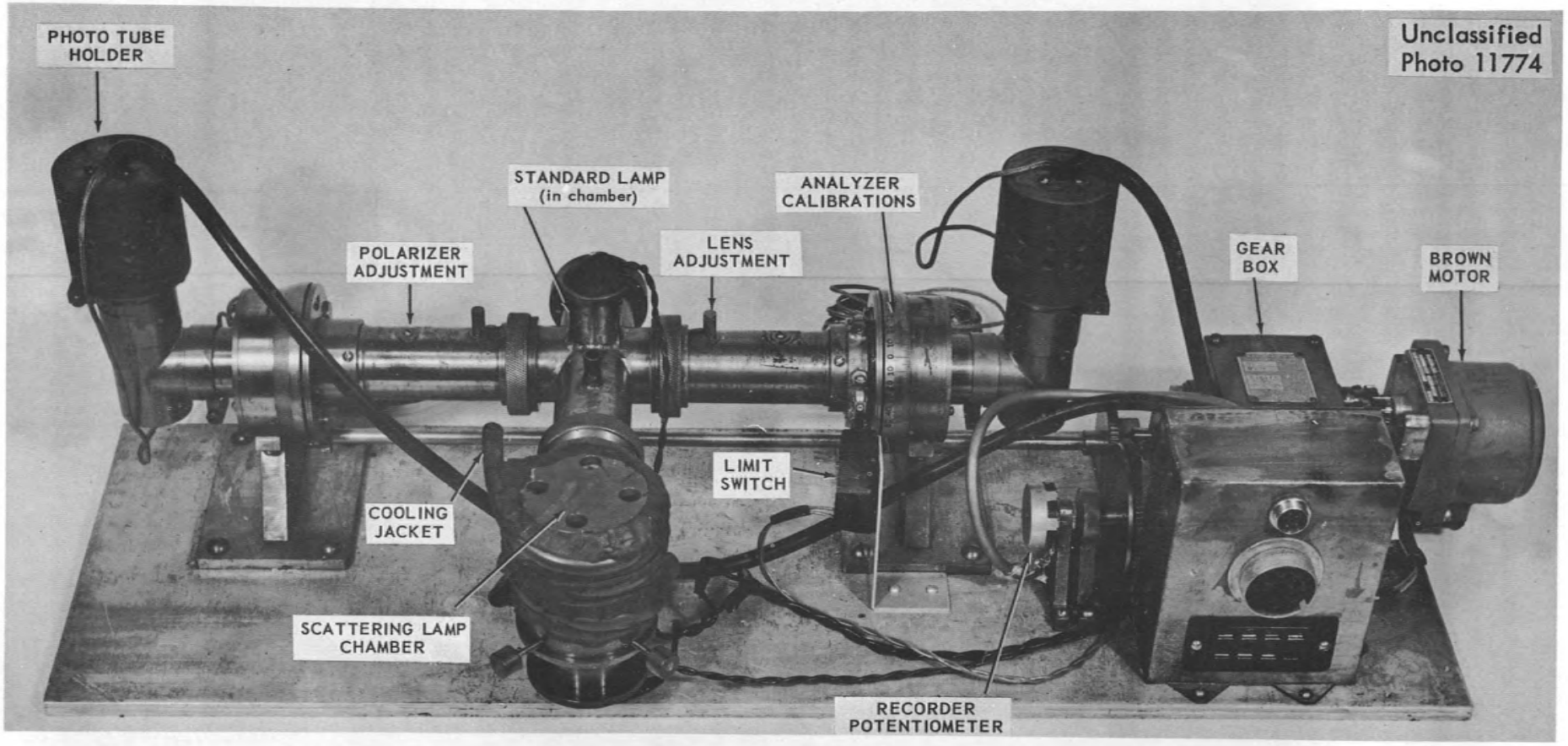

Fig. 3. Photoelectric Owl.

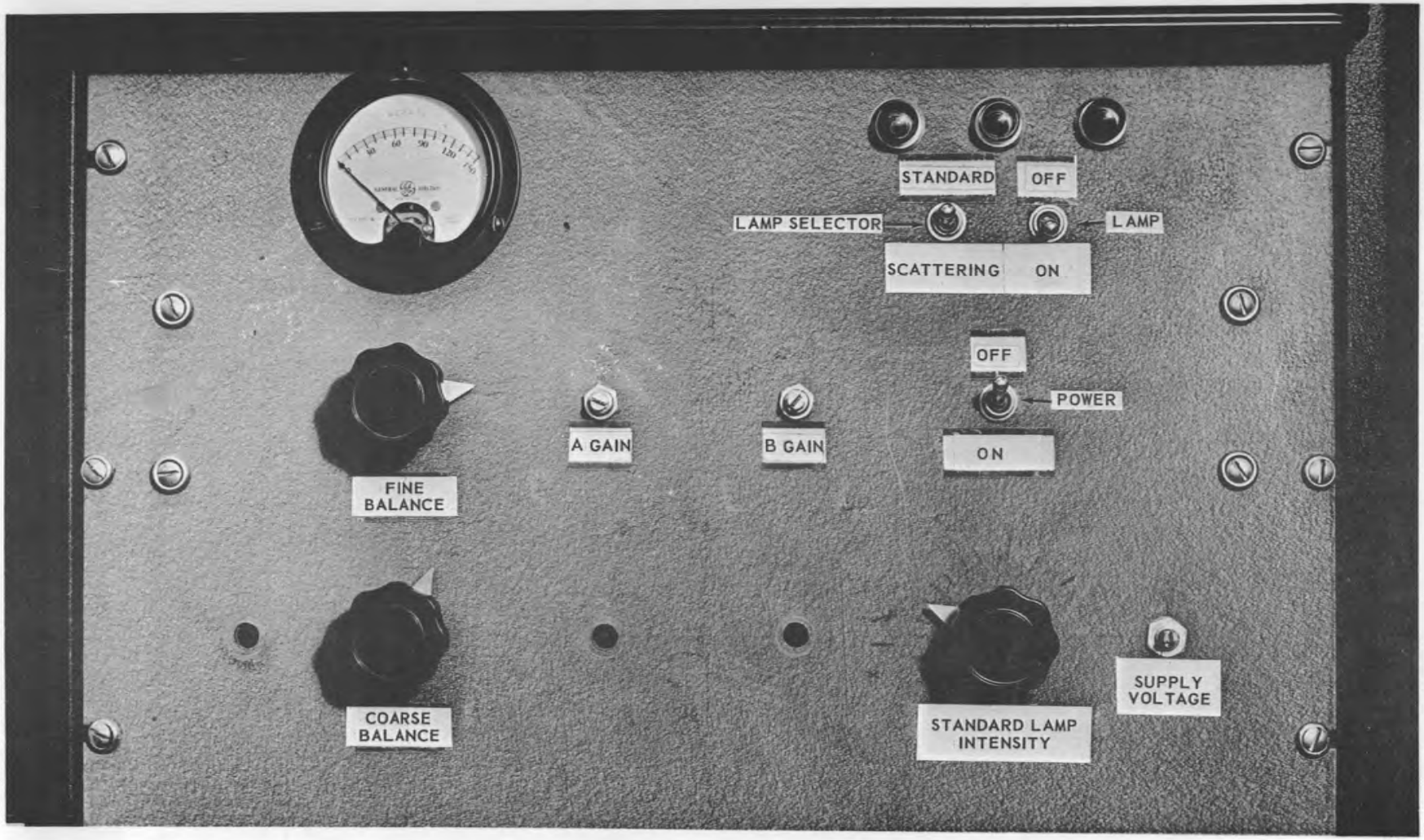

Fig. 4. Servo Owl Electronic Chassis (front view).

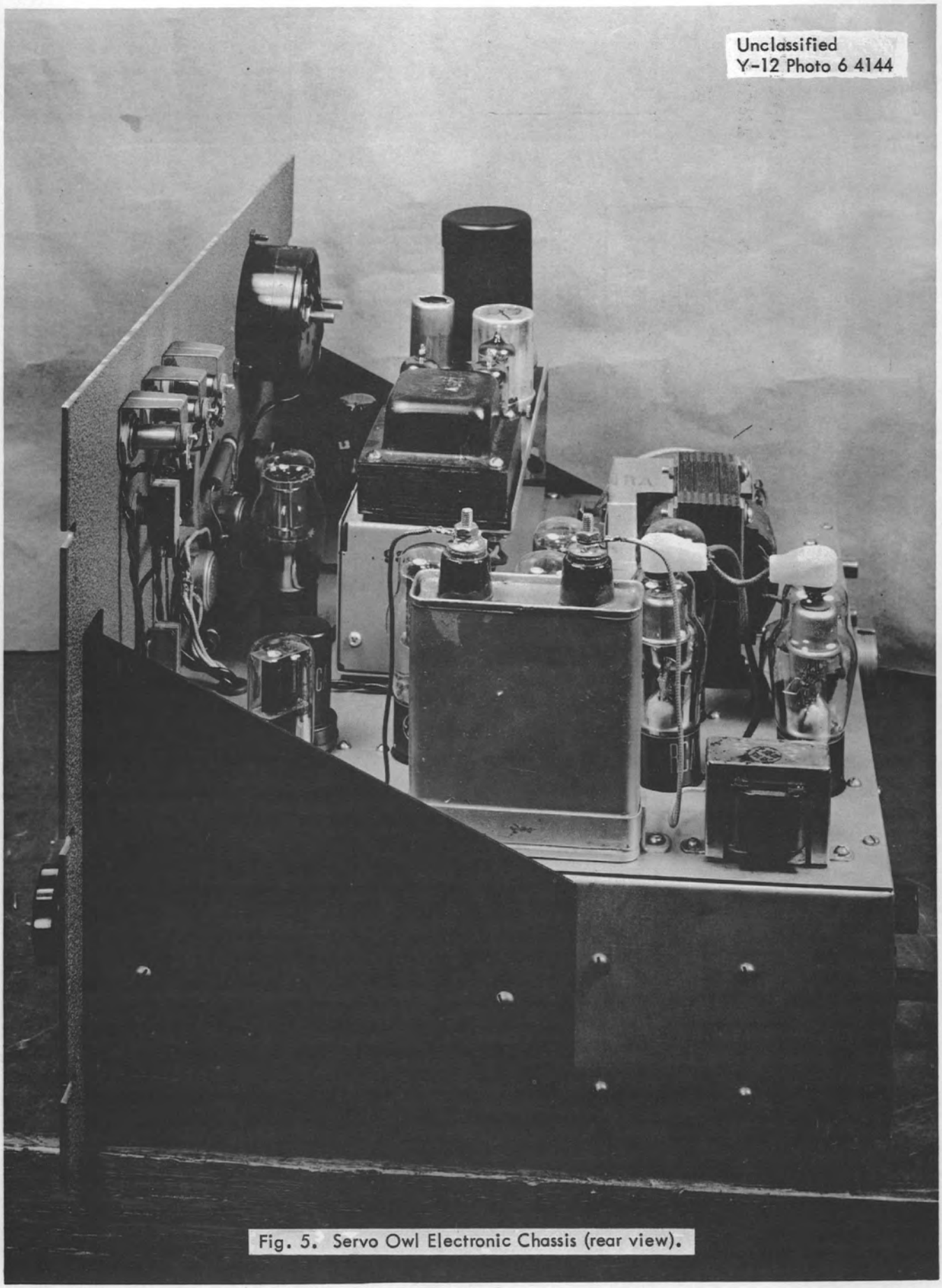

Fig. 5. Servo Owl Electronic Chassis (rear view).

Unclassified
Dwg. 22415

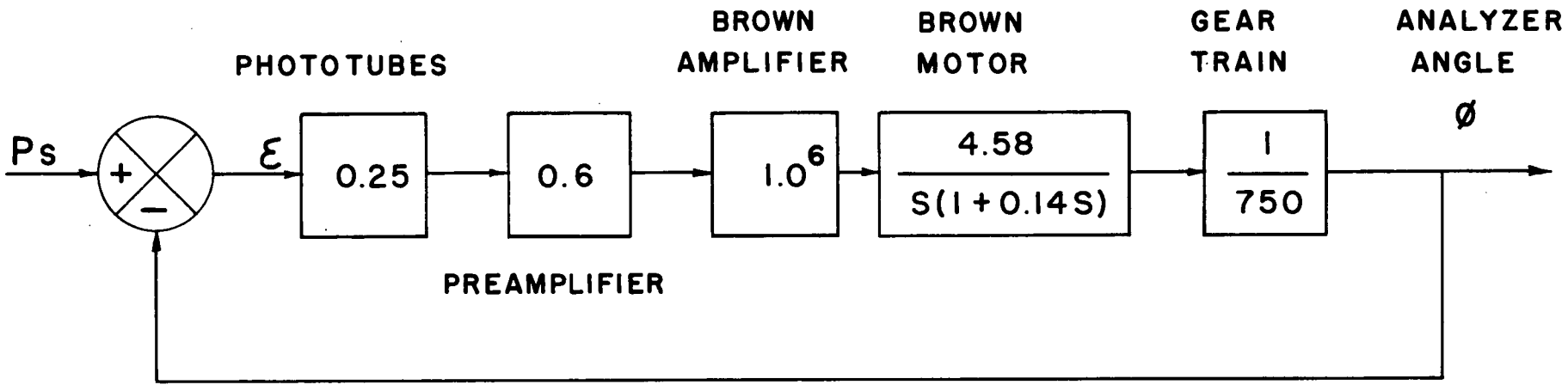

$$\frac{\phi_{(S)}}{\varepsilon_{(S)}} = \frac{917}{S(1 + 0.14S)}$$

FIGURE 6 SERVO OWL TRANSFER FUNCTIONS

where, $\phi(s)$ and $\mathcal{E}(s)$ are the analyzer angle and the error signal as functions of the Laplace transform complex variable S, and KG(s) is the abbreviation for the transformed open loop transfer function. K, the frequency invariant portion of KG(s), was measured to be approximately 7.5 for a 0.1 degree error with the Brown amplifier gain at maximum value. This reduced gain is probably due to stray AC saturating the Brown amplifier. The motor time constant of 0.14 seconds seems to be a fair approximation since calculations using this value indicate that the motor should reach 97% of final speed in 0.5 seconds, while it was observed to reach maximum speed in slightly less than 0.5 seconds.

Figure 7 is the Nyquist plot for absolute stability study and the log magnitude vs. angle plot for relative stability determinations, using 10 as the value of K. From the Nyquist plot it is seen that there are no encirclements of the point - 1 + j0 and from KG(s) it may be seen that there are no poles in the right half of the S plane. Therefore there are no zeros of the closed loop in the right half of the S plane and the system is stable.(9)

Inspection of the log magnitude vs. angle plot shows that the $KG(j\omega)$ plot is tangent to the $\phi/\phi_i = 1.3$ contour at $\omega \simeq 7$. This indicates that the resonant frequency of the system is approximately 1.1 cps., and that the overshoot at this frequency is approximately 30%. This should produce satisfactory performance of the servo.

E. Results

The measured response of the system to an instantaneously applied error signal is as shown by a sample case in Figure 8. The build-up portion of the curve is essentially a straight line, the slope of which is measured to be approximately 1.1 deg./sec. This slope is limited by the top speed of the gear train output and indicates that the rise time would be even less if the gear reduction were lowered. It will be noticed that there is no overshoot.

A drift stability study of three days duration was made on the Servo Owl. The instrument was allowed to warm for ten minutes, then it was zeroed and balanced at 45° analyzer angle with the standard lamp intensity adjusted to approximate that given by a smoke of moderate concentration. At the end of the 8-hour day the machine was turned off, and then on the following morning it was allowed to warm ten minutes but no adjustments were made. At the end of the second day it was turned off and the same procedure was repeated on the third day.

During the three day test the "long-time" variations or drifts from 45° were within approximately $\pm 0.2^\circ$. The "short-time" (less than 10 seconds duration) fluctuations were also within approximately $\pm 0.2^\circ$, i.e., the maximum

---

9. Brown, Gordon S. and Donald P. Campbell, Principles of Servomechanisms, New York, John Wiley and Sons, 1948, Chapter 6, Article 8 and Chapter 8.

Unclassified
Dwg. 22416

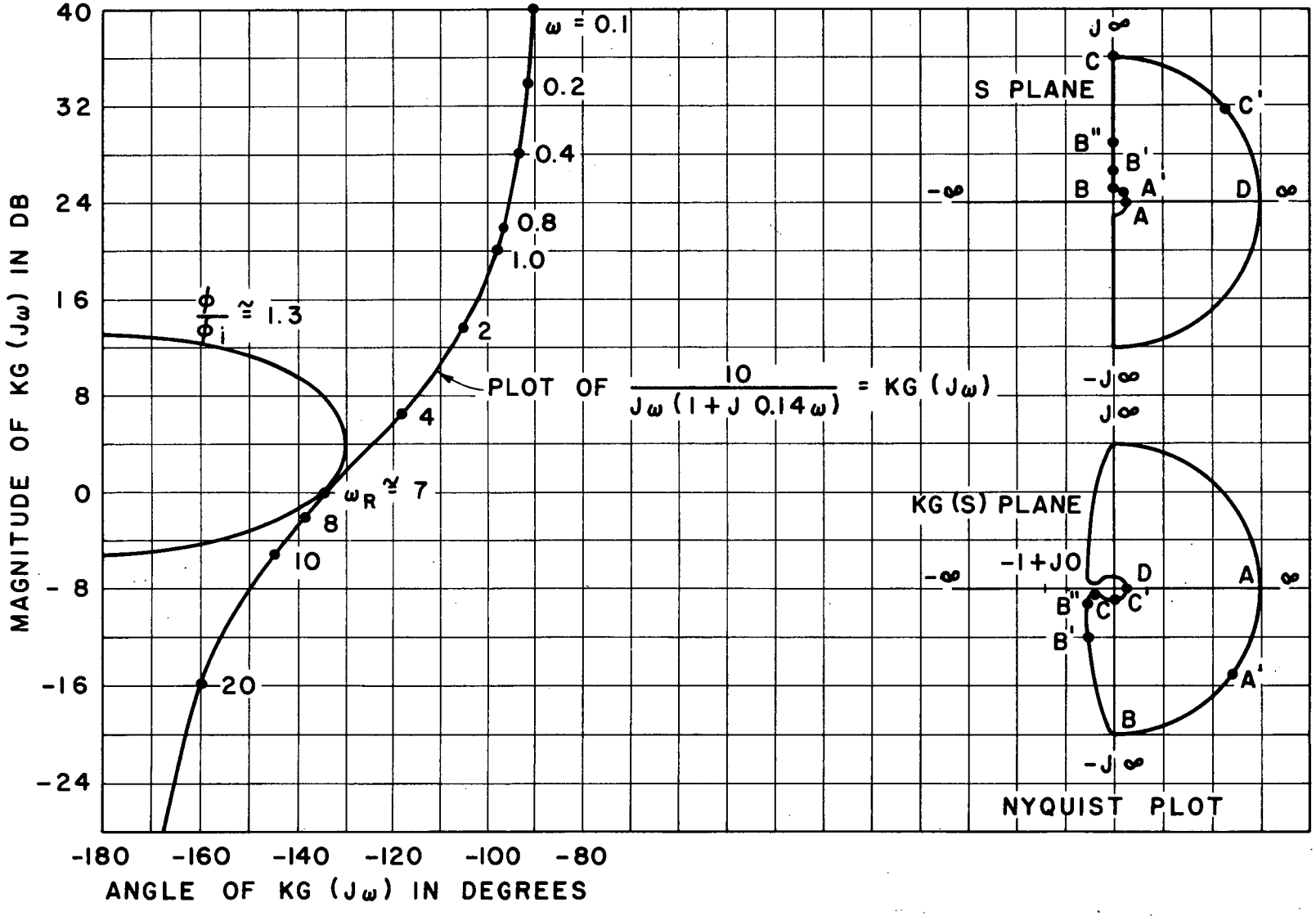

FIGURE 7
SERVO OWL STABILITY STUDY

Unclassified
Dwg. 22417

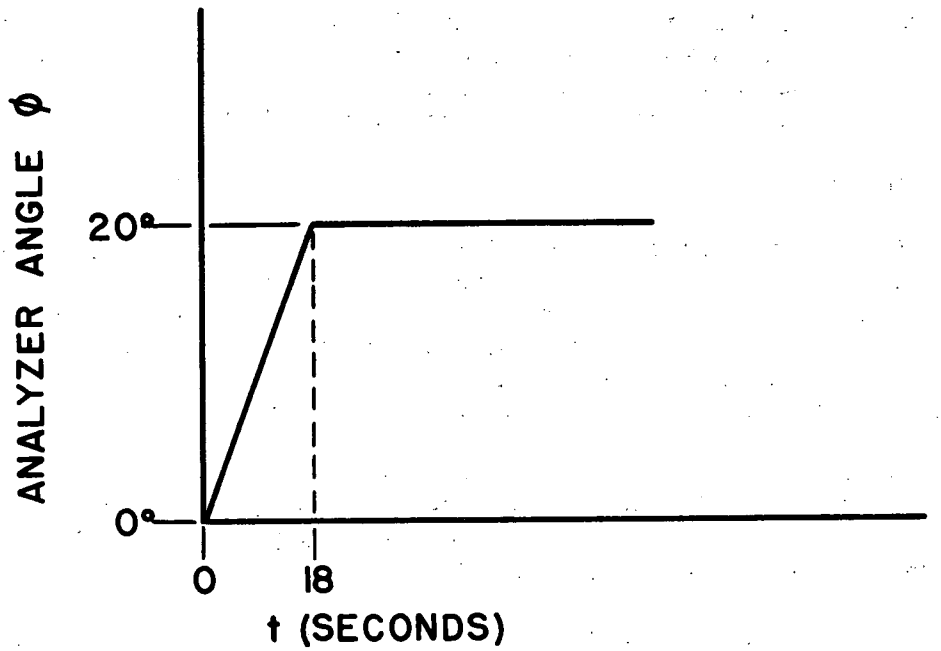

SERVO OWL RESPONSE
TO STEP INPUT

Fig. 8

variation about 45° was within approximately $\pm 0.4^{\circ}$.[10]

Figure 9 is a comparison of Servo Owl and Visual Owl readings. These points were taken on two different days, using DOP smokes of various sizes.

The agreement is quite good since it is difficult to balance the Visual Owl closer than one degree, and as previously mentioned, the cathode follower in the Servo Owl will not be perfectly balanced at all light intensities.

The Servo Owl will indicate particle size when the smoke concentration is too low to use the Visual Owl. The limiting factor in the accuracy at low concentrations is the magnitude of the stray light inside the Photoelectric Owl, i.e., if the particle size is held constant and the concentration decreased, the angle indicated by the Servo Owl moves toward the "stray-light angle."[11]

F. Conclusions

The Servo Owl herein described is a useful tool for automatically and continuously indicating particle size of homogeneous spherical aerosols in the range from 0.1 μ to 0.2 μ radius. It can be used wherever the Visual Owl is useful and its use can be extended to lower concentrations. Stray light can probably be minimized by use of baffles, etc., so that the Servo Owl can be used at even lower concentrations.

It should be noted that there are certain factors in the basic design of both the Visual and Photoelectric Owls which limit their accuracy. These are discussed and changes are indicated by Hans Mueller in "Polarimetric Investigations of Light Scattering, Part III."[12]

Operating instructions for the Servo Owl will be found in Appendix D.

IV. A SERVOMECHANISM FOR CONTROLLING PARTICLE SIZE IN THE DIOCTYL PHTHALATE AEROSOL GENERATOR

A. Principles of Operation

Figure 10 is a block diagram of the DOP Servo Controller showing the major components included in the loop. The error detector consists of two potentiometers connected as a differencing circuit, the output from which feeds into the compensating network which serves to stabilize and improve the response of the system. This network feeds into a Brown amplifier which drives a small, two-phase, Brown motor. Coupled to the motor is a variac which

---

10. The drift stability at smaller angles may be expected to be worse as explained in Appendix B.
11. See Appendix C.
12. Mueller, Hans, "Polarimetric Investigations of Light Scattering, Part III," Mass. Institute of Technology, Final Report on Contract No. W18-035-CM-454, June 1, 1950.

Unclassified
Dwg. 22418

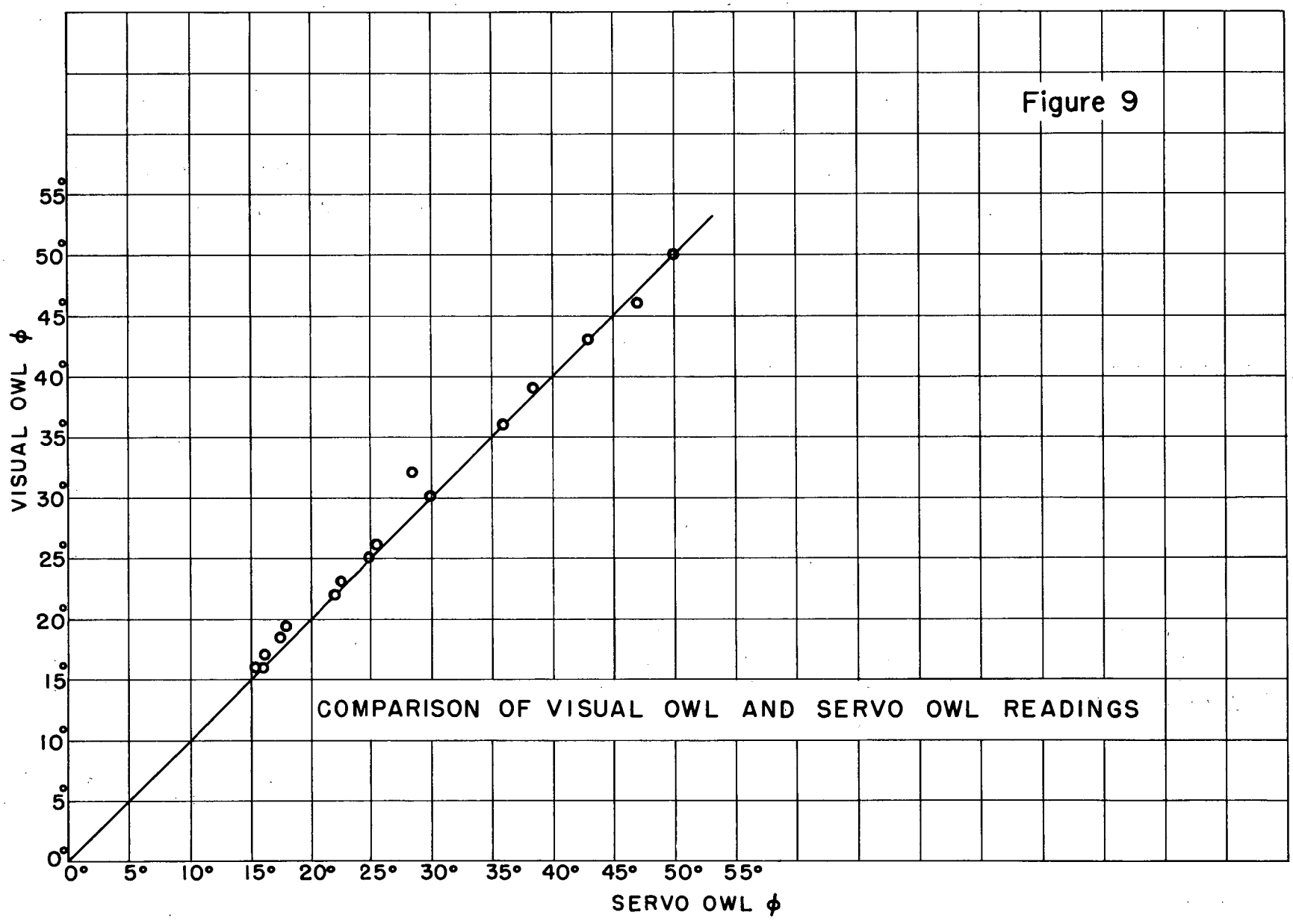

Unclassified
Dwg. 22419

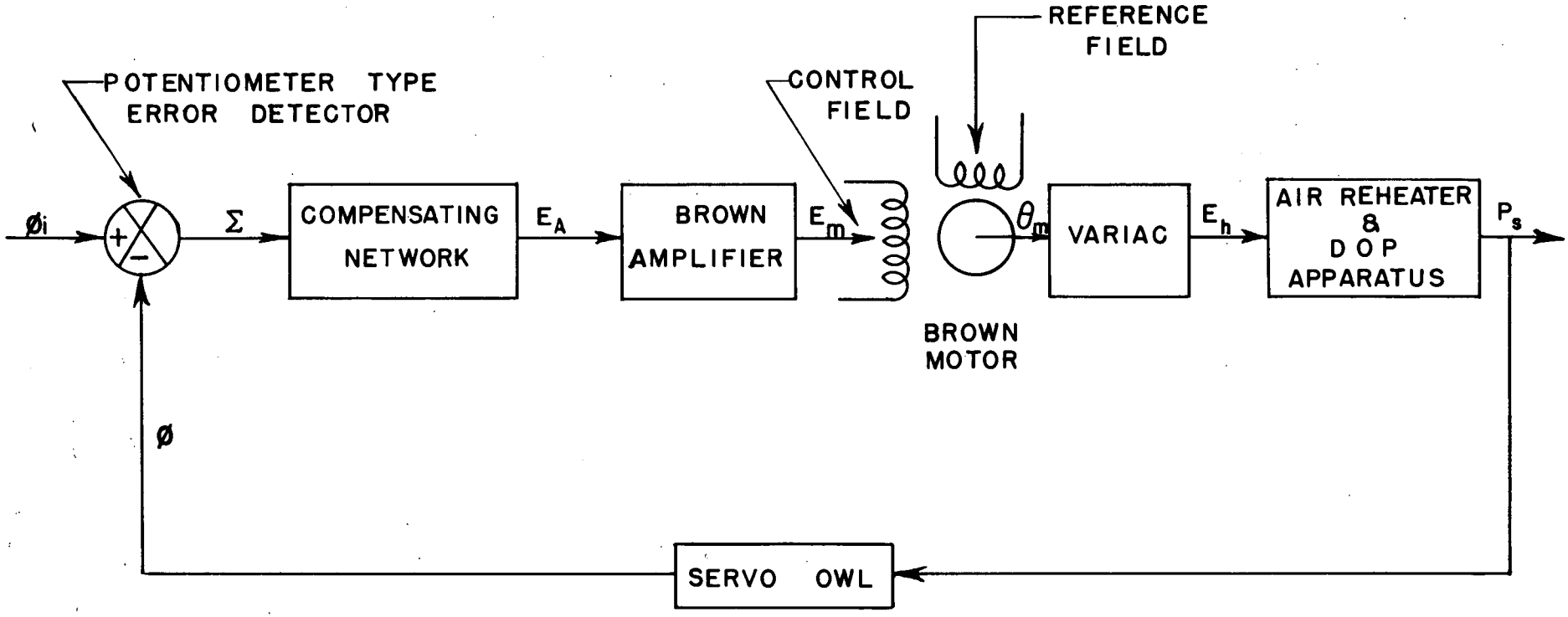

LEGEND:

Σ = ERROR VOLTAGE

E_m = CONTROL FIELD VOLTAGE

E_h = REHEATER VOLTAGE

Ø = OWL ANALYZER ANGLE

E_A = VOLTAGE INPUT TO AMPLIFIER

θ_m = MOTOR SHAFT ANGLE

P_s = OUTPUT PARTICLES

$Ø_i$ = INPUT ANGLE

FIGURE 10 BLOCK DIAGRAM OF DOP SERVO CONTROLLER

supplies the voltage to the air-reheater on the DOP apparatus. Particles, whose size is controlled by the reheater temperature, are fed into the Servo Owl[13] which actuates the output potentiometer of the error detector.

In actual operation, the operator will set a control (the input potentiometer of the error detector) to the desired particle size. If the generator is not producing particles of this size, an error signal will be fed through the forward part of the loop such that the reheater voltage will be changed in a manner which will tend to correct the output of the DOP generator.

During operation of the equipment, with the input control set to the desired particle size, if the output particle size drifts slightly due to changes in the DOP apparatus, the error signal will cause a large momentary change in the reheater voltage, thus tending to correct the error rapidly.

B. Discussion of Circuits

The complete circuit diagram of the DOP Servo Controller is shown in Figure 11.

Power Supply. A full wave choke input rectifier circuit supplies 75 volts to the balanced cathode follower circuit and 105 v to the μ-type voltage regulator. The voltage regulator supplies approximately 50 v to the potentiometers in the error detector circuit. Since both potentiometers are connected in parallel, there is little need for stabilizing the DC voltage supplied to them, and the real reason for the regulator is to reduce the 60 cycle ripple which affects the sensitivity of the Brown amplifier. A jack is provided for connection of a scope to aid in balancing the regulator.

Error Detector. Two potentiometers are connected as a differencing circuit and feed an error signal into the preamplifier when their shaft positions are not the same. One, of course, is the input or command control; the other is the output control which is coupled to the Owl analyzers. This control could be coupled to the recorder potentiometer on the Owl chassis; however, the same potentiometer was used for both control and recording purposes in the experiments described herein.

Preamplifier. The preamplifier is of the balanced cathode follower type. No provision is made for adjusting the gains of the separate halves of the stage and the balance adjustment also leaves something to be desired. At the input of the cathode follower is a balanced lead network consisting of two one-microfarad capacitors, two 4-megohm resistors, and two 1000000 ohm resistors. There is a similar lead network with different parameters at the output. These lead networks serve to stabilize the system.

Miscellaneous Circuits. The other circuits shown in the diagram (Figure 11) are self-explanatory or have been discussed in the first part of the report.

---

13. Described in the first section of this report.

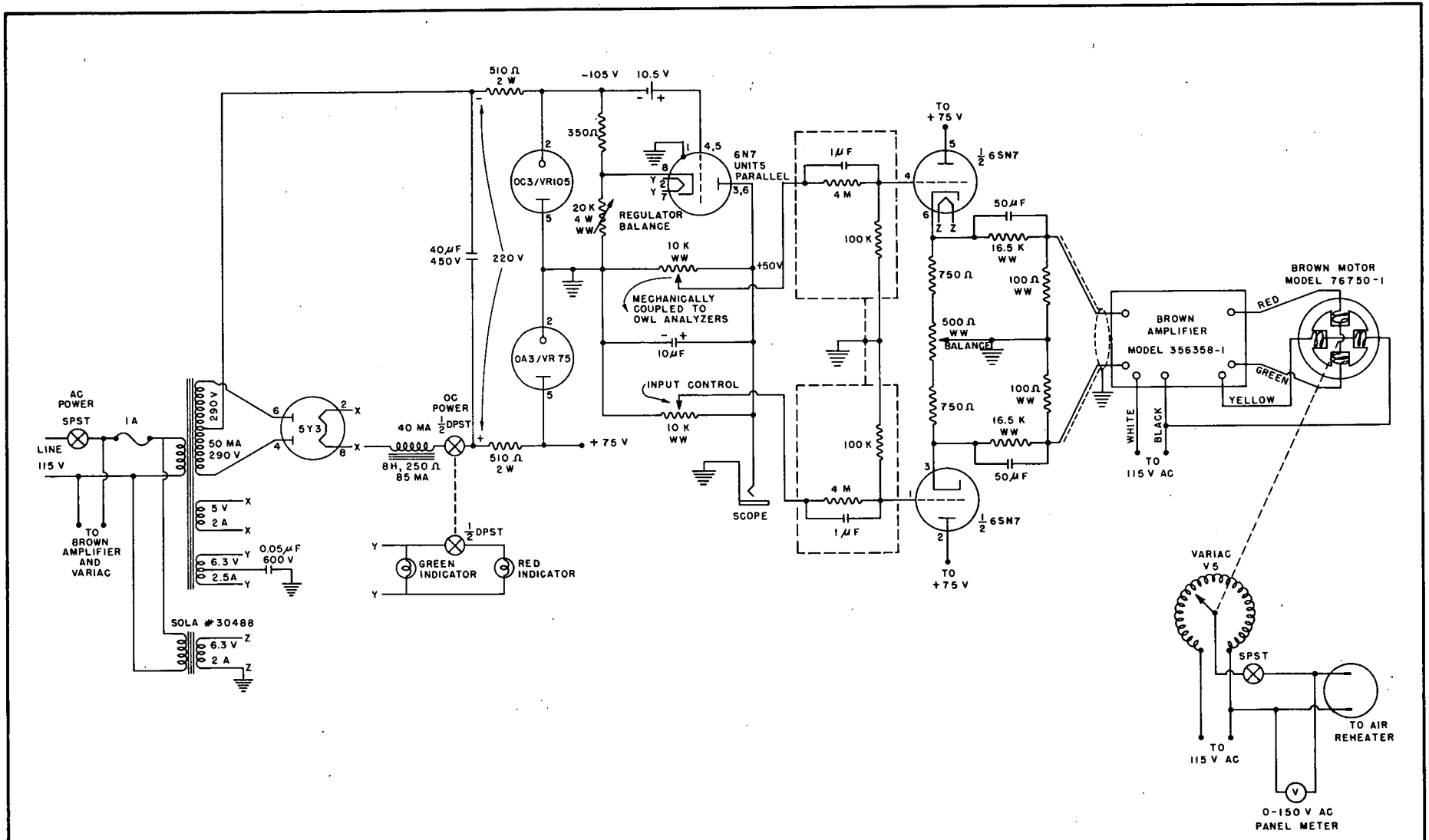

FIGURE 11

SCHEMATIC WIRING DIAGRAM FOR DOP SERVO CONTROLLER

C. Mechanical Details

Figures 12 and 13 are photographs showing the layout of the Servo Controller. All components are located on this chassis with the exception of the air-reheater which, of course, is on the DOP generator, and the output potentiometer which is mounted on the Owl.

D. Servo-analysis of the System

Figure 14 shows the response of the DOP generator to a step input of reheater voltage as measured by the Visual Owl. From these curves an approximate transfer function was estimated to be:

$$\frac{\phi(s)}{E_h(s)} = \frac{2}{1 + 180S} \quad \frac{\text{deg.}}{\text{volt}}$$

where, $\phi(s)$ and $E_h(s)$ are the angle corresponding to particle size and the reheater voltage as functions of the Laplace transform complex variable S.

In the blocks in Figure 15 are shown the measured and calculated transfer functions of the other components in the system including the lead networks shown in the circuit diagram. The transfer function of the Servo Owl is taken to be a straight gain, i.e., it is assumed that the response of the Owl is faster than the response of the control loop.

Stability studies of the system were made which indicated that lead networks would improve the system response and an electrical analog of the generator transfer function was used to test the system for various lead network parameters and circuit gains. There was good agreement between theoretical and experimental results using the analog, and the lead network parameters shown were selected as giving excellent system response.

E. Results

The Servo Controller gave very good results when tested on an electrical analog of the DOP generator. The response was speeded up considerably over that obtained by manual operation, and a simulated reheater line-voltage drop of 50% produced only a small momentary change in the output of the generator analog.

However, when the actual DOP generator was put into the system it proved to be completely unstable. Unfortunately, the analog of the generator had been noise-free while the generator output as indicated by the Servo Owl was quite noisy. The frequency of the noise was such that the system had not recovered from one pulse before the next arrived and the net result was oscillation of the system. Stability could not be achieved by changing the lead network parameters or the system gain.

Unclassified
Photo 11772

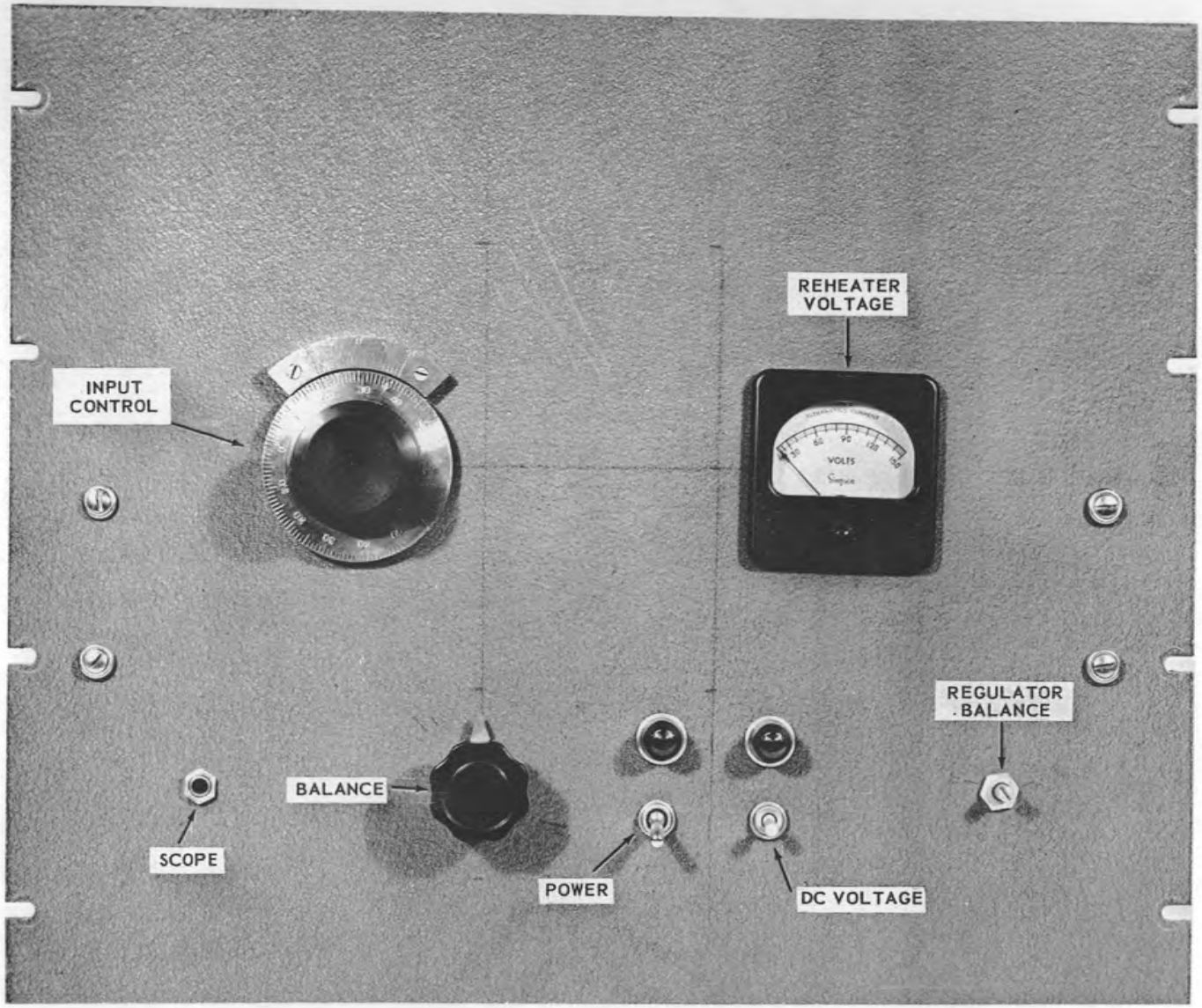

Fig. 12. Servo Controller Electronic Chassis (front view).

Unclassified
Photo 11777

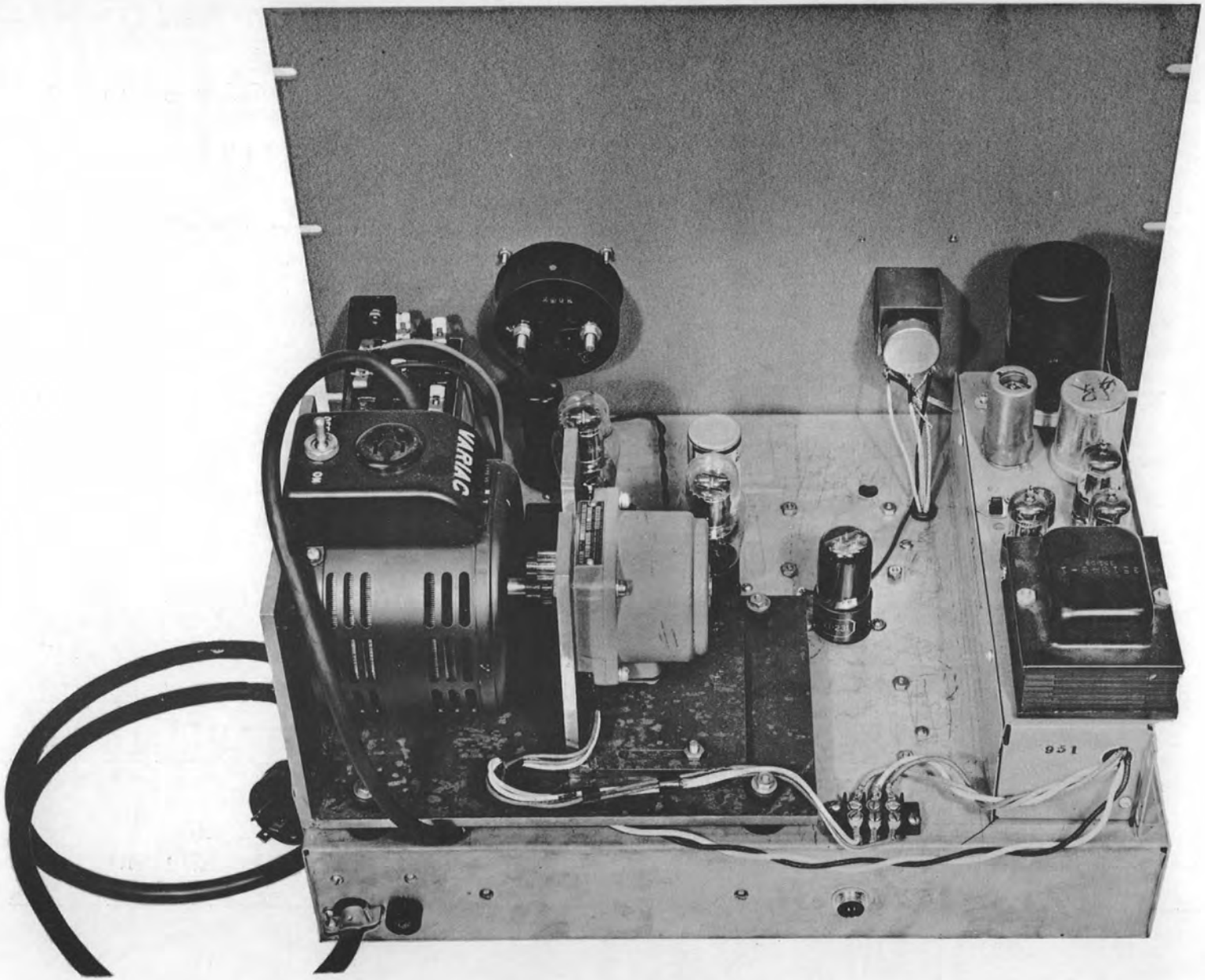

Fig. 13. Servo Controller Electronic Chassis (rear view).

Unclassified
Dwg. 22421

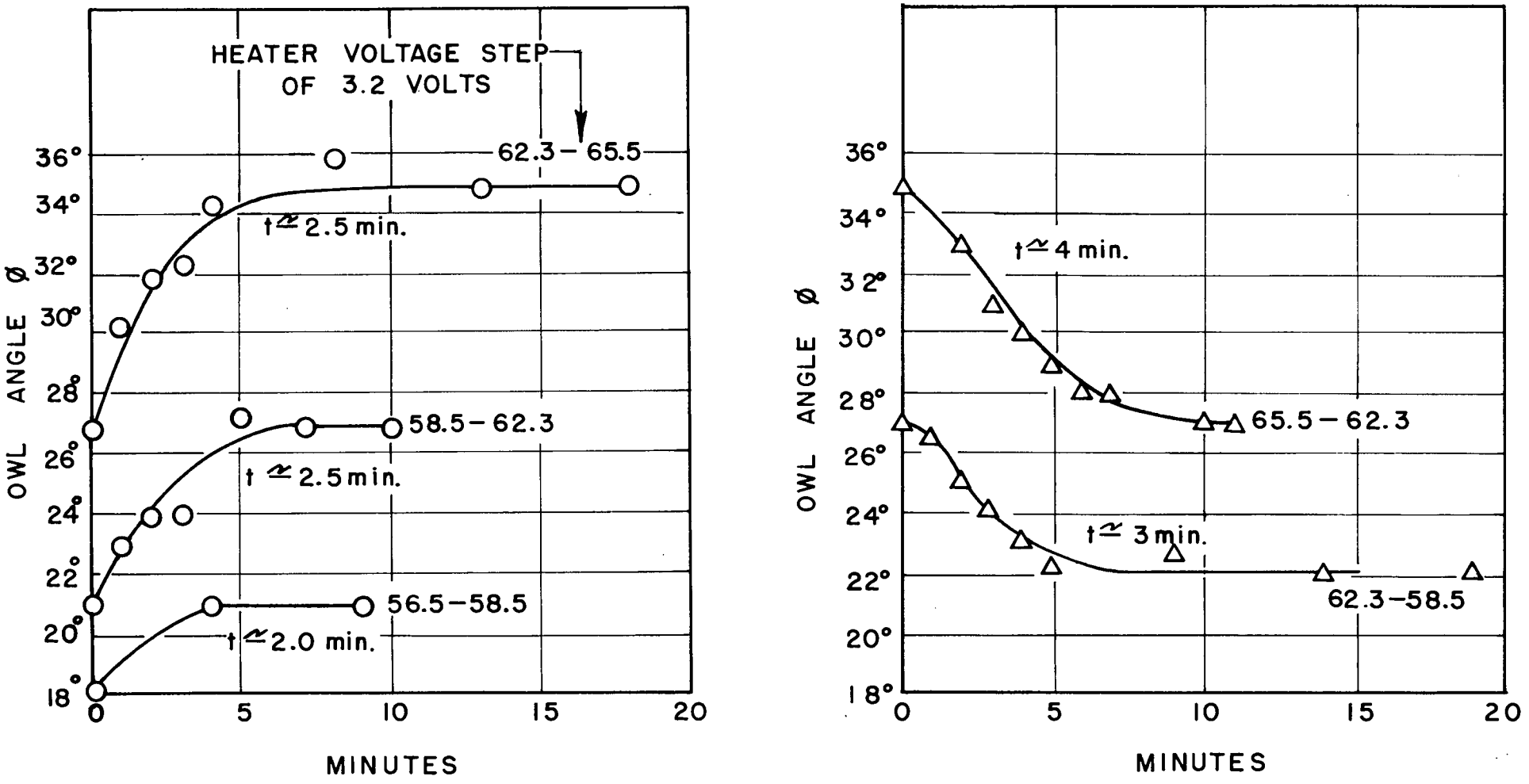

FIGURE 14. RESPONSE OF DOP APPARATUS TO STEP INPUT OF REHEATER VOLTAGE

Unclassified
Dwg. 22422

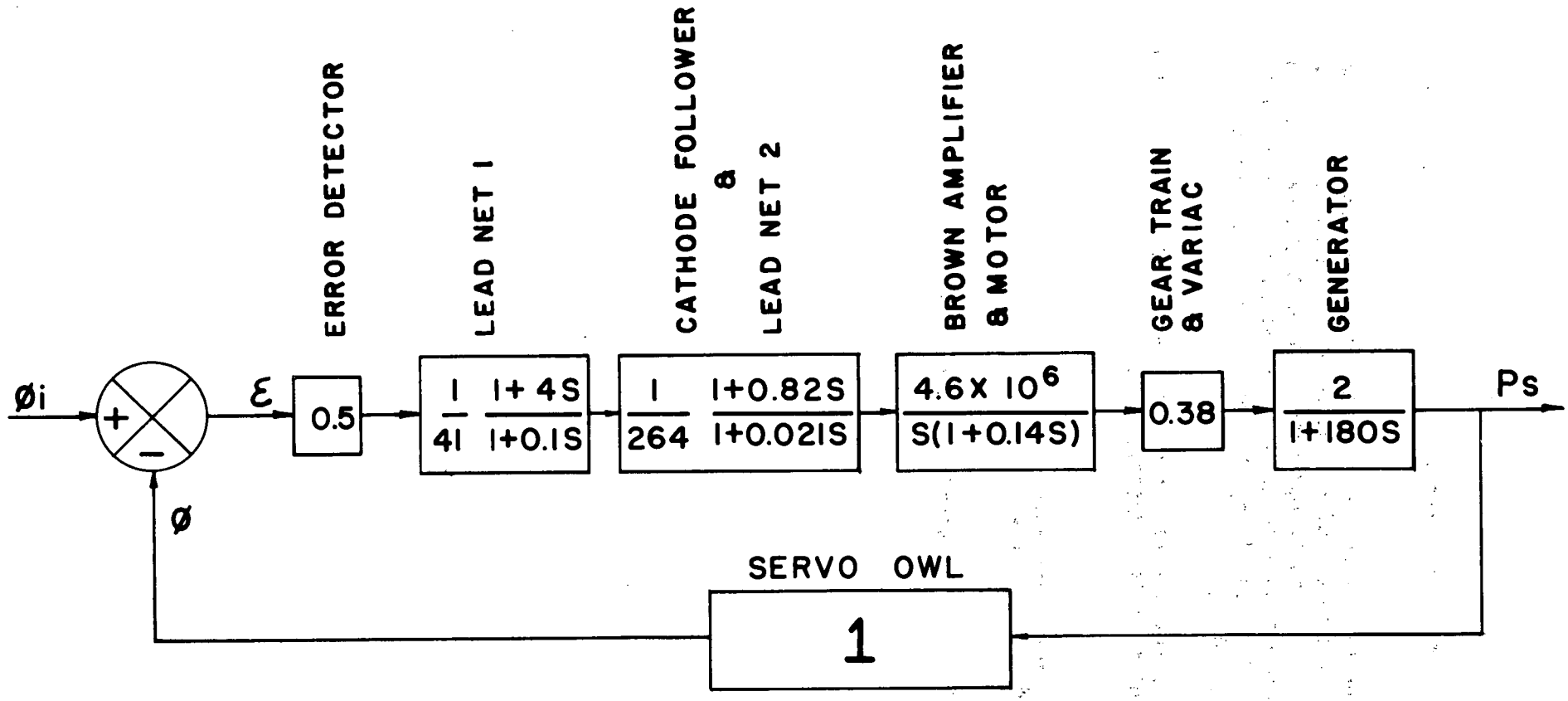

$$\frac{\phi_{(S)}}{\varepsilon_{(S)}} = \frac{161\,(1+4S)(1+0.82S)}{S(1+0.1S)(1+0.021S)(1+0.14S)(1+180S)}$$

FIGURE 15 SERVO CONTROLLER TRANSFER FUNCTIONS

F. Conclusions

The Servo Controller for the DOP generator as described in this section is unsatisfactory.

The sensitivity of the system to noise seems to be the reason for the unsatisfactory operation. Reduction of the noise or desensitizing of the system should effect an improvement in operation. A preliminary analysis indicates that the system might be made to perform satisfactorily by putting the compensating networks in an auxiliary feedback loop whose feedback quantity is a thermocouple voltage.

A closer look at the generator response also indicates that perhaps a better approximation to the transfer function might be:

$$\frac{\phi(s)}{E_h(s)} = \frac{2}{(1 + 90s)^2} \quad .$$

This indicates an increased tendency toward instability.

V. APPENDICES

A. Explanation of the Operation of the Photoelectric Owl

It has been shown[14] that when particles smaller than about 0.2 μ radius are illuminated with a parallel beam of unpolarized light they scatter light which is partially polarized, that is, the scattered light is made up of two plane-polarized components whose planes of polarization are at right angles to each other. One component, of intensity i_1, has its light vibrations perpendicular to the incident beam while the other component i_2 has its light vibrations parallel to the incident beam. It was found that the ratio of i_2 to i_1 varies from a low value to greater than one for particles below 0.2 μ radius. The polarization can thus be used as a measure of particle radii up to 0.2 μ.

Figure A1 is the optical system of the Photoelectric Owl which measures the ratio of i_2 to i_1. Two fixed polaroids whose planes of polarization are at right angles to each other are placed, one on either side of the smoke chamber, along a line which is perpendicular to the incident beam. One of these polaroids then transmits i_2 down one arm of the Owl while the other transmits i_1 down the opposite arm. Two additional polarizers called the analyzers are placed between the first polarizers and the phototubes. The analyzers have their planes of polarization parallel to each other and they are mechanically coupled so that they may be rotated as a unit.

To measure the particle size, the analyzers are rotated until the light intensities seen by the two phototubes are equal. Then,

$$\frac{i_2}{i_1} = \tan^2 \phi$$

where ϕ is the angle between the direction of the light vibrations transmitted by the analyzer and the plane containing the directions of the incident light and the viewing tubes. This equation may be derived with the aid of the sketch in Figure A2.

Light intensity is proportional to the square of the amplitude of the vibrations: $I = KL^2$, where I is intensity and L is amplitude. Let I_1 and I_2 be the intensities seen by the phototubes. Then, when the intensities are equal, from Figure A2

$$I_1 = KL_1^2 = I_2 = KL_2^2$$

$$L_1^2 = L_2^2$$

---

14. Sinclair, David, Handbook on Aerosols, Washington, D.C., Atomic Energy Commission, 1950, Chapter 7, pp. 81-85.

Unclassified
Dwg. 22423

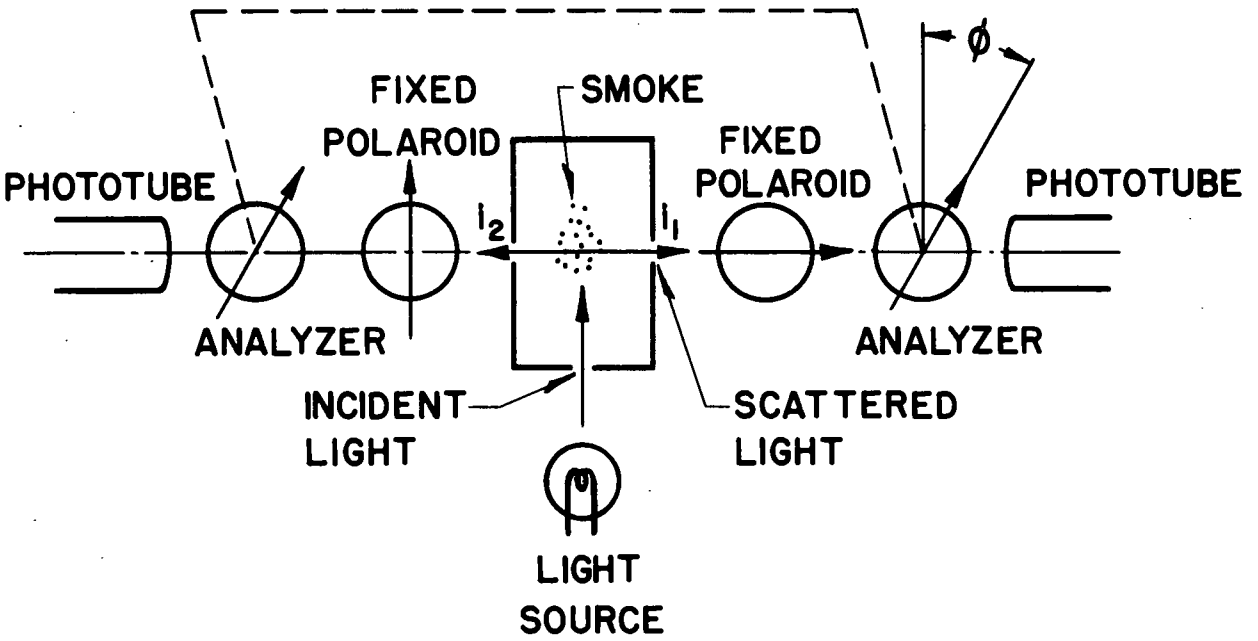

OPTICAL SYSTEM OF THE PHOTOELECTRIC OWL

Fig. A-1

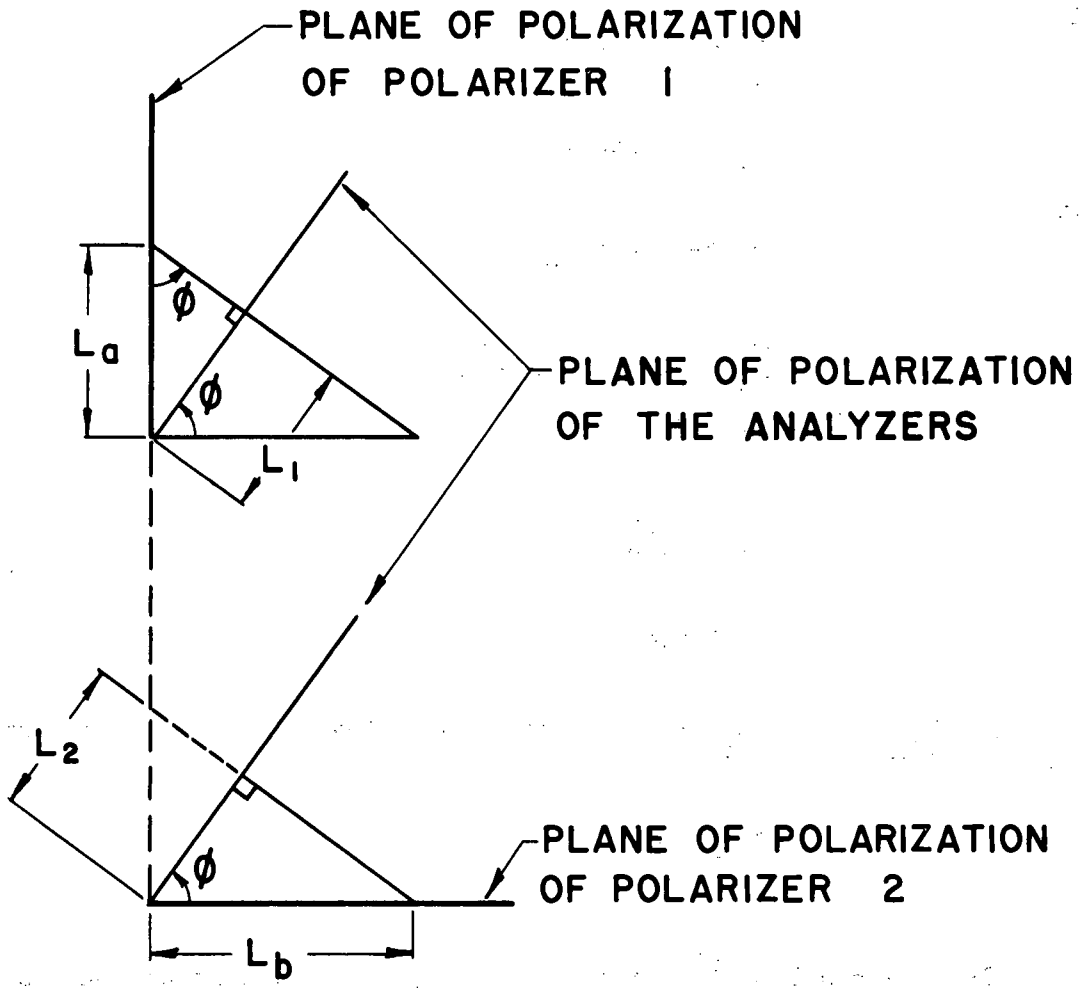

L_a = AMPLITUDE OF LIGHT THROUGH POLARIZER 1

L_b = AMPLITUDE OF LIGHT THROUGH POLARIZER 2

L_1 = AMPLITUDE OF LIGHT THROUGH ANALYZER 1

L_2 = AMPLITUDE OF LIGHT THROUGH ANALYZER 2

ϕ = ANGULAR READING OF THE CALIBRATIONS ON THE ANALYZER MOUNTS

SKETCH OF THE OPERATION
OF THE POLARIZERS AND ANALYZERS

Fig. A-2

and

$$L_1 = L_a \sin \phi$$

$$L_2 = L_b \cos \phi \quad .$$

Then

$$L_a^2 \sin^2 \phi = L_b^2 \cos^2 \phi$$

$$\frac{L_b^2}{L_a^2} = \frac{\sin^2 \phi}{\cos^2 \phi} = \tan^2 \phi \quad .$$

Also,

$$i_1 = K_1 L_a^2$$

$$i_2 = K_1 L_b^2$$

where, i_1, i_2, L_a, and L_b are as previously defined and K_1 is the proportionality constant. Then,

$$\frac{i_2}{i_1} = \frac{L_b^2}{L_a^2} = \tan^2 \phi \quad .$$

Tables are available[15] from which may be calculated the values of ϕ as a function of radius for different wave lengths of scattered light and aerosols of different refractive indices. On Page 86 of the reference given in footnote (14) may be found a set of curves relating ϕ and radius for green light and five different refractive indices. Figure A3 is a reproduction of this set of curves.

B. Servo Owl Error Constant

An aerosol of a given particle size gives a balance in the Owl at some analyzer angle ϕ which corresponds to the particle size. In this analysis the angle corresponding to a given particle size will be called ϕ_p to differentiate it from ϕ, the angular setting of the analyzers.

In addition an aerosol of a given particle size and number concentration scatters a total amount of light A in the two polarization planes.

---

15. National Bureau of Standards, "Tables of Scattering Functions for Spherical Particles," United States Department of Commerce, Mathematics Series 4, January 25, 1949.

Unclassified
Dwg. 22425

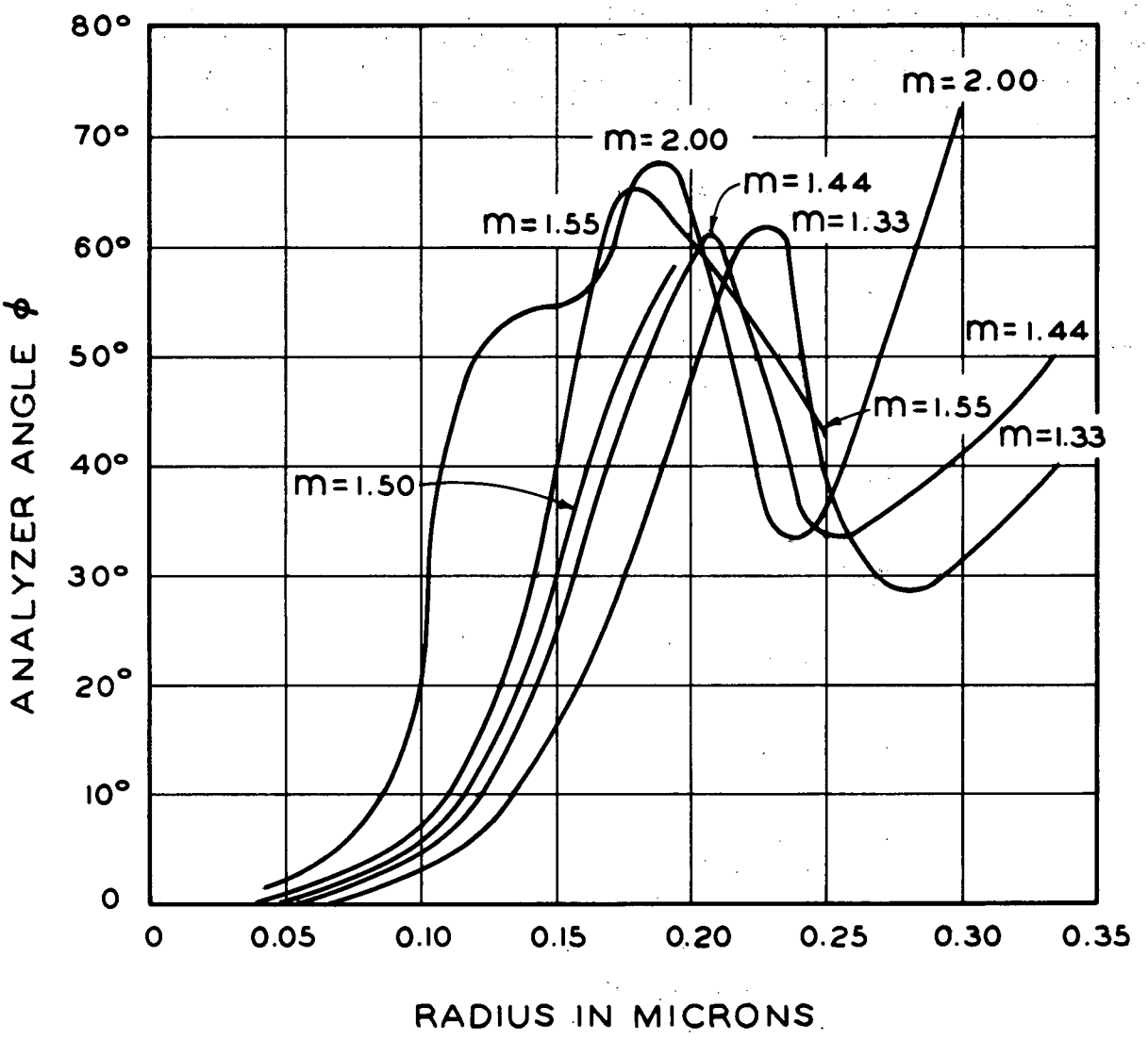

CALIBRATION CURVES FOR OWL

ANALYZER ANGLE ϕ VS REFRACTIVE INDEX m

FIGURE A3

That is,

$$L_a^2 + L_b^2 = A$$

(See Figure A2 in Appendix A).

Then for any given particle size angle ϕ_p a calculation may be made of the amplitudes L_a and L_b of light scattered from the particles in terms of ϕ_p and A such that the condition is fulfilled that each phototube sees equal intensity ($I_1 = I_2$) when the analyzers are set at $\phi = \phi_p$. From Figure A2

$$L_1 = L_a \sin \phi_p$$

$$L_2 = L_b \cos \phi_p$$

Therefore since

$$I_1 = I_2 = KL_1^2 = KL_2^2$$

then

$$L_1 = L_2$$

and

$$L_b = L_a \tan \phi_p$$

$$L_a^2 + L_b^2 = A$$

$$L_a^2 + L_a^2 \tan^2 \phi_p = A$$

$$L_a^2 = \frac{A}{1 + \tan^2 \phi_p}$$

$$L_b^2 = A - \frac{A}{1 + \tan^2 \phi_p}$$

$$L_b^2 = A \left[\frac{\tan^2 \phi_p}{1 + \tan^2 \phi_p} \right]$$

This gives L_a and L_b, the light amplitudes for any given A and particle size angle ϕ_p. Then, the light intensities, due to an aerosol of given particle size, seen by each of the phototubes at any setting ϕ of the analyzers follows from Figure A2:

$$I_1 = KL_1^2 = KL_a^2 \sin^2 \phi$$

$$I_2 = KL_2^2 = KL_b^2 \cos^2 \phi \quad .$$

Substituting the values for L_a and L_b:

$$I_1 = KA\left[\frac{1}{1 + \tan^2 \phi_p}\right] \sin^2 \phi$$

$$I_2 = KA\left[\frac{\tan^2 \phi_p}{1 + \tan^2 \phi_p}\right] \cos^2 \phi$$

Since the phototubes are connected as a differencing circuit, the error signal $\mathcal{E}$ is proportional to the difference in the light intensities seen by the phototubes,

$$\mathcal{E} :: I_1 - I_2 \quad .$$

Thus the error constant $d\mathcal{E}/d\phi$ is proportional to the difference in the rates of change of the phototube outputs with respect to analyzer angle ϕ.

$$\text{Error constant} \quad :: \frac{dI_1}{d\phi} - \frac{dI_2}{d\phi}$$

Since ϕ_p and A are fixed by the size and the number concentration of the particles being observed:

$$\frac{dI_1}{d\phi} = 2\ KA \left[\frac{1}{1 + \tan^2 \phi_p}\right] \sin \phi \cos \phi$$

$$\frac{dI_2}{d\phi} = -2\ KA \left[\frac{\tan^2 \phi_p}{1 + \tan^2 \phi_p}\right] \cos \phi \sin \phi$$

$$\frac{d\mathcal{E}}{d\phi} = K'A \left[\frac{1}{1 + \tan^2 \phi_p} + \frac{\tan^2 \phi_p}{1 + \tan^2 \phi_p}\right] \sin \phi \cos \phi$$

$$\frac{d\mathcal{E}}{d\phi} = K'A \sin\phi \cos\phi$$

K' = proportionality constant

Thus it is seen that the error constant is a function of ϕ the angular position of the analyzers, and A the total amount of light scattered by the particles.

Owl Angle ϕ	Error Constant $\frac{d\mathcal{E}}{d\phi}$
0°	0.00
10°	0.17 K'A
20°	0.32 K'A
30°	0.43 K'A
40°	0.49 K'A
45°	0.50 K'A
50°	0.49 K'A

The above table shows that as the particles become smaller (ϕ becoming smaller) the error constant also becomes smaller due to the characteristics of the polaroids. At the same time, A decreases rapidly with particle size (for a given number concentration) so that the combined effects make the instrument subject to increasingly greater error due to circuit drifts, etc., as the particle size decreases.

C. Correction for Stray Light

If there is no smoke in the chamber of the Servo Owl and the phototubes are perfectly balanced, there should be no signal fed into the servo motor and the Servo Owl should remain stationary at any setting of the analyzers. However, if the phototubes are illuminated by light reflected from the walls of the smoke chamber, the Servo Owl will assume a position such that equal light is seen by both phototubes in the same manner as if there were smoke in the chamber. If this stray light were polarized equally in both planes the analyzer position would be 45°. If unequal amounts of light are polarized in the respective planes the Owl will come to rest at some other analyzer angle which will be called ϕ_s, the stray light angle. It was found that ϕ_s may be changed by changing the focus of the scattering lamp or by the insertion of a foreign object in the smoke chamber, but otherwise the stray light angle remains essentially constant from day to day.

It was desired to determine the amount of error due to the presence of stray light and the following equation was developed for this purpose:

$$\phi = \tan^{-1} \frac{(\sqrt{C}-1) \tan\phi_1 \tan\phi_2 + (\tan\phi_1 - \sqrt{C} \tan\phi_2) \tan\phi_s}{(1 - \sqrt{C}) \tan\phi_s + \sqrt{C} \tan\phi_1 - \tan\phi_2}$$

Where,

ϕ = Owl analyzer angle corresponding to actual particle size.

ϕ_1 = Owl angle at an arbitrary smoke concentration.

ϕ_2 = Owl angle at a concentration C times that used to obtain ϕ_1.

ϕ_s = Stray-light Owl angle, ("no smoke" angle).

C = Concentration change factor, (i.e., C = 2 if concentration is doubled).

The true particle angle may be obtained from the above equation by taking two Owl readings at different concentrations of the same smoke. (This equation has not been thoroughly checked experimentally, but rough checks indicate that it is correct.)

D. Notes on Servo Owl

Procedure for Adjusting Gains and Zeroing Owl

1. With lamp selector switch in "Standard" position, push standard lamp into smoke chamber and turn on power and lamp switches.

2. Allow unit to warm up for approximately ten minutes.

3. Turn off lamp switch and stop motor rotation with coarse and fine balance controls. This is best done by watching motor, but balance is also indicated by a steady minimum reading on panel meter.

4. Turn on lamp switch and let motor come to rest. If rest point is not at 45°, adjust A and/or B phototube gain potentiometers to bring analyzer angle to 45°.

5. Retract standard lamp from smoke chamber, and place lamp selector switch in "Scattering" position. Analyzers will probably come to rest at some "Stray-light angle" other than 45°.

6. Turn on cooling water to scattering lamp. Servo Owl is now ready for operation.

Indications on Panel Meter. With both lamps off, circuit balance is indicated by steady needle at minimum deflection.

With either scattering or standard lamps on, and the analyzers at the position of balance, the needle will be unsteady as circuit noise cause motor to chatter.

When motor is bringing analyzers into balance position, needle will have a steady deflection, dropping back as balance is approached.

If meter reads off scale and motor is not running, this indicates that the limit switch, set at approximately 0° and 50° analyzer angle, has opened the motor circuit. When this happens, the analyzers must be rotated back within the operating region by hand.

If needle is relatively steady with either lamp on and with the analyzers at balance position this indicates that too much light is overloading the circuits and smoke concentration or light intensity should be reduced. If this fails to restore the sensitivity there may be trouble in the Brown amplifier.

General Operating Notes. The scattering lamp is replaced by loosening thumb screws on the housing. When the lamp is replaced it should be centered horizontally with the set screws and vertically with the threaded adjustment.

Operation on either side of the analyzer zero angle may be obtained by reversing the phototube signal leads.

When the circuit can no longer be zeroed, batteries in a case at the back of the chassis need replacing.

The circuit should be zeroed with standard light intensity such that the phototubes see approximately the same amount of light that they will see scattered from the smoke.