CENTRAL RESEARCH LIBRARY
DOCUMENT COLLECTION

MARTIN MARIETTA ENERGY SYSTEMS LIBRARIES
3 4456 0360695 2

ORNL 1666
Instrumentation
Cy. 4

CENTRAL RESEARCH LIBRARY
DOCUMENT COLLECTION
LIBRARY LOAN COPY
DO NOT TRANSFER TO ANOTHER PERSON
If you wish someone else to see this document, send in name with document and the library will arrange a loan.

SOLID AEROSOL GENERATION

W. D. Cottrell

CONDUCTED JOINTLY BY

OAK RIDGE NATIONAL LABORATORY
HEALTH PHYSICS DIVISION
OPERATED BY
CARBIDE AND CARBON CHEMICALS CO.

RADIOLOGICAL DIVISION
CHEMICAL CORPS
CML. AND RAD. LABORATORIES
ARMY CHEMICAL CENTER, MARYLAND

ORNL 1666

Copy No. 4

Contract No. W-7405-eng-26

HEALTH PHYSICS DIVISION

SOLID AEROSOL GENERATION

W. D. Cottrell

PROTECTIVE EQUIPMENT EVALUATION PROGRAM

(In Cooperation with the Army Chemical Corps)

E. G. Struxness, Group Leader

DATE ISSUED

JAN 20 1954

OAK RIDGE NATIONAL LABORATORY
Operated by
CARBIDE AND CARBON CHEMICALS COMPANY
A Division of Union Carbide and Carbon Corporation
Post Office Box P
Oak Ridge, Tennessee

MARTIN MARIETTA ENERGY SYSTEMS LIBRARIES
3 4456 0360695 2

INTERNAL DISTRIBUTION

1. C. E. Center
2. Biology Library
3. Health Physics Library
4-5. Central Research Library
6. Reactor Experimental Engineering Library
7-11. Laboratory Records Department
12. Laboratory Records, ORNL R.C.
13. C. E. Larson
14. W. B. Humes (K-25)
15. L. B. Emlet (Y-12)
16. A. M. Weinberg
17. E. H. Taylor
18. E. D. Shipley
19. K. Z. Morgan
20. F. C. VonderLage
21. R. C. Briant
22. C. P. Keim
23. J. H. Frye, Jr.
24. J. A. Swartout
25. S. C. Lind
26. R. S. Livingston
27. F. L. Culler
28. A. H. Snell
29. A. Hollaender
30. M. T. Kelley
31. T. A. Lincoln
32. A. S. Householder
33. C. S. Harrill
34. C. E. Winters
35. D. W. Cardwell
36. J. A. Lane
37. E. E. Anderson
38. D. D. Cowen
39. E. G. Struxness
40. J. W. Thomas
41. E. E. Grassel
42. R. L. Bradshaw
43. B. G. Saunders
44-45. W. D. Cottrell
46. M. J. Skinner

EXTERNAL DISTRIBUTION

47. R. F. Bacher, California Institute of Technology
48. G. E. Thoma, USAF
49-98. Army Chemical Center, Maryland
99-347. Given distribution as shown in TID-4500 under Instrumentation Category

DISTRIBUTION PAGE TO BE REMOVED IF REPORT IS GIVEN PUBLIC DISTRIBUTION

TABLE OF CONTENTS

	Page
ABSTRACT	1
INTRODUCTION	1
EXPERIMENTAL	2
Vibrating Capillary	2
Capillary Mounted on Rotating Disc	4
High Speed Air Top	7
Operation	12
Drop Size	13
Bursting Speed	14
Shielding	16
Useful Production Rate of Aerosol	16
Drying Liquid Droplets to Form Solid Particles	17
CONCLUSIONS	22

SOLID AEROSOL GENERATION

W. D. Cottrell

ABSTRACT

The problem under investigation was that of generating a solid homogeneous aerosol in sufficient concentration to permit its use as a test aerosol. The method of approach was that of generating an aerosol of homogeneous liquid droplets from a suitable solution and drying the droplets to form solid particles of the solute.

Several types of generators were investigated with the most promising being a high speed air top. The air top was rotated at speeds up to approximately 100,000 rpm and gave liquid droplets as small as 20 μ in diameter. The minimum size of solid particles that could be produced from these liquid droplets was not determined.

INTRODUCTION

One of the difficulties encountered in the study of penetration of filter media by small particles is the time consuming task of determining the particle size distribution of the aerosol both before and after the filter media. Difficulties of the same nature are encountered in the study of filtration theory and in the determination of the health hazard associated with breathing small radioactive particles.

An alternate approach to any of these problems would be the use of a homogeneous instead of a heterogeneous aerosol. If this were done the

problem of determining particle size distribution would then be reduced to the less difficult one of determining particle count. The chief drawback to using a homogeneous aerosol is the great difficulty with which a homogeneous aerosol is produced. Moreover, if one is successfully produced the range over which the size may be varied is usually limited. If a generator could be perfected that would overcome these difficulties; the study of the behavior of small particles would be somewhat simplified.

This investigation was undertaken in an effort to determine the feasibility of producing a solid homogeneous aerosol from liquid droplets by drying the droplets to form solid particles. This work could be divided conveniently into two phases: (1) generating uniform liquid droplets in sufficient numbers to give the desired concentration of aerosol, and (2) drying the droplets in such a manner as to obtain a solid homogeneous aerosol. The former has been investigated and is reported here. Information pertinent to the second phase was obtained from work done in connection with another problem and is presented in conjunction with this report.

EXPERIMENTAL

Vibrating Capillary

Initially, Vonnegut's[1] method of producing uniform liquid droplets by means of a vibrating glass capillary was investigated. Capillaries were made from glass tubing and vibrated by means of an air jet, using 10 to 15 psi pressure. Reference to Figure 1 will show the general arrangement of the generator and the relative positions of the capillary and the air jet. This figure is a reproduction of a sketch given in the reference cited on this page.

1. Vonnegut, Bernard and Raymoun Neufauer, Occasional Report No. 29, Project Cirrus, "Detection and Measurement of Aerosol Particles by Use of an Electrically Heated Filament," RL-555, September 1, 1951.

UNCLASSIFIED
DWG. 22623

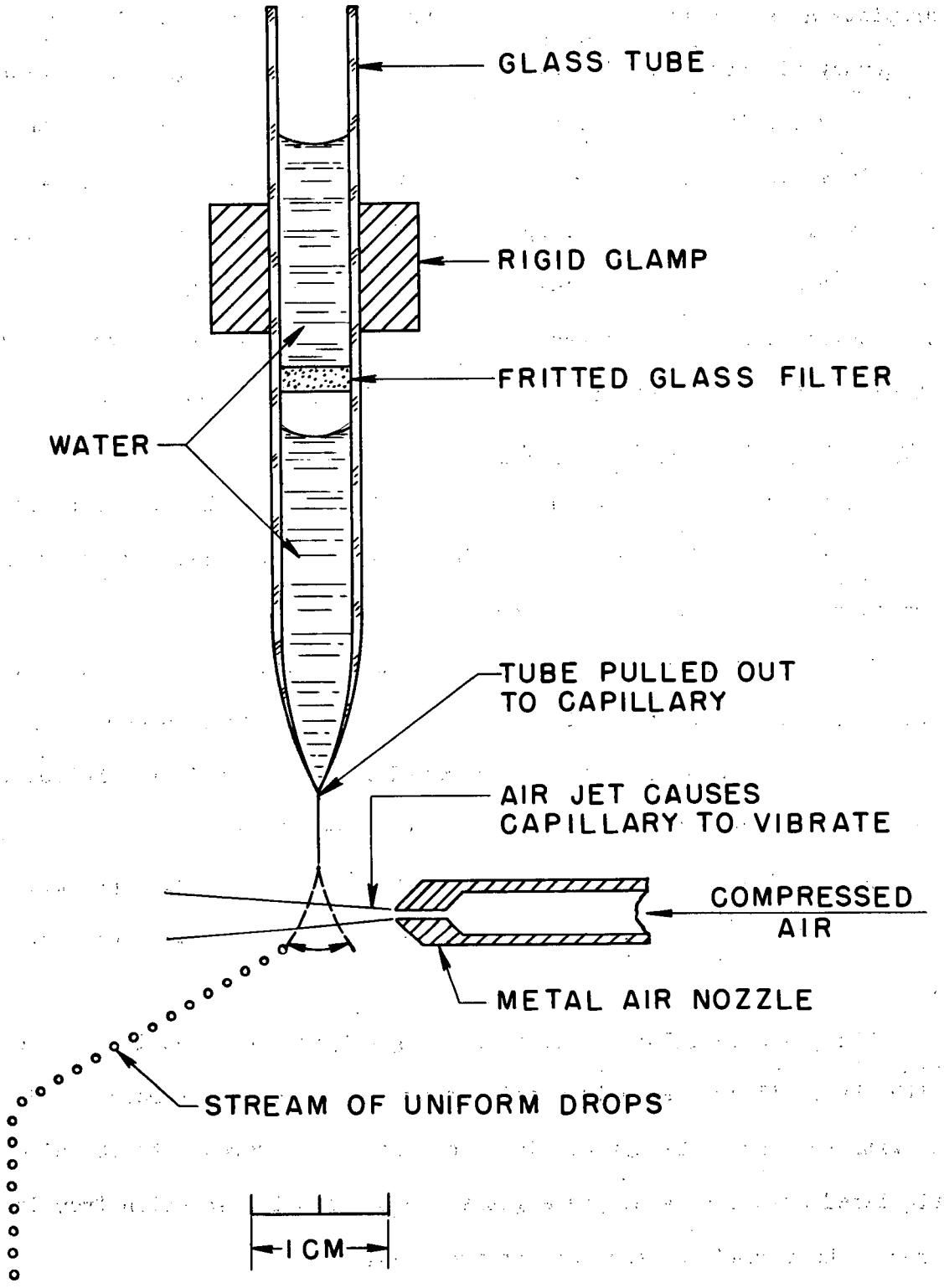

FIG. 1 - VIBRATING CAPILLARY APPARATUS FOR PRODUCING UNIFORM DROPS

Vonnegut reported that he had successfully used this method to produce droplets as small as 8 μ in diameter when the capillary was driven at a frequency of approximately 10,000 cps by an air jet using 10 psi pressure.

It was difficult to keep the jet adjusted so that the tip of the capillary described the same path for any length of time. This, of course, resulted in droplets of varying sizes. The method was soon abandoned as being too difficult to control and not capable of giving the concentration of droplets desired for a test aerosol. Rather than vibrate the capillary, it was decided to rotate multiple capillaries at high speeds.

Capillary Mounted on Rotating Disc

This type generator consists of the frustum of a hollow brass cone with a glass capillary mounted so that it extends out radially from the periphery of the base of the cone.

The frustum is mounted so that the axis of the capillary is horizontal and is rotated about the axis of the frustum by means of a centrifuge motor. A solution of the aerosol to be generated is contained in the hollow frustum and is fed through the capillary by centrifugal force.

Figure 2 shows the head assembly mounted on the centrifuge shaft in its operating position. During operation this assembly is encircled by a lucite shield.

The glass capillary is mounted using a hypodermic needle as a holder with the capillary being threaded through the base of the needle and sealed in with shellac. The hypodermic needle is then screwed into the disc and tightened down onto a neoprene gasket to prevent the solution from leaking around the threads on the base of the needle.

UNCLASSIFIED
PHOTO 11732

FIGURE 2. ROTATING DISC FOR THE PRODUCTION OF UNIFORM DROPLETS.

A Strobotac was used to measure the speed of the rotating disc and to observe the droplet formation on the end of the capillary. For the observation of large droplets the Strobotac was adequate, but for smaller ones it was necessary to use a white light focussed in such a manner that the droplets could be observed as they crossed the beam of light.

The size of the droplets was determined by catching them in oil and measuring them with the aid of a filar micrometer and an optical microscope. A solution of methylene blue was used as a test solution for the study of drop formation.

Various combinations of capillary sizes and rates of rotation of the disc were tried in an effort to determine the feasibility of this method of generating aerosols. With this apparatus the smallest capillary used had a bore of approximately 13 μ and gave droplets of approximately 50 ± 7.5) μ in diameter when revolved at 6500 rpm.

The maximum speed at which any given capillary may be used is the speed at which the capillary acts as a jet. When this happens, droplets of more than one size are given off and the purpose of the generator (to produce homogeneous liquid droplets) is defeated.

Using this generator with a single capillary to produce an aerosol of sufficient concentration to be used for penetration studies would require a time interval so long that it would be impractical. The addition of more capillaries would introduce the difficult task of getting all capillaries to produce the same size droplets.

This instrument as used here would be practical only for producing a homogeneous aerosol of liquid droplets of 50 μ diameter or greater and of very low concentration.

High-Speed Air Top

The air-driven, air supported high-speed top of Beams[2] was first adapated for use as a spinning disc sprayer by Walton and Prewett[3], and later improved by May[4]. In these investigations, liquid fed onto the center of a flat rotating surface was flung off the edge of the surface as a mist. The mist thus obtained consisted of three drop sizes; the main body of droplets, satellite droplets, and a few droplets much larger in size than the main body of droplets.

The main body of the droplets produced in this manner can be made very nearly homogeneous and it is this fraction of the mist that may be used in producing a solid homogeneous aerosol. The size of the liquid droplets is controlled by the speed of rotation. An additional control on the size of the solid particles may be obtained by varying the concentration of the feed solution.

An apparatus was built incroporating the improvement of K. R. May[5], using the air that drives the rotor to remove the unwanted satellite drops. Figure 3 shows the assembled apparatus ready for operation. The model in this photograph shows outlets in the ring of tubing used to support the assembly. These were originally used as exhausts for the working air but were later eliminated when found to cause vibration and instability of the rotor. Ports were cut in the base to allow the working air to be exhausted

---

2. Beams, J. W., "High Rotational Speeds," Journal of Applied Physics 8, 795, December 1937.
3. Walton, W. H. and W. C. Prewett, "The Production of Sprays and Mists of Uniform Drop Size by Means of Spinning Disc Type Sprayers," Sec. B, Proceedings of The Physical Society 62, Part 6, 23, June 1, 1949.
4. May, K. R., "An Improved Spinning Top Homogeneous Spray Apparatus," Journal of Applied Physics 20, 933, October 1949.
5. Ibid. p. 933.

UNCLASSIFIED
PHOTO 11776

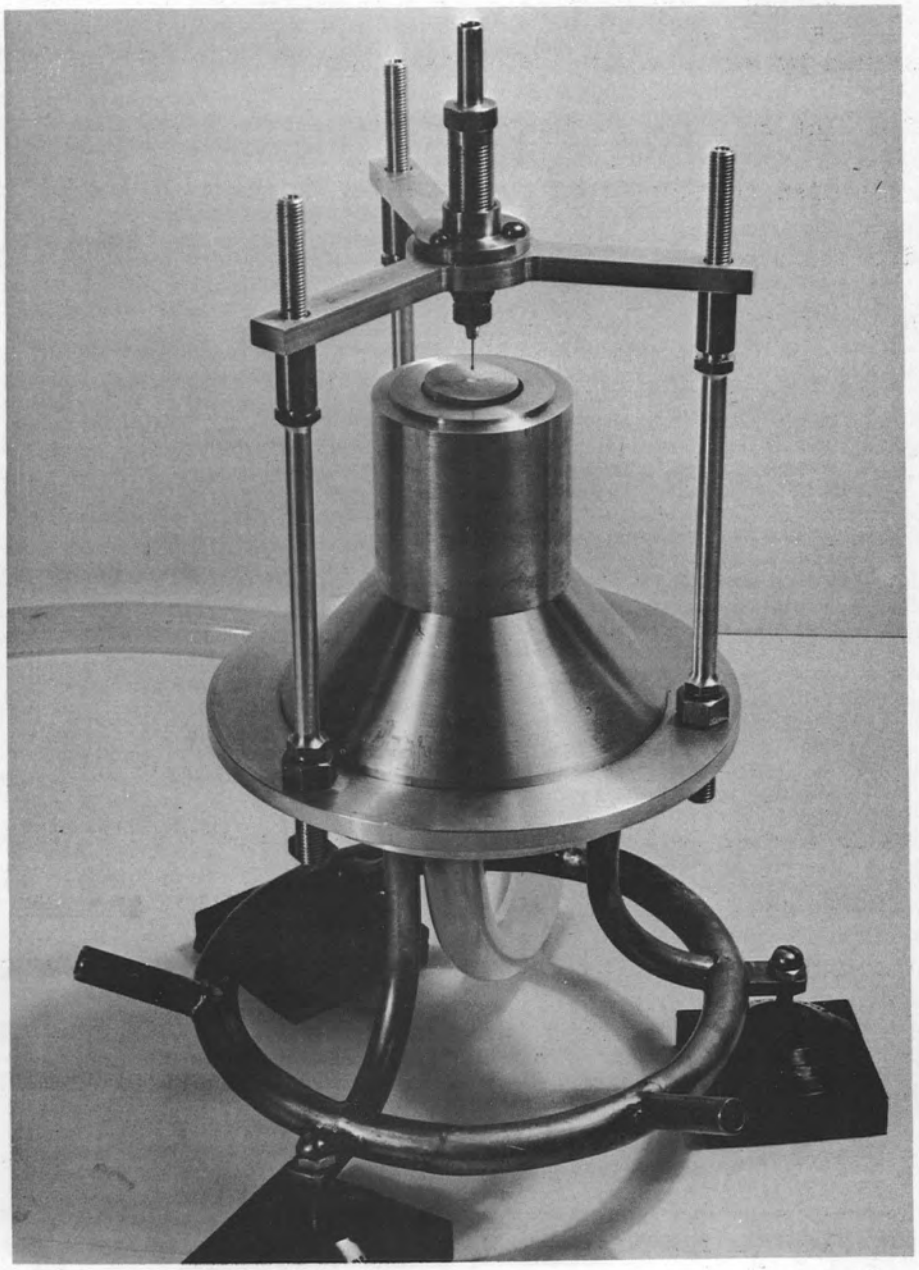

FIGURE 3. SPINNING TOP APPARATUS.

without going through the pipes. Figure 4 is a scale diagram of the apparatus with a section cut away showing the essential operating parts and their relation to each other. The working air is introduced into the cylinder through the opening in the base, emerges through the jets in the stator, strikes the flutes in the rotor and causes the rotor to turn. The spent working air follows the path designated by arrows in Figure 4 and is exhausted through the ports in the base of the housing. The feed mechanism is a spider supported by three rods tapped into the ring at the base of the housing. The hub into which the hypodermic needle holder is screwed is movable relative to the spider, thus allowing the needle to be adjusted over the exact center of the spinning rotor. The height of the needle above the top is adjusted by screwing the needle holder in or out of the hub. The housing screws onto the base and when adjusted is held rigidly in place by set screws. The gap between the housing and the stator lip is adjusted by screwing the housing up or down on the base. The whole assembly is supported by three legs fabricated from thin walled pipe, brazed or soldered into the brass base and ending with three adjustment screws for leveling. When operating, the legs (leveling screws) should be supported on balance pads and these set on a sheet of sponge rubber supported by a rigid surface. The rotor will not spin smoothly if the apparatus is clamped or restrained in any manner.

The stator and rotor are shown in greater detail in Figures 5a and 5b, respectively. The angle of the stator cone is 91° and the jets are bored so as to emerge about halfway up the slant face of the cone. Several rotors and stators having different rotor and stator angles were fabricated and tested. Of all the combinations tried the stator and rotor shown in Figures 5a and 5b gave the best results. Most of the others were either unstable

UNCLASSIFIED
DWG. 22624

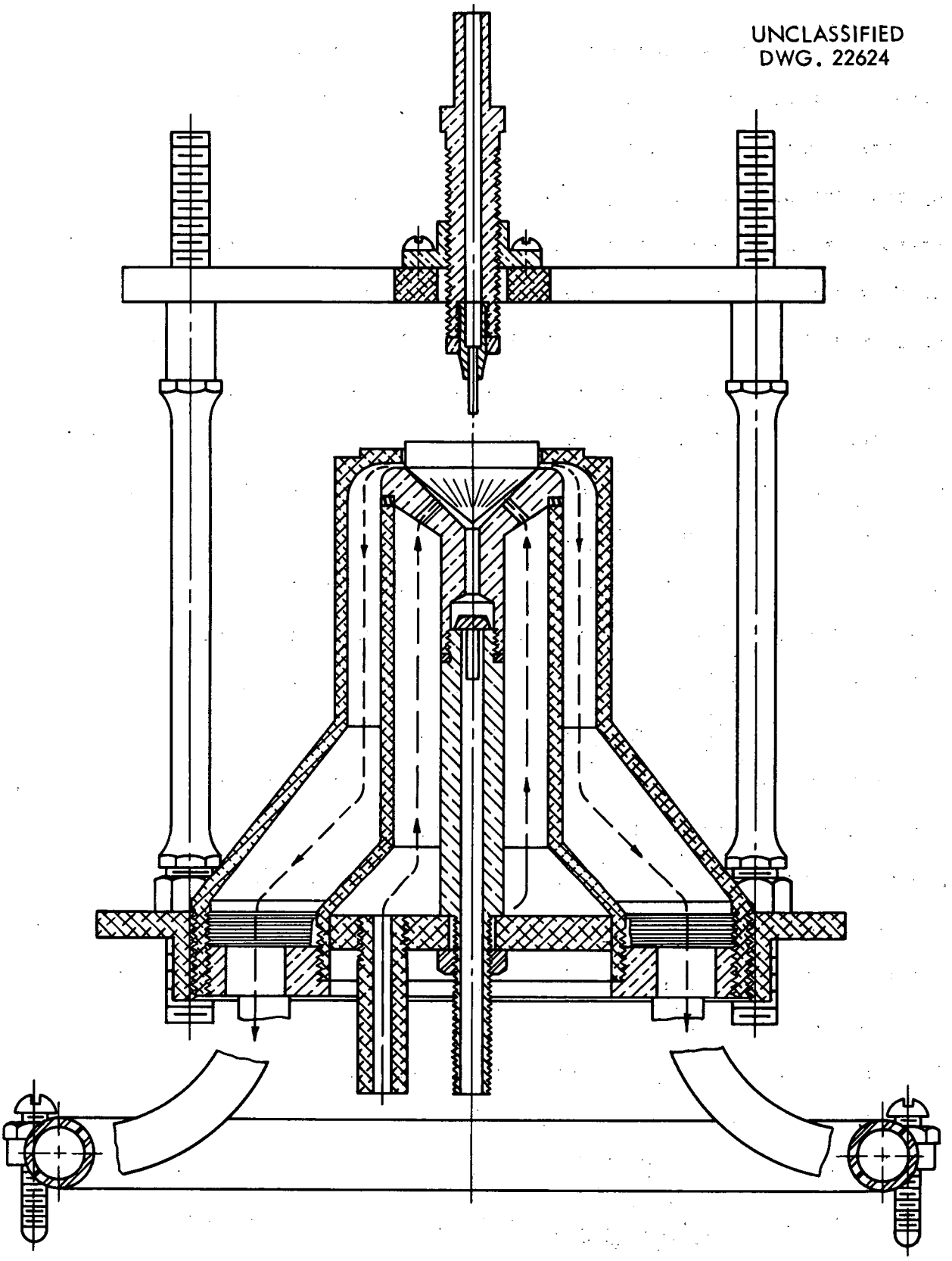

FIGURE 4

AIR TOP ASSEMBLY

INCH

UNCLASSIFIED
DWG. 22625

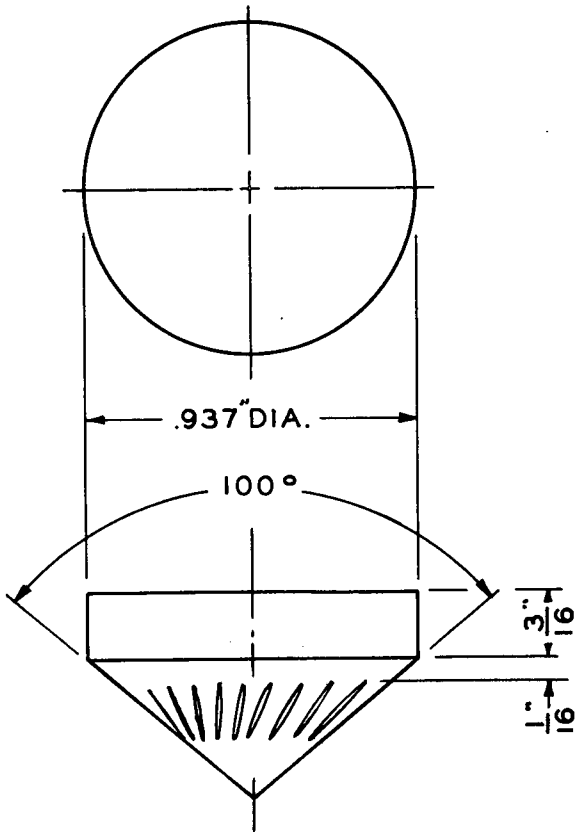

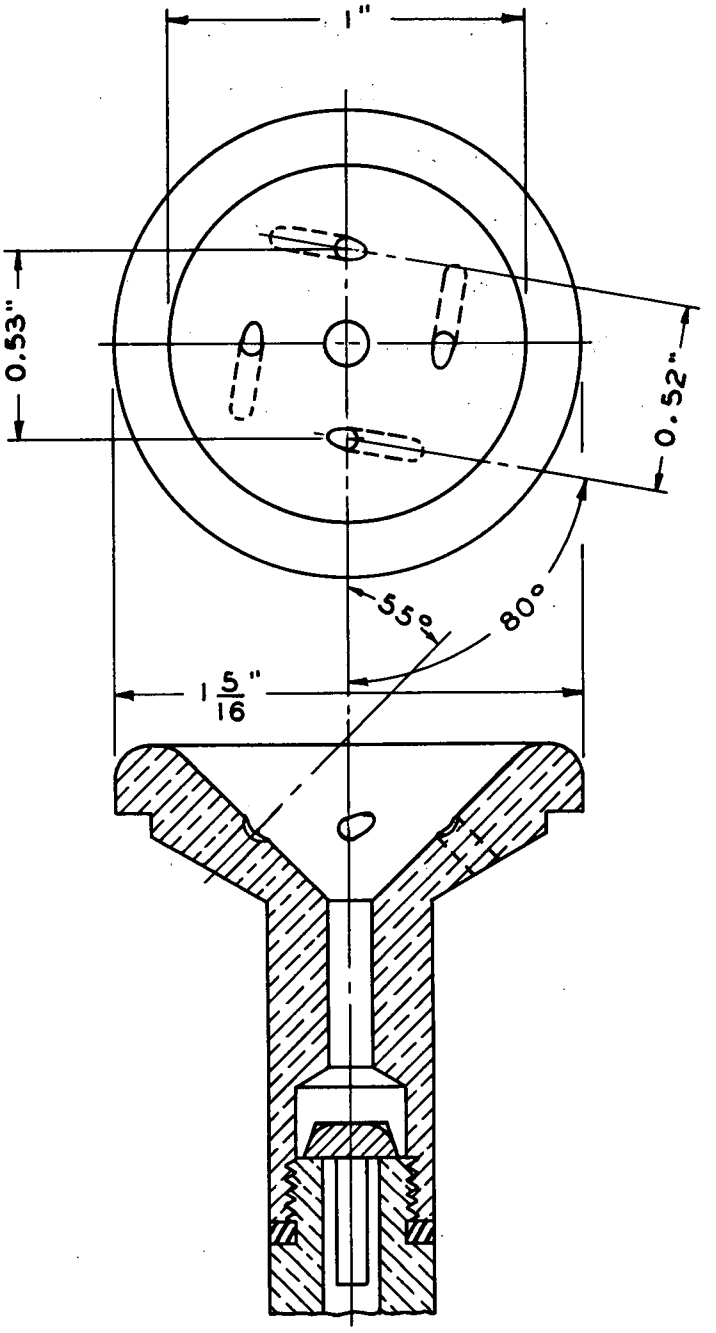

NOTES

1. 40 FLUTES INCLINED AT 10° CUT WITH -
   1 1/2" DIA. 45° CUTTER
2. WITHOUT TRAVERSING EITHER THE CUTTER OR THE TOP, BRING THE TOP INTO CONTACT WITH THE CUTTER & CUT ARC SHAPED FLUTE .250" LONG.

MATL. DURALUMIN 24 ST

FIGURE 5

A. DETAIL OF TOP

B. DETAIL OF STATOR

or gave precession of the rotor at one or more speeds of rotation.

Operation. The top runs smoothly at low air pressures (1.5 psi) and the pressure can be varied rapidly with no adverse effect on the stability of the top. As can be seen from Figure 5b, provisions were made for a mushroom valve to be installed in the stem of the stator. This was found to be unnecessary for the conditions under which the apparatus was used. This valve is necessary when the top is operated at very low air pressures and is helpful when starting and stopping the top. The gap between the stator and the housing is adjusted until the rotor runs satisfactorily. This is of the order of 1/32".

After the top is running smoothly at the desired speed the feed mechanism is centered and adjusted to the proper height above the flat surface of the top. The clearance between the feed mechanism and the surface should be such that the feed liquid flows onto the surface of the top rather than droping onto the surface. If the liquid is fed onto the top dropwise or if there is partial drop formation this will result in a heterogeneous mist being flung off the rotor.

As was pointed out previously the working air follows the path indicated by the arrows in Figure 4, thus creating an inward flow of air through the gap between the housing and the rotor. This inward flow of air draws the smaller satellite drops into the gap and from there they are carried along with the spent working air and are either exhausted with it or impacted on the internal surface of the apparatus. The housing is fitted with plastic rings and a plastic plate is supported above the top by the rods that support the feed mechanism. The height of this plate is adjustable allowing the gap between the ring and plate to be varied. This adjustment is necessary to insure that proper separation of the satellite and main drops is effected

at all rotor speeds. It becomes necessary when operating at very high speeds to remove the plastic plate and ring completely; the vacuum produced in the gap between the rotor and the housing being sufficient to draw off the satellite drops.

Drop Size. The main drop size is given by the equation of Walton[6]

$$d = \frac{K}{W \left(\frac{D \rho}{\tau}\right)^{1/2}}$$

where,

d = diameter of drop in cm

W = angular velocity of top in radians/sec

D = diameter of rotor in cm

ρ = density of liquid used in gm/cm^3

τ = surface tension of liquid used in dynes/cm

K = constant

The value of K obtained in the present experiments agrees well with the value obtained by Walton. Walton found K to range from 2.67 to 6.55 with an average value of 3.8. The present experiment gave a value for K of approximately 3.2. This value was determined using dioctyl phthalate as a feed solution and at rotor speeds up to 1×10^5 rev/min.

Droplets of dioctyl phthalate as small as 20 μ in diameter were generated when the top was driven at approximately 100,000 rpm. The non-homogeneity of the droplets was approximately $\pm$ 10%. Complete performance data, i.e.,

---

6. Walton, W. H. and W. C. Prewett, Op. Cit.

speed vs. drop size and speed vs. air pressure curves, have not been obtained at this writing. However, a portion of the speed vs. air pressure curve is given in Figure 6. The upper figure of approximately 28.7 psi air pressure given here was the maximum pressure available in the laboratory where the experiment was carried out. At this pressure the top rotated at 107,000 rpm.

Bursting Speed. The estimated bursting speed of the top used was 420,000 rpm. This was obtained from the relation given by Nadai[7] for the fracture of solid cylindrical rotors. The peripheral velocity at which the first yield will occur is given by

$$U' = 2\, U_o \sqrt{\frac{2(1 - \nu)}{3 - 4\nu}}$$

where

$$U_o = \sqrt{\frac{\sigma_o\, g}{\lambda}}$$

and

ν = Poissons ratio

σ_o = yield stress

λ = specific weight

$g = 32 \text{ ft/sec}^2 = 384 \text{ in./sec}^2$.

For Duralumin 24S-T

$\sigma_o = 43{,}000 \text{ lbs/in.}^2$

$\nu = 1/4$

$\lambda = 0.10 \text{ lbs/in.}^3$.

This gives

$U' = 2.2 \times 10^4$ in./sec as the peripheral speed at which first yield will occur. For a rotor 1" in diameter this gives a value for the bursting speed of about 420,000 rev/min.

7. Nadai, "Theory of Flow and Fracture of Solids," 2nd Edition, New York, McGraw-Hill, 1950, pp. 482-485.

UNCLASSIFIED
DWG. 22626

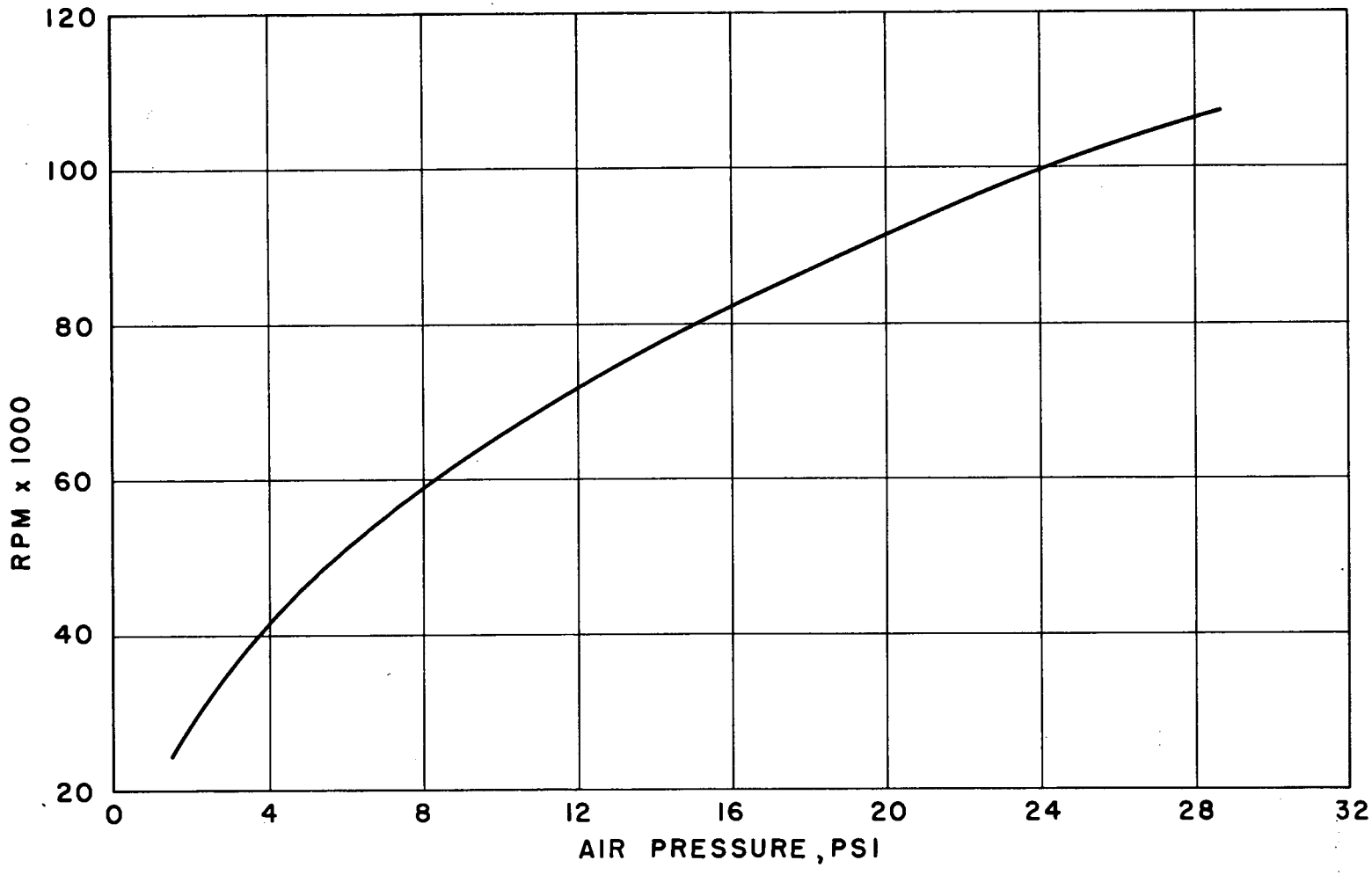

FIGURE 6. SPEED VS AIR PRESSURE CURVE.

Shielding. Although the top was rotated at only a fraction of its estimated bursting speed, a shield made of 3/4" lucite was used to encircle the top assembly when in operation. This was done as a safety measure in case of accidents such as the top becoming unstable and jumping its stator or an explosion occurring well below the bursting speed of the top due to internal flaws in the material from which the top was fabricated. This shield was not intended to act as an absolute safeguard against the flying fragments of an exploding top since no tests have been made to determine its stopping power. Other investigators[8,9] recommend that a short section of a cannon barrel or at least 1" of heat treated nickel-steel be used as a shield against exploding rotors.

In order to use this top safely to produce very small droplets it would be necessary to check the accuracy of the estimate of the bursting speed of the rotor. This could be done by making several identical rotors and exploding them, then operating the rotor well below this speed when generating droplets routinely. The speed determined in this manner would determine the minimum droplet size that could be generated with this particular rotor. To go below this size would require speeds approaching the bursting speed of the rotor and this would necessitate shielding the whole assembly.

After this practical minimum droplet size is determined, two questions are of immediate interest. They are: In what numbers can these drops be produced and what is the size and nature of the solid particles obtained from these droplets? These two questions are considered below.

Useful Production Rate of Aerosol. Knowing the rate of feed of the liquid used to produce the aerosol and measuring the size of the particles produced, the rate of production of the aerosol can be estimated from the

---

8. Bauer and Pickels, J. Bact. 31, 53, 1936; J. Exp. Med. 65, 565, 1937.
9. Pollock and Collie, Nature 137, 950, 1936; The Engineer 166, 102, 1937.

relation

$$\text{Particles/min} = \frac{\text{Volume of feed solution/min}}{\text{Volume/particle}} .$$

Assuming a maximum feed rate of 1 cc/min for the production of 10 μ droplets,

$$\text{Particles/min} = \frac{(1 \times 10^4)^3}{4/3 \times 3.14 \times 5^3}$$

$$= \sim 2 \times 10^9 \text{ particles/min produced by the rotating top.}$$

Assuming a useful concentration of 10^5 particles/cc for a test aerosol, the maximum flow rate at this particle concentration is

$$\frac{2 \times 10^9}{1 \times 10^5} = 2 \times 10^4 \text{ cc/min}$$

or 20 liters/minute. Correcting for the volume of feed solution that goes to make satellite and large droplets gives a maximum useful flow rate of perhaps 15 liters/minute.

Drying Liquid Droplets to Form Solid Particles

The size of solid particles produced from liquid droplets will depend, of course, on the concentration of the solute in the feed solution. The solid particle diameter would be given by

$$d = D/\sqrt[3]{1/C}$$

where d and D are the diameters of the solid particles and the liquid droplets respectively, and C is the fraction (by volume) of the solute in the feed solution. The size reduction to be gained in this manner has not been

determined by experiment but it seems there would be a practical limit beyond which a further reduction in the concentration of the feed solution would not be feasible. This limit would probably be the point at which the volume of the impurities in the solvent becomes significant when compared to the volume of solute in the feed solution.

The nature of the solid particle formed when the solvent is evaporated would depend somewhat on the purity of the solute used in making the feed solution. Previous work on methylene blue[10] has yielded some pertinent information on this point. Solid methylene blue aerosol was generated in the standard Army Chemical Corps methylene blue machine. In this machine a solution of methylene blue was aspirated and the liquid drops dryed to form solid particles of methylene blue. Three different feed solutions were used. The first was made from commercial stock methylene blue, the second from synthesized methylene blue, and the third from synthesized radioactive methylene blue (S^{35} tagged). Samples of aerosol generated from a 1% solution of each of the three methylene blues were collected by means of a thermal precipitator and studied by electron microscopy.

Figures 7, 8, and 9, show the differences in the particles obtained from these three solutions. The commercial stock methylene blue particles, Figure 7, seem to be spheres while the radioactive methylene blue particles, Figure 9, appear to be crystalline in nature with each individual particle made up of a number of crystals. The synthesized methylene blue particles, Figure 8, seems to lie somewhere in between the other two in appearance.

---

10. "Protective Equipment Evaluation Program," Quarterly Progress Report Y-687, July 1, 1950 to September 30, 1950, p. 26-27.

UNCLASSIFIED
PHOTO 0932-5

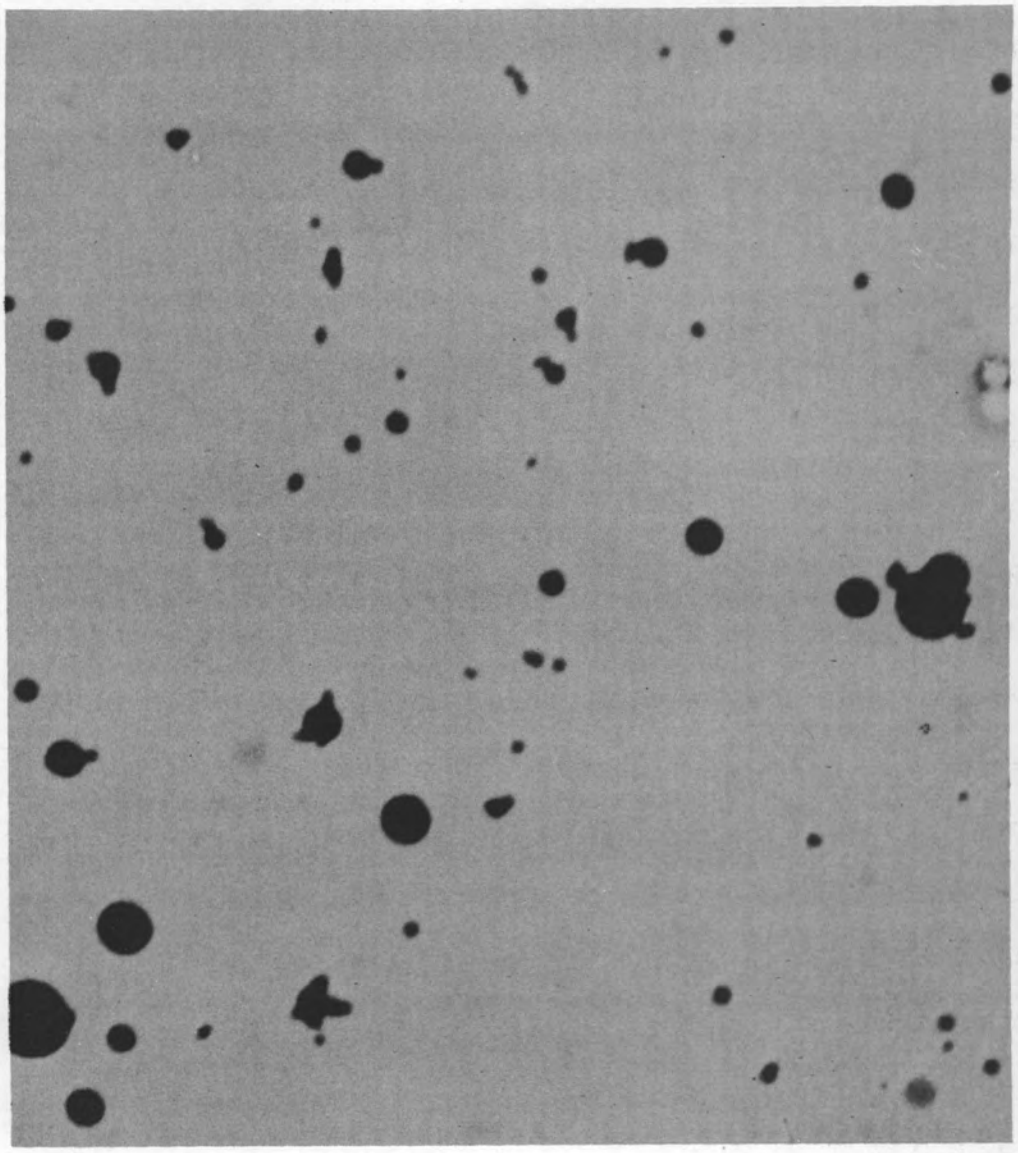

FIGURE 7. ELECTRON PHOTOMICROGRAPH (15,000X) OF STOCK METHYLENE BLUE.

UNCLASSIFIED
PHOTO 0863-3

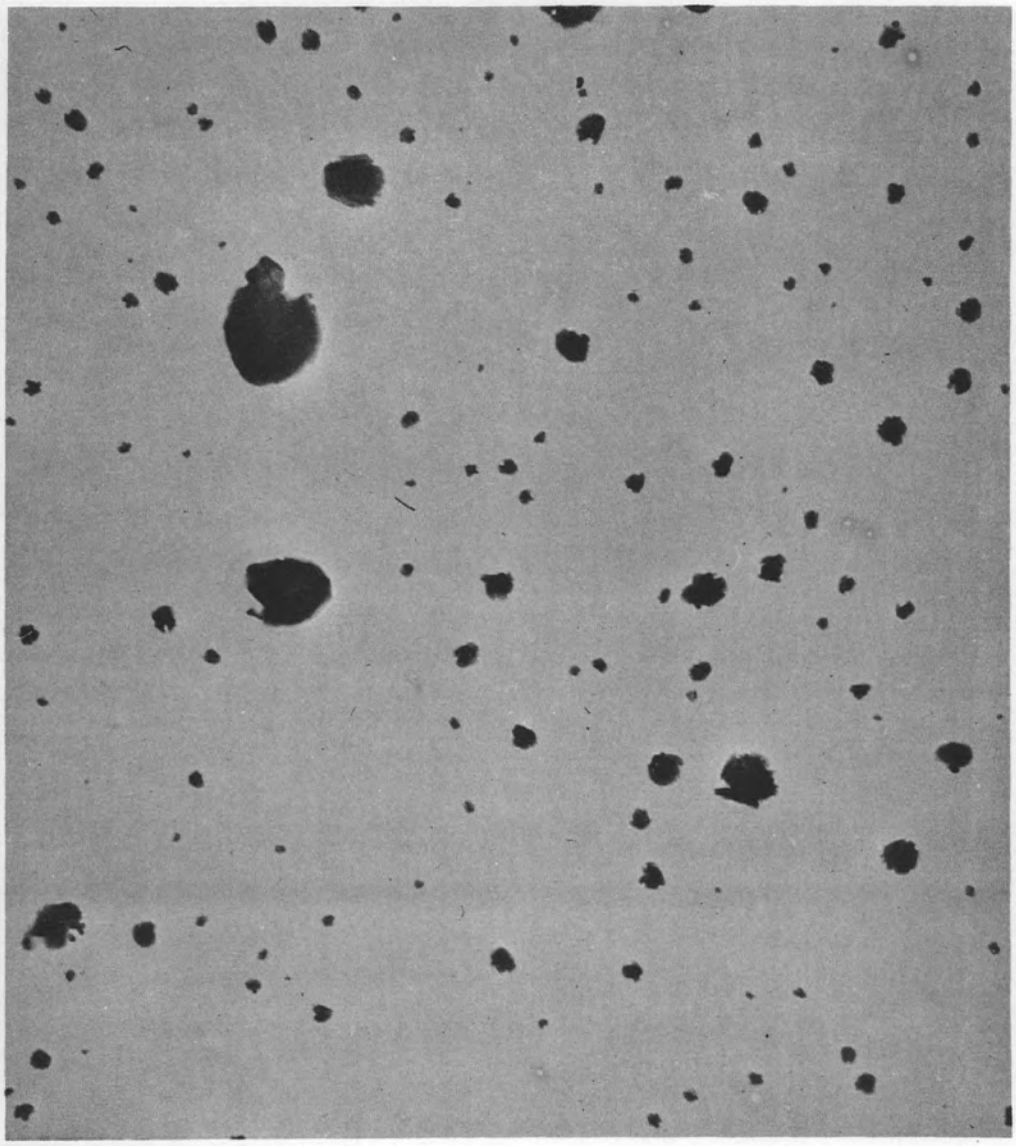

FIGURE 8. ELECTRON PHOTOMICROGRAPH (15,000X) OF SYNTHESIZED METHYLENE BLUE.

UNCLASSIFIED
PHOTO 0807-4

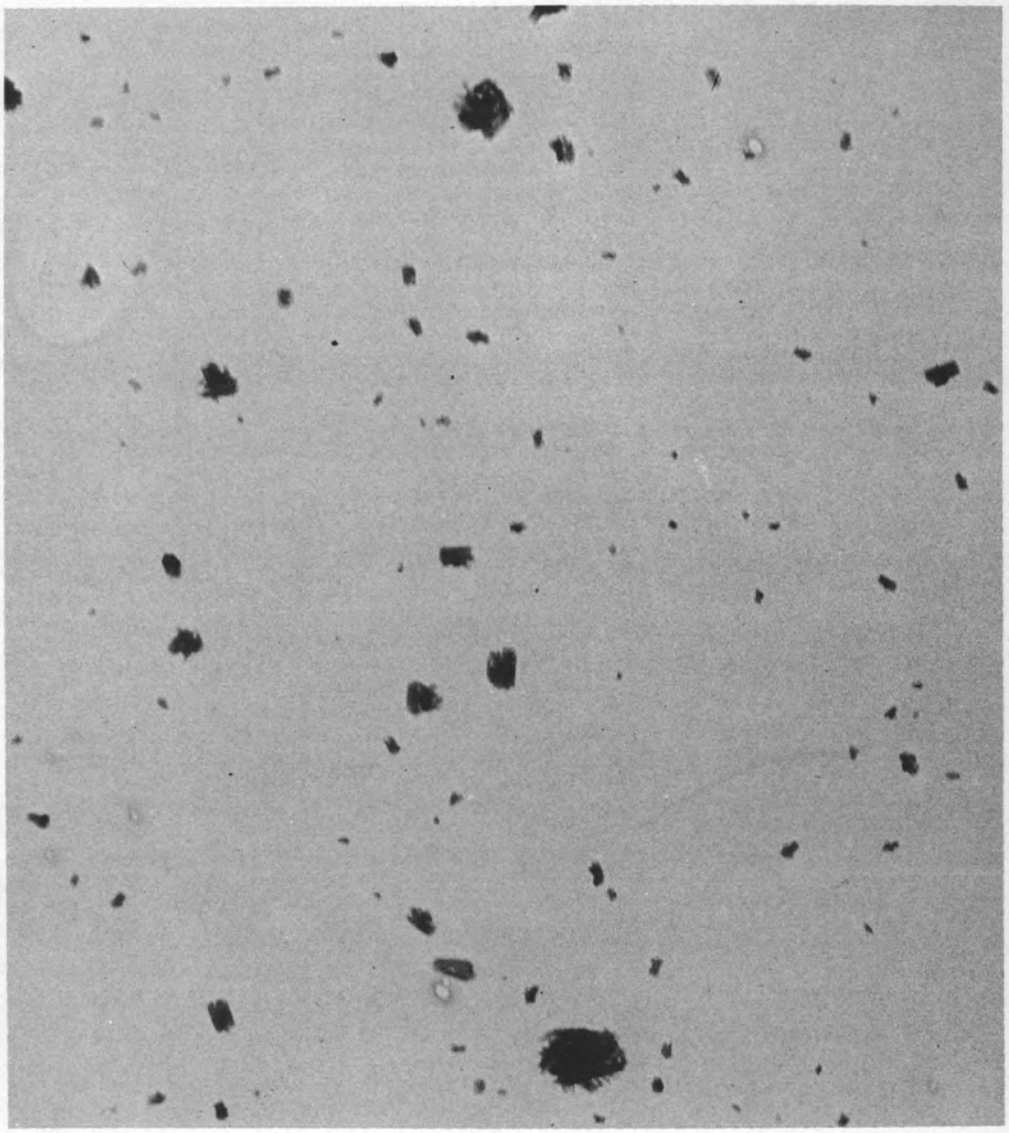

FIGURE 9. ELECTRON PHOTOMICROGRAPH (15,000X) OF SULFUR TAGGED METHYLENE BLUE.

They are more irregular in shape than the stock methylene blue particles and have a smaller tendency to be crystalline in structure than the radioactive methylene blue.

The reason for these differences is not apparent but two possibilities that suggest themselves are: (1) differences in the drying process, and (2) differences in impurities contained in the methylene blue compounds from which the solutions were made. Since all samples were generated and dried in the same machine and since these differences have been observed on several occasions, it appears that the differences in particle appearance may be due to the second above. This is further borne out by the fact that the particles of S^{35} tagged methylene blue and of the synthesized inert methylene blue resemble each other more closely than either resembles the stock methylene blue. The synthesized methylene blue and the S^{35} tagged methylene blue were both made by the same process and it is not obvious why there should be a difference in the particles produced from the two aerosols.

Based on the foregoing observations it appears that the purity of the aerosol solution may be critical if a reproducible solid homogeneous aerosol is to be generated by this method.

CONCLUSIONS

Of the several methods investigated for the production of solid homogeneous aerosols the high speed air top appears to be the most promising. Based on the limited amount of work done in this investigation it appears that this instrument used in conjunction with a suitable drying chamber could be developed into a solid homogeneous aerosol generator for use in routine

testing. By the judicious selection of the feed solution and the control of the impurities therein, particles of various shapes could be produced with the possibility of using the particles thus produced to investigate the influence of shape on penetration.