[redacted]

MARTIN MARIETTA ENERGY SYSTEMS LIBRARIES
3 4456 0360700 5

CENTRAL RESEARCH LIBRARY
DOCUMENT COLLECTION

ORNL 1722

Radiation Effects on
Reactor Materials

LABORATORY RECORDS
1964

EFFECT OF FISSIONABLE PARTICLE SIZE ON FISSION DAMAGE IN GRAPHITE

R. H. Kernohan

CENTRAL RESEARCH LIBRARY
DOCUMENT COLLECTION

LIBRARY LOAN COPY

DO NOT TRANSFER TO ANOTHER PERSON

If you wish someone else to see this document, send in name with document and the library will arrange a loan.

OAK RIDGE NATIONAL LABORATORY
OPERATED BY
CARBIDE AND CARBON CHEMICALS COMPANY
A DIVISION OF UNION CARBIDE AND CARBON CORPORATION

UCC

POST OFFICE BOX P
OAK RIDGE, TENNESSEE

[redacted]

[redacted]

ORNL-1722 (Del)
This document consists of
44 pages. Copy 4
of 198. Series A.

EFFECT OF FISSIONABLE PARTICLE SIZE ON FISSION DAMAGE IN GRAPHITE

By R. H. Kernohan

April 21, 1954

DECLASSIFIED
With/D
11-30-56

Per Letter Instructions Of
AEC 7-2-56
M. Shirley
For: H. T. Bray, Supervisor
Laboratory Records Dept.
ORNL

Date Issued: JUL 2 1954

[redacted]

OAK RIDGE NATIONAL LABORATORY
Operated by
CARBIDE AND CARBON CHEMICALS COMPANY
A Division of Union Carbide and Carbon Corporation
Post Office Box P
Oak Ridge, Tennessee

[redacted]

MARTIN MARIETTA ENERGY SYSTEMS LIBRARIES
3 4456 0360700 5

CONTENTS

	Page
Abstract	1
Acknowledgements	1
Introduction	2
Description of Specimens	4
Measurements	5
Details of the Irradiations	12
Results of Post-Irradiation Measurements	14
Results of a Short-Period Irradiation	20
Annealing Studies	20
Discussion of Results	27
Conclusions	38

[redacted]

LIST OF FIGURES

		Page
Fig. 1	Thermal Conductivity Apparatus	10
Fig. 2	Exploded View of Specimen Container with Specimens in Place	13
Fig. 3	Specimen Container Assembled	13
Fig. 4	Results of Step-Annealing Process	23
Fig. 5	Residual Resistivity Data	24
Fig. 6	Graph of Reciprocal Particle Size vs. Resistivity	30

LIST OF TABLES

Table 1	Designation of Specimens	5
Table 2	Specimen Dimensions	7
Table 3	Irradiation Data	15
Table 4	Results of Irradiation Measurements	16
Table 5	Summary of Percentage Changes in Irradiated Graphite-UO_2 Bars	17
Table 6	Results of Short-time Irradiation of Graphite-UO_2 Specimens	21
Table 7	Resistivities of Annealed Graphite-UO_2 Specimens	26
Table 8	Results of Annealing of Graphite-UO_2 Specimens	28
Table 9	Average Adjusted Resistivities	29
Table 10	Comparisons of Experimental Results and Theory	34

[redacted]

ABSTRACT:

Molded graphite test specimens containing 5% by weight of enriched uranium oxide particles were irradiated for one month in the ORNL Graphite Reactor along with control specimens containing no uranium oxide. Specimens in the form of rectangular bars three inches long were measured both before and after irradiation in order to find possible changes in weight, modulus of elasticity, electrical resistivity and thermal conductivity. The purpose of these tests was to investigate the degree of fission-fragment damage as a function of UO_2 particle size in the graphite matrix. Results show that decreases in weight and thermal conductivity and increases in electrical resistivity and the modulus of elasticity of the same order of magnitude occurred in all specimens but were particularly severe for specimens in which the UO_2 particle size was less than 44 microns. Annealing studies up to 750°C indicated that annealing of fission damage did not occur. The amount of fission damage was compared with results of theoretical calculations and found to be in fair agreement.

ACKNOWLEDGEMENTS

The author is indebted to L. D. Loch, R. J. Harrison, and G. B. Treff of Battelle Memorial Institute for the preparation of specimens and help in the testing program. J. B. Trice of ORNL also helped with the neutron flux measurements.

INTRODUCTION:

Previous work on the effect of fission fragments in uranium-bearing materials by L. P. Hunter[1] indicated the desirability of studying the effect of uranium particle size on fission-fragment damage. Hunter's work was done on graphite and BeO bodies impregnated with uranyl nitrate which was dried and fired to U_3O_8, as well as on hot pressed and molded mixtures.

Studies of the structure of Hunter's samples indicate that the U_3O_8 was present in sizes of from 2 to 5 microns in the impregnated samples and as large as 50 microns in the molded graphite samples. Generally speaking, however, the impregnation technique resulted in a more or less homogeneous dispersion of fissionable atoms throughout the matrix material. Hunter measured the thermal conductivity of his uranium-bearing samples during irradiation by using the inherent fission heat and by measuring radial temperature distributions.

It is reasonable to expect that if the fissionable material is dispersed throughout a material in the form of discrete particles which are small, but yet large enough to absorb a considerable fraction of the fragments originating within them, then fission-fragment damage to the bulk material can be held to a minimum by comparison with relatively homogeneous dispersions. On the other hand, if the fissionable particles are made extremely large in order to absorb nearly all the fission fragments, the result would be a relatively heterogeneous dispersion with concomitant problems of anomalies in fission-heat transfer. In particular, the problem of fuel particle size

---

(1) L. P. Hunter, Thermal Conductivity of Uranium-bearing Material Under Irradiation at High Temperatures, J. of Metallurgy and Ceramics, TID-66, Issue No. 2, p. 41-53, (1949).

and its relationship to the behavior of a homogeneous graphite reactor has been investigated[2]. If fuel particle sizes are made too large so as to reduce damage in the matrix material to a minimum, it is possible that there could be a deleterious effect on the negative temperature coefficient of reactivity inherent in a homogeneous graphite reactor.

The present work was done as a preliminary experiment in order to investigate the effect of fission-particle size on fission-fragment damage in any material. Graphite was chosen as the matrix material because of convenience of fabrication and because of the many previous studies made on radiation damage to this material. The range of fission fragments in graphite is 12 microns for heavy fragments and 17 microns for light fragments, which is somewhat greater than the range in uranium or uranium oxide. However, graphite does have the disadvantage that its properties may vary not only as a function of purity, density, heat treatment, particle size, method of fabrication, etc., but also from sample to sample.

This work was a joint effort of Battelle Memorial Institute and Oak Ridge National Laboratory. The Battelle group was responsible for forming and sizing the UO_2 particles and fabricating the test bars. This work is described in BMI-TP-26. The ORNL Solid State Division was responsible for the mechanics of irradiation and the pre-irradiation and post-irradiation tests described in this report. Theoretical considerations of this problem were also carried out at Battelle by R. J. Harrison[3].

---

(2) D. L. Hetrick, The Effect of Fuel Particle Size on the Transient Behavior of a Homogeneous Graphite Reactor, NAA-SR-210.

(3) R. J. Harrison, Effect of Particle Size on Fission Fragment Damage for Particles of Fissionable Material Dispersed in a Matrix, BMI-846.

DESCRIPTION OF SPECIMENS:

The size, shape, and number of specimens to be tested, irradiated and tested after irradiation was contingent upon fabrication techniques, the radiation facilities available, conservation of uranium, and the nature of available remote-control testing apparatus. It was desirable to test as many physical properties as possible on each specimen both before and after irradiation. In view of these factors, a compromise on size and shape was made which resulted in a test specimen in the form of a rectangular graphite bar approximately 1/4" x 5/16" x 3".

The Battelle group expended considerable effort in the technique of making sized particles of UO_2 to be incorporated in the graphite bars[4]. All test specimens were molded, resin-bonded bodies made up with the same weight of UO_2 particles. Composition was 5% of uranium metal (added as UO_2) by weight and 95% of carbon. The UO_2 occupied about 3% by volume. The specimens were baked at 2500°F (1370°C) and were not graphitized.

Four batches of bars, each of different particle size, were made containing UO_2 with about 90% U^{235} enrichment. Another four batches were made containing UO_2 with normal uranium (.7%). One batch of control test bars containing no uranium addition was also fabricated. Batch designations and descriptions are explained in Table 1.

The Battelle group had made dimensional measurements on each of the test bars. These were not repeated at ORNL. Twenty-four specimens were chosen to be irradiated in the ORNL Graphite Reactor in groups of eight. These specimens

---

(4) L. D. Loch, H. Z. Schofield, and J. A. Slyh, Fabrication of Urania-bearing Graphite, BMI-TP-26.

TABLE 1
DESIGNATION OF SPECIMENS

Batch Letter	Description of Uranium Addition
R	No uranium.
S	Enriched U. Nodules, -35 + 40 mesh U S Std. Average particle size, 586 + 16 microns (microscopically determined).
T	Enriched U. Nodules, -50 + 70 mesh. Average particle size, 334 ± 7 microns (microscopically determined).
U	Enriched U. Nodules, -140 + 325 mesh. Average particle size, 94 ± 0.2 microns (microscopically determined).
V	Enriched U. Nodules, -325 mesh. Particle size less than 44 microns (estimated).
X	Normal U. Nodules -35 + 40 mesh. (Same as batch S)
2X	Normal U. Nodules -50 + 70 mesh. (Same as T)
3X	Normal U. Nodules -140 + 325 mesh. (Same as U)
4X	Normal U. Nodules -325 mesh. (Same as V)
Z	AGOT graphite, cut parallel to extrusion direction.
2Z	AGOT graphite, cut perpendicular to extrusion direction.

were chosen as far as possible for uniformity in dimensions, density and rectilinearity. Unfortunately, some of the test bars were slightly bowed, particularly the bars containing the larger UO_2 particles. The designations and dimensions of the bars chosen for irradiation are given in Table 2. Densities were calculated from the weights and dimensions. The specimens of particular interest, S, T, U and V contained about 80 to 85 mg of fissionable material per cc.

MEASUREMENTS:

The measurements taken on each bar were weight, modulus of elasticity, relative thermal conductivity and electrical resistivity. These measurements were taken in the above order before irradiation. After irradiation, electrical resistivity was measured before the thermal conductivity. All measurements both before and after irradiation were performed on remote-control apparatus located in hot cells of the ORNL Solid State Division.

(a) Weight

Specimens were weighed in many cases several times both before and after irradiation. The Meitler balance used for weighing could reproduce weights well within one milligram. Variation in adsorbed moisture[5] in samples may have been responsible for variations wider than this, possibly up to 5 milligrams. Specimen 4X-5 in particular gave a wide range (25 mg) both before and after irradiation. All specimens were weighed at least three times on separate occasions several months apart after irradiation. Once between weighings the tray containing specimens from Group A was inadvert-

---

(5) F. W. Fenning, Adsorption of Moisture by Graphite, POC/Mem-10, June 30, 1948.

TABLE 2

SPECIMEN DIMENSIONS

Specimen	Weight (g)	Depth (in.)	Width (in.)	Length (in.)	Calculated Density (g/cc)
		Group A			
2Z-1	4.8897	0.250	0.250	3.018	1.582
R-1	5.6542	0.237	0.302	2.916	1.653
S-5	5.5977	0.230	0.296	2.855	1.758
T-6	5.6067	0.230	0.296	2.856	1.760
U-7	5.5934	0.229	0.296	2.857	1.763
V-3	5.5530	0.231	0.296	2.859	1.733
X-10	5.3684	0.230	0.299	2.871	1.659
4X-5	5.4435	0.228	0.297	2.869	1.710
		Group B			
R-2	5.6605	0.237	0.302	2.913	1.657
S-12	5.6353	0.230	0.297	2.864	1.758
T-17	5.6442	0.231	0.296	2.861	1.761
U-4	5.6500	0.231	0.296	2.866	1.759
V-7	5.4539	0.228	0.297	2.860	1.719
X-4	5.4790	0.227	0.297	2.872	1.727
2X-8	5.3998	0.226	0.296	2.864	1.718
3X-3	5.4340	0.229	0.297	2.868	1.700
		Group C			
R-6	5.7851	0.242	0.302	2.911	1.659
S-9	5.6499	0.232	0.296	2.859	1.756
T-2	5.6399	0.232	0.296	2.861	1.752
U-11	5.6101	0.232	0.296	2.859	1.744
V-8	5.4560	0.227	0.296	2.861	1.732
2X-4	5.4461	0.228	0.296	2.866	1.718
3X-6	5.4091	0.228	0.296	2.864	1.708
4X-4	5.4218	0.228	0.296	2.867	1.710

ently dropped and three of the specimens from this group seemed to lose considerable weight, possibly from loss of a tiny chip or other abrasion. If the maximum difference in weight on each specimen as obtained from the three separate post-irradiation weighings is averaged over all 24 specimens the result is an average range of accuracy of 5 mg; if the three possibly chipped specimens of group A are excluded, the average range is 2.8 mg.

(b) Modulus of Elasticity

The modulus of elasticity was found by vibrating each specimen transversely by the "free-free" method and by determining the natural resonant frequency. Each specimen was suspended horizontally by means of two cotton-thread support loops located about one-half inch from the ends of the bar. One loop was attached to the coil of a small loudspeaker which was driven by an audio interpolation oscillator. The other loop was attached to the needle of a crystal pick-up whose output went through an amplifier to the vertical plate of an oscilloscope.

Resonance peaks were not always easily determined and were often quite broad, particularly before irradiation. The greatest range of frequency permitted calculations of the modulus of elasticity within a range of ± 1%.

The formula used for calculating the modulus of elasticity was:

$$E = 0.541 \times 10^{-5} \frac{l^3}{bh^3} \cdot W \cdot f^2$$

l, b, h = length, width and depth in inches

W = weight in grams

f = resonant frequency in cycles per second.

(c) Electrical Resistivity

A standard potentiometer (Rubicon, type C) setup was used to measure electrical resistivity. The current through the specimen and standard

resistor was about 0.65 amperes. The potential drop was measured across two knife edges placed 1.508 inches apart around the middle of the specimen. Two readings were taken and averaged for each value. Between the first and second readings the sample was turned end for end in order to account for the bowing or curvature of some of the specimens. Individual readings had a standard deviation of ± 3.3 microhm-cm (± .2%). If curvature is taken into account, this value might be considered to be ± .35%. The greatest range of error ever encountered was slightly over 1%. In general, weight and electrical resistivity were the most accurately measured properties in these experiments.

Resistivity values were corrected to 20°C. A separate experiment was performed on two unirradiated specimens, one from batch R and one from batch V, in order to determine the temperature coefficient of resistance in the neighborhood of room temperature. The value obtained for both specimens was -0.001/°C which agrees well with values found in the literature.

(d) Relative Thermal Conductivity

No attempt was made to measure the absolute thermal conductivity of these specimens, because of the difficulties involved in the manipulation of radioactive samples. An apparatus was designed to give an indication of changes in thermal conductivity upon irradiation. This apparatus could certainly not be considered more accurate than ± 5%.

A schematic diagram of the apparatus used is shown in Fig. 1. The specimen S, was inserted through two rectangular holes in micarta into a bath of molten metal P. The metal was a low melting point (~100°C) alloy which did not wet the graphite. The bottom of the specimen rested against a rigidly positioned thermocouple A. Thermocouple B was used to control the

UNCLASSIFIED
SSD-A-966
ORNL-LR-DWG 979

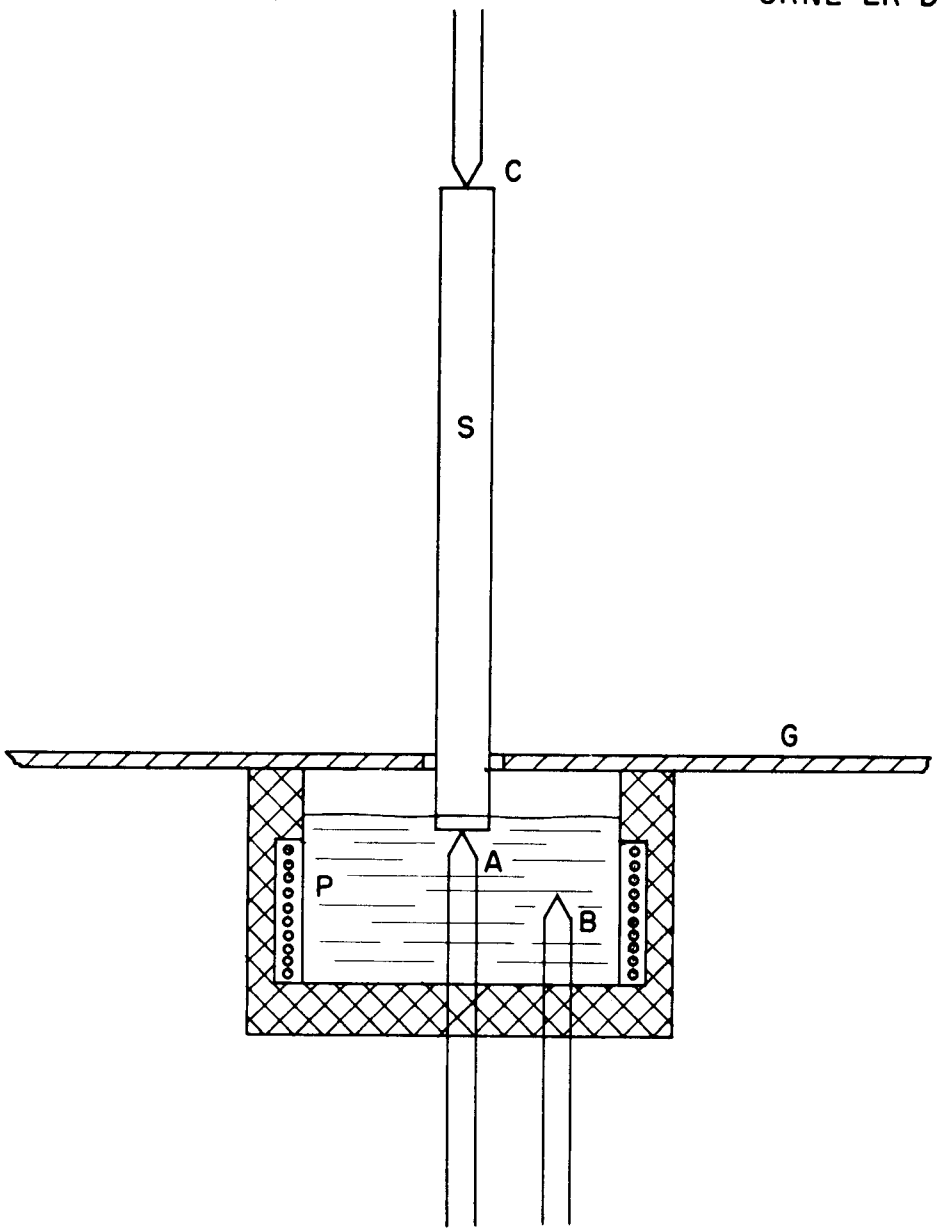

Fig. 1. SCHEMATIC DIAGRAM OF RELATIVE THERMAL CONDUCTIVITY APPARATUS

temperature of the molten metal. Thermocouple C was soldered to a 1/4" diameter piece of 10 mil copper sheet and situated so that it could move vertically and be brought in contact with the top of specimen S with a slight pressure from a spring. A small piece of indium foil was inserted between the copper button and the top of the specimen to assure good contact. Insulating cement covered the exposed part of the copper and thermocouple C.

The molten bath was maintained at about 160°C. Specimens were placed in the apparatus and about 10 minutes was allowed for the specimens to come to equilibrium. A series of alternate readings of couples A and C were taken during the next ten minutes. The difference in temperature between couples A and C may be taken as a measure of thermal conductivity, i.e., the smaller the difference the greater the conductivity.

Corrections on the temperature differences from the data were made on two factors, (1) surrounding air temperature differences in the before and after experiments and (2) differences in length for the Z and R specimens. The air in the hot cells was essentially still air and a mercury thermometer placed about 8" horizontally from the specimen being measured gave an indication of the surrounding air temperature. Nearly all the specimens were of the same length except the Z and R specimens. The temperature of the top couple C was normalized for these specimens to correspond to a length of 2.860 inches assuming a linear distribution of temperature along the test bar. This assumption is not quite correct[6], but it is no worse than other assumptions implied in these measurements concerning losses of heat to the air from convection and radiation.

---

(6) M. Jakob, Heat Transfer, J. Wiley, New York, 1949.

DETAILS OF THE IRRADIATIONS:

A specimen container suitable for holding eight test bars was designed and three containers were built in the ORNL Research Shop. One of the containers is shown in exploded view in Fig. 2. The assembled container is shown in Fig. 3.

The main body of the container was a cold-rolled steel tube $1\frac{1}{4}$" O D and 1" I D. An aluminum spacer divided the inside of the tube in four quadrants and fitted snugly in the tube. A spring cap at one end of the container helped to hold the specimens in place as did the aluminum spacer. A small pocket was made in the aluminum cap at one end of the container for holding a small piece of cobalt foil for neutron flux measurements.

Three thermocouples were incorporated in each container. One was in the center of the aluminum spacer, one was next to the steel wall, and a third was placed so as to contact the end of a specimen. Duplex iron-constantan thermocouple wires passed through Kovar seals in a sealing cap and thence from the container to the pile face.

Each container was assembled with specimens inside as shown in Fig. 2, and was soft soldered around the joints. The container was then pumped down with a mechanical vacuum pump through a copper tube in the sealing cap. After the container was determined to be vacuum tight, it was filled with dry helium gas and was again evacuated. After several flushes the container was finally filled with helium to a pressure of about 3 psi and the copper tube was crimped in several places to seal the container. The purpose of the helium gas as well as the aluminum spacer was to provide efficient cooling, for it was desired that the specimens should be maintained at as low a temperature as possible during irradiation. The lowest temperature recorded during irradiation was 30°C and the highest was 88°C.

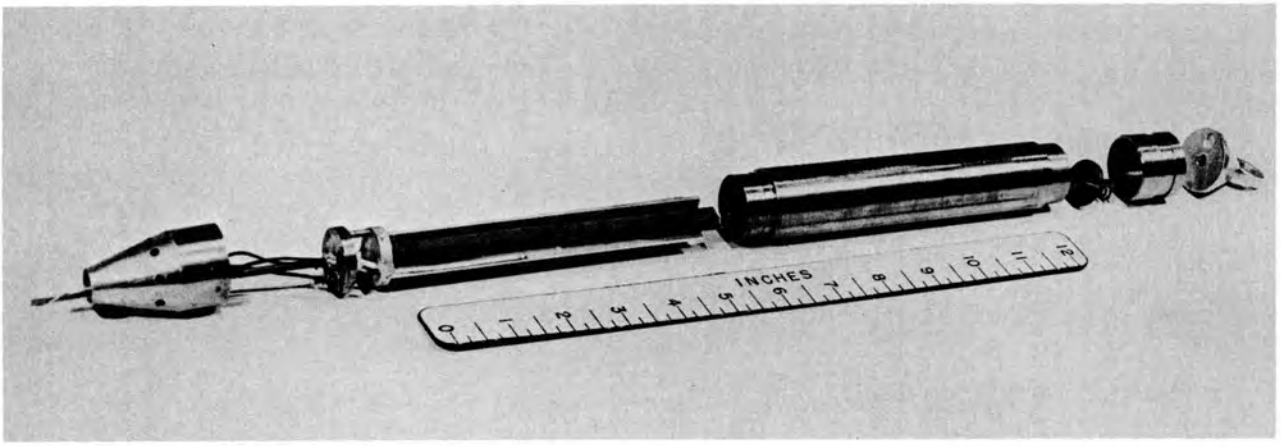

Fig. 2. EXPLODED VIEW OF SPECIMEN CONTAINER WITH SPECIMES IN PLACE

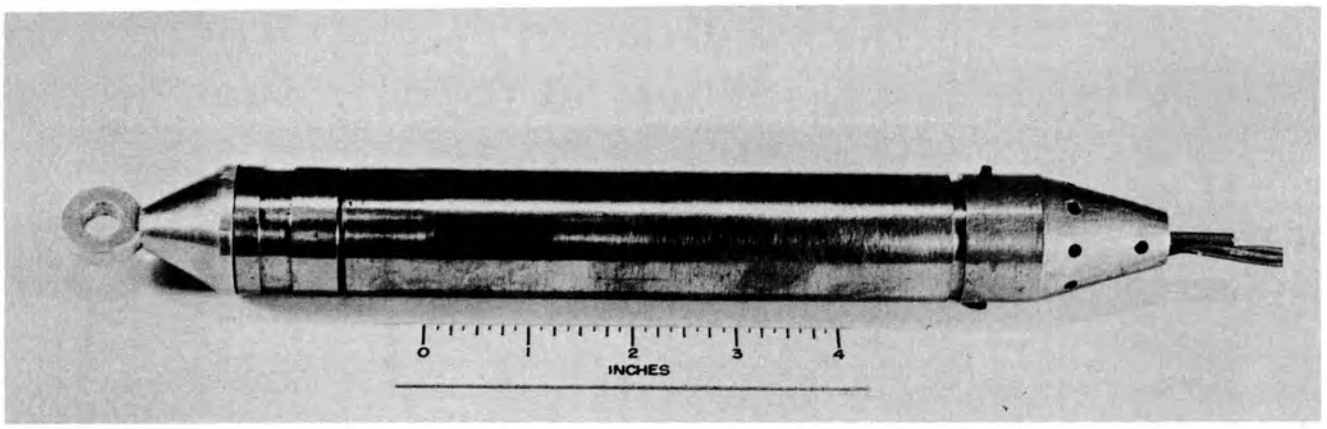

Fig. 3. SPECIMEN CONTAINER ASSEMBLED

The containers were designated, A, B, C and were irradiated in successive months in the center of Hole B in the ORNL Graphite Reactor. Irradiation data obtained from activity measurements on cobalt foil, from readings of the container thermocouples and from the pile operations department are summarized in Table 3.

From the average value of integrated flux and the fission cross-section, the burn-up for the enriched specimens (S, T, U, V) was calculated to be 0.1%. Furthermore, if it is assumed that all of the fission energy (195 Mev per fission) is eventually converted into heat in these specimens, the heat developed in each specimen will be 2.4 cal/sec or 10 watts. Since the irradiation lasted about 600 hours, the energy dissipated by each of the enriched specimens was 6 kilowatt-hours or about 1.8 kwh/cc.

RESULTS OF POST-IRRADIATION MEASUREMENTS:

The results of actual measurements are summarized in Table 4. Percentage changes calculated by dividing differences by original values are given in Table 5. Values for each specimen are given in order to indicate the degree of variation in similar specimens even in pre-irradiation values. The specimens containing normal UO_2 appeared to be inferior to the other specimens from the point of view of density (Table 2) and the consistency of measurements on them. They will not be considered further in this report.

Changes in elastic modulus, electrical resistivity and thermal resistivity exhibit considerable spread even within a given group of specimens. As was expected, the V batch of specimens (containing fissionable particles of the smallest size) showed the greatest changes, three to four times the increases in other specimens. Likewise the spread of post-irradiation values and changes within the V group was the greatest and there was no apparent corre-

TABLE 3

IRRADIATION DATA

Container	Flux (nv)	Pile-on Time (Hr)
A	9.3×10^{11}	567.8
B	8.6×10^{11}	582.6
C	8.3×10^{11}	613.8

	Integrated Flux (nvt)	Increment of Pile Power (kwh)	Highest Temp. Attained (°C)
A	1.90×10^{18}	2,176,534	86
B	1.80×10^{18}	2,199,567	66
C	1.83×10^{18}	2,248,238	88

TABLE 4
RESULTS OF IRRADIATION MEASUREMENTS

Specimen	Container	Specimen Description	Weights Before Irrad. (g)	Weights After Irrad. (g)	Weights Difference (mg)	Modulus of Elasticity ($\times 10^6$ psi) Before Irrad.	Modulus of Elasticity ($\times 10^6$ psi) After Irrad.	Resistivity Corrected to 20°C (microhm-cm) Before Irrad.	Resistivity Corrected to 20°C (microhm-cm) After Irrad.	Temperature Differences (°C) Before Irrad.	Temperature Differences (°C) After Irrad.
2Z-1	A	AGOT	4.8897	4.8883	-1.4	0.89	1.28	1127	1566	40.2	49.1
R-1	A		5.6542	5.6555	+1.3	2.96	3.98	1409	1702	61.1	68.2
R-2	B	No U	5.6605	5.6604	-0.1	2.90	4.00	1432	1892	64.5	71.9
R-6	C		5.7851	5.7817	-3.4	2.90	3.96	1444	1874	66.7	72.1
S-5	A		5.5977	5.5700	-27.7	2.90	3.77	1401	1586	68.1	78.1
S-12	B	586	5.6353	5.6127	-22.6	2.87	3.99	1437	1843	71.8	76.4
S-9	C	Enriched U	5.6499	5.6339	-16.0	2.85	3.95	1421	1733	69.2	72.0
T-6	A		5.6067	5.5750	-31.7	2.85	3.69	1399	1713	62.0	77.4
T-17	B	334	5.6442	5.6138	-30.4	2.87	3.86	1419	1757	69.5	72.7
T-2	C	Enriched U	5.6399	5.6210	-18.9	2.87	3.84	1430	1675	64.3	70.4
U-7	A		5.5934	5.5210	-72.4	2.92	3.66	1404	1819	66.0	75.5
U-4	B	94	5.6500	5.5810	-69.0	2.90	3.75	1459	1909	70.6	80.4
U-11	C	Enriched U	5.6101	5.5764	-33.7	2.93	3.91	1430	1774	67.0	74.0
V-3	A		5.5530	5.3566	-196.4	2.82	3.38	1503	2998	67.8	109.8
V-7	B	44	5.4539	5.2979	-156.0	2.75	3.56	1509	2771	75.8	104.6
V-8	C	Enriched U	5.4560	5.4165	-39.5	2.80	4.34	1510	2502	68.8	101.7
X-10	A	586	5.3684	5.3710	+2.6	2.39	3.08	1612	1893	69.0	76.2
X-4	B	Normal U	5.4790	5.4775	-1.5	2.70	3.72	1525	1978	76.2	81.3
2X-8	B	334	5.3998	5.3995	-0.3	2.60	3.63	1534	2024	73.4	78.3
2X-4	C	Normal U	5.4461	5.4384	-7.7	2.55	3.48	1556	1994	72.9	79.7
3X-3	B	94	5.4340	5.4300	-4.0	2.39	3.39	1612	2153	73.0	83.7
3X-6	C	Normal U	5.4091	5.4034	-5.7	2.47	3.43	1571	2049	69.4	77.8
4X-5	A	44	5.4435	5.4465	+3.0	2.44	3.41	1666	2158	72.7	79.3
4X-4	C	Normal U	5.4218	5.4123	-9.5	2.45	3.57	1637	2264	75.2	82.6

TABLE 5

SUMMARY OF PERCENTAGE CHANGES IN IRRADIATED GRAPHITE-UO_2 BARS

Specimen	Specimen Description	Weight Change (%)	Elastic Modulus Increase (%)	Electrical Resistivity Increase (%)	Relative Thermal Resistivity Increase (%)
2Z-1	AGOT	-0.03	44	38.9	22
R-1	No U	+0.02	35	20.8	12
R-2		0	38	32.1	12
R-6		-0.06	37	29.8	8
Avg. R		-0.01	37	27.5	11
S-5	586 Enriched U	-0.50	27	13.2	15
S-12		-0.40	39	28.3	7
S-9		-0.29	39	22.0	4
Avg. S		-0.40	35	21.2	9
T-6	334 Enriched U	-0.57	30	22.4	25
T-17		-0.54	35	23.8	5
T-2		-0.34	33	17.1	10
Avg. T		-0.48	33	21.1	13
U-7	94 Enriched U	-1.30	25	29.5	14
U-4		-1.22	29	30.8	14
U-11		-0.60	35	24.0	10
Avg. U		-1.04	30	28.1	13
V-3	44 Enriched U	-3.54	20	99.5	62
V-7		-2.86	29	83.6	38
V-8		-0.73	55	65.7	49
Avg. V		-2.38	35	83.0	50

TABLE 5 (cont.)

SUMMARY OF PERCENTAGE CHANGES IN IRRADIATED GRAPHITE-UO_2 BARS

Specimen	Specimen Description	Weight Change (%)	Elastic Modulus Increase (%)	Electrical Resistivity Increase (%)	Relative Thermal Resistivity Increase (%)
X-10	586	+0.05	29	17.4	10
X-4	Normal U	-0.03	38	29.7	7
Avg. X		+0.01	34	23.6	9
2X-8	334	-0.01	40	31.9	7
2X-4	Normal U	-0.14	36	28.1	9
Avg. 2X		-0.07	38	30.0	8
3X-3	94	-0.07	42	33.6	15
3X-6	Normal U	-0.11	39	30.4	12
Avg. 3X		-0.09	41	32.0	14
4X-5	44	+0.06	40	29.5	9
4X-4	Normal U	-0.18	46	38.3	10
Avg. 4X		-0.06	43	33.9	10

lation between the various physical property changes. This might perhaps be expected, since the size of particle in the V batch could vary over a considerable range, i.e., from 0 to 44 microns. The particle-size range limits on batches S, T, and U were much narrower.

Perhaps the most unusual result obtained was the comparatively large loss of weight during irradiation experienced only by the specimens containing enriched UO_2. The balance and weights were checked repeatedly for errors but none were found. Visual inspection of the specimens through hot cell windows gave no clue as to changes in appearance. From an inspection of Tables 4 and 5 it is obvious that there is a progressively larger loss in weight as the UO_2 particle is made smaller, i.e., the loss is larger in the V specimens. The amount of loss also seemed somewhat dependent on the container used for irradiations. The enriched UO_2 specimens in containers A and B lost much more weight than those in container C.

Possible explanations of the excessive weight losses are (1) burn-up of the uranium by fission, (2) chemical changes in the UO_2 particles caused by fission heat, (3) sublimation of graphite from the specimen surface, (4) chemical changes in the binder material, (5) changes in the adsorptive qualities of graphite and (6) abrasion during irradiation. Calculations on burn-up and reduction of UO_2 would eliminate the first two possible explanations. Thus far, no satisfactory solution to the weight-loss phenomenon has been found.

Repetitions of the post-irradiation measurement of electric resistivity and thermal resistivity brought forth still another fact. It became evident that there was a very slight decrease in electrical resistivity measurements made after the thermal resistivity measurements. One probable explanation was that during the thermal measurement at somewhere between 100 and 160°C some annealing of the irradiation damage was occurring. Annealing studies were subsequently carried out and are described later in this report.

RESULTS OF A SHORT-PERIOD IRRADIATION:

In order to inquire briefly about the rate of fission damage, three specimens were irradiated for a short time (7.5 hr) in hole 19 of the ORNL Graphite Reactor. From cobalt-foil measurements, the integrated neutron flux was found to be 2.1×10^{16} nvt or about 1% of the neutron bombardment given to the other irradiated specimens. The pre- and post-irradiation results are given in Table 6. Comparison with previous results would indicate that fission-fragment damage to the graphite builds up much more rapidly than neutron damage and probably reaches an equilibrium value. Further tests for varying lengths of time would be necessary to establish these conclusions firmly.

ANNEALING STUDIES:

As mentioned above, a repetition of electrical resistivity measurements following thermal resistivity measurements had given a slight indication of annealing. This was particularly true for the R group of specimens containing no UO_2, although these specimens were not heated to more than 160°C for more than 30 minutes.

In order to make a more thorough study of any annealing effects, a commercial tube furnace was reconstructed in order that it might be operated by remote control in the hot cells. A device was made to hold the specimen and to apply electrical contacts. This device was fastened to a sliding mechanism for easy insertion into the central heat zone of the furnace. The furnace could then be closed tightly and a stream of dry nitrogen directed around the specimen. After an annealing treatment the specimen holder could be pulled out by remote operation and the specimen could be cooled by a blower.

Because the electrical resistivity measurements were the most accurate and most easily made, they were used as a measure of the amount of annealing.

TABLE 6
RESULTS OF SHORT-TIME IRRADIATION
OF GRAPHITE-UO_2 SPECIMENS

Measurement	Specimen		
	R-16	U-9	V-6
Specimen Description	No UO_2	94 micron Enriched UO_2	44 micron Enriched UO_2
Weight before irradiation (g)	5.8214	5.6743	5.4953
Weight after irradiation (g)	5.8215	5.6622	5.4834
Weight change (mg)	+ 0.1	- 12.1	- 11.9
Weight change (%)	0	- 0.21	- 0.22
Modulus of elasticity			
Before irradiation (10^6psi)	3.11	2.98	2.93
After irradiation (10^6psi)	3.11	3.13	3.64
Change (%)	0	+ 5	+ 24
Electrical resistivity			
Before irradiation (microhm-cm)	1434	1445	1495
After irradiation (microhm-cm)	1441	1514	1829
Change (%)	+ 0.5	+ 4.8	+ 22.4

For the first part of the annealing study a process of step annealing was used. Each specimen was heated for 1 hr at each temperature beginning with 150°C and going up by 25°C steps. After each hour (or every 2 hr after 225°C), the specimen was withdrawn from the furnace, cooled to less than 30°C by the blower and resistivity measurements were taken. Measurements could also be taken while the specimens were at annealing temperature, but post-anneal resistivities on the cooled specimens, all corrected to 20°C, were considered more significant for comparison purposes.

Representative irradiated specimens from each particle size group except the T group were chosen for the step-anneal study. The results are shown in Fig. 4. The ordinate of the graph in Fig. 4 is the resistivity adjusted so that the pre-irradiation or initial resistivity of each specimen may be considered as having the arbitrary value of 1000. Thus all values on the graph are found by multiplying the measured resistivity corrected to 20°C by the factor 1000/pre-irradiation resistivity. The values on the first vertical dotted line on the left side of the graph represent post-irradiation values. The values on the second dotted line are those taken 8 months later after thermal resistivity measurement in a different resistivity measuring device, i.e., the one for insertion in the furnace. These factors may account for the slightly different values, however it is clear that the R specimen containing no UO_2 anneals more rapidly than those containing UO_2. Step annealing was not carried beyond 425°C since there was some indication that the curves in Fig. 4 were leveling off.

Another way of looking at the annealing process is shown in Fig. 5 in which the residual resistivity in per cent is plotted against the annealing temperature. Let ρ represent the resistivity before irradiation, ρ' that after irradiation and ρ_1 that after a stage of step annealing.

[redacted]
SSD-A-715
DWG. 18584

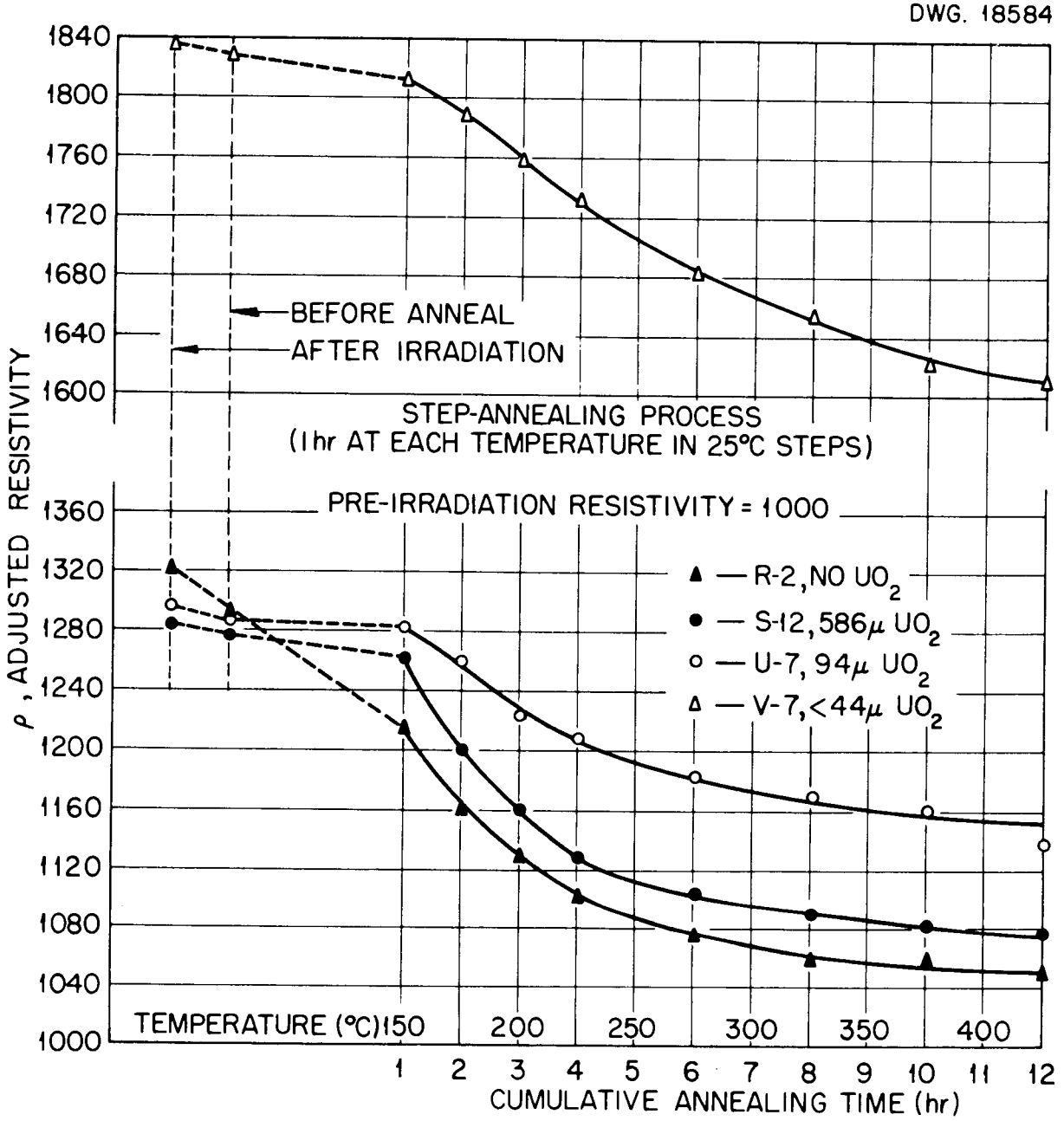

Fig. 4. ADJUSTED ELECTRICAL RESISTIVITY OF GRAPHITE-UO_2 BARS AT 20°C

[redacted]
DWG. 18583

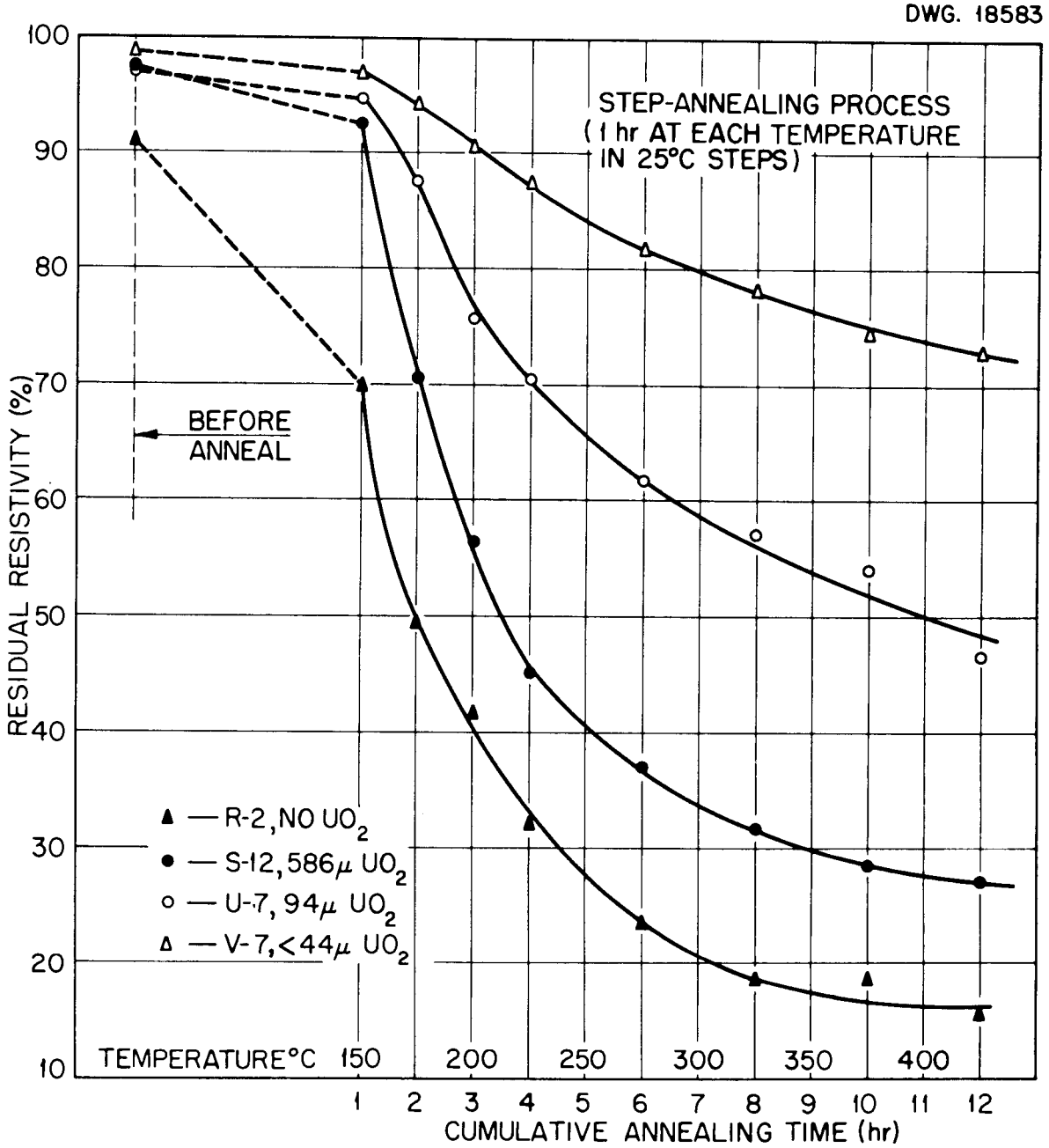

Fig. 5. RESIDUAL RESISTIVITY DAMAGE OF GRAPHITE-UO_2 BARS

$$\text{Per cent residual resistivity} = \frac{\rho_1 - \rho}{\rho' - \rho} \times 100$$

Thus the ordinate values are the per cent of damage remaining in the specimen with 100% representing the post-irradiation resistivity and 0% the pre-irradiation resistivity.

In order to discover whether the annealing process was time dependent in any way, the specimens which had previously gone through the step-annealing process were annealed for a longer period (18 hr) at the highest step-anneal temperature, 425°C. Measurements were again taken and the specimens were annealed again for 12 hr at 750°C. The results are summarized in Table 7; some discrepancies appear in the table. Measurements for Nos. 4 and 5 were taken in the resistivity device which fitted into the furnace. These measurements were generally lower and not as accurate as the others done in the standard remote equipment. For example, except for the time difference, the measurements for Nos. 3 and 4 should be the same as should those for Nos. 5 and 6.

Generally speaking, the long anneal at 425°C had little further effect on the resistivity. The anneal at 750°C lowered the resistivity slightly except in the case of specimen V-7 where the decrease was 2.5%.

After the 18-hr anneal at 425°C the specimens were weighed. There was a general loss of weight of about 10 mg during the annealing for all specimens except V-7 which lost about 35 milligrams. Some of the loss may have been caused by the excessive and somewhat rough handling necessary in remote manipulation in the hot cells.

The other remaining irradiated specimens which had not been annealed previously were then heated at 425°C for 18 hours. Their resistivities were

TABLE 7

RESISTIVITIES OF ANNEALED GRAPHITE-UO_2 SPECIMENS

Specimen	UO_2 Particle Size (Microns)	Resistivity (microhm-cm)							
		1 Before Irrad.	2 After Irrad.	3 After Thermal Resistivity Measurements	4 8 mos. later Before Anneal	5 After Step-Anneal 12 hr from 150 to 425°C	6 Before 18-hr Anneal	7 After 18 hr at 425°C	8 After 12 hr at 750°C
R-2	None	1432	1892	1856	1852	1502	1508	1519	1505
S-12	586	1437	1843	1840	1834	1547	1548	1555	1543
T-6	334	1399	1712	-	1709	Not step-annealed	1712	1511	1500
U-7	94	1404	1819	1819	1806	1598	1624	1628	1624
V-7	44	1509	2771	2773	2755	2429	2467	2468	2407

measured in the standard remote apparatus. The results are shown in the first three columns of figures in Table 8. For comparison studies it seemed advisable to adjust all resistivity values as was done for Fig. 4 so that the pre-irradiation value would be 1000. The adjusted resistivity values were calculated and are tabulated in the last two columns of Table 8. Average adjusted resistivity values are given in Table 9 and are shown graphically in Fig. 6 in which these values are plotted against the reciprocal of particle radius.

DISCUSSION OF RESULTS:

It is clear that the R specimens are subject only to neutron damage while the S, T, U and V specimens are subject to both neutron and fission-fragment damage. An observation of the upper curve for irradiated specimens in Fig. 6 might lead to the conclusion that there is less total damage to specimens containing large UO_2 particles than to specimens (R) which undergo only neutron damage. Or the possibility exists that fission damage is of such a different nature than neutron damage that a small amount of it can inhibit a portion of the neutron damage. However, it is not safe to draw any such conclusions because of the limited number of specimens used and the variation in values among specimens of the same type.

A difficulty arises in the exact location of the average resistivity value for the V specimen in the upper right section of the graph in Fig. 6. The particle sizes of the UO_2 were microscopically determined, except in the case of the V-type specimens whose particles were passed through a U. S. Standard 325-mesh sieve. The particle size for the V specimens could therefore vary from 0 to 44 microns and the question arises concerning the correct size to choose for the average diameter for the abscissa of Fig. 6. In his theoretical calculations on this problem Harrison[3] of Battelle chose 20 microns as

TABLE 8

RESULTS OF ANNEALING OF GRAPHITE-UO_2 SPECIMENS

Specimen	Size of UO_2 Particle (Microns)	Resistivity (microhm -cm)			Adjusted Resistivity*	
		Before Irrad.	After Irrad.	After 425° Anneal	After Irrad.	After 425° Anneal
R-1	None	1409	1702	1475	1208	1047
R-2	"	1432	1892	1519	1321	1061
R-6	"	1444	1874	1549	1298	1073
S-5	586	1401	1586	1509	1132	1077
S-9	586	1437	1843	1555	1283	1082
S-12	586	1421	1733	1528	1220	1075
T-2	334	1399	1713	1511	1224	1080
T-6	334	1419	1757	1546	1238	1090
T-17	334	1430	1675	1550	1171	1084
U-4	94	1404	1819	1628	1296	1160
U-7	94	1459	1909	1691	1308	1159
U-11	94	1430	1774	1632	1241	1143
V-3	< 44	1503	2998	2595	1995	1727
V-7	< 44	1509	2771	2468	1836	1635
V-8	< 44	1510	2502	2216	1657	1468

* Resistivity before irradiation = 1000

TABLE 9

AVERAGE ADJUSTED RESISTIVITIES

Specimen Type	Adjusted Resistivity		
	Before Irradiation	After Irradiation	After 425° Anneal
R	1000	1276	1060
S	1000	1212	1078
T	1000	1211	1085
U	1000	1282	1153
V	1000	1829	1610

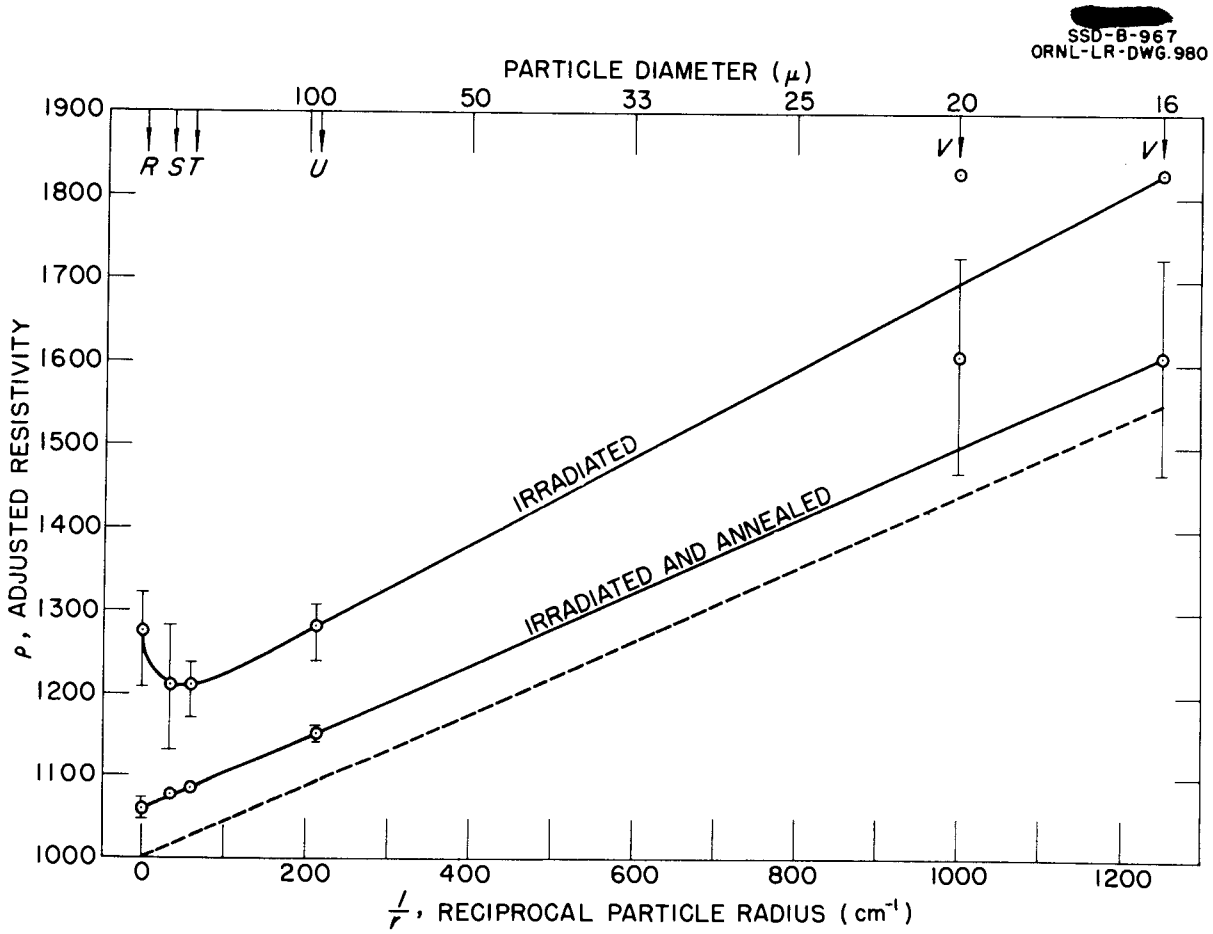

Fig. 6. RECIPROCAL PARTICLE SIZE vs. RESISTIVITY OF GRAPHITE-UO_2 SPECIMENS

the average particle diameter and this point is indicated on the graph. Later information from those who made the specimens at Battelle indicates that the average particle diameter might be less than 20 microns. The average resistivity values after annealing for all the other specimens lie in nearly a straight line and if this line is extrapolated to the average ordinate value for the V specimens (1610) the intersection indicates an average particle diameter on the abscissa of about 16 microns. The value derived in this way is certainly very rough. It is perhaps because of the wide range of particle size in the V specimens that there is such a wide spread in the measured values even after annealing. Variations in both particle size and consequently resistivity values make the location of an accurate point for the V specimens very difficult.

A comparison of the three adjusted resistivity values in Table 8 for any given type of specimen indicates that the spread between individual specimens is much less after annealing than after irradiation except in the case of the V-type specimens. Also, it is clear that the R specimens which suffer only neutron damage recover the most upon annealing, for as can be seen in Fig. 6 the R specimen resistivity value is the lowest after annealing. It is well known that the greater part of neutron damage in graphite anneals out between around 200 or 300°C while the remainder anneals out at temperatures above 1000°C. From the resistivity values for the R specimens, it would appear that about three-fourths of the damage has been removed by annealing up to 425°C and that about one-fourth remains. Upon consideration of the relative amount of energy involved in a neutron collision and in a fission-particle collision with carbon atoms, it seems that fission fragments would certainly produce more damage of a more permanent nature than neutrons. Hence, it may well be that the decrease in resistivity values after annealing for the S, T, U, and V specimens is merely the annealing of neutron damage in the matrix with the fission damage being unaffected at this annealing temperature.

If it is assumed that a further anneal at a temperature slightly above 1000°C would remove all the neutron damage and would still not affect the fission damage, a line dotted in Fig. 6 for this complete neutron-damage anneal could be drawn parallel to the straight solid line intersecting the pre-irradiation value (1000) at $\frac{1}{r} = 0$ (R specimen). The value of the ordinates between the dotted line and the horizontal line (1000) at the bottom of the graph representing the pre-irradiation value is then a measure of the fission damage as measured by electrical resistivity in the specimens containing UO_2. These values are 15, 26, 93, and 550 for the S, T, U and V specimens respectively. Since the pre-irradiation normalized resistivity is 1000, then the percentage changes for fission damage alone may be considered as 1.5, 2.6, 9.3, and 55% respectively. In effect, the construction of a straight line between points in Fig. 6 is equivalent to stating that fission damage is inversely proportional to the radius (or diameter) of the fission particle.

In order to calculate the expected effect in respect to resistivity changes in these specimens, Harrison[3] made a thorough theoretical analysis of the effect of fission and neutron damage. He computed the fission damage for particles dispersed in a matrix in four steps: (1) determination of the percentage volume of the matrix within the range of fission fragments, (2) determination of the average relative exposure in the damaged regions of the matrix, (3) determination of the change of property in the damaged region and (4) determination of the change in bulk property of the matrix material, taking into account the other three factors.

Calculations of step (1) follows from purely geometrical considerations. First, it is assumed that each UO_2 particle is a sphere and that the volume of

matrix material damage is an enveloping spherical shell whose thickness is the range of fission fragments in the matrix material.

Let V = the fractional volume of matrix damaged

V' = the fractional volume occupied by UO_2

$D = 2r$ = diameter of each particle

R_m = range of fission fragments in the matrix.

then

$$V = V' \left[\left(1 + \frac{R_m}{r}\right)^3 - 1 \right]$$

or

$$V = 6V' \frac{R_m}{D} \left[1 + 2\frac{R_m}{D} + \frac{4}{3}\frac{R_m^2}{D^2} \right] \qquad (1)$$

$V = 1$ if the above expressions are greater than unity.

Immediately a difficulty arises in the application of the above formula in the choice of a value for R_m. Not only is there a difference in the range of light and heavy fragments, but the range will also be affected by the degree of porosity of the graphite matrix. Harrison chose 17 microns as the most reasonable figure for the maximum range of fragments for producing displacements.

The results of calculations for the fractional volume of graphite damaged are given in column 3 of Table 10. Two possible values of particle size for the V-type specimens are considered, 20 microns and 16 microns. The fission-damage values given in column 2 are those derived experimentally and taken from Fig. 6 as described above.

In the calculation of step (2) Harrison defined relative exposure as being proportional to the number of displaced matrix atoms in the damaged spherical shell and inversely proportional to the volume of the shells. In

TABLE 10

COMPARISONS OF EXPERIMENTAL RESULTS AND THEORY

	1	2	3	4	5	6	7
Specimen Type	Diameter (microns)	Fission Damage, Experimental (%)	Fraction of Volume Damaged (V)	Theoretical Resistivity Change (%)	Fraction of Fission Particles Emerging (f)	Fractional Path in Matrix (S)	fS
V	16	55.0	86		0.914	0.558	0.510
	20	55.0	56	95	0.802	0.534	0.428
U	94	9.3	4.6	4.6	0.190	0.501	0.095
T	334	2.6	1.0	1.0	0.054	0.5	0.027
S	586	1.5	0.55	0.55	0.031	0.5	0.0155

other words, it is the average density of displaced atoms in the damaged regions. Relative exposure was calculated in such a way that its value for a completely homogeneous dispersion of fuel would be unity.

Step (3) involved use of the relative exposure of step (2) to determine the change in property of the spherical-shell damaged regions from known data on radiation damage. From the theory on relative number of atomic displacements produced by fission fragments and fast neutrons, and from damage experimentally produced in graphite by fast neutrons, Harrison calculated that the spherical shells in this experiment should all be saturated with an amount of fission damage so that their resistivity is equal to four times that of the undamaged region.

The determination of the last step (4) of the change in bulk property followed from what is known about conduction of electricity through heterogeneous materials. Harrison used a formula from Maxwell with modification for small spheres imbedded in a matrix. The major factor in this formula was V, the fractional volume of matrix damaged. The final results of this calculation are given in column 4 of Table 10. These results are the right order of magnitude, but do not compare too well with the actual results of column 2.

It is perhaps unfortunate that more accurate data was not available to use in step (3) of the calculation for it is entirely possible that the relationship between fast-neutron damage and fission damage is not well enough established in regard to electrical resistivity to use in this case. However, it seems reasonable to expect that V, the fractional volume affected by fission fragments, should be a relevant factor in any theoretical consideration of fission damage.

Another approach to the theoretical aspect of fission damage in this experiment can also be taken. The chief reason for making the UO_2 fuel in the form of particles was to reduce the number of fragments which would emerge from the particle and thus affect the graphite matrix. The probability that a fission fragment can escape from a spherical particle of diameter D can be calculated. It can be shown that the probability that a line drawn at random to the surface of a sphere from any point within the sphere will have a length between x and x + dx is

$$P(x)\,dx = 3/2D\,(1 - \frac{x^2}{D^2})\,dx \qquad (2)$$

For a fissioning atom situated inside a spherical particle whose fragments have a range, R_f, inside the particle the fraction f of the fission fragments which escape from the particle is

$$f = \int_0^{R_f} P(x)\,dx = \frac{3}{2}\,\frac{R_f}{D}\,(1 - \frac{R_f^2}{3D^2}) \qquad (3)$$

The above is valid if R_f if less than D. If R_f is equal to or greater than D, then f = 1. Certainly f will also be a relevant factor in considering fission damage. Harrison used this factor in step (2) of his calculations and it has also been considered by Faris.[7]

The value of R_f which might apply to the particles in the specimens in this experiment is open to question. The average range in UO_2 is 9.4 microns according to Howe and Weber,[8] however the particles used in these specimens were made by mixing the UO_2 with shellac, drying, crushing and passing through

---

(7) F. E. Faris, Uranium-bearing Graphite Fuel Elements, Reactor Science and Technology, TID-2004, Vol. 2, No. 4, Dec. 1952, p. 95-112.

(8) J. P. Howe and C. E. Weber, Limitations on the Performance of Nuclear Fuels, Reactor Science and Technology, TID-2012, Vol. 4, No. 1, March 1954, p. 163.

sieves. Since the particles occupy 5% by weight and 3% by volume of each specimen then their density is about twice that of the graphite matrix or several times less than that of pure UO_2 (10.9 g/cc). However, it is certainly true that in most cases the fission fragments must pass through some UO_2 to emerge. The value of R_f probably varies from 10 microns up to 16 microns. It is probably safe to say that R_f is about 12 microns on the average and that it may be considered less than the average diameter D of the V-type specimens. Calculations of f assuming R_f = 12 microns are shown in column 5 of Table 10.

It is also pertinent to deal with the average path length of the fission fragment. The average path length within the particle of those fragments which escape is

$$\bar{x} = \frac{\int_0^{R_f} x \; p(x)\, dx}{\int_0^{R_f} p(x)\, dx} = \frac{\frac{3}{2D}\left(\frac{R_f^2}{2} - \frac{R_f^4}{4D^2}\right)}{f}$$

$$\bar{x} = \frac{\frac{3}{4D} R_f^2 \left(1 - \frac{R_f^2}{2D^2}\right)}{f} = \frac{1}{2} R_f \frac{\left(1 - \frac{R_f^2}{2\,D^2}\right)}{\left(1 - \frac{R_f^2}{3D^2}\right)}$$

$$= \frac{1}{2} R_f \left(\frac{6\,D^2 - 3\,R_f^2}{6\,D^2 - 2\,R_f^2}\right) \qquad (4)$$

The average fractional path length of the fission fragment remaining outside the particle is

$$S = 1 - \frac{\bar{x}}{R_f} = 1 - \frac{1}{2}\left(\frac{6D^2 - 3\,R_f^2}{6D^2 - 2\,R_f^2}\right) \qquad (D \gg R_f) \qquad (5)$$

It is evident that for large particles the fission fragments entering the graphite will have half their range left. Values of S are shown in column 6 of Table 10.

Perhaps an effective measure of fission damage would be the product fS which is proportional to the integrated range of fragments in the graphite.

These values shown in column 7 are in fairly good ratio with corresponding experimental values in column 2; the fact that they are almost equal is fortuitous. Another factor which should be taken into account is the effectiveness of the fragment in producing displaced atoms along its path. Faris[7] and Brown[9] have dealt with this problem. It will not be considered here since it would add perhaps only a slight correction to the value of S.

Attention should be called also to the results of the short-time irradiation test. If one assumes that the 7.5-hr pile irradiation was too brief for any appreciable neutron damage, then the change in resistivity for the U and V specimen were caused only by fission damage. The change for the V specimen was about 4.7 times that of the U specimen which is in good agreement with the theoretical figures shown in column 5 or column 7.

CONCLUSIONS:

The changes in physical properties of irradiated graphite specimens containing UO_2 particles of different diameters are not at variance with what might be expected with one exception, namely, a loss of weight. No satisfactory explanation has been found for the loss of weight following irradiation.

Measurements of electrical resistance following annealing treatments seemed to indicate that neutron damage in graphite anneals more readily than fission-fragment damage. If the assumption that neutron-damage effects can be separated from fission-damage effects by annealing, is valid, then a direct measure of fission damage is obtained.

---

(9) F. W. Brown, Theory of Ionization and Atomic Displacement Produced by Fast Particles in Graphite, NAA-SR-4.

The amount of fission damage then appears to be inversely proportional to the diameter of the UO_2 particles. This result is in agreement with theory to a first approximation for larger size particles (greater than 100 microns) whether one considers the damage to be proportional to the fractional volume of graphite affected or proportional to the fractional number of fragments which escape the particles. It is unfortunate that exact determinations of particle diameter were impossible for the V-type specimens used in this experiment. The wide range in particle diameters in these specimens not only made wide variations in measured properties but also prevented a check of theoretical predictions with any degree of certainty.