[redacted]

CENTRAL RESEARCH LIBRARY
DOCUMENT COLLECTION
Reference

MARTIN MARIETTA ENERGY SYSTEMS LIBRARIES
3 4456 0360705 0

ORNL-1732
Progress
5A

DECLASSIFIED
CLASSIFICATION CHANGED TO:
BY AUTHORITY OF: AEC 1216-55
BY: Rel 6-8-55

AEC RESEARCH AND DEVELOPMENT REPORT

STABLE ISOTOPE RESEARCH AND PRODUCTION

DIVISION SEMIANNUAL PROGRESS REPORT

FOR PERIOD ENDING MAY 20, 1954

CENTRAL RESEARCH LIBRARY
DOCUMENT COLLECTION
LIBRARY LOAN COPY
DO NOT TRANSFER TO ANOTHER PERSON
If you wish someone else to see this document, send in name with document and the library will arrange a loan.

OAK RIDGE NATIONAL LABORATORY
OPERATED BY
CARBIDE AND CARBON CHEMICALS COMPANY
A DIVISION OF UNION CARBIDE AND CARBON CORPORATION
UCC
POST OFFICE BOX P
OAK RIDGE, TENNESSEE

[redacted]

[redacted]

[redacted]

ORNL 1732
Th do m t t of 66 p g
Copy 5 f 105 p S A

Cont act No W 7405-eng 26

STABLE ISOTOPE RESEARCH AND PRODUCTION DIVISION SEMIANNUAL PROGRESS REPORT

For Period Ending May 20 1954

C P Keim, Director

DATE ISSUED

JUL 23 1954

OAK RIDGE NATIONAL LABORATORY
Ope t d by
CARBIDE AND CARBON CHEMICALS COMPANY
A D i o of U o Ca b d d C bo Co p t o
Post Off ce Box P
O k R dge Te es e

[redacted]

3 4456 0360705 0

[redacted]

INTERNAL DISTRIBUTION

1 C E Center
2 Biology Library
3 Health Physics Library
4 6 Central Research Library
7 Reactor Experimental Engineering Library
8 12 Laboratory Records Department
13 Laboratory Records ORNL R C
14 C E Larson
15 L B Emlet (K 25)
16 J P Murray (Y 12)
17 A M Weinberg
18 E H Taylor
19 E D Shipley
20 W H Jordan
21 F C VonderLage
22 J A Swartout
23 S C Lind
24 F L Culler
25 A H Snell
26 A Hollaender
27 M T Kelley
28 G H Clewett
29 K Z Morgan
30 T A Lincoln
31 A S Householder
32 C S Harrill
33 C E Winters
34 D W Cardwell
35 E M King
36 D D Cowen
37 P M Reyling
38 C P Keim
39 S Cromer
40 J M Herndon
41 R S Livingston
42 F W Hurd
43 C E Normand
44 J R McNally Jr
45 C R Baldock
46 Boyd Weaver
47 G C Williams
48 P M Uthe
49 R W Johnson
50 E J Murphy
51 P S Baker
52 M J Skinner

EXTERNAL DISTRIBUTION

53 58 Argonne National Laboratory
59 60 Atomic Energy Commission Washington
61 63 Brookhaven National Laboratory
64 65 Carbide and Carbon Chemicals Company (K 25 Plant)
66 69 Carbide and Carbon Chemicals Company (Y 12 Plant)
70 Chicago Patent Group
71 Chief of Naval Research
72 74 duPont Company Augusta
75 General Electric Company Richland
76 Hanford Operations Office
77 Iowa State College
78-79 Knolls Atomic Power Laboratory
80 Los Alamos Scientific Laboratory
81 Naval Research Laboratory
82 83 New York Operations Office
84 Patent Branch, Washington
85 Savannah River Operations Office Augusta

[redacted]

[redacted]

86 duPont Company, Wilmington
87 89 University of California Radiation Laboratory, Berkeley
90-104 Technical Information Service Oak Ridge
105 Division of Research and Medicine ORO

[redacted]

[redacted]

Reports previously issued in this series are as follows

Y 497	July 1 1949 to September 30 1949
Y 550	October 1 1949 to December 31 1949
Y 586	January 1 1950 to March 31 1950
Y 636	April 1 1950 to June 30 1950
Y 685	July 1 1950 to September 30 1950
Y 723	October 1 1950 to December 31 1950
Y 765	January 1 1951 to March 31 1951
Y 797	April 1 1951 to June 30 1951
Y 821	July 1 1951 to September 30 1951
ORNL 1228	October 1 1951 to December 31 1951
ORNL 1298	January 1 1952 to March 31 1952
ORNL 1356	April 1 1952 to June 30 1952
ORNL 1434	July 1 1952 to September 30 1952
ORNL 1483	Period Ending December 31 1952
ORNL 1563	Period Ending May 20 1953
ORNL 1617	Period Ending November 20 1953

[redacted]

[redacted]

CONTENTS

PUBLICATIONS vii

PAPERS PRESENTED AT MEETINGS vii

TRAVELING LECTURES viii

ARTICLES PUBLISHED BY USERS OF STABLE ISOTOPES viii

PAPERS PRESENTED AT MEETINGS BY USERS OF ISOTOPES ix

OTHER MEETINGS ATTENDED BY MEMBERS OF THE DIVISION x

ISOTOPE ANALYSIS METHODS LABORATORY 1
- Introduction 1
- Nuclear Resonance 1
  - Project NR 1 – table of nuclear moment data 1
  - Project NR 2 – nuclear resonance analytical applications 1
  - Project NR 3 – nuclear magnetic resonance equipment development 2
  - Project NR 4 – measurement of nuclear magnetic moments 2
- Microwave Spectroscopy 3
  - Project M 1 – microwave spectrum of vinyl fluoride 3
  - Project M 2 – microwave spectrum of vinyl acetylene 3
- Infrared Spectroscopy 3
  - Project IR 3 – infrared and microwave spectra of formyl and of deutero-formyl fluoride 3
- Optical Spectroscopy 4
  - Project OS 1 – optical instrumentation 4
  - Project OS 2 – spectroisotopic investigations 6
  - Project OS 3 – photodetector investigations 7
  - Project OS 6 – hyperfine-structure studies of U^{233} and U^{235} 7
  - Project OS 7 – Zeeman spectroscopy 9
  - Project OS 8 – theory of the aperture limited Fabry Perot interferometer 10
  - Project OS 9 – simple hollow cathode source for spectrochemical and spectroisotopic analysis 12
  - Project OS 10 – configuration and level corrections for aluminum(II) silicon(III) and gallium(II) 14
- Spectrochemistry 14
  - Project SC 1 – general spectrochemical analysis 14
  - Project SC 2 – analysis of stainless steels 15
  - Project SC 3 – rare earth mixtures 16
  - Project SC 4 – electronic spectrochemistry 16
- X Rays 17
  - Project X 1 – chemical analysis by x ray absorption and fluorescence 17
  - Project X 2 – x ray diffraction analysis 18
  - Project X 3 – hyperfine structure in uranium isotopes 18
- Publications 18

MASS SPECTROMETER LABORATORY 21
- Introduction 21
- Iridium Source Oven Filaments 21
- Rapid Solid Sample Analyses 22
- Analyses of Potassium 40 22
- New Isotopic Abundances 22
- Fission Products 23

[redacted]

[redacted]

Determination of Nickel in HRP Fuel 24
Investigation of ARE Fuels 24
Sensitivity of the General Electric Gas Sample Mass Spectrometer 26
Equipment Development 27
Design of a 6-in Radius, 60-deg Sector Type of Mass Spectrometer 28

STABLE ISOTOPE SEPARATION RESEARCH AND CALUTRON OPERATIONS 31
Introduction 31
Collections and Related Developments 31
Potassium series GN XBX 31
Lanthanum series GO XAX 31
Hafnium series GP XAX 32
Zirconium series GQ XAX 32
Chromium series GR XBX and XAX and series GX XAX 32
Nickel series GT XBX 33

STABLE ISOTOPE CHEMISTRY RESEARCH AND PRODUCTION 34
Introduction 34
Preparation of Charge Materials 34
Lanthanum and samarium 34
Nickel 34
Potassium 34
Chromium 34
Zirconium 35
Hafnium 35
Iron 35
Chemical Refinement of Isotopes 35
Lanthanum 35
Titanium 35
Iridium 35
Calcium 35
Potassium 36
Separation of Rare Earths 37

RESEARCH AND DEVELOPMENT STABLE ISOTOPES 39
Introduction 39
Inert Gas Separations 39
Metal Casting 40
Lithium 6 targets 40
Spectrometer Shield 40
Target Preparation 41
Massive metal 41
Metal films 41
Salt films 41
Seismograph Operation 41
Miscellaneous 42
Publications 42

UTILIZATION OF ENRICHED STABLE ISOTOPES 44

ORGANIZATION CHART 56

[redacted]

[redacted]

PUBLICATIONS

C P Keim Enriching Stable Isotopes Electro magnetically *J Appl Phys* **24** 1255 (Oct 1953)

P S Baker F R Duncan and H B Greene Preparation of High Purity Lithium Metal by Vacuum Distillation " *Science* **118**, 778 (1953)

K L Vander Sluis and J R McNally Jr Nuclear Moments of U 233 and U 235 " *J Opt Soc Amer* **44** 87 (1954)

J R Sites, George Consolazio and Russell Baldock *Isotopic Abundances of Palladium* ORNL 1652 (Jan 6 1954)

Boyd Weaver The Separation Factor, A Criterion for Evaluation of Separation Procedures ' *Anal Chem* **26** 474 (1954)

Boyd Weaver Fractional Separation of Rare Earths by Precipitation with Mandelic Acid *Anal Chem* **26** 476 (1954)

Boyd Weaver Fractional Separation of Rare Earths by Oxalate Precipitation from Homogeneous Solution *Anal Chem* **26** 479 (1954)

P S Baker F R Duncan, and H B Greene Preparation of Isotopic Lithium Metal by Thermo chemical Reduction " *Science* **119** 469 (1954)

P S Baker Apparatus for Demonstrating Paper Chromatography *J Chem Educ* **31** 237 (1954)

P S Baker and W R Rathkamp *Apparatus for Measuring Current in Moving Boundary Experi ments* ORNL 1704 (May 25 1954)

PAPERS PRESENTED AT MEETINGS

C P Keim *A Review of the Stable Isotope Program at ORNL* Tennessee Academy of Science Oak Ridge Tenn Nov 27 28, 1953

Russell Baldock *High Temperature Mass Spec trometry,* Tennessee Academy of Science Oak Ridge, Tenn Nov 27 28, 1953

L O Gilpatrick *Mass Spectrometer Analysis of* UO_2F_2 *in* UF_4 Tennessee Academy of Science Oak Ridge Tenn Nov 27 28 1953

Boyd Weaver *Recent Advances in Rare Earth Chemistry* Tennessee Academy of Science Oak Ridge Tenn Nov 27 28 1953

C P Keim *The Electromagnetic Isotope Separa tion of the Palladium Platinum and Rare Earth Elements* Regional Conclave of American Chemi cal Society, New Orleans, La , Dec 10-12 1953

J R McNally, Jr *Spectroisotopy – Applications of High Resolution Spectroscopy* Regional Con clave of the American Chemical Society New Orleans La Dec 10-12 1953

E L Grove and J A Norris *The Effects of Certain Alkali Compounds in the Burning of Powdered Graphite Samples,* Regional Conclave of the American Chemical Society New Orleans La Dec 10 12 1953

P S Baker F R Duncan and H B Greene *Thermochemical Reduction of Lithium* Meeting of the American Association for the Advancement of Science Boston Mass Dec 27, 1953

P M Griffin *Use of the Echelle in Spectro chemical Problems* Meeting of the Pittsburgh Section of the Society for Applied Spectroscopy Jan 20 1954

J R McNally Jr *Source Requirements and Applications for High Resolution Spectroscopy,* Pittsburgh Conference on Analytical Chemistry and Applied Spectroscopy Mar 1 5, 1954

C E Melton *Measurements of Ionization Pro duced by 5 Mev Alpha Particles in Argon Mixtures* Southeastern Section of the American Physical Society, Knoxville Tenn April 3 1954

C P Keim *Production and Uses of Enriched Stable Isotopes* Symposium at Brookhaven National Laboratory May 14 1954

H M Rosenstock J R Sites, R Baldock, and C E Melton *Iridium Filaments for Vaporizing Solids* Second Annual Meeting of ASTM E 14 Com mittee on Mass Spectrometry New Orleans La May 23 28 1954

J R Sites H M Rosenstock R Baldock and C E Melton *Rapid Multicomponent Microassay,* Second Annual Meeting of ASTM E 14 Committee on Mass Spectrometry New Orleans La May 23 28 1954

J R Sites *Inorganic Compound Identification* Second Annual Meeting of ASTM E 14 Committee on Mass Spectrometry, New Orleans La May 23 28, 1954

J R McNally, *Isotope Analysis by Emission Spectroscopy* Frontiers in Spectroscopy Symposium Society for Applied Spectroscopy New York N Y May 27 28 1954

[redacted]

[redacted]

TRAVELING LECTURES

C P Keim *A Survey of Nine Years of Isotope Separation in the Calutron* Vanderbilt University and University of Mississippi

J R McNally Jr *Spectroscopic Research at the Oak Ridge National Laboratory* University of Miami and The Citadel

Russell Baldock *Current Research in Mass Spectrometry* Alabama Polytechnic Institute

Russell Baldock *Recent Developments in Mass Spectrometry* Clemson Agricultural College Florida State College and Miami University

Russell Baldock *Mass Spectrometry in Modern Physics* Virginia Military Institute

Russell Baldock *Analysis with a Mass Spectrometer* Georgia Institute of Technology

Boyd Weaver *Recent Advances in Rare Earth Chemistry* Vanderbilt University Louisiana State University Florida State University and University of Virginia

---

ARTICLES PUBLISHED BY USERS OF STABLE ISOTOPES

	ISOTOPES USED
C K Bockelman C P Browne W W Buechner and A S Sperduto (Massachusetts Institute of Technology) Inelastic Scattering of Protons and Deuterons from B^{10} and N^{14} *Phys Rev* **92** 665 (1953)	B^{10}
J K Lerohl M L Pool D N Kundo and R A House (Ohio State University) Technetium of Mass Number 98 *Phys Rev* **92** 934 (1953)	Mo^{95} Mo^{98} Mo^{100}
M L Perlman W Berstein and R B Schwartz (Brookhaven National Laboratory) The Decay Scheme of Ag^{108} *Phys Rev* **92** 1236 (1953)	Sr^{84}
C D Jeffries (University of California) The Spin and Magnetic Moment of Ti^{47} and Ti^{49} and the Magnetic Moment of Ge^{73} *Phys Rev* **92** 1262 (1953)	Ti^{47} Ti^{49} Ge^{73}
W C Koehler and E O Wollan (Oak Ridge National Laboratory) Paramagnetic Scattering of Neutrons by Rare Earth Oxides *Phys Rev* **92** 1380 (1953)	Nd^{142} Nd^{144} Nd^{146}
G L Rogosa and G Schwartz (Florida State University) Mo *K* and U *L* X Ray Transitions from Separated Isotopes *Phys Rev* **92** 1434 (1953)	Mo^{92} Mo^{95} Mo^{100} U^{235} U^{238}
H Casson L S Goodman and V E Krohn (Argonne National Laboratory) Energy Levels of Ti^{48} from Decay of Sc^{48} and V^{48} *Phys Rev* **92** 1517 (1953)	Ti^{48}
N S Wall (Massachusetts Institute of Technology) Nuclear Reaction Determination of the Sn^{124} Te^{124} Mass Difference *Phys Rev* **92** 1526 (1953)	Sn^{124} Te^{124}
L M Bollinger S P Harris C T Hibdon and C O Muehlhause (Argonne National Laboratory) Neutron Absorption and Scattering by Hafnium *Phys Rev* **92** 1527 (1953)	Hf^{176} Hf^{177} Hf^{178} Hf^{179} Hf^{180}
H Arroe (University of Wisconsin) Isotope Shift in the 58 Ce II Spectrum *Phys Rev* **93** 94 (1954)	Ce^{136} Ce^{138}
M R Lee and R Katz (Kansas State College) Radioactivity of Sm^{153} and Eu^{155} *Phys Rev* **93** 155 (1954)	Sm^{152} Sm^{154}
S P Davis (University of California) Nuclear Spins and Band Spectra of the Selenium Isotopes, *Phys Rev* **93** 159 (1954)	Se^{77} Se^{78} Se^{80}
F K McGowan (Oak Ridge National Laboratory) Measure of K Shell Internal Conversion Coefficients with Coincidence Scintillation Spectrometer *Phys Rev* **93** 163 (1954)	Hf^{180} Te^{122}
D R Wiles (Massachusetts Institute of Technology) Search for the $P_{1/2}$ Isomeric State in Tc^{101} and Identification of Energy Levels *Phys Rev* **93** 181 (1954)	Mo^{100}
F K McGowan (Oak Ridge National Laboratory) Angular Correlation of Gamma Rays in Ta^{181} *Phys Rev* **93** 471 (1954)	Hf^{180}

[redacted]

[redacted]

W E Taylor L N Russell and J N Cooper (Ohio State University) Resonance Capture of Protons by Mg^{25}, *Phys Rev* **93** 1056 (1954) — Mg^{25}

G M Cork M K Brice, G D Hickman and L C Schmid (University of Michigan) Radiation from Antimony 122 *Phys Rev* **93** 1059 (1954) — Sb^{121}

G M Frye Jr (Los Alamos Scientific Laboratory) Charged Particles from the Interaction of 14 Mev Neutrons with Li^6 and Li^7 *Phys Rev* **93** 1086 (1954) — Li^6 Li^7

K Murakawa (Institute of Science and Industry, Tokyo and University of Wisconsin) Hyperfine Structure in the Spectra of Sb Sm Hg and Cd " *Phys Rev* **93** 1232 (1954) — Sb^{121} Sb^{123} Sm^{147} Sm^{149} Hg^{196}

B L Cohen (Oak Ridge National Laboratory) Potassium 44 *Phys Rev* **94** 117 (1954) — Ca^{44}

M H MacGregor and M L Weidenbeck (University of Michigan) The Third Forbidden Beta Spectrum of Rb^{87} *Phys Rev* **94** 138 (1954) — Rb^{87}

R T Nichols and E N Jensen (Iowa State College) Radioisotope P^{33} ' *Phys Rev* **94** 369 (1954) — S^{33}

R S Caird and A C G Mitchell (University of Indiana) The Disintegration of Co^{55} and I^{130}, *Phys Rev* **94** 412 (1954) — Te^{130}

C L McClelland H Mark and C Goodman (Massachusetts Institute of Technology) Electric Excitation of Low Lying Levels in Separated Wolfram Isotopes *Phys Rev* **93** 904 (1954) — W^{182} W^{186}

G A Williams D W McCall and H S Gutowsky The Nuclear Spin of Si^{29} ' *Phys Rev* **93** 1428 (1954) — Si^{29}

H E Banta and R L Macklin (Oak Ridge National Laboratory) The $Li^7(n\ t)$ Reaction *Science* **119** 350 (1954) — Li^7

PAPERS PRESENTED AT MEETINGS BY USERS OF ISOTOPES

D J Hughes W Y Kato and J S Levin (Brookhaven National Laboratory) Energy Levels in Hafnium Isotopes, *Phys Rev* **92** 1094A (1953)

C D Jeffries (University of California), The Spin and Magnetic Moment of Ti^{47} and Ti^{49} *Phys Rev* **92** 1096A (1953)

R L Macklin and H E Banta (Oak Ridge National Laboratory) $Li^7(d,t)Li^6$ Reaction *Phys Rev* **93** 924A (1954)

E C Woodward Jr (University of California) Isotope Displacement in λ 4415 A Cd II ' *Bull Am Phys Soc* **28,** 14 (1954)

H Marshak (Duke University) Total Neutron Cross Sections in the Kilovolt Region Cu, Cu^{63} Cu^{65} and Ga *Bull Am Phys Soc* **28,** 37 (1954)

H E Banta and R L Macklin (Oak Ridge National Laboratory) Search for the $Li^7(n\ t)$ Reaction," *Bull Am Phys Soc* **29** 11 (1954)

T W Bonner and C F Cook (Rice Institute), Neutron Thresholds in the Reactions $Li^7(d,n)^*Be^8$ and $Be^9(d\ n)^*B^{10}$, *Bull Am Phys Soc* **29** 11 (1954)

T H Handley and B L Cohen (Oak Ridge National Laboratory) New Isotope Identification Program on the Oak Ridge 86-Inch Cyclotron, *Bull Am Phys Soc* **29,** 23 (1954)

G Scharff Goldhaber and M McKeown (Brookhaven National Laboratory), New Isomers in Br and Cl *Bull Am Phys Soc* **29** 25 (1954)

R H Hughes (University of Wisconsin) Isotope Shift in the Li I Spectrum " *Bull Am Phys Soc* **29,** 33 (1954)

J H Gibbons and H W Newson (Duke University) Total Neutron Cross Sections in the Kilovolt Region Tl^{203} and Tl^{205} *Bull Am Phys Soc* **29** 56 (1954)

D A Dahlberg and L M Bollinger (Argonne National Laboratory) Analyses of Neutron Resonances in the Zinc Isotopes *Bull Am Phys Soc* **29** 57 (1954)

C M Braains (Massachusetts Institute of Technology) $(d\ p)$ Reactions of Ca^{42} and Ca^{44} *Bull Am Phys Soc* **29** 62 (1954)

[redacted]

[redacted]

OTHER MEETINGS ATTENDED BY MEMBERS OF THE DIVISION

C P Keim American Chemical Society Kansas City Kans Mar 24 30 1954 Member of National Committee on Constitution and Bylaws

C P Keim American Physical Society New York N Y Jan 28 30 1954

F R Duncan Basic Materials Exposition and Conference Chicago Ill May 16 20 1954

G F Wells ASTM E 14 Committee Meeting on Mass Spectrometry New Orleans La May 23 28 1954

L O Love American Physical Society Washington D C April 29–May 1 1954

C E Normand American Physical Society Austin Tex Feb 26 27 1954

J A Norris Second Annual Seminar on Spectroscopy and the Spring Meeting of the Southern Association of Spectrographers Gainesville Fla Feb 17 19 1954 Treasurer and Program Chairman for Spring Meeting of Southern Association of Spectrographers

Z Combs Second Annual Seminar on Spectroscopy and Spring Meeting of Southern Association of Spectrographers Gainesville Fla Feb 17 19 1954 Secretary of Southern Association of Spectrographers

[redacted]

[redacted]

STABLE ISOTOPE RESEARCH AND PRODUCTION DIVISION SEMIANNUAL PROGRESS REPORT

ISOTOPE ANALYSIS METHODS LABORATORY

J R McNally Jr Department Head

INTRODUCTION

The work of the Isotope Analysis Methods Laboratory (spectroscopy research) is in the fields of nuclear resonance microwave infrared optical and vacuum spectroscopy spectrochemistry and x ray diffraction and absorption Research is directed toward potential methods of isotope analysis new analytical methods having application to immediate Laboratory or long range AEC needs and fundamental research on isotopes elements and compounds The work is reported on a project basis to give a more complete picture of the purpose activity and status of each report More detailed information on these or inactive projects may be obtained from the previous semiannual report [1]

Outstanding accomplishments during the period are as follows

1 Sixteen new nuclear magnetic resonance frequency ratios have been measured (Project NR 4)

2 The nuclear spin of U^{235} has been revised to $I = 7/2$ (Project OS 6)

3 The first Zeeman effects of a transuranic element plutonium have been observed (Project OS 7)

4 Critical studies of the x ray fluorescence analysis method have been made (Project X 1)

5 Infrared and microwave studies of normal and deuterated formyl fluoride have been made (Project IR 3)

NUCLEAR RESONANCE

H E Walchli

Project NR 1 – Table of Nuclear Moment Data

A compilation of pertinent data concerning the measurement of nuclear magnetic moments has been issued [2 3] Current data for inclusion in a second supplement have been collected by a thorough search of the literature and by continuing correspondence with approximately 30 scientists actively engaged in the obtaining of nuclear magnetic moment data by resonance and optical methods The second supplement to be issued in the near future will contain new entries for approximately 40 nuclides A similar collection of information on the nuclear quadrupole moments is contemplated

Project NR 2 – Nuclear Resonance Analytical Applications

The nuclear magnetic resonance spectrometer has been used in an attempt to analyze samples of a reactor solvent ($Na_9Zr_8F_{41}$) This solvent is a solid at room temperature and present spectrometer equipment is not usable in the high temperature region (>500 C) required to make the solvent a liquid Since chemical and molecular structure affects the frequency of resonance it was thought that the fluorine resonance shifts might reveal changes in the chemical state however the resonance line width for the solid sample was approximately 20 times that of the fluorine resonance in ionic solutions and much broader than the largest resonance shifts observed This method does not appear feasible for such solid state solvent analysis Examination of the sample for the proton resonance revealed that some hydrogen probably in the form of HF or H_2O was present in the sample Since neither HF nor H_2O is desirable from a corrosion standpoint the possibility that the nuclear magnetic resonance method may be useful in studies concerned with the removal of hydrogen compounds is being further investigated

[1] J R McNally *et al* *Stable Isotope Research and Production Semiann Prog Rep Nov 20 1953* ORNL 1617 p 1

[2] H E Walchli *A Table of Nuclear Moment Data* ORNL 1469 (April 1 1953)

[3] H E Walchli *A Table of Nuclear Moment Data Supplement No 1* ORNL 1469 (June 1 1953)

[redacted]

Project NR 3 – Nuclear Magnetic Resonance Equipment Development

A high gain chopper amplifier has been obtained from Varian Associates, and it will be installed in the magnet regulator system This type of regulator should remove the slow drifts now occurring in the present magnet regulator that are due to the direct coupled amplifiers Indications are that the new amplifier should provide instantaneous and long period regulation in the order of 1 part in 100 000

Project NR 4 – Measurement of Nuclear Magnetic Moments

New frequency ratio values for 16 nuclides of 12 elements have been determined by using the improved spectrometer and shielded room facilities The results of these measurements are listed in Table 1 Sixteen of these frequency ratios have not been reported elsewhere, and the others are in agreement with published values

TABLE 1 NEW NUCLEAR MAGNETIC RESONANCE FREQUENCY DETERMINATIONS

NUCLIDE RATIO	FREQUENCY RATIO	PRECISION ($\times 10^6$)	COMPOUND USED
Li^6/D^2	0 958638	±38	L Cl–D_2O
Li^7/Na^{23}	1 469225	±3	LiCl–NaCl
Na^{23}/D^2	1 723167	±34	NaCl–D_2O
Al^{27}/Na^{23}	0 985055	±12	$AlCl_3$–NaCl
P^{31}/L^7	1 041611	±30	H_3PO_4–LiCl
P^{31}/Na^{23}	1 530366	±42	H_3PO_4–NaCl
V^{50}/Rb^{85}	1 032631	±29	$VOCl_3$–RbCl
Cu^{63}/Na^{23}	1 002008	±16	Cu_2Cl_2–NaCl
Cu^{63}(metal)/Na^{23}	1 004371	±14	Cu–NaCl
Cu^{65}/Na^{23}	1 073475	±10	Cu_2Cl_2–NaCl
Cu^{65}(metal)/N^{23}	1 075960	±11	Cu–NaCl
Ga^{69}/Na^{23}	0 907349	±20	Ga_3Cl_3–NaCl
Ga^{71}/Na^{23}	1 152872	±8	$GaCl_3$–NaCl
Se^{77}/D^2	1 242100	±19	H_2Se–D_2O
Br^{81}/Na^{23}	1 020965	±14	NaBr
Rb^{85}/Cl^{35}	0 985431	±18	RbCl
Rb^{85}/D^2	0 628985	±5	RbCl–D_2O
Rb^{87}/Na^{23}	1 237041	±8	RbCl–NaCl
Cs^{133}/D^2	0 854496	±18	$CsNO_3$–D_2O
Tl^{205}/Tl^{203}	1 009816	±22	Tl acetate

MICROWAVE SPECTROSCOPY

Project M 1 – Microwave Spectrum of Vinyl Fluoride

H W Morgan J H Goldstein[4]

Experimental work on the microwave spectrum of vinyl fluoride has been completed, and a report on this study is being prepared Molecular parameters computed from these data will be checked by means of the ORACLE The energy levels of any near symmetric top may most simply be expressed[5] as a function of two moments of inertia and an asymmetry parameter δ, where $\delta = (b - c)/(a - c)$ These general expressions are being coded for the ORACLE so that energy levels and spectra for numerous similar molecules can be calculated

Project M 2 – Microwave Spectrum of Vinyl Acetylene

H W Morgan J H Goldstein

Experimental work on the microwave spectrum of vinyl acetylene has been completed and a report on the study is being prepared

The evaluation of the moments of inertia, asymmetry parameter, and centrifugal distortion constants by the method of least squares previously discussed[1] has proved to be impractical because of the magnitude of certain of the terms involved Members of the Mathematics Panel are now considering alternative methods of obtaining these parameters

INFRARED SPECTROSCOPY

Project IR 3 – Infrared and Microwave Spectra of Formyl and of Deutero Formyl Fluoride

P A Staats H W Morgan
J H Goldstein

Deutero formyl fluoride was synthesized and was studied in the infrared region in order to verify the assignment of fundamentals made previously for the HCOF spectrum The synthesis of dueteroformyl fluoride required quantities of anhydrous deuterated formic acid (DCOOD) This compound was prepared in two steps from normal oxalic acid In the first step, the oxalic acid was deuterated[6] by three successive crystallizations from pure D_2O each crystallization was followed by a dehydration *in vacuo* Anhydrous deutero formic acid was then obtained in approximately 100% yield by the glycerol catalyzed thermal decomposition of deutero oxalic acid, followed by distillation This high yield, although indicated by the work of Chattaway,[7] has not previously been reported Deutero formyl fluoride was then obtained from the reaction of the anhydrous deutero formic acid with benzoyl chloride in the presence of KF [8 9]

Experimental work on the infrared spectrum of HCOF and DCOF has been completed The frequencies assigned to the fundamental vibrations are given in Table 2 No absorption was observed which could be assigned to the CH bending vibrations perpendicular to the plane of the molecule This absorption should be of intensity comparable to the in plane vibration which was detected only at high pressures

The frequencies of the five in plane vibrations for the two isotopic molecules satisfy the Teller Redlich product rule[10] within the limits determined by the two assumed parameters, the moments of inertia about the *b* and *c* axes of the molecule This provides a confirmation of the assignments made

DCOF appears to exhibit strong Fermi resonance between the CF stretching and the CD in plane

[4] Consultant Emory University Atlanta Ga

[5] G W King R M Hainer and P C Cross *J Chem Phys* 11 27 (1943)

[6] R C Herman and V Williams *J Chem Phys* 8 447 (1940) also D E Wobbe and W A Noyes *J Am Chem Soc* 48 2856 (1926)

[7] F D Chattaway *J Chem Soc* 105 151 (1914)

[8] A N Nesmeyanov and E J Kahn *Ber* 67B 370 (1934)

[9] A N Maxhentsev *J Gen Chem (U S S R)* 15 915 (1945)

[10] O Redlich *Z physik Chem* B28 371 (1935)

TABLE 2 FUNDAMENTAL VIBRATIONS OF THE FORMYL FLUORIDE MOLECULE

BOND VIBRATION	HCOF (cm^{-1})	DCOF (cm^{-1})
CH stretching	2976	2270
CO stretch ng	1834	1793
CF stretching	1064	1074
CH bend ng	1343	967
FCO bending	661	658

bending vibrational levels that is interactions between these vibrations are sufficient to cause a perturbation of the levels which results in their mutual repulsion and a sharing of their intensity In the present case the CF stretching frequency is higher than expected and the CD in plane bending frequency is lower Also while the integrated absorption intensity of the two bands is equal to that of the two in HCOF at identical pressures within the limits of error of the integration, the integrated intensity of the CF band alone in DCOF is 26% less than that in HCOF

A normal coordinate treatment of this molecule is being carried out Preliminary values of the force constants have been determined (see Table 3) by assuming that the interaction coefficients d_{ij} are equal to zero for $i \neq j$ The C–F bond force constant differs significantly from the expected value of about 6×10^{-5} dyne cm^{-1}, thus indicating that the mathematical treatment may be incomplete at this stage Further study is being made The ORACLE has been employed in this study inas much as the evaluation of the force constants for the five in plane vibrations requires the solution of a complex 5×5 matrix

The microwave absorption spectra of HCOF and DCOF have been studied in the region 19 000 to 44 000 Mc Three transitions have been assigned tentatively on the basis of Stark effect patterns and are given in Table 4 The lines observed could arise from two possible structures, charac terized by FCO valence angles of 122 and 130 5 deg (based on assumed bond lengths r_{CH} = 1 08 A r_{CO} = 1 15 A and r_{CF} = 1 40 A)

The absence of strong Stark effects in the ob served lines and the absence of transitions with an intensity which is a function of the magnitude of μ_a (the dipole moment component along the inertial axis a) indicate that the value of μ_a is probably less than 0 2 Debye units The molecular structure presently assumed indicates that the low J transi tions which must be measured to obtain accurate values of the moments of inertia lie at frequencies in the range 55 to 108 kmc These will be studied in the future

TABLE 3 PRELIMINARY FORCE CONSTANTS FOR HCOF

BOND VIBRATION	FORCE CONSTANT ($\times 10^5$ dynes/cm)
CH st etchi g	4 74
CO stretch ng	11 65
CF stretching	10 75
CH bend ng	0 23
FCO bending	0 81

Based on FCO angle of 125 deg and bond d stance for C–H = 1 08 A C–O = 1 15 A and C–F = 1 40 A

TABLE 4 ASSIGNED MICROWAVE TRANSITIONS IN FORMYL FLUORIDE

Mc	MOLECULE	NUMBER OF LOBES OBSERVED	TRANSITION
36 945	HCOF	3	$4_{14}-5_{05}$
40 415	HCOF	8	$9_{27}-8_{18}$
40 220	DCOF	8	$8_{18}-9_{27}$

OPTICAL SPECTROSCOPY

Project OS 1 – Optical Instrumentation

G K Werner

A new kinematically designed mount for sensi tive adjustment of a concave grating was designed to permit the rapid readjustment of the grating to about 1 sec of arc in conjunction with spectroiso topic assay studies of lithium Grating shifts re quiring correction were the result of variable stresses set up in the grating room floor and walls by external temperature and moisture conditions Two of the three adjusting screws are mounted in a kinematic point, line, and plane arrangement that works against two springs and a flexure post These screws control individually the grating rota tion about a vertical or horizontal axis while all three control grating translation for fine focusing The new mounting is shown in Fig 1

A compact high dispersion Bausch & Lomb Echelle spectrograph was modified and evaluated qualitatively for possible use in the isotopic assay of lithium With the high dispersion of the Echelle (about 0 82 A/mm for the red 6707 lines), the iso tope lines are sufficiently separated and resolved to allow the use of a simple optical beam splitter The spectra of lithium helium and other materials excited in a hollow cathode discharge are simple

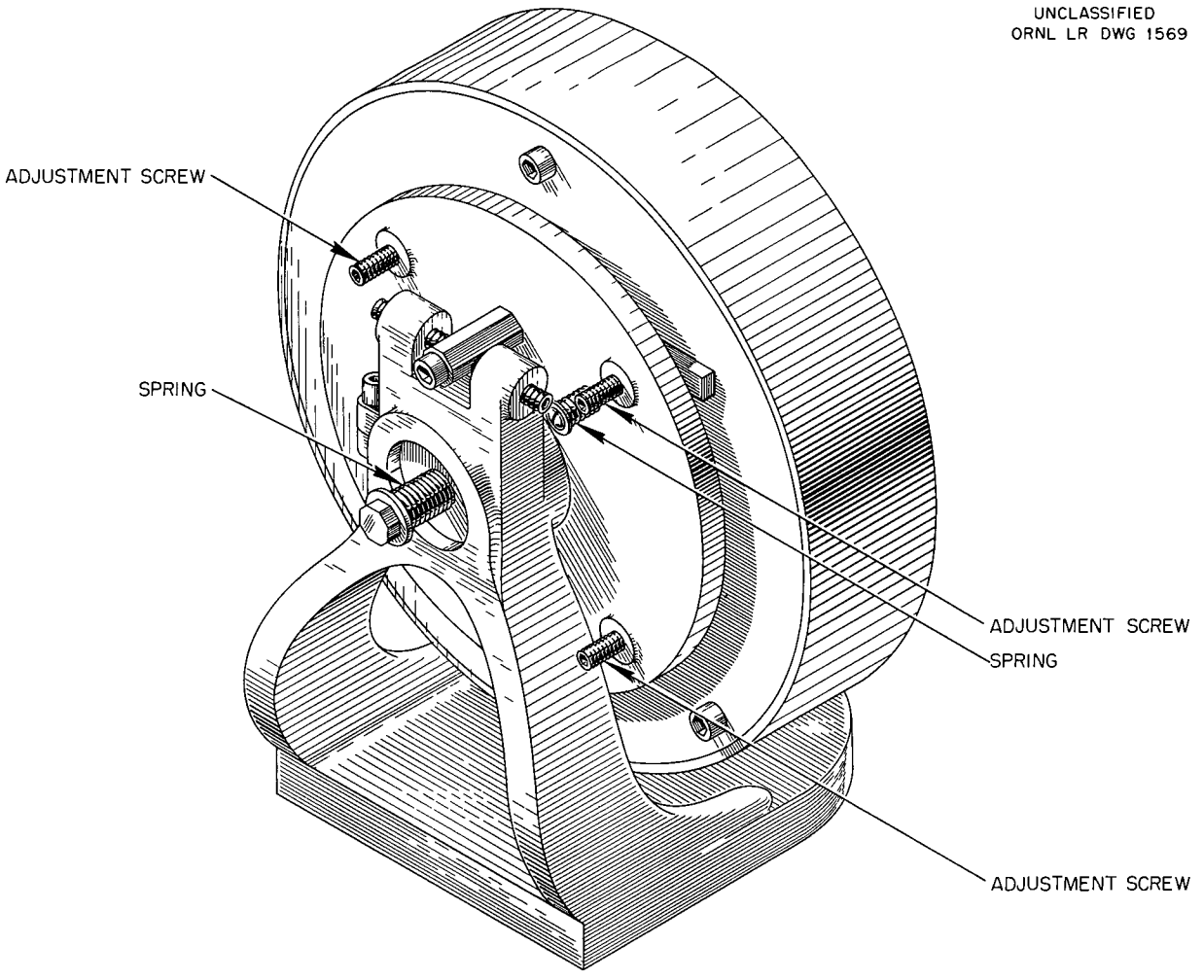

Fig 1 Kinematic Mount for Precision Adjustment of Concave Grating

enough that the customary crossed dispersion used with Echelles can be omitted and only a red glass filter need be used By proper choice of the order of interference of the lithium 6707 A lines, no appreciable interference from overlapping orders of other lines is experienced

An adjustable plane mirror was substituted for the fixed mirror provided to give a fine adjustment of the line image position The short entrance slit was replaced with a fixed slit 3 in long and curved to a radius of 20 7 in however the aperture of the Ebert optics and the housing construction limit the useful slit length to 2½ in The curvature of the entrance slit results in straight lines at the exit slit which simplifies beam splitting design

The beam splitter (shown schematically in Fig 2) is used to divide the closely spaced lines (all three lie within ½ mm) and to direct the light to the cathodes of three photomultiplier tubes

The splitting of the beam at the focal plane is accomplished by reflecting the narrow band of light of one line from the face of a selected aluminized microscope slide that is close to the edge so that the light from the adjacent line is passed by the edge as shown in Fig 2*a* Figure 2*b* illustrates the image dissector and integrating mirrors which refocus the 2½ in long images onto the 1 in long photosensitive surfaces

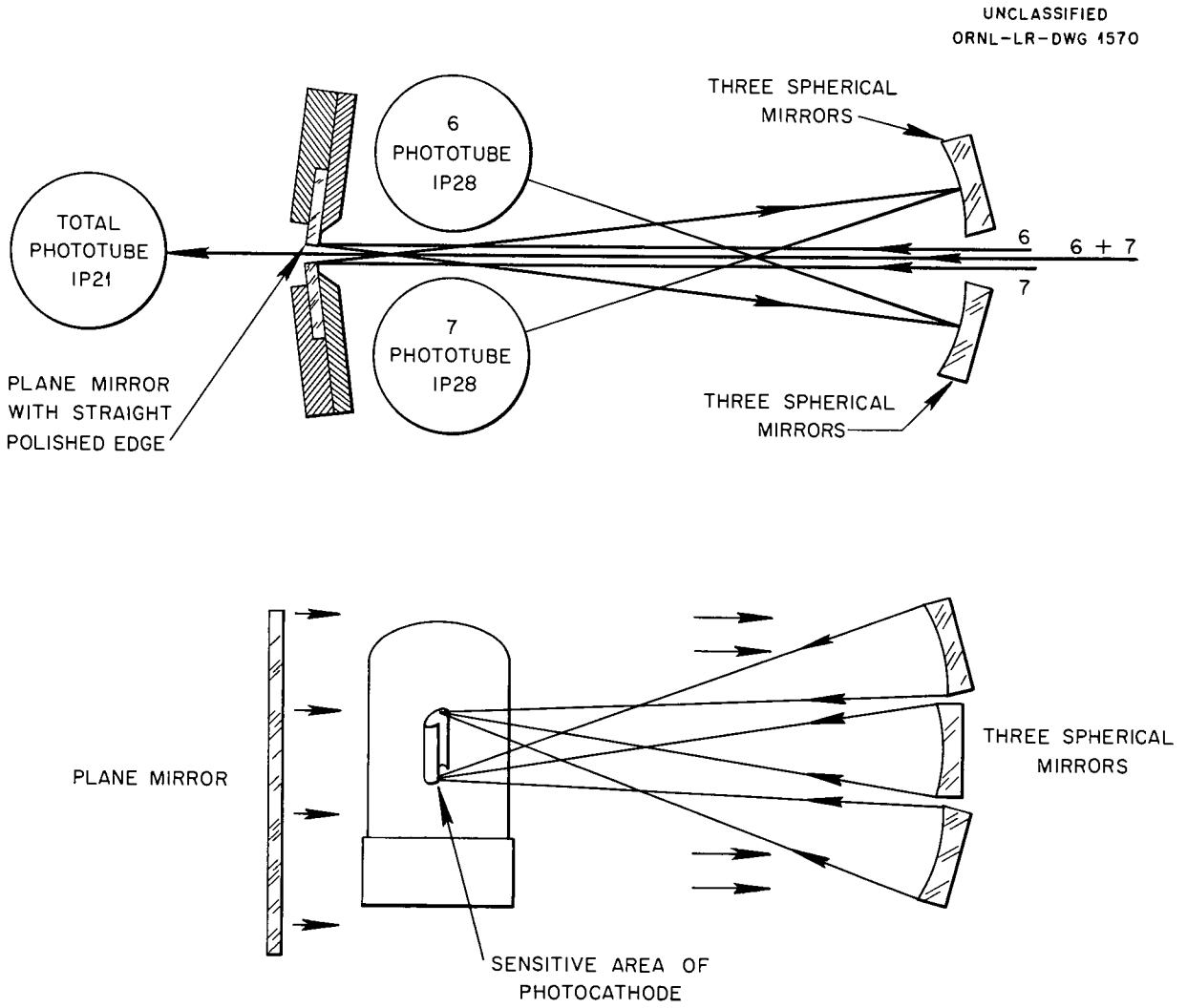

Fig 2 Beam Splitter and Image Dissector for Echelle Spectrograph (*a*) End view (*b*) Side view

Project OS 2 – Spectroisotopic Investigations

D D Smith S J Ovenshine

Of the two isotopes of boron (B^{10}, 19 57%, and B^{11}, 80 43%) B^{10} with its large (n,α) cross section of 3990 barns is extremely important in nuclear physics It is thus desirable to investigate the feasibility of assaying boron by routine spectro isotopic analysis Such an analysis would be dependent upon the existence of adequate isotopic shifts in suitable spectrum lines

Vibrational bands of the BO molecule have been observed at numerous laboratories Jenkins and McKellar[11] determined the isotopic mass coefficient $\rho = \sqrt{\mu/\mu'}$ to be 1 02908 ± 0 00003 from data on the $^2\Sigma$ state Mulliken[12] observed the 2 6 band of $B^{11}O$ at 2892 A to be separated by 20 0 A from that of $B^{10}O$ (2912 A) Atomic isotope shifts were used by Mrozowski[13] to ascertain the natural abundances of the two isotopes He observed shifts in the B II 3451 A line of 0 877 ± 0 004 cm^{-1} (0 104 A) and in the B I 2498 A line of 0 37 cm^{-1} (0 044 A) Ornstein and Vreeswijk[14] observed a

[11] F A Jenkins and A McKellar *Phys Rev* **42**, 464 (1932)

[12] R S Mulliken *Phys Rev* **25** 259 (1925)

[13] S Mrozowski *Z Physik* **112** 223 (1939)

[14] L S Ornstein and J A Vreeswijk Jr *Z Physik* **80** 57 (1933)

shift of 0.054 A for the $^2P_{3/2}$-$^2S_{1/2}$ 2498 line and a doublet splitting of 0.955 A.

Spectra of separated isotopes of boron have been studied by using hollow-cathode excitation of the 3451 line. Pulsed d-c or a-c excitation of this ionic line gives more-intense spectra than does the conventional d-c excitation. Measurements showed the line separation to be 0.101 ± 0.004 A with B^{10} at longer wavelength. Shown in Fig. 3 is the isotope shift as observed with a 21-ft Paschen-mount spectrograph used in second order with source excitation of 250-ma dc. Compounds studied include boric acid, potassium borate, and boric oxide. Excitation of the gas BF_3 should be an ideal approach to the source problem.

Project OS-3 – Photodetector Investigations

O. B. Rudolph

Tests have been run on 12 different types of phototubes for signal and dark-current characteristics for reference in selecting tubes for direct-reader use. Figure 4 illustrates the performance of 10 tubes with which a Gaertner Model 291 spectrometer was used as a monochromator. These data are pertinent to the particular tubes tested, but they should not be construed as a basis for choosing or condemning any particular type or make. Although the graphs indicate a general trend, individual tests must be made on each tube to evaluate it properly. There are other parameters which may be of comparable importance in determining phototube worth, such as signal-to-noise ratio, fatigue effects, and tube orientation.

Each tube was adjusted to the beam axis so as to find the most sensitive photocathode line element before readings were taken. Due precautions were taken to assure a constant-intensity light source by operating the tungsten lamp from a regulated a-c voltage supply. Constant d-c voltage for the phototubes is assured by a specially designed voltage-regulated power supply. Continuously selectable voltages in the range from 600 to 2000 v are obtainable and held constant even though the input voltage may vary from 100 to 135 v ac. This electronically regulated output has a very low ripple component of not more than 0.02%. The circuit diagram is shown in Fig. 5.

Project OS-6 – Hyperfine-Structure Studies of U^{233} and U^{235}

K. L. Vander Sluis

Improved interferograms of uranium hyperfine structure have been obtained by using electrodeless discharge excitation of UCl_4 (see Fig. 6) and by applying the theory of the finite aperture effects in the Fabry-Perot interferometer. Vycor discharge

Fig. 3. Isotope Shift in the 3451 A Line of Calutron-Separated Boron.

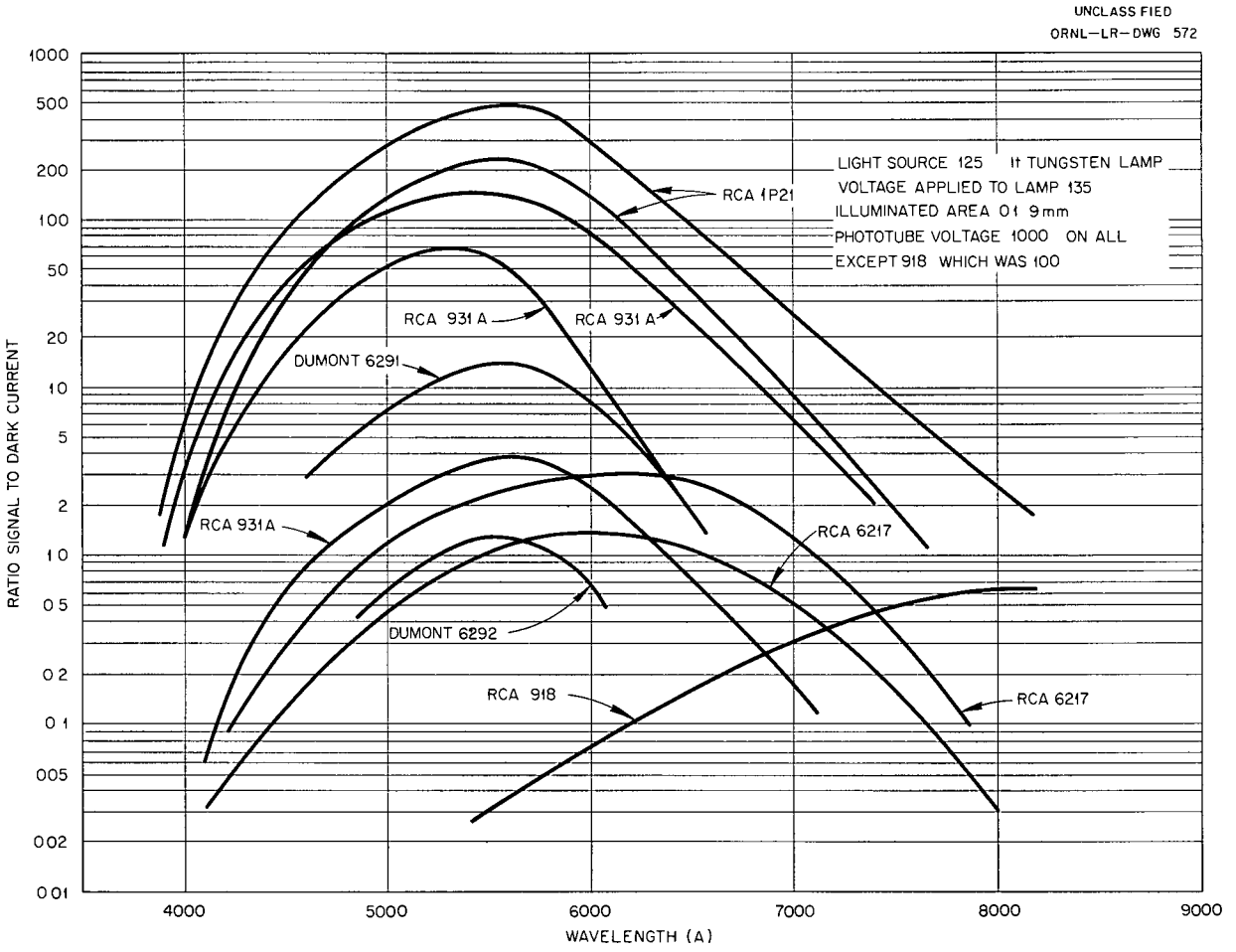

Fig 4 Chromatic Sensitivity and Dark Current Performance of Various Tube Types

tubes have been used in place of quartz which is permeable to hydrogen when heated Spectrum line intensity has been increased by almost three orders of magnitude by these developments and lines previously not available for careful study because of interferometer drift have proved to be very useful

More than 125 hyperfine structure patterns of the neutral uranium atom U I in the region 5000 to 8800 A have been investigated Of these 125 patterns three patterns showed seven components in U^{235} (see Fig 7) λ 7918 79 (f^3ds^2) $^5K^0_6$ 169_7 λ 7991 30 (f^3d^2s) $^7M^0_6$ 187_6 and λ 6464 97 $(f^3ds^2?)$ B^0_7 227_8 The possibility of line interferences was negligible for 6465 A and isotopic interferences were minimized by using a 99 95% pure U^{235} sample The microphotometer tracing for 6465 A was translated into an intensity vs wave number curve The relative intensity of the individual components was determined by cutting out card board replicas of the lines weighing and normalizing the total energy to the theoretical intensity tables such as those of White and Eliason [15] In Table 5 are summarized the observed values with those expected if I is $7/2$ or $9/2$ The value $5/2$ is incompatible with patterns having more than six major hyperfine components That $I = 7/2$ is correct is substantiated by remeasurement of the quadrupole perturbed pattern of λ 5915 A with results which definitely exclude $I = 9/2$ although the data on this line are insufficiently precise to distinguish uniquely between $5/2$ and $7/2$

[15] H E White and A Y Eliason *Phys Rev* **44** 753 (1933)

UNCLASSIFIED
ORNL LR DWG 1573

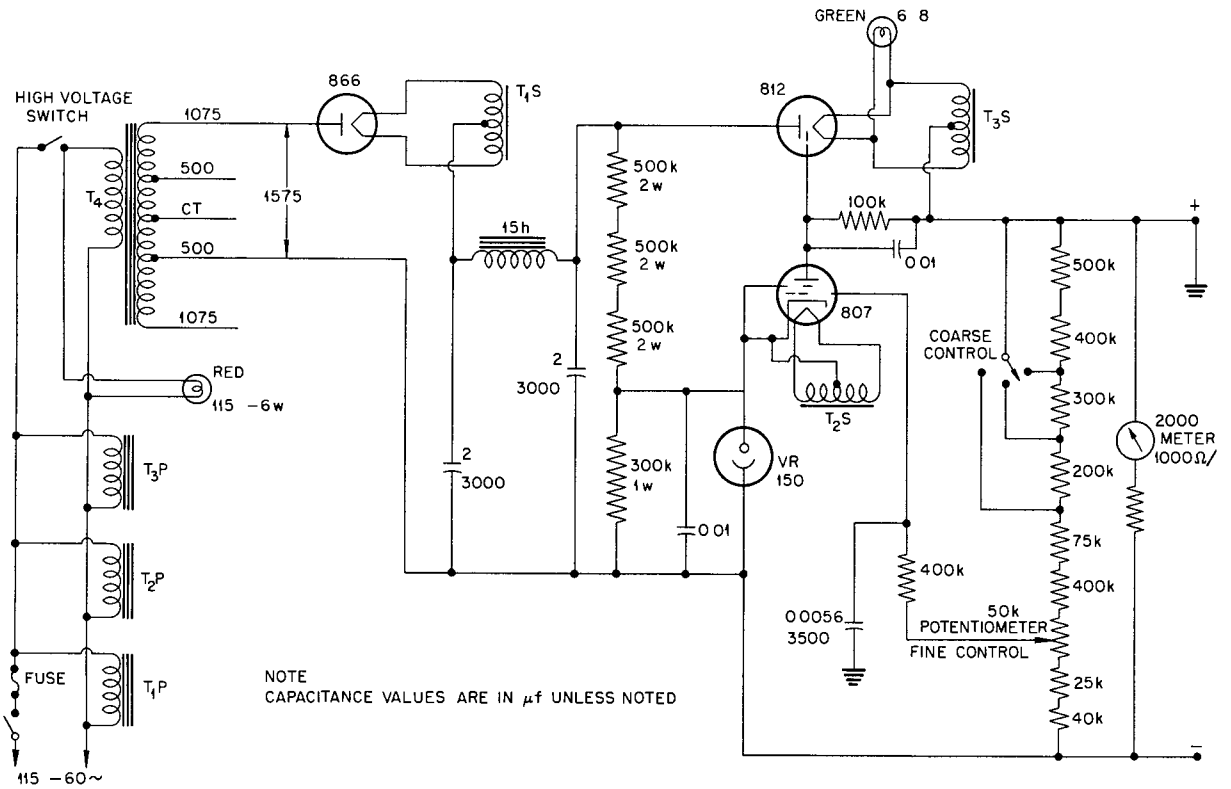

Fig 5 Regulated Phototube Power Supply 600 to 2000 v dc Ripple < 0 02%

The complexity of the electron configuration and perturbation in neutral uranium make it too uncertain to recalculate the nuclear magnetic moment or quadrupole moment on this basis of $I = 7/2$ Re interpretation of the data for the singly ionized atom will be carried out in the future

Project OS-7 – Zeeman Spectroscopy

P M Griffin

Zeeman effects of plutonium have been observed at a field strength of 25 000 oersteds by use of an Echelle spectrograph Magnetic resolution of the order of 0 05 g units has been obtained More than 300 Zeeman patterns show well resolved structures in the wavelength range 2500 to 6900 A The great majority of patterns appears to be due to the singly ionized plutonium atom

Many intense patterns reveal low J quantum num bers $1/2$ $3/2$ and $5/2$ in contrast to the high quantum numbers involved in the other second rare earth elements At least 90 patterns involve $J = 1/2$ Preliminary analysis of about 10 patterns indicates one common level of $J = 1/2$ and $g = 0\ 30$ in 6 of the 10 patterns This level is tentatively assigned to $5f^6 7s\,(^6F_{1/2})$ for which the theoretical LS g factor is $-0\ 667$ and hence may be seriously perturbed by $^8F_{1/2}$ or $J = 1/2$ levels from $5f^6 6d$ It appears probable that the $6d$ electron may be relatively less tightly bound in plutonium than in uranium

TABLE 5 OBSERVED AND THEORETICAL RELATIVE INTENSITIES IN U^{235} LINE AT 6465 A

CONDITIONS	COMPONENT INTENSITY						
	a	b	c	d	e	f	g
Observed	201	101	75	66	49	44	35
$I = 7/2$	191	82	74	67	60	52	43
$I = 9/2$	330	57	49	42	36	30	26

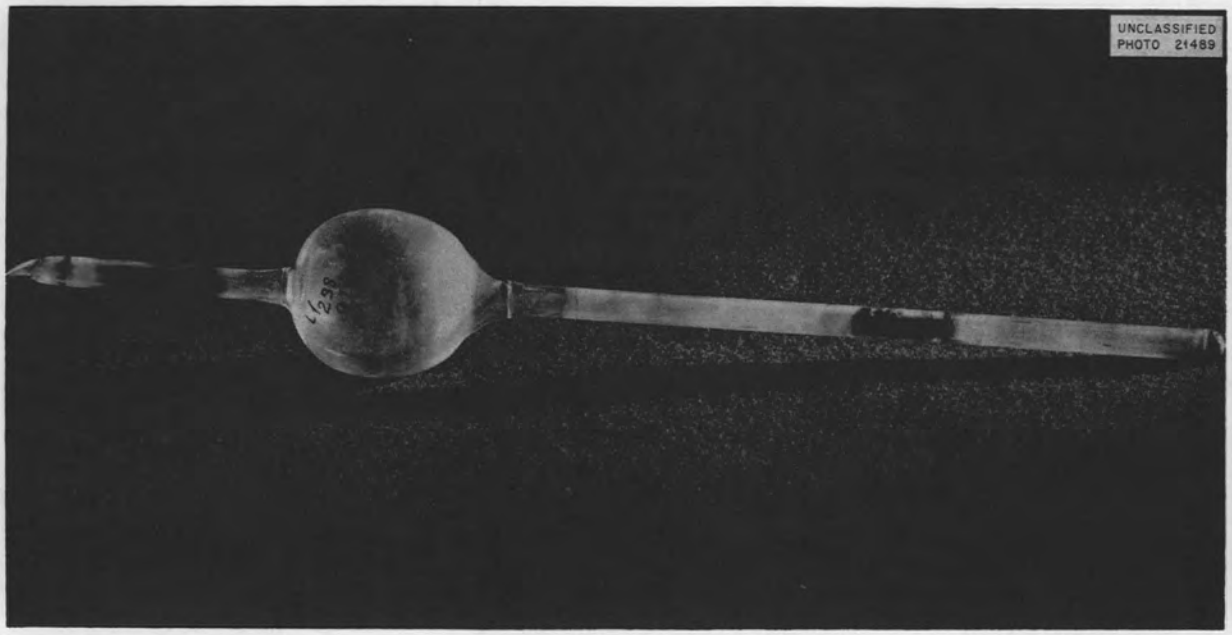

Fig. 6. Electrodeless Discharge Tube Containing $U^{238}Cl_4$. Excitation of long tube section at base is by 2450-Mc Raytheon diatherm unit.

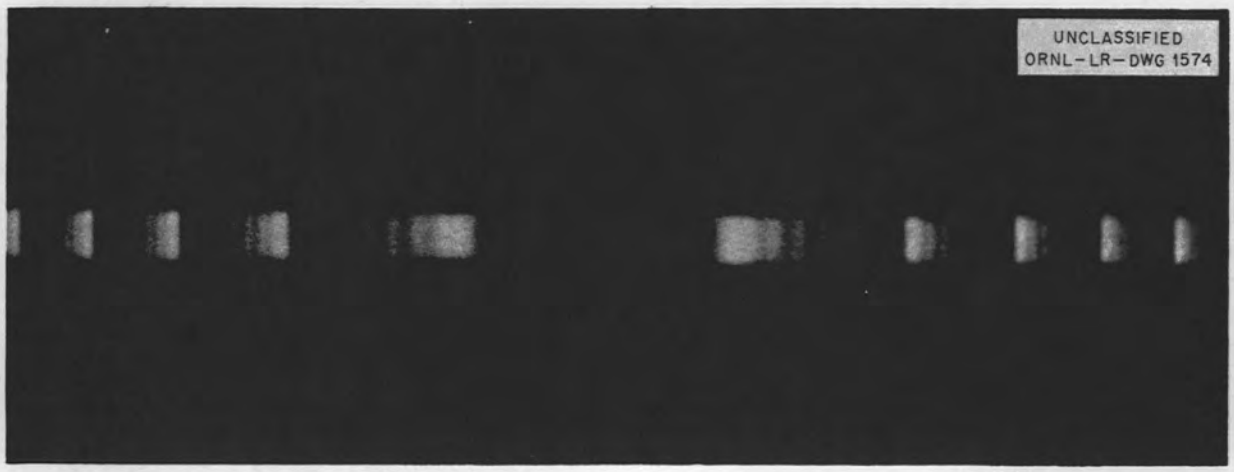

Fig. 7. Seven-Component Fabry-Perot Pattern Due to Hyperfine Structure in the 6465 A Line of U^{235}.

Extensive work on the analysis of the vast amount of data on the plates is awaiting the completion of a coordinate comparator which is being designed especially for the reduction of two-dimensional spectrograms obtained with the Echelle-Littrow spectrograph. Illustrated in Fig. 8 is a narrow spectrum region showing details of the Zeeman splittings.

Project OS-8 – Theory of the Aperture-Limited Fabry-Perot Interferometer

K. L. Vander Sluis

In keeping with the goal of high-resolution spectroscopy, a thorough investigation of the Fabry-Perot interferometer is in progress. This investigation includes a study of the effect of finite aperture

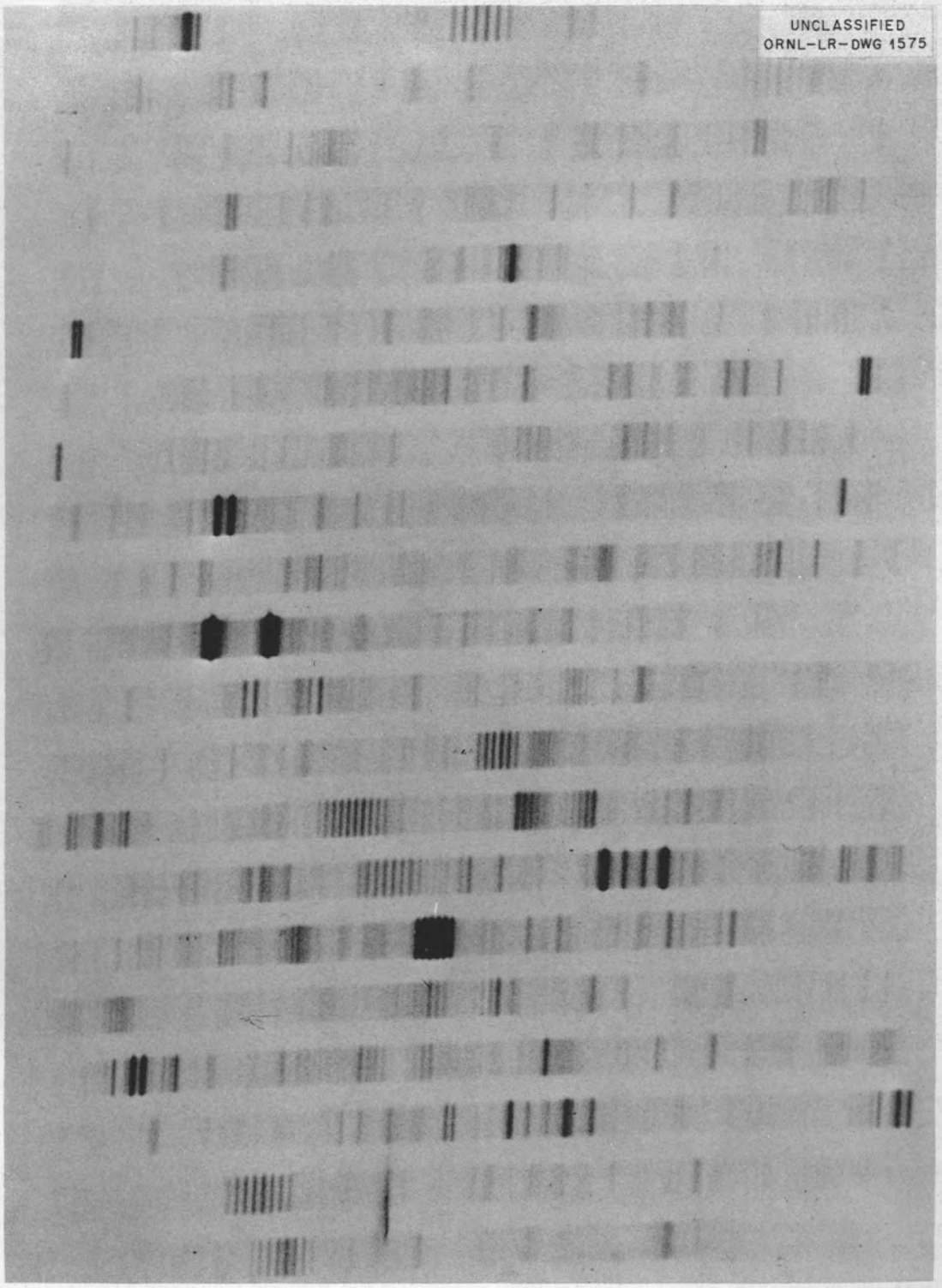

Fig. 8. First Zeeman Effects of a Transuranic Element, Plutonium, Observed at 25,000 Oersteds with Echelle Spectrograph. Wavelength region is 4449 to 4631 A.

both for noncoherent illumination[1] and for coherent illumination Also to be included will be a study of the effect of maladjustment of the interferometer

The case of the interferometer used in the parallel beam requires the assumption of coherent wave fronts or possibly a blend of coherent and non coherent radiation that results from the finite size of the source The method employing the assump tion of coherent radiation has been worked out approximately by Geiger [16] However it was found that a closed expression could be obtained for the general case without making the approximation used in Geiger s work To compare Geiger s result with that obtained without approximation the value of the fringe maxima in each case is compared

Geiger s approximate method yields

$$(1) \quad I_m = I_0 \left[1 - \frac{R}{2k(1-R)}\right]^2 \quad \text{for } k \geqq 50$$

whereas the exact treatment gives

$$(2) \quad I_{max} = I_0 \left[1 - \frac{R}{k(1-R)}\right]^2 \quad \text{for } k \geqq 50$$

Thus in the coherent case the approximation made by Geiger introduces a significant error in the fringe intensity maximum For example with k = 50 and R = 0 9 the maximum intensity predicted by Geiger s approximate method is 23% higher than the exact approach This coherent treatment may also be compared with the noncoherent case[1] which gives

$$(3) \quad I_{m\ x} \text{ (noncoherent)} = I_0 \left[1 - \frac{1+2R}{k(1-R^2)}\right] \quad \text{for } k \geqq 50$$

For k = 50 and R = 0 9 this gives a coefficient of 0 706 which compares with 0 824 for Eq 1 and 0 672 for Eq 2

In addition the general closed expression has been obtained for the intensity for the matched aperture case

$$(4) \quad I = I_n \left\{ 1 - \frac{I_n}{k(1-R)^2} \left[2R \cos\delta - 2R^{k+1} \cos(k+1)\delta + 2R^2 - 2R^{k+2} \cos k\delta\right] + \frac{I_n}{k^2(1-R)^2} \left(R^2 + R^{2k+2} - 2R^{k+2} \cos k\delta\right) \right\}$$

where I_n is the intensity distribution for the infinite interferometer R is the reflectivity of the films δ is the phase difference between successively re flected wave fronts and k is the number of reflec tions a ray could make in a distance equal to the aperture of the interferometer

The case of the maladjusted interferometer has thus far been expressed in a complex series how ever it has not been possible to find a closed expression for the series In the event of no closed form it will still be possible to calculate repre sentative situations through the use of the ORACLE

Project OS-9 – Simple Hollow Cathode Source for Spectrochemical and Spectroisotopic Analysis

D D Smith S J Ovenshine
O B Rudolph

Recently several new designs of hollow cathode sources have been reported [17 20] These designs have certain disadvantages for spectrochemical or spectroisotopic applications particularly in the unnecessarily long sample loading time and the complexity of the gas purification system An extremely simple source has been developed in this laboratory and it has been found to permit sampling at rates that are comparable to electrode changing rates in conventional spectrochemical arc stands By bleeding ordinary tank helium into the source which is being continuously pumped by a vacuum pump the need for a complex gas circulating system to provide the necessary gas flow and re duced pressure in the source is obviated Band lines due to gas contamination sample baking out processes or even small leaks are extremely weak

The simplified hollow cathode source is shown in Fig 9 Microscope cover slides (costing ap proximately 0 5¢ each) are used for windows and

[16] F E Geiger *J Opt Soc Amer* 39 249 (1949)

[17] L E Birks Atomic Energy Research Establ sh ment Document C/R 601 (1950) also *Repo t of the Group for the Advancement of Methods of Spectrographic Analys s for June 1951* Labo atorie Central de L arme ment 1 Place Saint Thomas Aqu nas Paris 7

[18] K B Newbound a d F H F sh *Can J Phys* 29 357 (1951)

[19] N E Gordon and H D Cook *Spectroch m Acta* V 505 (1953)

[20] H Schuler and A M chels *Spectrochim Acta* V 322 (1952)

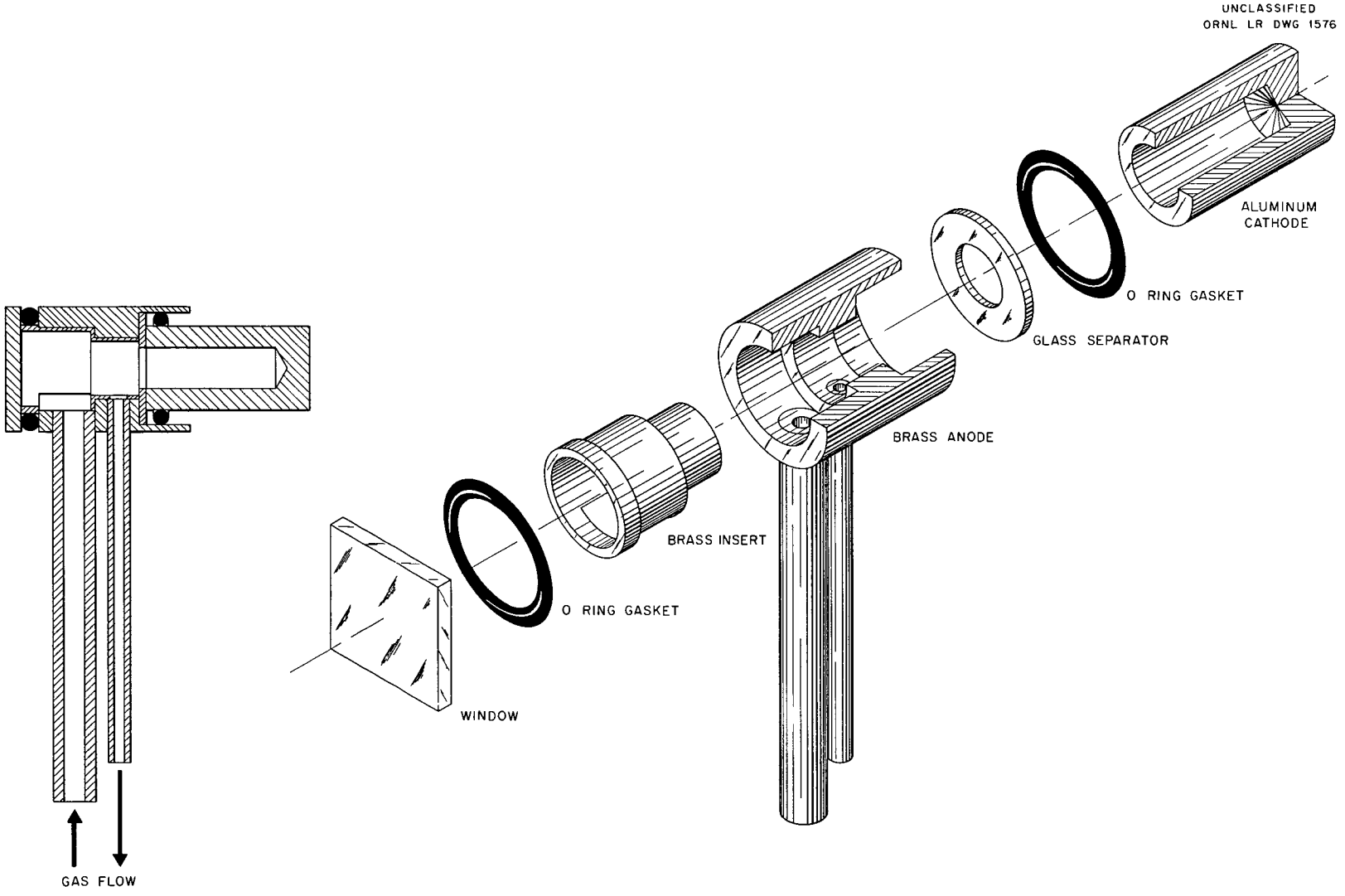

Fig 9 Cross Section and Exploded View of Hollow Cathode Source

can be subsequently discarded Silastex O ring gaskets[21] (costing about 60¢ each) are readily cleaned and can be reused almost indefinitely The brass anode and the brass insert which acts as a gas director require extremely low replace ment rates in fact the anode can be clamped securely on the optic axis of the spectrograph to ensure proper and reproducible source alignment for a complete series of investigations Glass separators of 1 mm thickness which control the anode cathode spacing (fabricated at a cost of ap proximately $1 00) can be used about 100 times on the average

The $1\frac{1}{4}$ in long aluminum cathode can be made from standard $\frac{1}{2}$ in aluminum rod that is machined down to 0 499 in for a fine finish is drilled 1 in deep with a No 2 drill and that has the edges chamfered slightly Electrode costs are comparable with or cheaper than those of the high purity graphite electrodes used in spectrochemical analysis

Sources are operated at 4 mm helium pressure the pressure being controlled by a leak valve re adjustment is required only a few times a day

Optimum operation of the hollow cathode light source is obtained by selecting and maintaining the proper excitation current Since the internal resistance of the hollow cathode source may change spasmodically especially at startup it is necessary to compensate for these changes rapidly and auto matically in order to maintain steady excitation conditions To meet these requirements a current regulated power supply was developed (see Fig 10) The power supply was designed to use a minimum of component parts and space consistent with the operating requirements The output current range is 10 to 140 ma voltage on open circuit is 760 v but the voltage drop across the source is only about 300 v during operation The desired current value is selected manually through R_6 with the load connected and it is maintained to within ±0 5 ma of this setting automatically during normal operation The sensitivity control R_5 is adjusted ex perimentally to the highest resistance value pos sible without causing instability or tendency to oscillate

For currents up to 100 ma it is necessary to cool only the cathode For higher currents anode cool ing is also required and is accomplished by water flowing through a few turns of copper tubing soldered onto the anode A simple water cooled cathode clamp which permits rapid cathode changing is shown in Fig 11

Project OS 10 – Configuration and Level Corrections for Aluminum II Silicon III and Gallium II

J R McNally O C Yonts

Spectrographic studies of the spectra of Si III prompted an inquiry into the status of the low $3p^2(^1D_2)$ level and subsequently into the iso electronic sequence Mg I Al II Si III etc The following changes in *Atomic Energy Levels*[22] are recommended

Al II	$3p^2(^1D_2)$	85 479 0	to	$3s3d(^1D_2)$	85 479
	$3s3d(^1D_2)$	110 087 5	to	$3p^2(^1D_2)$	110 087 5
S III	$3s3d(^1D_2)$	12 213 0	to	$3p^2(^1D_2)$	137 156 0
	$3p^2(^1D_2)$	121 946	to	$3s3d(^1D_2)$	121 946

Figure 12 illustrates how well these revisions fit into a quasi energy plot for the isoelectronic series Mg I through P IV Inversion of the ^1D levels of $3s3d$ and $3s4d$ are correlated to the relative posi tion of the $3p^2(^1D)$ level The p^2 splitting on this view is also in better accord with other p^2 se quences (e g C I N II O III) [23] The perturbing $p^2(^1D)$ term discussed by Shenstone and Russell[24] thus becomes reversed in designation Analogous perturbing effects occur in the isoelectronic series beginning with Ca I and Zn I It is further sug gested that the $4s5d(^1D_2)$ level of Ga II at 127 190 cm^{-1} is probably $4p^2(^1D_2)$ and that for subsequent nd electrons n be reduced by unity

SPECTROCHEMISTRY

Project SC 1 – General Spectrochemical Analysis

M R Skidmore E L Grove[25]
J A Norris

The semiquantitative determination of corrosion impurities in ANP fuel has been carried out by using regular graphite based standards to which

[21] Man fa tured by Linea I c Philadelphi Pa also Goshen Rubber Compa y Inc Goshe Ind

[22] C E Moore *Atomic Ene gy Levels* NBS Circular 467 (1949)

[23] E U Condon and G H Shortley *Theory of Atomic Spect a* Cambr dge Un vers ty P es New Yo k 1935

[24] A G Shenstone and H N Russell *Phys Rev* 39 415 (1932)

[25] Re ea h Part c pant Un vers ty of Alabama Uni vers ty Ala

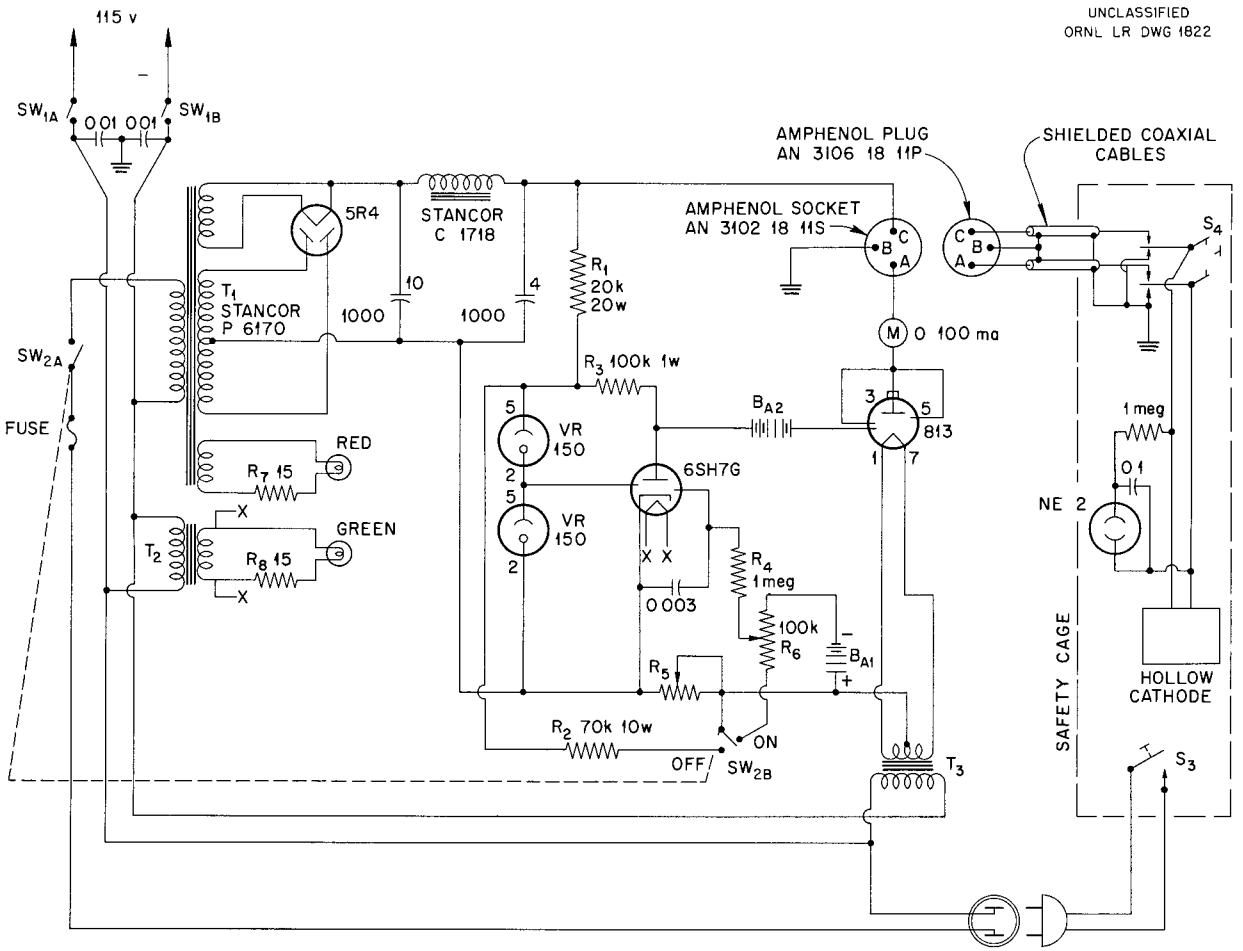

NOTE CAPACITANCE VALUES ARE IN μf UNLESS NOTED RESISTANCE VALUES ARE IN OHMS UNLESS NOTED

1 T_2 115/6 3 v 1 amp
2 T_3 115/10 5 mp
3 R_5 250 Ω 25 w POTENTIOMETER SENSITIVITY CONTROL MOUNTED ON CHASSIS SCREWDRIVER ADJUSTMENT
4 R_6 1 w POTENTIOMETER ON PANEL CURRENT SELECTOR
5 B_{A1} 22 5
6 B_{A2} 135 6 NO 505E EVEREADY INSULATED FROM CHASSIS 1000 v
7 SW_2 A & B 2 POSITION SELECTOR SWITCH ON PANEL OFF–ON GANGED
8 D C CIRCUIT INSULATED FROM CHASSIS 1000 v

Fig 10 Current Regulated d c Power Supply for Hollow Cathode Source

was added fresh fuel mixture This permits routine analysis to be carried out on 1 mg of fuel with the limit of detection of the elements of interest being in general 0 1% or less

A total of 487 samples has been run during this period

Project SC 2 – Analysis of Stainless Steels

Z Combs J A Norris

A new rapid procedure has been established which permits quantitative determination of the major and minor constituents of stainless steel by using as little as 1 mg of sample

In this method 1 mg samples of steel filings are added to 9 mg of graphite and the mixtures are burned to completion by using an a c arc at 5 amp and 2500 v Selected spectrum lines are densitometered and calculations are made based on the method of Couliette[26] as modified by Kennedy [27] Precision of the method is ±10%

[26] J H Couliette *Ind Eng Chem Anal Ed* 15 732 (1943)

[27] W R Kennedy American Cast Iron Pipe Co Birmingham Ala private communication 1953

UNCLASSIFIED
ORNL-LR-DWG 1577

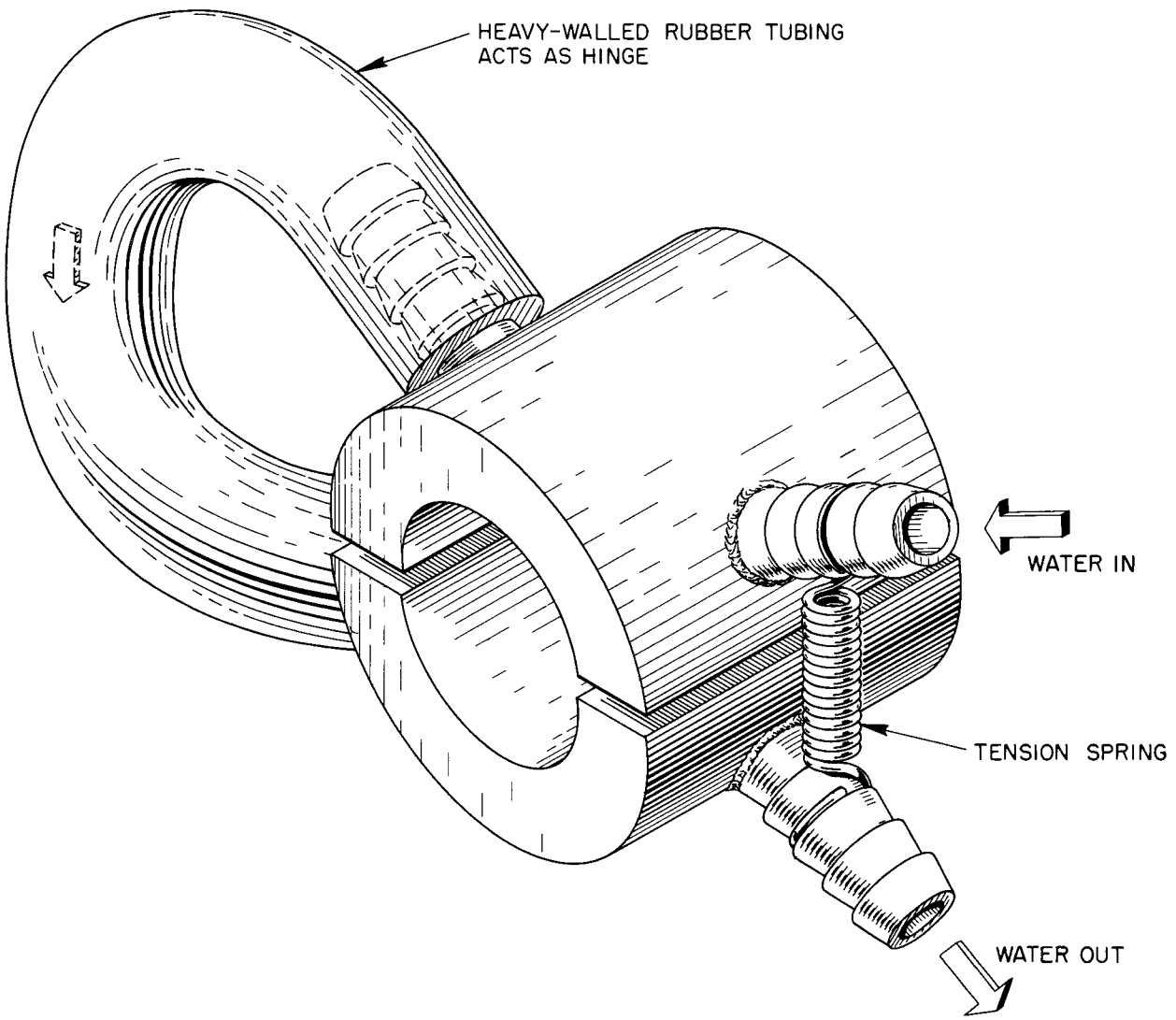

Fig 11 Water Cooled Clamp for Hollow Cathode

Project SC 3 – Rare Earth Mixtures

J J Mundzak

No major changes have been made in the previously established procedure A total of 1750 quantitative determinations has been made on 171 rare earth mixtures products of the research and production program in rare earths by the Isotope Chemistry Section of this Division

Project SC 4 – Electronic Spectrochemistry

J A Norris O B Rudolph
G K Werner S J Ovenshine

The 21 ft Paschen mounted grating spectrograph is being converted to photoelectric recording for rapid and precise quantitative spectrochemical analyses Problems to which this instrument will be applied are (1) analysis of ThO_2 slurries for

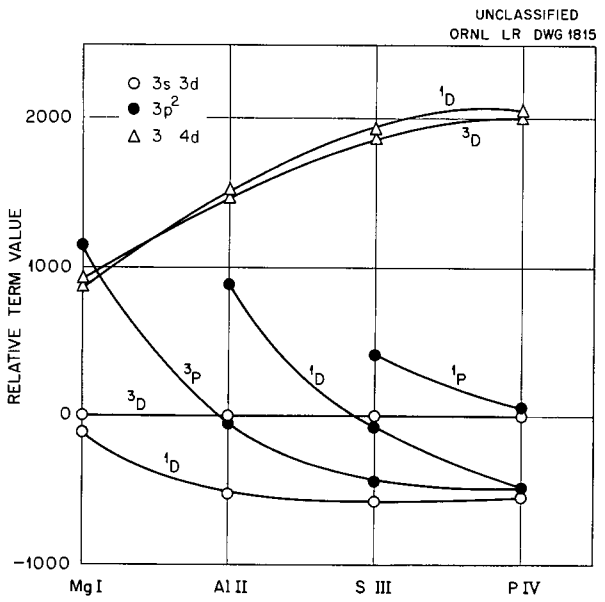

Fig 12 Quasi Energy Plot for Mg I Isoelectric Sequence Plotted vertically are the term values relative to the ^3D center of gravity by the ionization potential for each atomic stage

corrosion products (Fe Cr Ni Ti Zr W etc) (2) analysis or identification of stainless steels and other materials of reactor construction (3) analyses of rare earth mixtures (4) purity studies of cyclotron irradiation materials and (5) other special problems where time is an essential factor It is anticipated that routine analyses of all reactor components and cyclotron target materials can result in considerable monetary savings to the Laboratory

Designs involving exit slit–phototube assemblies a cylindrical lens for producing stigmatic lines and other components are in the development stage

X RAYS

Project X 1 – Chemical Analysis by X Ray Absorption and Fluorescence

W F Peed H W Dunn

Equipment for monochromatic x ray absorption analysis of uranium[28] has been installed in the Y 12 Production Plant Numerous recommendations on instrument design have been made and consultation on problems relating to operation has been conducted during the report period At the present time the equipment is operating very satisfactorily samples are being analyzed at the anticipated high rate and the uncertainty of less than 0 5% of the amount of uranium present has been substantiated for the recommended working range X ray results when compared to chemical results show no significant bias

Analysis of stainless steel corrosion films by direct fluorescent excitation with the G-E XRD 3 unit was found to be impractical because of the extremely low intensity available from samples weighing several hundred micrograms Other methods of x ray analysis applicable to this problem are being considered

The chief activity in the field of x ray fluorescence analysis has been the study of the rare earth elements Intensity ratios between the rare earth L lines and the chromium $K\alpha$ line have been obtained for various concentrations and a tentative curve has been drawn This curve contains anomalies between erbium and thulium and in the dysprosium line The absorption edge of iron present to about 3% in the mica crystal is between the $L\alpha$ line of erbium and of thulium The discrepancies in the dysprosium line are believed to result from photoionization of the dysprosium L_{III} level by the terbium $L\gamma_1$ line The dysprosium sample contained about 4% terbium

In order to investigate these quenching and enhancement effects 10% of various fourth period impurities were introduced into a standard matrix of nickel and zirconium Several absorption effects are in operation on each sample Both quanta absorption and the photoionization by nickel $K\alpha$ radiation by the different constituents in the sample will tend to lower the Ni/Zr ratio The absorption by nickel of radiation shorter than that of the nickel K absorption edge will increase the ratio It was anticipated that the break would occur between copper and zinc where copper $K\alpha$ will not excite the nickel $K\alpha$ spectrum but zinc will This effect was observed experimentally as 10% of added zinc caused the Ni/Zn ratio to increase about 9% however the 10% added copper also caused about 2% increase in the Ni/Zr ratio and this is presumed to be due to the copper $K\beta$ radiation exciting the nickel K spectrum (The intensity of the $K\beta_1$ radiation is about $\frac{1}{5}$ that of the $K\alpha_1$ ra

[28] W F Peed and H W Dunn *Preliminary Investigation of Monochromatic X ray Absorption as a Method of Analys s for U anium* ORNL 1265 (April 8 1952)

diation) Cobalt had no appreciable effect on the Ni/Zr ratio Gallium and germanium had approximately the same effect as zinc but with iron the Ni/Zr ratio was reduced by about 14% The iron absorption edge falls between the cobalt and iron *K* lines Since the nickel $K\alpha$ radiation has a shorter wavelength than the iron *K* absorption edge it is absorbed by the iron thus causing the lower ratio Additional work is in progress to determine the effect of other elements farther removed in the periodic table These investigations indicate the extreme complexity of fluorescent x ray analysis of rare earths It appears to be doubtful that good quantitative results can be obtained by x ray fluorescence analysis of complex mixtures of such close lying elements unless important second order corrections are introduced

Project X 2 – X Ray Diffraction Analysis

H W Dunn

Work is continuing on the tabulation of x ray diffraction data for compounds studied in this laboratory and for which no x ray diffraction data are available either in the classified literature or in published reports X ray diffraction data on two such compounds are given in Tables 6 and 7 Both samples are known to be chemically pure The cut off was at about 20 and 0 733 A

Project X 3 – Hyperfine Structure in Uranium Isotopes

W F Peed

Recent investigations[29] undertaken at the suggestion of members of this laboratory showed no isotope effects in spectral lines from the uranium L_{III} state A joint research program between ORNL and Florida State University involving the use of their precision double crystal equipment is being initiated to investigate isotope effects in the weaker uranium L_I level transitions where the effect should be more pronounced

Methods of preparation of milligram quantities of U_3O_8 in a pelletized form which can be loaded in the x ray equipment that belongs to Florida State University have been developed and a sample of normal U_3O_8 has been sent for preliminary examination Results show that the desired transition (M_{III}–L_I) is observable with sufficient intensity but that modification of sample shape is desirable These modifications will be made and further preliminary investigation will be conducted pending completion of the research on U^{233} U^{235} and U^{238}

PUBLICATIONS

Reports and papers in preparation or submitted for publication

1 K L Vander Sluis and J R McNally Jr *Fabry Perot Interferometer with Finite Apertures*
2 H W Morgan and J H Goldstein *The Microwave Spectrum and Molecular Structure of Vinyl Fluoride*
3 H E Walchli *A Table of Nuclear Moment Data Supplement No 2*
4 O C Yonts W A Bell and L O Love *Preliminary Report on Filament Activation with Gadolinium*
5 O C Yonts *Filament Life in Low Pressure Arc Type Ion Source*
6 D D Smith S J Ovenshine and O B Rudolph *A Simple Hollow Cathode Source for Spectrochemical and Spectro-Isotopic Analysis*
7 J R McNally Jr *Source Requirements and Applications for High Resolution Spectroscopy*
8 H W Morgan P A Staats and J H Goldstein *The Infrared Spectra of Formyl Fluoride and Deuterated Formyl Fluoride*
9 H W Dunn *Analysis of the Rare Earths by X Ray Fluorescence*
10 H W Morgan and J G Goldstein Second Order Quadrupole Effects in Asymmetric Tops The Microwave Spectrum of Vinyl Iodide to be published in the July issue of *The Journal of Chemical Physics*
11 P M Griffin *Zeeman Effects in the Spectra of Plutonium*

[29] G L Rogosa and G Schwartz *Phys Rev* 92 1434 (1953)

TABLE 6 X RAY DIFFRACTION DATA ON $UO_2HPO_4\ 4H_2O$

INTENSITY	SPACING *d* (A)	INTENSITY	SPACING *d* (A)	INTENSITY	SPACING *d* (A)
100	8 59	20	1 393	20	0 963
60	5 39	20	1 378	5	0 954
60	4 90	50	1 368	20	0 948
50	4 27	20	1 352	5	0 943
90	3 68	10	1 338	20	0 937
80	3 47	30	1 329	20	0 934
90	3 40	25	1 313	25	0 930
5	3 05	10	1 282	10	0 925
50	2 93	20	1 268	20	0 917
20	2 71	35	1 258	20	0 911
45	2 67	25	1 242	30	0 900
45	2 53	25	1 233	5	0 885
5	2 49	20	1 222	5	0 879
40	2 46	25	1 213	20	0 876
50	2 36	35	1 197	3	0 871
30	2 24	30	1 185	5	0 867
50	2 20	20	1 176	10	0 862
10	2 17	35	1 163	40	0 860
50	2 13	35	1 159	10	0 855
10	2 08	5	1 154	30	0 850
50	2 05	10	1 138	35	0 847
30	1 990	20	1 110	25	0 845
35	1 884	20	1 105	20	0 843
20	1 846	20	1 096	10	0 835
35	1 813	35	1 078	30	0 831
20	1 781	25	1 068	20	0 824
40	1 766	20	1 057	20	0 821
30	1 741	35	1 049	30	0 818
30	1 707	5	1 034	5	0 815
10	1 657	5	1 030	35	0 812
40	1 642	5	1 027	10	0 809
40	1 610	10	1 022	20	0 807
10	1 589	10	1 013	20	0 806
25	1 574	5	1 009	25	0 804
40	1 559	5	1 005	20	0 800
35	1 550	10	0 998	20	0 792
35	1 535	35	0 988	25	0 788
25	1 462	25	0 981	30	0 781
20	1 446	5	0 973	25	0 778
25	1 422	30	0 969	30	0 776

Obt ned w th nickel filte ed copper rad at on Intens t es a e v sual est mates uncorrected for absorpt on

TABLE 7 X RAY DIFFRACTION DATA ON $UO_2(H_2PO_4)_2\ 3H_2O$

INTENSITY	SPACING *d* (A)	INTENSITY	SPACING *d* (A)	INTENSITY	SPACING *d* (A)
50	8 33	60	2 31	3	1 463
50	6 95	60	2 26	10	1 450
100	6 16	50	2 18	10	1 429
20	5 21	50	2 12	5	1 411
70	4 97	5	2 09	5	1 392
70	4 23	3	2 07	5	1 377
60	4 01	3	2 04	10	1 364
50	3 61	50	2 00	10	1 348
10	3 47	50	1 978	2	1 339
50	3 42	50	1 952	5	1 305
10	3 37	20	1 910	3	1 278
80	3 32	30	1 884	3	1 255
3	3 20	50	1 862	5	1 238
70	3 13	10	1 821	3	1 219
10	3 07	10	1 746	5	1 186
15	2 90	40	1 731	2	1 174
15	2 83	30	1 687	3	1 162
70	2 78	5	1 655	3	1 132
10	2 69	1	1 625	2	1 109
10	2 65	2	1 606	1	1 098
10	2 61	10	1 578	3	1 058
20	2 57	20	1 553	1	1 001
5	2 51	20	1 532	1	0 867
20	2 46	5	1 507	2	0 856
3	2 41	2	1 492		
2	2 36	2	1 475		

Obtained with nickel filtered copper radiation Intensities are v sual estimates uncorrected for absorption

MASS SPECTROMETER LABORATORY

Russell Baldock Department Head

INTRODUCTION

Iridium metal has been shown to be a very useful material for vaporizing solid materials in the ion source of a mass spectrometer Filaments made of 0 003 × 0 060 in iridium foil were spot welded to tantalum support legs and heated with currents of up to 12 amp An outstanding feature of the iridium filaments is that they can be heated to over 2000°C in air without oxidizing appreciably This makes it possible to sinter on only a few micrograms of metal or oxide which has been proved to be adequate for most analyses Techniques have been developed for placing more than one sample on a filament thus greatly reducing the instrument time required per sample A method has been developed for the efficient generation of positive ions of nickel from samples of only 1 μg The methodology of isotope dilution studies of aircraft fuels has been extended to include a measure of the loss of uranium due to corrosion A new 6 in radius all stainless steel mass spectrometer (MS C) has been placed in operation Design work has been completed on an improved 60 deg sector type of mass spectrometer

IRIDIUM SOURCE OVEN FILAMENTS

H M Rosenstock J R Sites

Some time ago it was found that tantalum oven filaments could not be used for the production of ions from nickel oxide by surface ionization The failure was ascribed to reduction of the oxide by the tantalum followed by alloying of the nickel with the filament material [1] Approximate thermodynamic calculations indicated that the reduction process was possible [2] and nickel tantalum eutectics are known to exist [3]

It was decided that iridium was one of the very few materials which had a favorable chemistry and high enough melting point to be suitable as a source oven for this material [2] Since then it has been found that tantalum as well as iridium could be used as a source oven for nickel oxide when electron impact ionization is used However experiments with iridium have indicated that it has a number of properties that make it a useful and versatile filament material Some of these properties are as follows

1 Chemical attack of the filament is virtually eliminated There are for example some 20 metal oxides capable of oxidizing tungsten tantalum or molybdenum None of these oxides will attack iridium [4] Similar difficulties might be encountered with other types of compounds as well However by using iridium filament burnout due to chemical reaction with compounds is avoided completely Furthermore the sample composition is unchanged which may be of importance in qualitative identification of the constituents of simple solid mixtures

2 The melting point of iridium (2727°K) is considerably higher than that of platinum (2047°K) so most commonly encountered substances can be vaporized rapidly enough for mass spectrometric analysis

3 The work function is not known however a variety of ions have been produced thermally This mode of ionization is very useful because it eliminates the hydrocarbon background peaks encountered in electron impact ionization The following thermal ions are readily produced Al Ca Ba Sr Cr Ir Ru Rh Fe Ni Na K Rb and Cs

4 Difficulties that result from alloying and ensuing filament burnout have been encountered with Ni Rh Ir and Pt on tantalum filaments Iridium on the other hand undoubtedly forms alloys but this has not interfered with the following assays Pt Pd Ru Rh and Ni

5 Iridium can be heated to about 2000°K in open air without burning out the filament This is very useful for loading samples by sintering them directly onto the filament thus avoiding the possible loss of sample material during handling Phase transitions accompanied by loss of water sulfur dioxide or carbon dioxide for example often lead to loss of sample as the result of spattering The transitions can be followed and controlled under a low power microscope and

[1] J R Sites H M Rosenstock and W R Rathkamp *Stable Isotope Research and Production Semiann Prog Rep Nov 20 1953* ORNL 1617 p 12

[2] H M Rosenstock memoranda of October 22 1953 and November 11 1953

[3] S L Hoyt *Metal Data* p 469 Reinhold New York 1952

[4] L Brewer *Chem Rev* 52 1 (1953)

spattering losses are minimized This technique makes possible complete analyses on only a few micrograms of most materials

RAPID SOLID SAMPLE ANALYSES

H M Rosenstock J R Sites
J R Walton

An appreciable fraction of the time required for an analysis is taken up in re establishing the vacuum in the mass spectrometer after the sample has been inserted Under favorable conditions about 2 hr is the total time required per analysis of which perhaps 1 hr is required for pumping down

A considerable decrease in time spent per sample has been achieved by loading several samples on one filament and then scanning their mass spectra successively The general requirements for this technique are

1 no overlapping of mass peaks
2 sufficient volatility differences so that all samples do not vaporize at the same oven filament temperature and
3 no chemical reaction leading to radical changes in the cracking pattern of any of the components

The samples are fused onto iridium filaments in the order of decreasing melting points and then they are examined in the order of decreasing volatility The following combinations have been successfully investigated Pt Pd Nd_2O_3 Pt Cr_2O_3 NiO Pt NiO AgCl Pt Pd Sm_2O_3 Pd and NiO

Still another technique has been developed for isotopic analyses of carbon By using Sauereisen cement elemental carbon is sintered onto the iridium filament and is subsequently vaporized for analysis This procedure completely eliminates the necessity of converting the carbon to carbon dioxide

ANALYSES OF POTASSIUM 40

C E Melton

Eight extremely small samples of K^{40} (20 to 50 μg) were analyzed in the mass spectrometer by special techniques The analysis was accomplished by fusing crystals of KCl to an iridium filament and subsequently heating the filament to produce thermal ions from the K^{40} Since iridium contains some normal potassium as an impurity extreme care had to be excercised to prevent it from introducing any error that would result from dilution of the sample

The filament was first placed in the spectrometer tube and baked for 3 hr at approximately 1600°C (13 amp) while the 39 40 and 41 mass positions were monitored The current was then gradually decreased until these masses disappeared This occurred at 8 5 amp for the particular filaments used After the filament had been allowed to cool to room temperature it was slowly reheated to determine the exact current setting at which the background potassium reappeared which was found to be 8 75 amp

As a preliminary check an enriched K^{39} isotopic sample of known composition (99 99%) was then placed on the filament for isotopic abundance analysis The results were found to be well within the experimental error thus confirming that there was no interference from natural potassium in the iridium

The K^{40} samples were then placed on a filament which had been pretreated as described above Data were taken on the samples at a current setting of 7 02 amp which was considerably below the current setting of 8 75 amp where background potassium would be expected to appear

NEW ISOTOPIC ABUNDANCES

J R Sites

In continuing the isotopic analyses of the separated isotopes of the platinum metals natural metals are first investigated to determine the required operating conditions In the course of this work new determinations of the isotopic abundances have been made Isotopic abundances of natural iridium have been found to be different from earlier published data [5] as shown in Table 8 The isotopic abundances of natural ruthenium have been found to be close to those reported by Ewald [6]

[5] M B Sampson and W Bleakney *Phys Rev* 50 732 (1936)
[6] H Ewald *Z Physik* 122 487 (1944)

TABLE 8. ISOTOPIC ABUNDANCES OF NATURAL IRIDIUM

MASS	SAMPSON AND BLEAKNEY	ORNL
191	38 5	37 1 ± 0 1
193	61 5	62 7 ± 0 1

M B Sampson and W Bleakney *Phys Rev* 50 732 (1936)

as shown in Table 9 but there is a definite drift in the differences between the ORNL data and Ewald s data with his data being low at the higher masses and high at the lower masses As stated by Bainbridge and Nier [7] Ewald used erroneous cadmium data to calibrate his plates for the photometric method and this could explain the drift in his data

TABLE 9 ISOTOPIC ABUNDANCES OF NATURAL RUTHENIUM

MASS	EWALD	ORNL
96	5 68	5 47 ± 0 03
98	2 22	1 84 ± 0 02
99	12 81	12 77 ± 0 05
100	12 70	12 56 ± 0 05
101	16 98	17 10 ± 0 06
102	31 34	31 70 ± 0 06
104	18 27	18 56 ± 0 05

H Ewald *Z Physik* 122 487 (1944)

FISSION PRODUCTS

J R Sites C E Melton

A sample of fission product neodymium formed by three years of irradiation at high flux at Chalk River was analyzed for isotopic abundances The sample was received as $Nd_2(C_2O_4)_3$ which was converted to the oxide upon heating in the mass spectrometer source The data obtained are given in Table 10

A sample of fission product praseodymium was analyzed and found to be very pure with only about 0 1% fission product neodymium in it

A fission product cesium sample irradiated at Chalk River showed isotopes at masses 133 134 135 and 137 The details of the treatment of the sample after irradiation are not known but the Cs^{135} content seems abnormally low when compared with the data of Wiles *et al* [8] The comparison is given in Table 11

Fission product krypton produced in the MTR has been analyzed and found to have the isotopic analyses given in Table 12

[7] K T Bainbridge and A O Nier Relative Isotopic Abundances of the Elements Preliminary Report No 9 *Nuclear Sciences Series* April 1 1951

[8] D R Wiles B W Smith R Horsley and H G Thode *Can J Phys* 31 419 (1953)

Xenon recovered from a special test of the homogeneous reactor by G W Parker has been analyzed and found to have the isotopic composition given in Table 13

The results obtained at ORNL are compared with the data obtained by Thode MacNamara and Collins[9] in Tables 14 and 15

[9] H G Thode J MacNamara and C B Collins *Can J Research* 27B 361 (1949)

TABLE 10. ISOTOPIC ABUNDANCES OF NEODYMIUM

MASS	NATURAL	FISSION PRODUCT
142	27 13	0 14 ± 0 01
143	12 20	28 00 ± 0 05
144	23 87	25 21 ± 0 08
145	8 30	19 27 ± 0 03
146	17 18	15 18 ± 0 05
148	5 72	8 59 ± 0 04
150	5 60	3 65 ± 0 02

TABLE 11 COMPARISON OF ISOTOPIC ABUNDANCES OF FISSION PRODUCT CESIUM

MASS	WILES (2 1 years)	ORNL (~3 years)
133	1 120	1 187
134		0 0014
135	1 045	0 551
137	1 000	1 000

D R Wiles B W Smith R Horsley and H G Thode *Can J Phys* 31 419 (1953)

TABLE 12. ISOTOPIC ABUNDANCES OF NATURAL AND FISSION PRODUCT KRYPTON

MASS	NATURAL	FISSION PRODUCT
78	0 354	
80	2 27	
82	11 56	
83	11 55	13 93 ± 0 03
84	56 90	27 13 ± 0 05
85		6 23 ± 0 005
86	17 37	52 71 ± 0 04

Radioactive not extrapolated to zero time

TABLE 13 ISOTOPIC ABUNDANCES OF NATURAL AND FISSION PRODUCT XENON

MASS	NATURAL	FISSION PRODUCT
124	0 096	
126	0 090	
128	1 919	
129	26 44	
130	4 08	
131	21 18	19 84 ± 0 06
132	26 89	15 76 ± 0 08
134	10 44	41 42 ± 0 09
136	8 87	22 97 ± 0 04

TABLE 14 COMPARISON OF ISOTOPIC ABUNDANCES OF FISSION PRODUCT KRYPTON

MASS	THODE MACNAMARA AND COLLINS	ORNL
83	14 34 ± 0 02	13 93 ± 0 03
84	26 72 ± 0 03	27 13 ± 0 05
85	7 72 ± 0 06	6 23 ± 0 005
86	51 19 ± 0 10	52 71 ± 0 04

H G Thode J MacNamara and C B Collins *Can J Research* 27B 361 (1949)

Extrapolated to zero time

Not extrapolated to zero time

TABLE 15 COMPARISON OF ISOTOPIC ABUNDANCES OF FISSION PRODUCT XENON

MASS	THODE MACNAMARA AND COLLINS	ORNL
131	13 62 ± 0 02	19 84 ± 0 06
132	20 30 ± 0 02	15 76 ± 0 08
134	36 13 ± 0 03	41 42 ± 0 09
136	29 94 ± 0 03	22 97 ± 0 04

H G Thode J MacNamara and C B Collins *Can J Research* 27B 361 (1949)

DETERMINATION OF NICKEL IN HRP FUEL

J R Sites H M Rosenstock

In setting up a mass spectrographic method of analysis for parts per million amounts of nickel in the highly radioactive HRE fuel it has been demonstrated that successful operation is obtained on samples as small as 1 μg of nickel by using iridium filaments Nickel sulfate is fused on an iridium filament as the oxide and then carefully heated while data for the ratio of mass 58 to mass 60 are taken for 10 to 15 min The technique of spiking the fuel with enriched Ni^{60} has been successfully used as a method of determining the weight of natural nickel in the fuel

INVESTIGATION OF ARE FUELS

L O Gilpatrick J R Sites

The analysis of ARE fuel capsules has been continued from the last six month period [10] This study is being conducted in cooperation with the ARE corrosion study group headed by G W Keilholtz of the Solid State Division The first objective in studying capsuled irradiated fuels has been to determine the amount of uranium lost from the body of the fuel after various treatments At least two mechanisms are known to be in operation to account for possible uranium losses during irradiation The first is loss of uranium by neutron fission or capture and the second is loss by corrosion mechanisms which segregate uranium at the container wall

A new series of fuel capsules was analyzed by mass spectrometer methods this period The fuel capsules had been redesigned to prevent segregation of the components by reducing the free volume to a minimum and the sampling techniques were improved over those used previously The most significant change in the design of the experiment was the inclusion of a second set of measurements after irradiation in addition to those required for the isotopic dilution method This second set of measurements is of the uranium isotopic abundance in the fuel after irradiation which make possible a direct measurement of the uranium burnup

It is therefore possible to measure directly the two independent variables of uranium loss by neutron burnup during irradiation and other uranium losses by such mechanisms as corrosion

The disappearance of uranium from the fuel mixture by burnup during neutron irradiation was calculated from the isotopic analysis of uranium before and after irradiation by using the rate

[10] R Baldock *et al Stable Isotope Research and Production Semiann Prog Rep Nov 20 1953* ORNL 1617 p 10

equations as follows

(1) $$N_t^{235} = N_0^{235}\, e^{-\phi t(\alpha_1+\alpha_2)}$$

(2) $$N_t^{238} = N_0^{238}\, e^{-\phi t(\alpha_4)}$$

where

α_1 = fission cross section U^{235} = 580 barns
α_2 = capture cross section U^{235} = 105 barns
α_4 = capture cross section U^{238} = 3 barns
ϕ = neutron flux per sq cm/sec
t = irradiation time sec
N_t = atoms at time t
N_0 = atoms at time 0
N^n = atoms of mass n

These equations can be combined to give

(3) $$\frac{N_t^{235}}{N_0^{235}} = \left(\frac{N_t^{238}}{N_0^{238}}\right)^{\alpha}$$

where

$$\alpha = \frac{\alpha_1 + \alpha_2}{\alpha_4} = 228 \quad ,$$

or

(4) $$\left(\frac{N_t^{238}}{N_0^{238}}\right)^{\alpha-1} = \frac{N_t^{235}\, N_0^{238}}{N_0^{235}\, N_t^{238}} = \frac{R_t}{R_0} \quad ,$$

where

$$R_t = \frac{N_t^{235}}{N_t^{238}} \quad \text{and} \quad R_0 = \frac{N_0^{235}}{N_0^{238}}$$

as measured in the mass spectrometer at time t and 0 Therefore

(5) $$N_t^{238} = N_0^{238}\left(\frac{R_t}{R_0}\right)^{1/(\alpha-1)} \quad ,$$

(6) $$N_t^{235} = N_0^{235}\left(\frac{R_t}{R_0}\right)^{\alpha/(\alpha-1)}$$

The total number of atoms of uranium (N_t) at time t equals therefore

(7) $$N_t = N_0^{234} + N_0^{235}\left(\frac{R_t}{R_0}\right)^{1\ 0044} + N_0^{238}\left(\frac{R_t}{R_0}\right)^{0\ 0044} + N_t^{236} \quad ,$$

where $N_t^{234} \cong N_0^{234}$ because of the very small contribution of U^{234} to the total N_t^{236} is obtained by direct measure at time t

To reduce Eq 7 to a form which is based upon the weight of uranium rather than the number of atoms of uranium, let

$$N_t = \frac{W_t^T\, N}{M^T} \quad ,$$

where

$$N_0^{238} = \frac{W_0^{238}\, N}{M^{238}} = \frac{W_0^T\, N\, U_0^{238}}{M^{238}} \quad ,$$

and

$$N_0^{235} = \frac{W_0^{235}\, N}{M^{238}} = \frac{W_0^T\, N\, U_0^{235}}{M^{235}} \quad , \text{ etc} \quad ,$$

where

M^T = molecular weight of total uranium at time t,
M^n = molecular weight of nuclide n
W_0^n = weight of nuclide n at time 0,
W_0^T = total weight of uranium at time 0
W_t^T = total weight of uranium at time t,
N = Avogadro number,
U_0^{238} = U^{238} assay at time 0

Equation 7 then becomes

$$(8)\quad W_t^T = W_0^T\, U_0^{234} \frac{M^T}{M^{234}} + W_0^T\, U_0^{235} \frac{M^T}{M^{235}} \left(\frac{R_t}{R_0}\right)^{1\ 0044} + W_0^T\, U_0^{238} \frac{M^T}{M^{238}} \left(\frac{R_t}{R_0}\right)^{0\ 0044} + W_t^T\, U_t^{236} \frac{M^T}{M^{236}}$$

Or letting F = the fractional part of uranium left after burnup

$$(9)\quad F = \frac{W_t^T}{W_0^T} = \frac{M^T}{\left(1 - U_t^{236} \dfrac{M^T}{M^{236}}\right)} \times \left[\frac{U_0^{234}}{M^{234}} + \frac{U_0^{235}}{M^{235}} \left(\frac{R_t}{R_0}\right)^{1\ 0044} + \frac{U_0^{238}}{M^{238}} \left(\frac{R_t}{R_0}\right)^{0\ 0044}\right]$$

The total fraction of uranium left in the fuel capsule at the end of the experimental irradiation is given by Y and is of the form[11]

$$Y = \frac{W_2}{W_1} F_g^* \frac{M_1}{M_2} \left(\frac{A_2^{235} - R\, A_2^{238}}{R\, A_1^{238} - A_1^{235}}\right)$$

where

R = measured ratio of U^{235}/U^{238} after dilution

W_1 = weight of uranium bearing fuel

W_2 = weight of spike (U_3O_8)

F_g = gravimetric factor = $3U/U_3O_8$

M_1 = molecular weight of fuel uranium

M_2 = molecular weight of spike uranium

A_1^α = abundance of uranium isotope of mass α in fuel uranium

A_2^α = abundance of uranium isotope of mass α in natural uranium

To arrive at the fractional losses of uranium other than from burnup it is only necessary to find the difference between F and Y Therefore

$$\text{Per cent corrosion losses} = \left(\frac{F - Y}{A}\right) 100$$

where A = the fractional part of uranium in the original fuel

The results of the analyses of 15 drillings from nine fuel capsules are summarized in a memorandum from Russell Baldock to G W Keilholtz[12] Analyses of four batches of starting fuel mixtures were performed by using the same methods as were used for the final materials The results are given in Table 16

A possible explanation for the larger than expected uranium values at the end of irradiation (evidenced by negative corrosion values) in the majority of the analyses seems to be that the uranium content of the melt segregates upon cooling so that nonrepresentative samples result for analysis

A third series of capsules is now being analyzed with provision for duplicate samples throughout

SENSITIVITY OF THE GENERAL ELECTRIC GAS SAMPLE MASS SPECTROMETER

J R Walton H M Rosenstock

The objective of the investigation was to determine the smallest gaseous sample necessary for a satisfactory analysis on the G E gas sample mass spectrometer The three factors determining the sensitivity of the machine are (1) the pressure in the ionization chamber (2) the rate of production of ions and (3) the collection efficiency for the ions produced Another factor of importance in analytical work is the rate of decay of the pressure in the ionization chamber due to gradual pumping away of the sample

The size of the inlet leak was determined from the constants in the Knudsen equation for effusive

[11] R Baldock *et al op cit* p 11 Eq 2

[12] R Baldock *Data on Airc aft Fuel Samples* ORNL CF 54 4 96 (Ap il 14 1954)

TABLE 16 RESULTS OF TESTS OF ARE FUEL CAPSULES

NUMBER	BORING	IRRADIATION		BURNUP (%)	CORROSION LOSS (%)
		Fac lity	T me (hr)		
503		MTR	290	15 1	8 16
220A	Central	MTR	490	30 7	−15 6
220B	Outer	MTR	490	36 7	−26 9
222A	Ce tral	LITR	273	0 34	−1 4
226A	Central	None		0	1 9
226B	Outer	None		0	−26 8
229A	Central	LITR	300	6 97	−6 5
229B	Outer	LITR	300	7 67	−12 0
230A	Ce tral	None		0	−13 2
230B	O ter	None		0	1 6
231A	Central	LITR	300	7 47	−3 4
231B	Oute	LITR	300	(7 47)	(−7 7)

Minus values are ga ns Values in parentheses are est mated

flow [13] The rate of pressure decrease was assumed to be equal to the rate of decrease of the mass 40 peak in a sample of argon The plot of peak height against time was exponential The inlet leak diameter was computed to be 0 00087 in which is in essential agreement with the 0 001 in diameter quoted by the manufacturer

The pressure in the ionization chamber was calculated by assuming molecular flow throughout with the gas entering through the 0 00087 in leak and leaving only through the ion exit slit With these assumptions the pressure in the ionization chamber was about 0 1 μ for a reservoir pressure of 6 μ.

In order to calculate the rate of production of ions it was necessary to assume a cross section for ionization of argon atoms by 75 v electrons The simplest assumption was to take the cross section equal to the kinetic theory diameter [14] With an electron trap current of $6\ 5 \times 10^{-5}$ amp this gave 2×10^{12} ions formed per second com pared with $1\ 8 \times 10^{9}$ ions collected per second at the detector This gives a collection efficiency of about 0 1% of the ions formed in the ionization chamber This efficiency factor seems quite reasonable

The 2½ liter sample reservoir was large enough to essentially maintain constant pressure for at least 1 hr which is ample time for an analysis

By assuming the ionization and collection ef ficiency of the common gases to be comparable to argon it is estimated that a satisfactory analysis can be carried out on a gas sample of 1 liter at 15 μ pressure at room temperature or 0 02 cc at STP

EQUIPMENT DEVELOPMENT

G F Wells

The third mass spectrometer MS C a 6 in radius all stainless steel analyzer has been brought into operation during this period The instrument is designed to utilize the high temperature source developed by this department[15] for direct analysis of materials requiring up to 2000°C to produce sufficient vapor for ionization

The analyzer as shown in Fig 13 uses a 2 kw accelerating potential and a maximum of approxi mately 8000 gauss field strength to give good resolution to mass 300 A vibrating reed elec trometer with a 10^{10} ohm input resistor is used as a detector amplifier enabling beam currents of 10^{-14} amp to be detected adequately

Shielding was required between the main magnet and the ion source because excessive discrimina tion in the source region was noted by a falloff in

[13] P D Zemany *J Appl Phys* 23 924 (1952)

[14] H S W Massey and E H S Burhop *Electron and Ionic Impact Phenomena* Clarendon Press Oxford 1952

[15] J R Walton *High Temperature Mass Spectrometer Oven* ORNL 1473 (Jan 8 1953)

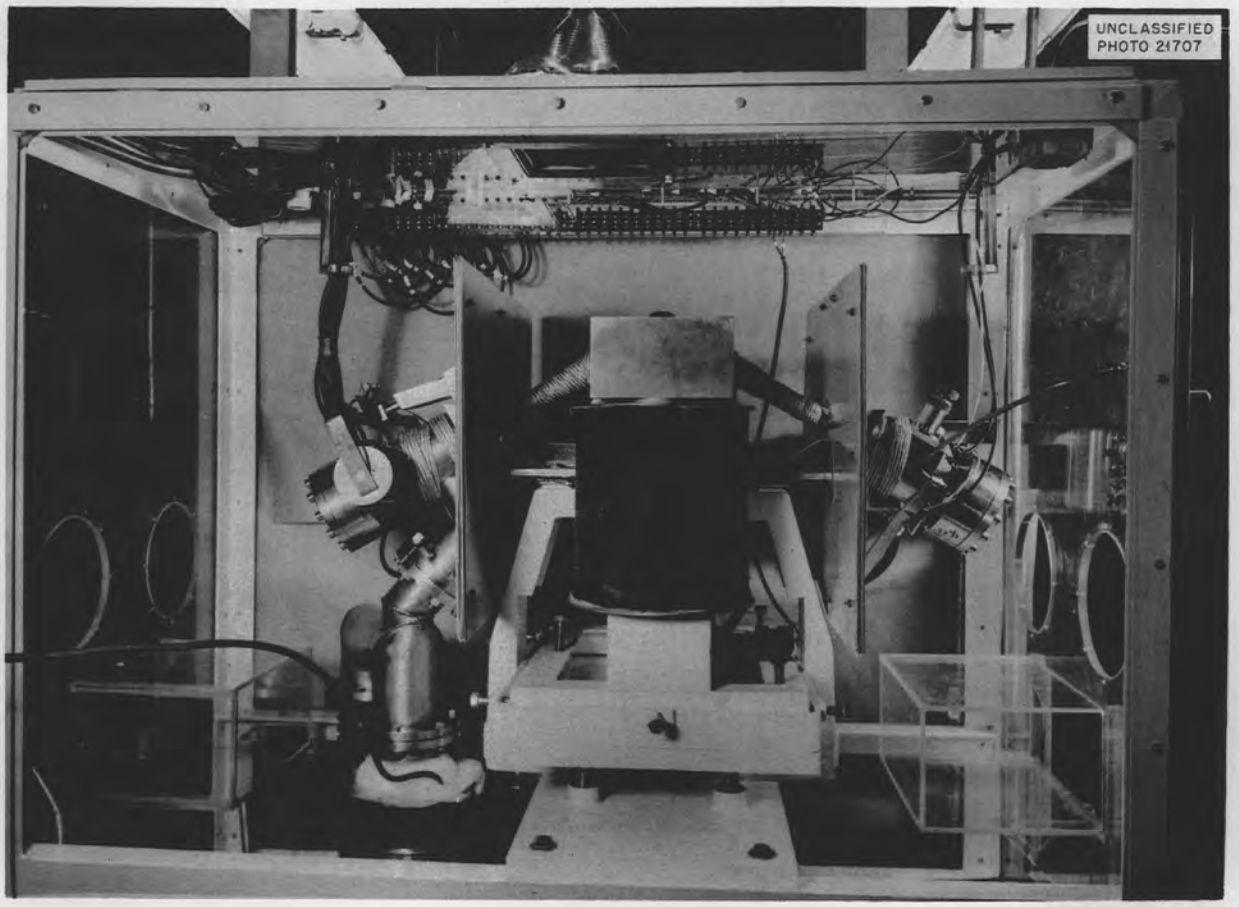

Fig. 13. Mass Spectrometer MS-C.

trap current with an increase in main-magnet field. Laminations of 20-gage hot-rolled mild steel reduced this effect markedly as noted in Table 17.

DESIGN OF A 6-in.-RADIUS, 60-deg-SECTOR TYPE OF MASS SPECTROMETER

W. R. Rathkamp

The design of the 6-in.-radius, 60-deg-sector type of mass spectrometer was undertaken in an attempt to improve some of the less attractive features of conventional all-metal 60-deg-sector type of spectrometers.[16] Some of the points which, it was felt, could be improved are:

1. conductance of the vacuum system,
2. cost of precise machining and jigging,
3. alignment of source and receiver slits,
4. cleaning of the bent tube,
5. effect upon resolution of charged oxide layers on the inner wall of the tube.

To achieve high conductance of vacuum lines and hence faster pumpdown rates, it was decided to connect the source and receiver with a large-diameter metal tube in a manner similar to the system used by Metropolitan-Vickers.[17]

However, to avoid machining and installing the side arms used in the Vickers design to contain the source and receiver assemblies, flanges were welded at 60-deg angles directly onto the ends of the central tube. As Fig. 14 shows, the source and receiver assemblies are now mounted in the open on the faces of these flanges. The necessary electrical leads are brought out through the back

[16] R. Baldock and J. R. Sites, *Phys. Rev.* 81, 294 (1951).

[17] Metropolitan-Vickers Electrical Co., Ltd., Manchester, England.

TABLE 17 EFFECT OF SHEET STEEL SHIELDING BETWEEN THE MAIN MAGNET AND ION SOURCE OF MASS SPECTROMETER MS C

ANALYZER FIELD CURRENT (ma)	TRAP CURRENT (m)			
	With No Shield	With Two Sheets	With Four Sheets	With Seven Sheets
0	0 5	0 5	0 5	0 5
50	0 44	0 495		
100	0 38	0 470	0 48	0 487
150	0 32	0 439		
200	0 29	0 402	0 44	0 465
250	0 27	0 390		
300	0 265	0 380	0 42	0 455
350	0 262	0 379		
400	0 261	0 375	0 415	0 452

of the flanges through Kovar glass feed through insulators This open arrangement permits easy installation and connection of source and receiver assemblies In operation a top hat shaped can will cover the end flanges

Another deviation from convention is in the replacement of the usual bent tube by a bay window consisting of two parallel plates having an outline cut roughly to conform with the beam path and welded over a full length slot cut in the side of the central tube This feature provides pumping along the entire length of the beam path and also leaves the walls available so that they can be scrubbed through the end flanges when cleaning is necessary

With these two modifications – flanges on the tube ends and an open beam tube – the only precision dimensions needed are the angle between the two end flanges and the distance between them All other dimensions are not at all critical

Since all inner parts of the spectrometer tube can be easily reached through the ends the proposal was made to gold plate the entire inside surface Gold is an excellent electrical conductor and is very resistant to attack by any material that might be encountered in a mass spectrometer therefore gold plating should eliminate the difficulty observed in metal mass spectrometers namely the formation of oxide spots Since most oxides are poor conductors of electricity these spots soon receive a static charge from the ion beam These charged spots destroy the field free region within the tube and the end result is defocusing of the beam and poor resolution Gold is also a very poor emitter of secondary electrons when struck by a beam of ions and suppression of secondary electrons is an important consideration particularly in the region of the receiver

With the source and receiver mounted on the flanges at the central tube ends it may be noted that it is possible to look through the source slit down the axis of the central tube and to view directly the receiver slit This means that the two slits can be aligned by direct inspection and any misalignment can be readily detected

An internal valve not shown on Fig 14 has been designed to close off the source from the rest of the tube and to permit changing of sources without letting the entire tube down to air The source region will be roughed down through a separate vacuum line before the source cut off valve is opened and the evacuation is finished with the mercury diffusion pump

At the present time the support structure and the vacuum manifold are nearly completed and work is under way on the electrical circuits and the remainder of the tube

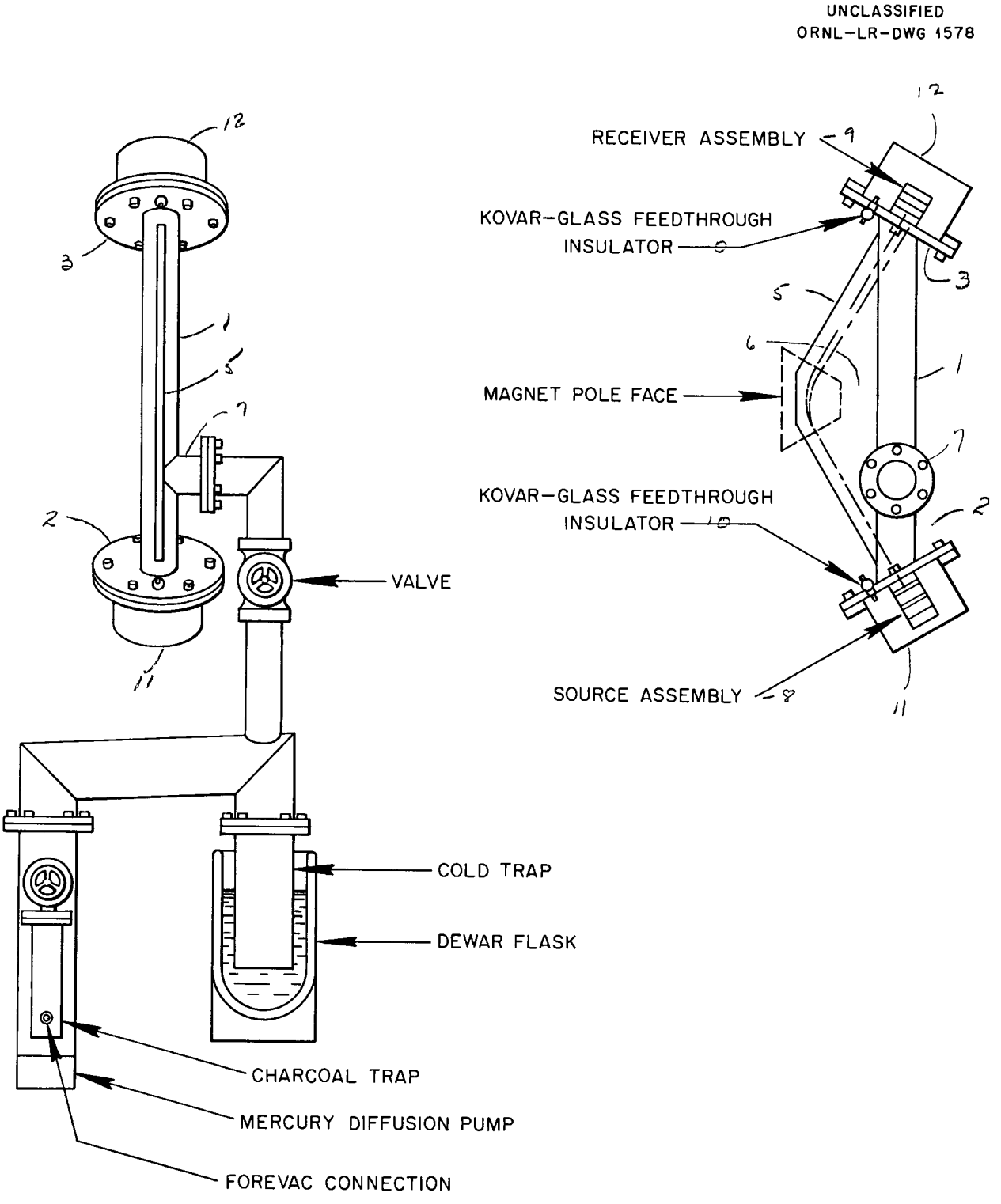

Fig 14 Mark IV Mass Spectrometer

STABLE ISOTOPE SEPARATION RESEARCH AND CALUTRON OPERATONS

C E Normand Department Head

INTRODUCTION

Six elements (K La Hf Zr Cr and Ni) were processed in the calutrons during the past six month period The separations of the isotopes of potassium and lanthanum had as their chief objectives the substantial enrichment of the minor constituents K^{40} (natural abundance 0 012%) and La^{138} (natural abundance 0 087%) The separation of chromium isotopes was taken as the occasion for developing a versatile high output source All collections were made by operating personnel under the direction of R L Caldwell G J Fisher and K A Spainhour Equipment maintenance and development were under the direction of W K Prater and G M Banic was in charge of electrical maintenance and development L O Love W A Bell and C V Ketron initiated and contributed to both the development and the production activities

COLLECTIONS AND RELATED DEVELOPMENTS

Potassium Series GN XBX

The collection of potassium isotopes was started on October 7 1953 and had as its objective the production of K^{40} of high purity from a batch of charge material in which this isotope had been enriched from 0 012% to nearly 0 03% by irradiation in the NRX Reactor at Chalk River Processing of this batch of material was completed on March 12 1954 with the production of 18 mg of K^{40} of 22% isotopic purity

During a preliminary phase of operation [1] normal KI charge was used for evaluating equipment and establishing operating procedures A high ratio of monitored K^{39} to K^{40} ion current and a low incidence of sparking were taken as the criteria for good operation On this basis the source adopted for use in processing the enriched potassium was a medium temperature source equipped with supplementary heat shielding and with a stainless steel ion exit slit and accelerating electrodes The arc chamber and accelerating electrodes were of standard 0-deg type The ions were collected in copper pockets behind $\frac{1}{8}$ in defining slits in a carbon faceplate Water cooling of the K^{39} pocket (since K^{39} comprises 93% of the total ion beam) and isolation of the K^{40} pocket by carbon shielding were adopted to minimize contamination between pockets

Preliminary to processing the enriched charge material was carried through a bake out process in the calutron to remove sodium contamination

During the processing of the enriched material the average ratio of K^{39} to K^{40} current was 2621 1 (isotopic ratio 3108 1) To maintain this ratio and to minimize sparking the rate of production was limited to 10 ma or less the average rate for the series being 8 9 ma To maintain this low total ion current the arc was operated at abnormally low current and high voltage and it is significant that no filament failures occurred under these conditions even though one run was for 330 hr

Production was maintained during 4420 of the 5239 tank hours devoted to the processing of potassium and the following estimated amounts in grams of isotopes were collected

K^{39}	54 5684
K^{40}	0 0233
K^{41}	3 3025
Total	57 8942

Lanthanum Series GO XAX

Collection of the lanthanum isotopes (La^{138} La^{139}) was started on October 20 and was completed on December 3 1953 Equipment and operating procedures remained essentially as reported previously [1]

As anticipated on the basis of small mass separation at the receiver (0 366 in) and the fact that the minor constituent (La^{138} 0 087%) lies on the broad low energy side of the major constituent (La^{139} 99 913%) the enrichment of La^{138} was not great The 1 74% purity obtained does however represent a threefold increase over previous collections of this isotope

Production was maintained during 876 of the 1289 tank hours devoted to this collection series of lanthanum isotopes The average production rate was 7 9 ma and the following estimated weights in grams of the two isotopes of lanthanum

[1] C E Normand *Stable Isotope Research and P oduction Semiann Prog Rep Nov 20 1953* ORNL 1617 p 19

were collected

La^{138}	0 9064
La^{139}	35 1632
Total	36 0696

Hafnium Series GP XAX

The six isotopes of hafnium (Hf^{174} Hf^{176} Hf^{177} Hf^{178} Hf^{179} Hf^{180}) were collected during the period from December 3 1953 to February 10 1954

Hafnium tetrachloride ($HfCl_4$) charge was processed in a low temperature source at a charge vaporization temperature of 100 to 125°C Low output and the growth of deposits of hafnium metal in the collimating slot and anode regions of the arc chamber were the principal difficulties encountered These problems led to the use of several types of arc chambers and accelerating electrodes and to the evaluation of $HfBr_4$ as a charge material also nitrogen argon and chlorine were evaluated as support gases The feasibility of processing hafnium metal in a bombardment heated source was also investigated and a study was made of the manner of formation of deposits in the arc chamber The only significant improvement in production resulted from the substitution of $HfBr_4$ for $HfCl_4$ charge With the bromide charge production was sufficiently improved in every respect to justify its use in most of the concluding runs of the series

Because of the small mass separation at the receiver only the even numbered isotopes were collected in early runs of the series while only isotopes of mass 174 177 and 179 were collected in later runs The rejected isotopes in each case were stopped by the receiver faceplate

Production was attained during 1165 of the 2030 tank hours devoted to this collection of hafnium isotopes The average total ion current corrected to include the rejected ion beams was 7 01 ma and the following estimated amounts in grams of hafnium isotopes were collected

Hf^{174}	0 3913
Hf^{176}	1 8302
Hf^{177}	4 8463
Hf^{178}	7 1902
Hf^{179}	3 9932
Hf^{180}	8 5624
Total	24 2267

Zirconium Series GQ XAX

Collection of the isotopes of zirconium (Zr^{90} Zr^{91} Zr^{92} Zr^{94} Zr^{96}) was started on February 10 and completed on March 24 1954

Zirconium tetrachloride ($ZrCl_4$) was processed in low temperature sources at a charge temperature of 125 to 175°C and it presented essentially the same problems as those encountered in the processing of hafnium The formation of deposits of zirconium metal in the arc chamber impaired production and led to various alterations being made in the arc chamber and accelerating electrode system As an extreme measure for eliminating deposits a source was constructed in which $ZrCl_4$ vaporized in a conventional charge oven at about 175°C was fed into a bombardment heated arc chamber operating at 2000°C or more Deposit formation was greatly reduced by this means but there was no corresponding increase in the rate of production It is significant however that a source can be operated with this extreme temperature difference between the charge oven and the arc chamber

Production was maintained for 932 of the 1446 tank hours devoted to the separation of zirconium The average ion current was 11 1 ma and the following estimated amounts in grams of isotopes were collected

Zr^{90}	19 2560
Zr^{91}	3 9465
Zr^{92}	5 8179
Zr^{94}	5 4204
Z^{96}	0 6439
Total	35 0787

Chromium Series GR XBX and XAX and Series GS-XAX

Separation of the isotopes of chromium (Cr^{50} Cr^{52} Cr^{53} Cr^{54}) was started on March 12 and is still in progress The primary objective of this separation is the collection of 5 g or more of Cr^{54} (natural abundance 2 38%) for use in the production of the radioisotope Mn^{54} by the (p n) reaction in cyclotron bombardment Separations were started (series GR XBX) by using chromic chloride ($CrCl_3$) charge in standard equipment of a size suitable for use in the small 24 in radius calutrons At the same time in view of the large amount of material to be processed and the anticipated need for processing large quantities of other elements a program

was initiated for adapting large equipment to the processing of chromium iron and other elements in the 48 in radius calutrons Late in March a second production series (series GS XAX) was started in which this large-scale equipment was used A few weeks later all chromium activities were transferred to the XAX calutrons The tank time was divided between the small units of standard type and the large units being developed

Four types of sources have been used First used was a standard medium temperature source heavily heat shielded to permit operation at the temperature (600°C) estimated to be adequate for vaporizing $CrCl_3$ charge The production record from this unit was marred by the appearance of very intense beams of extraneous ions particularly of iron and copper High source drains excessive heating and high tank pressure resulted from these extraneous beams and limited chromium output Moreover the required operating temperature appeared to be some 200°C higher than anticipated

The apparent need of higher operating tempera ture together with the presence of intense iron and copper ion beams and the visible corrosion of metal source parts exposed to the charge vapor led to the trial of a standard high temperature source The higher operating temperature was well within the range of this unit, and the fact that the charge bottle vapor manifold and arc chamber were all made of carbon permitted the elimination of all metal from contact by the charge and its vapor The result was a marked reduction of extraneous ions source drains and tank heating and a corresponding increase in chromium ion output

Before the seriousness of the problem of metal pickup by the charge vapor had been established a large four arc source of the type used in the Alpha 2 process had been adapted to the proces sing of $CrCl_3$ and a corresponding four component receiver had been built Viewed in retrospect it is evident that this effort was doomed to failure All the difficulties encountered in operating the medium temperature source appeared in intensified form when the larger source was put into operation However this confirmation of the necessity of eliminating metal from exposure to the $CrCl_3$ vapor stream suggested the next step in source development

An all carbon source, designed to operate in the 500 to 1000°C temperature range and providing two arcs of Alpha 2 size has been designed and built by the Division engineers and servicing personnel The components are supported in an Alpha 2 type source frame and are so mounted as to utilize existing accelerating electrodes and re newable filaments A single unit of this type has been completed and put into operation Limited experience with this unit closely parallels earlier experience with the standard high temperature source Extraneous ion beams source drain, and tank temperature and pressure are greatly reduced while chromium ion output is substantially in creased

Comparative performance of the four sources in vestigated is shown in Table 18

Nickel Series GT XBX

Separation of the isotopes of nickel (Ni^{58} Ni^{60} Ni^{61} Ni^{62} Ni^{64}) was started on April 9 and is still in progress Nickel chloride ($NiCl_2$) charge is processed at 575 to 675°C in a standard medium temperature source with heat shielding applied to both charge oven and arc castings Intense beams of copper ions are also produced along with ions of nickel and receiver pockets are placed to col lect the isotopes of copper (Cu^{63} Cu^{65}) along with those of nickel Collection is in carbon pockets placed behind $\frac{1}{8}$ in defining slits Except for short filament life (average 22 hr with 90% of the terminations due to filament failure) the processing of nickel has presented no serious problems

Production has been maintained during 883 of the 1164 tank hours devoted to nickel The average ion currents have been 62 7 ma nickel and 21 6 ma copper and the following estimated amounts in grams of isotopes have been collected

Ni^{58}		81 7808
Ni^{60}		33 3124
N^{61}		1 2724
N^{62}		4 0321
Ni^{64}		0 9715
	Total	121 3782
Cu^{63}		31 5306
Cu^{65}		13 8365
	Total	45 3671

TABLE 18 COMPARATIVE PERFORMANCE OF VARIOUS ION SOURCES

SOURCE TYPE	CALUTRON	NUMBER OF RUNS	MAXIMUM Cr ION CURRENT (ma)	AVERAGE Cr ION CURRENT (ma)	SOURCE DRAIN (ma)
Standard medium temperature	XBX (24- n)	26	73 9	40 3	289
Standard high temperature	XBX (24-in)	6	103 5	71 6	237
Standard medium-temperature	XAX (48 in)	3	46 0	23 9	205
Standard high temperature	XAX (48 in)	4	82 3	44 6	260
Alpha 2 medium temperature	XAX (48 in)	6	38 6	13 5	750
Alpha-2 high temperature	XAX (48-in)	1	135 0	72 6	1050

STABLE ISOTOPE CHEMISTRY RESEARCH AND PRODUCTION

Boyd Weaver Department Head

INTRODUCTION

Charge materials were prepared for the calutron separation of the isotopes of eight elements Separated isotopes of 11 elements were chemically refined Continued progress was made in the development and application of processes for the separation of rare earths

PREPARATION OF CHARGE MATERIALS

C W Sheridan C F Harrison
W C Davis

Lanthanum and Samarium

The rare earth elements lanthanum and samarium were supplied as anhydrous chlorides To prepare the chlorides the rare earth oxides were heated repeatedly in open dishes with an excess of ammonium chloride until the products were completely water soluble The remaining ammonium chloride was removed by heating *in vacuo* After calutron operations the samarium left in charge bottles and deposited on calutron parts was conserved for future use by a purification process that included successive precipitations with ammonium hydroxide and oxalic acid followed by ignition to the oxide

Nickel

Nickelous chloride obtained as the hydrate or derived from the hydroxide or carbonate was dehydrated by heating *in vacuo*

Potassium

The primary charge material was 1 kg of potassium carbonate in which the K^{40} content had been increased to 0 029% by neutron irradiation at Chalk River This material was dissolved in hydriodic acid and the iodide was dehydrated This primary material was extended by recovery of material from calutron parts The alkalinity of some of the recovered material was used to remove most of the impurities as alkali insoluble hydroxides Neutralization with hydriodic acid gave material that was ready for dehydration

Chromium

Anhydrous chromic chloride was prepared by chlorination of chromium metal with chlorine gas at 950°C and by chlorination of chromic oxide by carbon tetrachloride at 600°C The latter process was found to be more productive although both reactions are slow Prior to use the very fluffy product was compressed into dense pellets

Zirconium

Zirconium tetrachloride was prepared by chlorination of the oxide with carbon tetrachloride at 500°C

Hafnium

Hafnium tetrachloride was prepared by chlorination of the oxide with carbon tetrachloride at 500°C After hafnium tetrabromide was found to give a somewhat higher efficiency in the calutron this compound was prepared by direct bromination of the oxide mixed with carbon The reaction was slow even at 900°C Some assistance was given by adding carbon monoxide to the bromine vapor stream The valuable hafnium was recovered from calutron parts by treatment with strong acids and was purified by a system that included hydroxide and sulfide precipitations electrolysis and a final precipitation with mandelic acid

Iron

Preparation for a future protracted separation of iron isotopes was made by beginning the production of anhydrous ferrous chloride by vacuum dehydration of the hydrate Fairly sizable amounts of enriched Fe^{58} (natural abundance 0 33%) and Fe^{54} (natural abundance 5 9%) are used in the ORNL Graphite Reactor to produce radioactive Fe^{59} (45 d) and Fe^{55} (2 9 y) the Fe^{58} must be relatively free of Fe^{54} in order to keep the longer lived Fe^{55} from the Fe^{59}

CHEMICAL REFINEMENT OF ISOTOPES

W C Davis R L Bailey
F B Thomas C F Harrison

Progress was made in the chemical refinement of the isotopes of 11 elements La Sm Gd Ti Hf Ir Ru Ca K Fe and Cr The following discussion concerns those elements of which a series was brought to completion

Lanthanum

The lanthanum oxides obtained by ignition of carbon pockets containing lanthanum isotopes were dissolved in hydrochloric acid After filtration the lanthanum was purified by multiple ammonium hydroxide and oxalic acid precipitations The final purified oxalate was ignited to the oxide at 850°C Production data[1] are in Table 19

TABLE 19 PRODUCTION DATA ON LANTHANUM ISOTOPES

ISOTOPE	LOT NUMBER	WEIGHT OF La_2O_3 (g)	IMPURITIES FOUND
138	GO823(a)	1 0090	Yttrium <0 05%
139	GO824(a)	32 7855	None detected

Titanium

The impure titanium dioxide obtained from ignition of the carbon collectors was dissolved in a mixture of sulfuric and hydrofluoric acids After evaporation of hydrofluoric acid the sulfate solution was diluted and titanium hydroxide was precipitated with ammonium hydroxide centrifuged and dissolved in dilute sulfuric acid The titanium was complexed with tartaric acid and purified by an alkaline sulfide precipitation Further purification was obtained by precipitating titanium cupferride from a dilute sulfuric acid solution The precipitate was dried and ignited to titanium dioxide Production data[1] are in Table 20

Iridium

The iridium metal left by ignition of carbon collector pockets was partially purified by dissolving or destroying impurities by successive treatments with hydrochloric nitric and finally a mixture of hydrofluoric and sulfuric acids The resulting insoluble metal was filtered on paper and ignited The iridium metal was fused with sodium chloride in a stream of chlorine at 850°C and dissolved in water The hydrated oxide was precipitated by treatment with sodium bromate dehydrated by heating leached with water and reduced to metal by hydrogen Production data[1] are in Table 21

Calcium

Calcium isotopes were dissolved from copper pockets by nitric acid and the acid was removed by evaporation Copper was removed by electrolysis from dilute solution with platinum electrodes Nitrate was removed by repeated additions of hydrochloric acid evaporation and final treat

[1]Spectrochemical analyses are performed in the Stable Isotope Research and Production Division Spectrochemistry Laboratory J A Norris in charge

TABLE 20 PRODUCTION DATA ON TITANIUM ISOTOPES

ISOTOPE	LOT NUMBER	WEIGHT OF TiO_2 (g)	IMPURITIES FOUND (%)					
			Al	Ba	Fe	Mg	Na	Si
46	GA752(a)	7 0578	0 05		0 02	0 01		0 01
47	GA753(a)	4 4160			0 02			
	GA753(b)	3 7593		0 05	0 02	0 01		0 1
48	GA754(a)	59 4740	0 05		0 05			
	GA754(b)	29 3726	0 05		0 1			0 05
49	GA755(a)	2 9417			0 02			0 01
	GA755(b)	6 7579	0 1		0 02	0 02	<0 02	0 05
50	GA756(a)	3 0930			None detected			
	GA756(b)	2 3150			0 05	0 01		0 02

TABLE 21 PRODUCTION DATA ON IRIDIUM ISOTOPES

ISOTOPE	LOT NUMBER	WEIGHT OF Ir (g)	IMPURITIES FOUND (%)								
			Cu	Fe	K	Li	Mg	Na	Ni	Si	Ti
191	GL810(a)	1 0053	<0 05	0 05	<0 02		<0 02	<0 02	<0 02		0 02
193	GL811(a)	1 1888	0 02	0 04	0 04	0 02	<0 02	0 04		0 08	

ment with formic acid Sulfide precipitations were made first from very dilute hydrochloric acid and then from ammoniacal solution Iron was oxidized with bromine and precipitated with ammonium hydroxide All precipitates had to be redissolved and reprecipitated in order to recover coprecipitated calcium The calcium was then precipitated by ammonium oxalate ignited redissolved and reprecipitated twice Silica was removed by double evaporation of hydrochloric acid before the final oxalate precipitation This oxalate was ignited only to calcium carbonate at 600°C Oxalate precipitation from homogeneous solution by hydrolysis of methyl oxalate reduced coprecipitation of impurities Production data[1] on the latest series are in Table 22 Some of the rarer isotopes are below the usual standard of purity but the quantities are too small to afford further work with a consequent sacrifice of material for spectrographic analysis The long list of trace impurities is indicative of the extent of original contamination and the difficulty of removing it

Potassium

Since the primary purpose of the latest separation of potassium isotopes was the greatest possible enrichment of K^{40} a discussion of the chemical refinement of this isotope is given here

With the aim of obtaining maximum enrichment in part of the product the copper collectors were cut into selected sections thus giving four final fractions The potassium was dissolved from the collectors with dilute nitric acid the volume was reduced by evaporation and the copper was removed by electrolysis All water used was either quadruply distilled or purified after distillation by passage through a deep body of cation exchange resin in the hydrogen form Volumes were held to a minimum Nitric acid was destroyed by repeated evaporation with hydrochloric and formic acids A sulfide precipitation was made from dilute hydrochloric acid and all excess hydrogen sulfide was boiled off before making a precipitation with ammonium hydroxide A further precipi

TABLE 22 PRODUCTION DATA ON CALCIUM ISOTOPES

ISOTOPE	LOT NUMBER	WEIGHT OF C CO_3 (g)	IMPURITIES FOUND (%)													
			Al	B	C	C	F	Mg	M	M	N	S	S	S	T	Z
40	F0689( )	243 50						0 02			0 04	0 02				
42	F0690( )	0 5753						0 01				0 01				
43	F0691( )	0 7723									0 02					
44	F0692( )	2 9343	<0 04			<0 02	0 04	0 04	<0 04	0 04	<0 04	<0 08	<0 04	0 06	0 005	
46	F0693( )	0 1180	<0 04	<0 02		<0 04	0 04	<0 04			<0 02	0 1		<0 1		0 01
48	F0694( )	0 4426	<0 04	<0 04	<0 02			0 2	0 2		0 04	<0 08		0 1		

tation was made with freshly prepared ammonium sulfide solution The filtrate was evaporated to dryness and the ammonium salts were destroyed with aqua regia The remaining salts were converted to perchlorates by evaporation to dryness with perchloric acid

In spite of care to avoid oxidizing conditions during sulfide precipitations sulfate was found to be present at this point and it was removed by addition of a minimum amount of barium chloride solution After filtration of the barium sulfate the hydrochloric acid was removed by evaporation to dryness with perchloric acid After another dilution and evaporation to near dryness the residue was cooled about 0 3 ml of absolute ethanol was added and the mixture was cooled to 0°C for 15 min The minute volume of solution was filtered on a small sintered glass filter of fine texture The crystals of $KClO_4$ were washed with cold absolute ethanol containing 0 2% perchloric acid and then washed through the filter with hot water into a small quartz cup After evaporation to dryness the perchlorate was converted to chloride by slow heating to 650°C The KCl was moistened with water evaporated to dryness and transferred to a vial in which it was dried at 200°C overnight cooled and weighed

Since none of this material could be spared for spectrochemical analysis the mass spectrometer was used as a chemical analytical tool [2] In the course of heating the microgram quantities of the material for mass analysis a thorough survey was made of other masses No impurities were observed other than a trace of sodium This amount of sodium is believed to be so small that it will not seriously affect the accuracy of any work to be done with the isotope thus the material may be used with confidence that it is pure KCl

Mass analyses showed that the enrichment of the four fractions varied as expected However since the three richest fractions comprised only one third of the small total all four fractions were recombined to give 34 3 mg of KCl in which the potassium contained 22 1 at % of K^{40} Approximately 0 4 mg of KCl had been used in the five mass analyses

[2] Mass analyses are performed in the Stable Isotope Research and Production Mass Spectrometer Laboratory Russell Baldock in charge

SEPARATION OF RARE EARTHS

F A Kappelmann F M Scheitlin
C F Harrison F B Thomas

Development of the process of separating rare earths by countercurrent extraction with tributyl phosphate and nitric acid has been continued Some progress was made in the concentration of dysprosium about 3 kg of oxide having been raised to the level of 88 to 90% Dy_2O_3 The period of large scale separation was brief because the extraction columns borrowed from the Y 12 organization were recalled Construction of a pilot plant in the Stable Isotopes Operation Building is now nearing completion The old columns were used for 13 days on a double shift basis to purify 40 kg of rare earth oxides These concentrates had acquired a high concentration of iron in repeated passage through stainless steel equipment and the sulfate content of the water used had been concentrated by numerous evaporations The presence of sulfate results in low unpredictable distribution coefficients

The operation of small experimental columns has given additional information regarding the effects of various conditions on extractions A small quantity of dysprosium has been concen trated to the 94% level

A shipment of 250 lb of milled gadolinite ore containing approximately 100 lb of rare earth oxides has been received A process has been devised and tested by which the rare earth content can be prepared for the separation of the individual elements entirely without precipitations or ig nition Gadolinite is essentially a silicate of rare earths iron and beryllium The rare earth content includes 60% yttria and small amounts of the cerium earths The metallic constituents are all dissolved away from the silica by heating with concentrated nitric acid At very high acidities iron is even more extractable into tributyl phos phate than are the rare earths In the range of 6 to 10 *N* nitric acid the heavier rare earths have favorable distribution coefficients while the coef ficient of iron is low Thus conditions can be so arranged that all the impurities including the iron are kept in the nitric acid along with the nearly worthless lighter earths while the desired heavy rare earths are extracted entirely into the organic phase By a second extraction the rare earths are washed out of the tributyl phosphate by 3 *N* acid and passed to an evaporator for concentration Thorium remains in the tributyl phosphate under these conditions Results of a typical experiment are given in Table 23

The extraction column used was rather simple and was not expected to give more than five ex traction stages The feed solution was 10 5 *N* nitric acid containing about 30 g/liter of rare earth oxides along with all the dissolved impurities The aqueous stripping solution in the top of the column was 6 *N* nitric acid Relative flow rates for aqueous feed and organic were 0 5 1 0 1 6 The tributyl phosphate extracted 86% of the rare earth content

The presence of yttrium as the major constituent in the oxides from gadolinite presents special problems since it greatly increases the quantity of material to be handled and the difficulty of purifying such elements as dysprosium and erbium In the extraction series it falls between holmium and erbium Any simple method of removing it prior to extraction operations would therefore be of great value A survey has been initiated to determine the applicability of combinations of certain chemical reactions in which yttrium tends to behave like the cerium earths There has been no published work on several possible combi nations of complexing agents and precipitations from homogeneous solution Results of laboratory experiments thus far are too preliminary to warrant conclusions

TABLE 23 PRELIMINARY FRACTIONATION OF GADOLINITE OXIDES

ELEMENT	APPROXIMATE OXIDE (%)		
	In Feed	In Raffinate Fraction	In Organic Fract on
Y	65		68
La	1 2	11	
Ce	4 2	36	
Pr	1	6	
Nd	5 5	36	
Sm	3	6 6	1 6
Eu			
Gd	4 7	T ace	5 8
Tb	1	Trace	2
Dy	5 6		9
Ho	0 8		0 7
Er	3 4		4 7
Tm	Present		Present
Yb	4 2		4 7
Lu	Present		Present

Additional fractionation of large quantities of samarium europium gadolinium concentrates will raise their europium content to the level where this element may be obtained readily by electro reduction methods Some experience has been gained in the preparation of europium(II) sulfate A 40% yield of 94% europia was obtained from the first experiment with material containing only 3% europia

RESEARCH AND DEVELOPMENT STABLE ISOTOPES

P S Baker F R Duncan
H B Greene

INTRODUCTION

During the past six months the efforts of the Research and Development Stable Isotopes Group have encompassed a variety of problems several of which have been associated with the continua tion of investigations reported previously and others of which have originated since the last report

INERT GAS SEPARATIONS

The program dealing with the collection of gas ions on metal targets has continued during the period with tantalum stainless steel Advance Metal (a Cu Ni alloy) molybdenum tungsten and graphite being added to the list of target materials tested previously With the possible exception of graphite all these materials showed similar values for the quantity of argon collected on a stationary target of solid material One collection of argon in which graphite was used yielded about 0 058 cc of gas per square inch of target as compared with an average retention of about 0 014 cc/sq in on other materials

In order to compare the reception and retention of neon with argon runs were made with eight receiving targets of eight different metals ion conditions beam strengths and innage times were kept as nearly alike as possible There was con siderable variation in results and although no positive conclusion can be drawn the average retention of neon was only about one half that of argon

With the need for more consistent data becoming apparent two possible variables were investigated For example it is possible that gas was being adsorbed by portions of the target other than those actually being struck by the beam and that this scattered retention varied among targets When the targets were trimmed to the exact sizes of the defining slits and the retention was compared with that of the larger targets it was found that trimmed targets of brass silver and copper yielded less gas upon outgassing than did untrimmed targets whereas several other metals showed no significant differences

The targets for all the runs mentioned here and in the previous semiannual report[1] were mounted upon water cooled copper plates Since variations in effectiveness of cooling might result in varia tions in efficiencies of retention this effect was studied A receiver was constructed in which thin walled ¼ in copper tubes were used as receiving targets with four tubes cooled by circulating water and four others uncooled Table 24 indicates that with one exception the cooling helped the re tention of argon

The search for a retainer of gas ions which would be more suitable for larger amounts of gas led to the design and construction of a prototype receiver in which oil is used as the gas absorber This unit made for small scale operation in the vapor pressure magnet facilities[2] embodies a horizontal rotating drum the lower portion of which dips into oil and which has a wiper at the top to remove the oil that has been exposed to the beam The drum is placed behind a defining slit and argon ions of 1 to 2 kev are allowed to impinge upon the oil film on the drum (Fig 15) Diffusion pump oil one of the silicone oils and Octoil were exposed to the beam and then were outgassed at about 300°C in the apparatus shown in Fig 16 Analyses with the mass spectrometer indicated that argon was being collected at these low energies but that the amounts were small when

[1] P S Baker F R Duncan and H B Greene *Stable Isotope Research and P oduct on Semiann Prog Rep Nov 20 1953* ORNL 1617 p 18

[2] These a e small c le c lutron facil t es built sev eral years ago to aid in evaluating charge materials for full scale calut on sotope separ t on

TABLE 24 ARGON ADSORPTION ON COOLED AND UNCOOLED TARGETS

C b c cent meters of gas at STP per square cent meter of target receiv ng rea

COOLED	UNCOOLED
0 024	0 005
0 008	0 005
0 011	0 004
0 010	0 027

compared to the quantities absorbed by simply bubbling argon through the oil Furthermore decomposition products formed during the run and/or during subsequent outgassing made the analyses difficult These impurities would also tend to make gas purification more of a problem

The possibility of using this same equipment for liquid metal absorbers such as gallium or low melting alloys is being studied

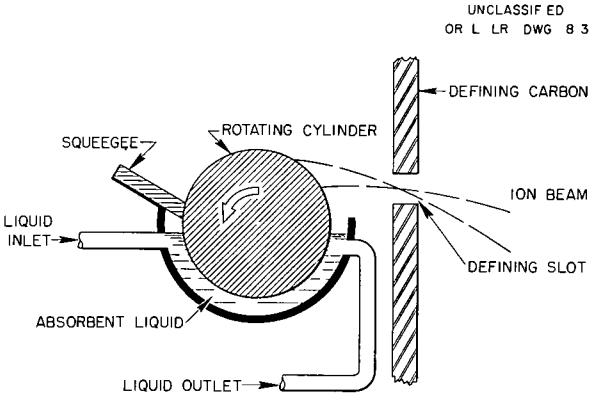

Fig 15 Rare-Gas Receiver with Liquid Absorbent

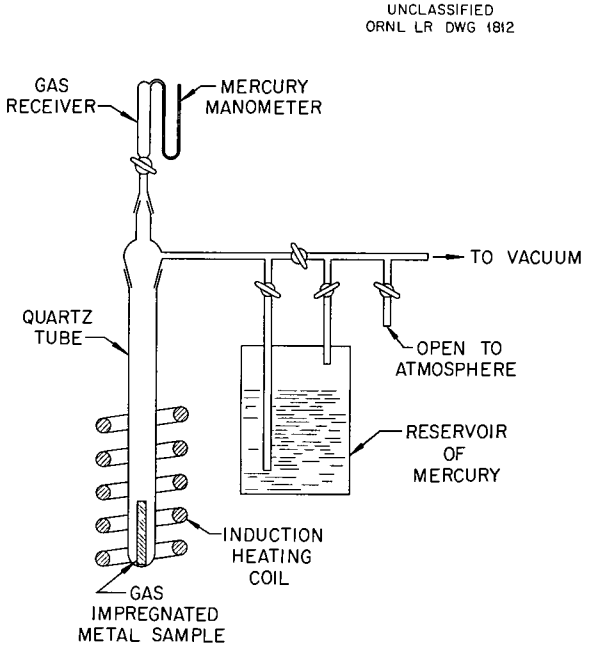

Fig 16 Gas Recovery Apparatus

METAL CASTING

Lithium 6 Targets

Three targets of various weights containing high purity Li^6 metal were prepared for the High Voltage Physics Section The metal was vacuum distilled by the process previously reported[3] and according to spectrochemical analysis had a purity of about 99 9% The targets were packaged by the usual oil casting technique

Spectrometer Shield

Following a discussion with T Love of the Bulk Shielding Group a shield of normal lithium metal was prepared for use with the gamma ray spectrometer Figure 17 indicates the general size shape and structure of the shield About 25 lb of metal was melted at 200°C in white mineral oil and after being decanted from the oil into stainless steel beakers the metal was ladled into the heated stainless steel shells through appropriate openings After cooling the filling ports were welded shut and an x ray examination was made to assure soundness of the final casting

[3] P S Baker F R Duncan and H B Greene *Science* 118 778 (1953)

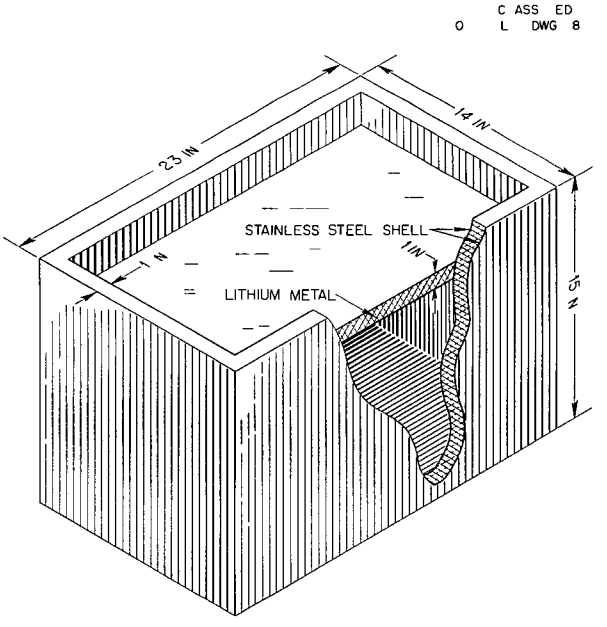

Fig 17 Lithium Shield Casting

TARGET PREPARATION

Since the number of requests for various targets of enriched isotopes (in addition to the high purity Li^6 targets mentioned above) has increased recently the preparation of such targets is being investigated

Massive Metal

Preliminary work with the Westinghouse Research Laboratories on the preparation of a 35 g target of Fe^{54} $1\frac{1}{4} \times 1\frac{1}{4} \times \frac{1}{4}$ in has indicated that the most promising reduction technique for small amounts of material is the reduction of the oxide to metal powder by hydrogen A study of the methods for formation of massive metal from the powder has shown that powder metallurgy is the most practical process when the high melting point of iron its reactivity and the required dimensions of the sample are considered A prototype target of normal iron was made by reducing Fe_2O_3 in hydrogen and compacting the resulting powder at about 25 000 psig in a mold designed especially for the target Then as suggested by J H Coobs of the Metallurgy Division the resulting mass was sintered at about 1050°C in a reducing atmosphere of hydrogen The target was then alternately compressed in the mold and annealed in a reducing atmosphere until further compressions showed only negligible decreases in volume Under the conditions used the maximum attainable density is about 80% of theoretical but by using higher pressures of the order of 50 000 psig densities greater than 90% of theoretical can be obtained

Isotopic nickel metal has also been prepared by a method similar to that for iron namely reduction of the oxide in a stream of hydrogen However the powder so formed can be melted together rather readily and then rolled to give metal sheets and foils of almost any desired thickness

Metal Films

Vacuum Distillation An apparatus for plating targets by vacuum distillation of metals and salts has been constructed It consists essentially of a bell jar mounted on a modified face plate of the vapor pressure magnet equipment [2] Power supplies associated with these facilities are utilized when resistance heated filaments are used as sources in the sputtering and evaporation techniques

Since it is desired that enriched chromium be deposited in layers several thousandths of an inch thick on cyclotron targets the initial work with this equipment was done with metallic chromium A filament of 0 170 in tantalum $4\frac{1}{2}$ in long bolted between water cooled supports was heated with a power supply of more than 300 amp at about 6 v This gave a sufficiently high temperature (above 1500°C) to melt chromium and to evaporate it under vacuum

Satisfactory deposits so far have occurred only when the target was several inches away from the source but inefficient recovery results at these distances Use of narrow deep boats to define the path of the evaporating material gives a better deposit but the transfer is slow and still not as efficient as is desired

Electroplating Methods are being evaluated for electroplating chromium metal on cyclotron targets from small amounts of solution Bright hard adherent deposits 0 008 to 0 010 in thick have been obtained over target surfaces $\frac{3}{4} \times 3$ in in area but thicker coatings appear to be difficult to obtain The reasons for the limitations are not evident Commercial plating practices are unsuitable since the necessity for efficient utilization of isotopic material limits cell size and also requires that plating solutions should be almost completely depleted of electrolyte

Salt Films

Exploratory work on the preparation of isotopically enriched targets by vacuum coating lithium sulfate on tantalum backings was carried out with T M Hahn of the University of Kentucky Thin films (5 to 10 μ in thickness) of normal Li_2SO_4 were prepared by evaporation from a resistance heated shallow tantalum boat operating at about 1000 C in a vacuum of less than 1 μ Hg

Several films of various thicknesses were prepared and submitted to T E Willmarth of the Microscopy Department of the ORNL Analytical Chemistry Division for evaluation His report indicates that the technique is suitable but that changes in procedure will give better uniformity and adherence

SEISMOGRAPH OPERATION

It is believed that occasional earth tremors have affected the behavior of sensitive instruments in this laboratory Also the use of seismographs as protective or warning devices associated with nuclear reactors might warrant study hence it was deemed advisable to install a simple inexpensive

instrument for the recording of both local and distant tremors

Suitable concrete piers and darkroom facilities for the installation of a Sprengnether series AR seismograph were completed and satisfactory operation of the instrument was achieved during April 1954 A number of earthquakes and earth disturbances have been recorded since then with epicenter distances up to 6000 miles The destructive disturbances in Greece during early May were recorded Included in this report is a seismogram (Fig 18) of two distinct shocks that occurred in the Gulf of California on April 27 1954 at 5 55 AM and 6 40 AM EST respectively

The interpretation of a seismogram is based on the fact that whenever there is an earthquake different types of vibrations travel in the form of waves from the focus of the quake These include two types of *body* waves as well as what are known as *surface* waves The body waves are the more important in interpreting records and they include the faster moving longitudinal *preliminary* (or *P*) waves and the slower moving transverse *secondary* (or *S*) waves These are sometimes called the push and shake waves respectively When these waves reach a seismograph of this particular type the vibrations are translated by means of a suspension galvanometer into a trace on photographic paper This is accomplished by having a collimated beam of light reflected from a mirror mounted off center on the galvanometer suspension As the galvanometer is moved by the shock the mirror rotates thereby causing the reflected light beam to respond to the vibrations

Since both the *P* and *S* waves leave the point of origin of the earthquake at the same time and the velocities of the preliminary and secondary waves through the earth have well known values (as determined rather accurately by seismologists) it is a relatively simple matter to calculate the distances of the epicenters from the location of the seismograph

For example in Fig 18 waves of small amplitude and relatively high frequency begin at *P* and *P* and continue for about 8 min [4] these are the *P* waves At *S* and *S* waves of lower frequency begin these are the *S* waves The distances between *S* and *P* (the so called *S-P* interval) correspond in these recordings to an epicenter about 1800 miles from the Stable Isotope Division instrument At Q and Q can be seen the beginning of the *surface* waves

Confirmation of observed seismic occurrences is provided by regular reports from the U S Coast and Geodetic Survey A reproduction of such a report is also included in Fig 18

MISCELLANEOUS

Measurements of the density of Li^6 were made by using the previously mentioned Li^6 targets prepared for the High Voltage Physics Section From the weights of metal in the containers (corrected for the oil film) and their volumes densities of 0 476 0 472 and 0 474 g/cc were obtained as compared to the theoretical density of 0 464 g/cc This variation is being investigated

PUBLICATIONS

Reports and papers in preparation or submitted for publication

1 P S Baker G F Wells [5] and W R Rathkamp [5] A Cell for the Preparation of Small Quantities of Alkali Metals Proof submitted for July issue of *Journal of Chemical Education*

2 P S Baker and W R Rathkamp [5] *Investigation of the Ranque-Hilsch (Vortex) Tube* ORNL 1659 (in press)

---

[4] Ea h se t on betwee the ve ti l bl k l nes ep esents t me nterv l of 1 m n The photog ph p pe s mo nt d o ot t ng d um wh h m kes o e omplete evol t on e h 30 m n a d move long ts ax s total of about 1/8 in per revolutio thus g ving er es of par llel lines

[5] M Spe t omet y Departme t

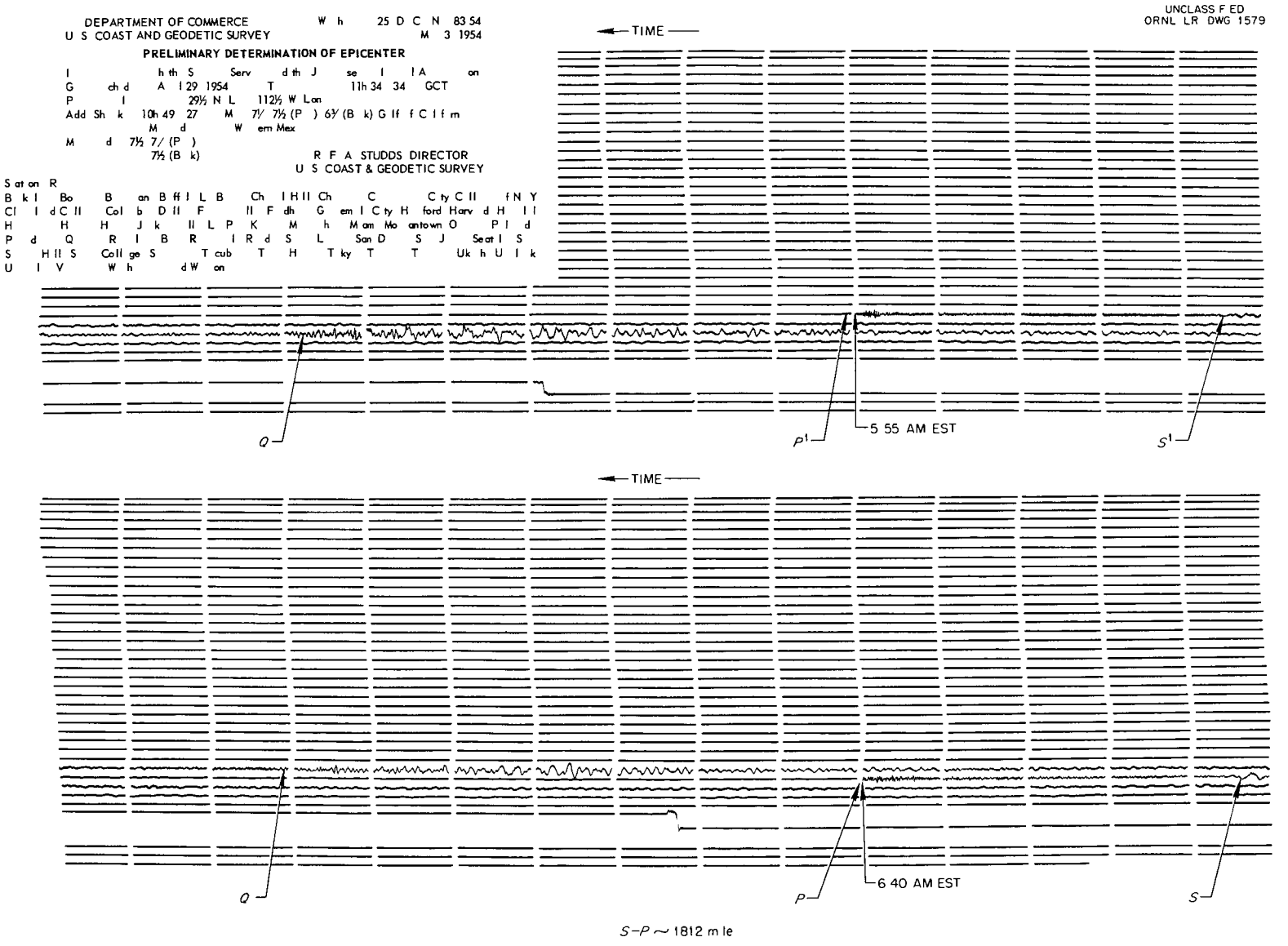

Fig 18 Seismogram for April 27 1954 Showing Record of Earthquakes in the Gulf of California

UTILIZATION OF ENRICHED STABLE ISOTOPES

It is of interest to view briefly the shipments and uses of enriched stable isotopes

Figure 19 illustrates the yearly shipments of electromagnetically produced isotopes since the first shipment in January 1946 In this figure are also listed the articles in *The Physical Review* that report on research accomplished by the use of isotopes supplied from the stable isotopes program Classified reports from within the activities of the AEC have not been surveyed but it is known that many classified experiments have been performed or are in progress in which enriched isotopes are essential

Table 25 summarizes in a general way the fields of research in which enriched stable isotopes are being used This is an analysis of *The Physical Review* articles listed on the graph in Fig 19

Figure 20 illustrates how stable isotope shipments are distributed among on project and off project recipients The period covered is from January 1946 to April 1954

Figure 21 shows the number of shipments of each element made in the period from January 1946 to April 1954

Among the uses of enriched stable isotopes the most prominent has been the discovery mass identification and study of the decay processes of artificially produced radioactive isotopes Enriched stable isotopes make it possible to establish the mass of the radioactive isotope which is produced and at the same time provide a more suitable activity which can be investigated more effectively than that present if the normal element were used as the starting material Figure 22 illustrates the many radioactive nuclides which have been produced from enriched stable isotopes many for the first time and which have had their identities and properties better studied

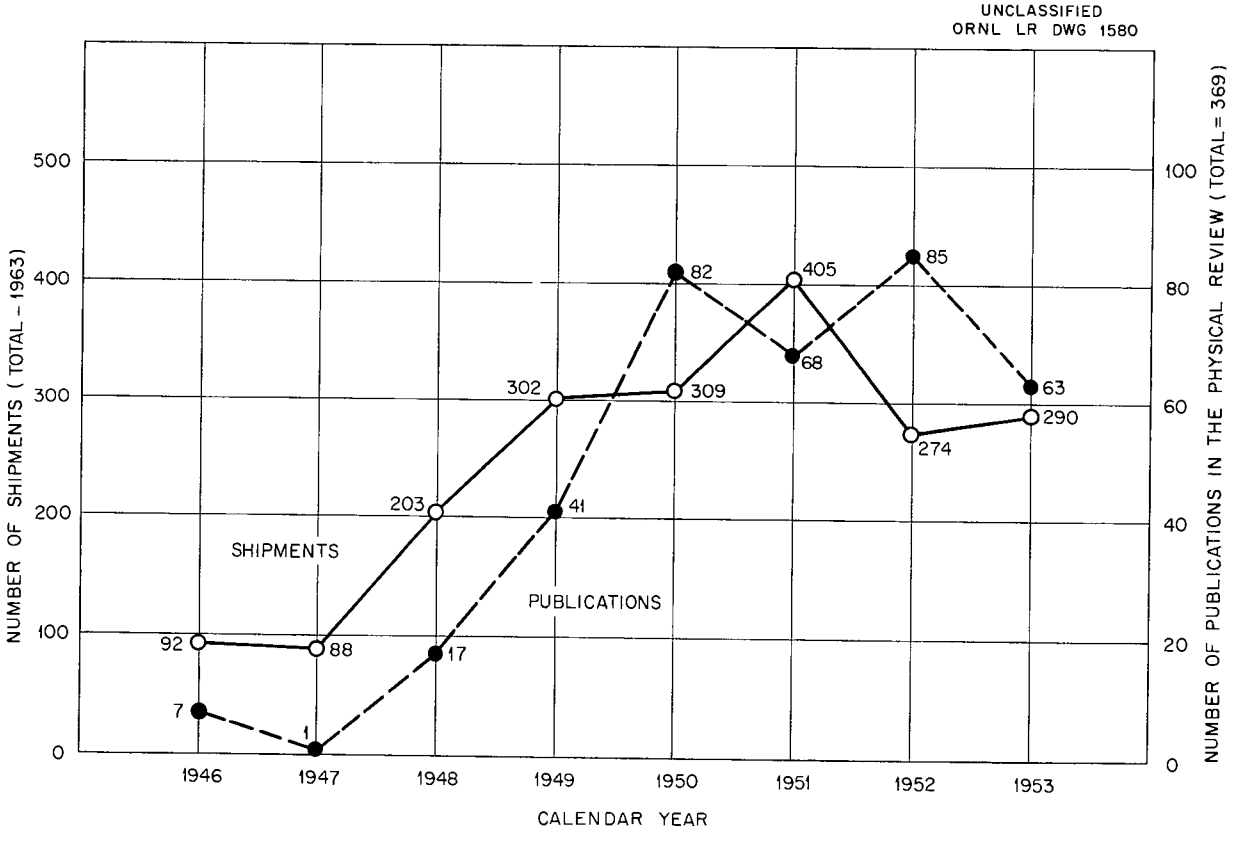

Fig 19 Shipments and Publications of Enriched Stable Isotopes 1946 to 1954

TABLE 25 PRINCIPAL FIELDS OF INVESTIGATION IN WHICH STABLE ISOTOPES WERE USED

FIELD	PERCENTAGE OF REPORTS
Inve t gat on of r d oa tive products	38
Invest gat ons of beta d sintegrations	13
Neut on cross sections bombardment studies	12
Hyperfine spectroscopy and isotope shifts	9
Studies of nuclear energy levels	6
Nuclear spins and magnetic moments	5
Isome sm and isobarism	4
Supe conductiv ty effects	4
Photographic emulsions for neutron detect on	3
Photoneutron and photoproton emission	2
Miscellaneous studies	4

Figure 23 shows how the number of elements and the number of enriched isotopes of these elements have steadily increased since the start of the stable isotope enrichment program The number of elements will reach 60 and the number of isotopes will be about 270 when all the elements having natural stable isotopes have been successfully processed

Table 26 gives a summary of the isotope shipments and requests that were made from November 20 1953 to May 20 1954

Table 27 is a list of the requests for isotopes that were not approved by the AEC Also shown is the reason for withholding approval

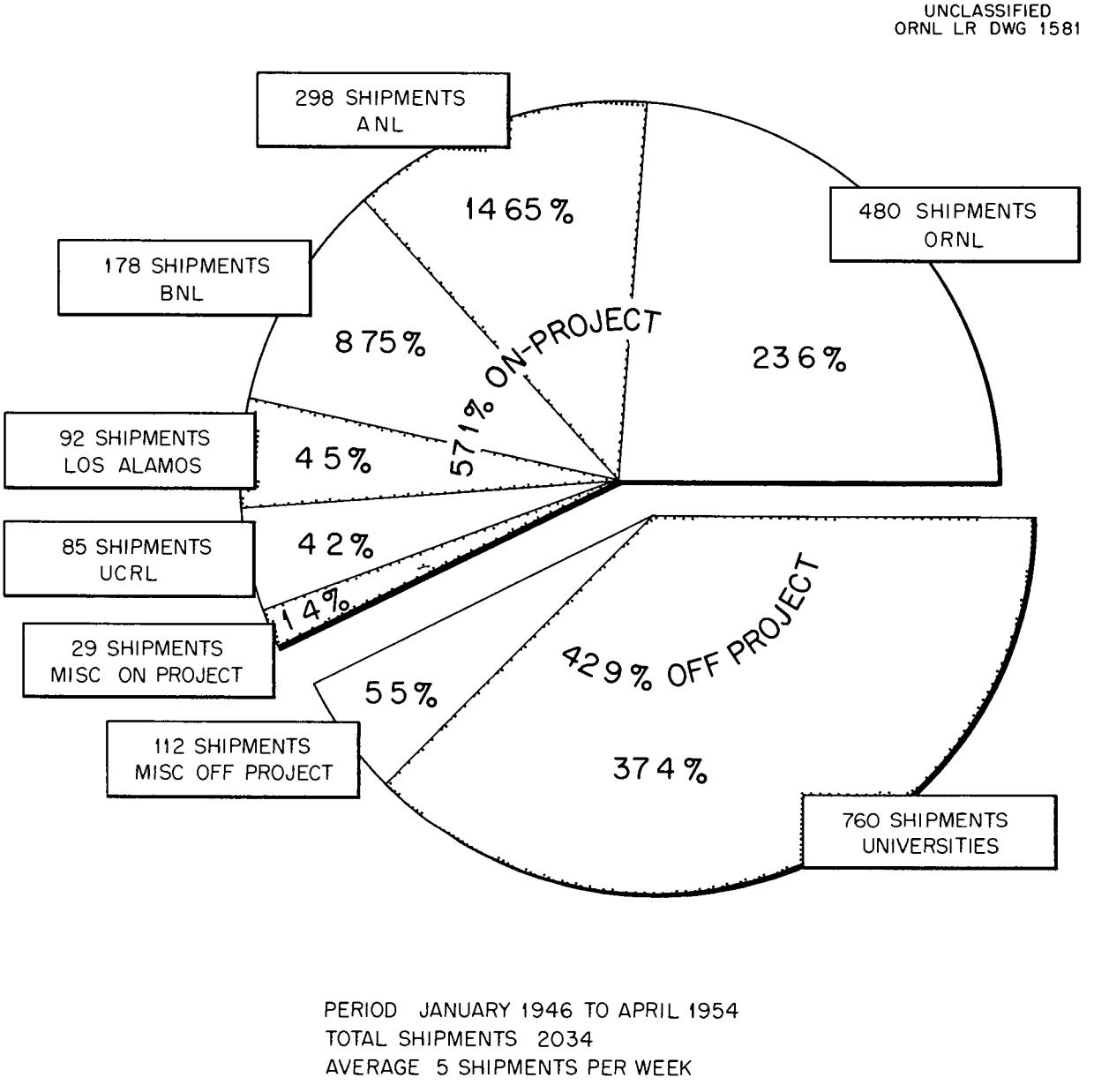

Fig 20 Distribution of Stable Isotope Shipments Among On Project and Off Project Recipients

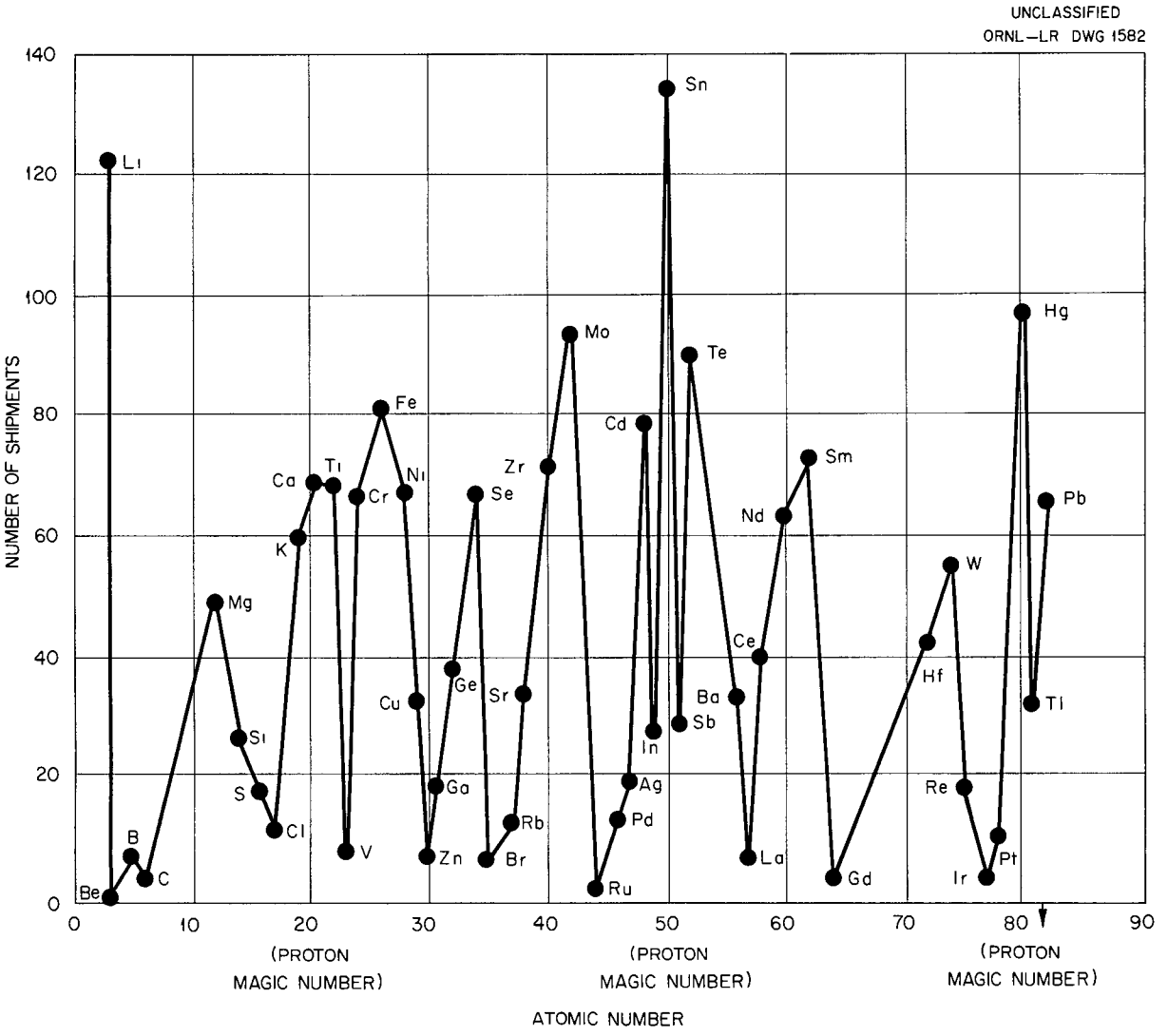

Fig 21 Shipments per Element for the Period January 1946 to April 1954

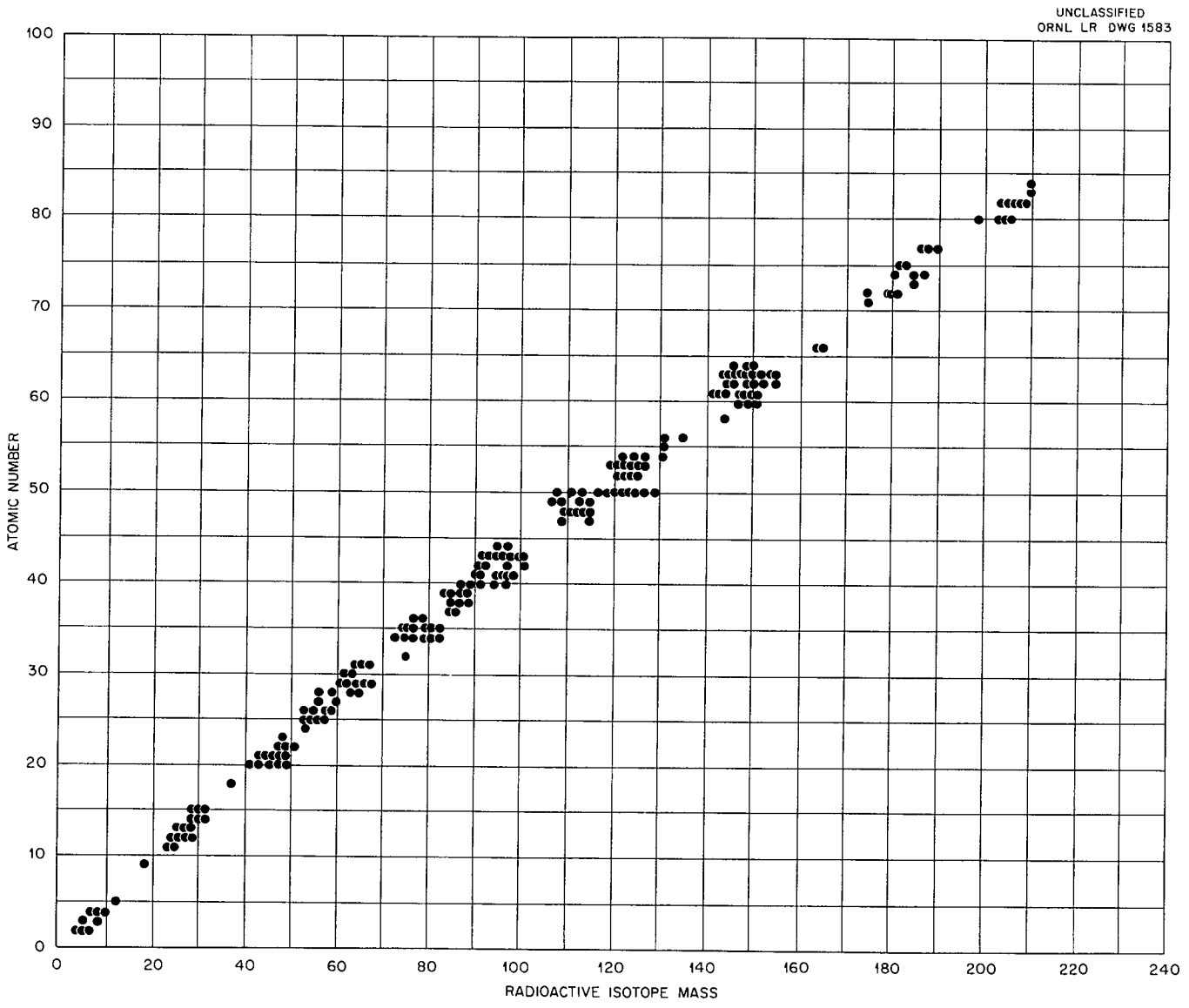

Fig 22 Radioactive Isotopes Produced from Enriched Stable Isotopes Which Have Been Identified and Their Properties Investigated

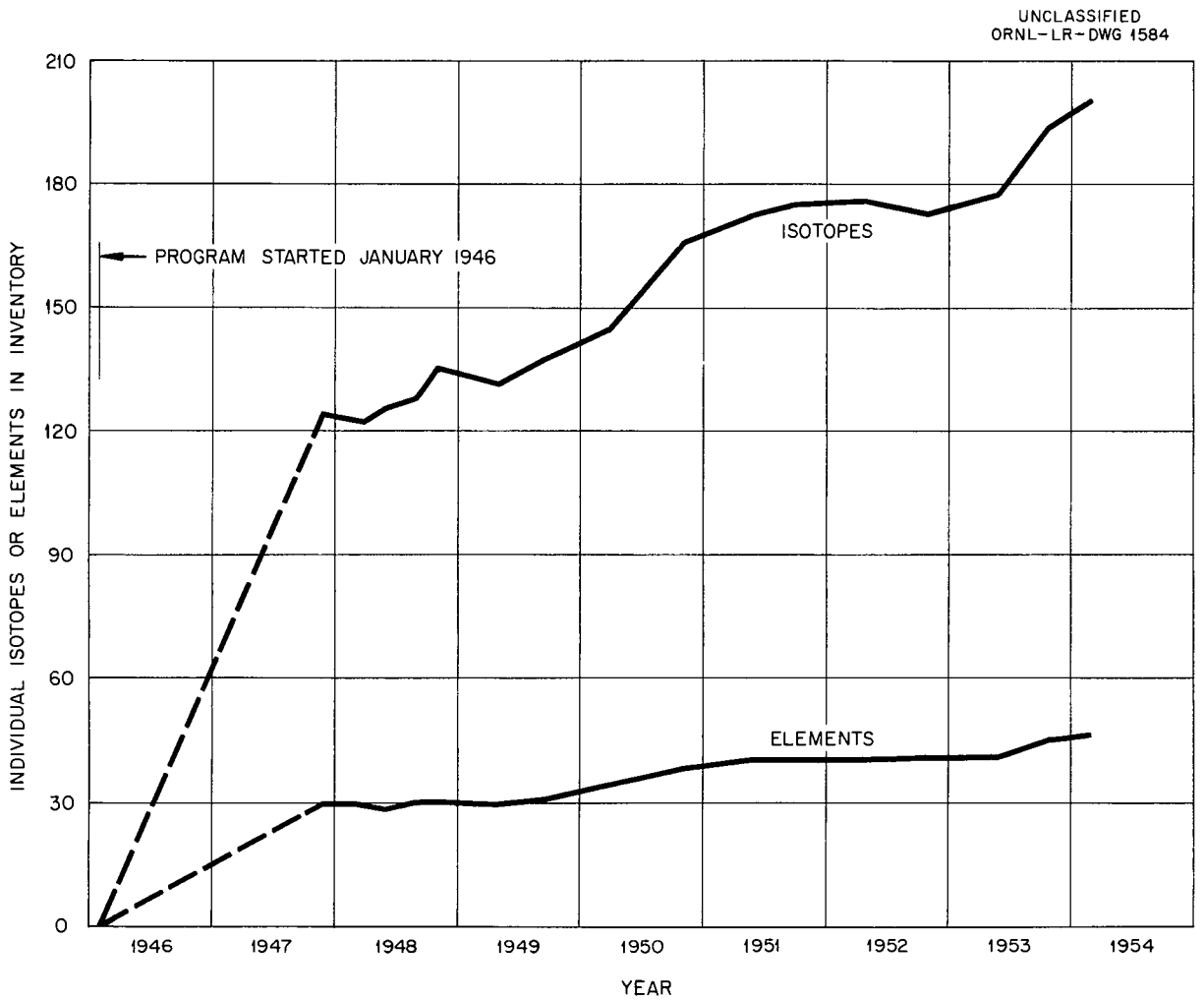

Fig 23 Growth of Stable Isotope Production Program Note reversals of trend result from temporary exhaustion of some samples through shipments

TABLE 26 SUMMARY OF ISOTOPE SHIPMENTS AND REQUESTS
NOVEMBER 20 1953 TO MAY 20 1954

REQUEST NO	REQUESTER	ISOTOPE	LOT NO	QUANTITY (mg)
	Sh pment Made			
B 4011S	A gonne N t on l Lobo atory	Pb^{206}	AQ 136(a)	11
B 3993	Massach setts Inst tute of Tech ology	Re^{185}	CP 356(a)	100
B 3994	Massachusetts Inst t te of Technology	Re^{187}	CP 357(a)	101
B 4001	Mass chusetts Institute of Technology	W^{182}	EL 562(a)	100
B 4002	Massa husetts I st tute of Technology	W^{183}	BG 222(a)	101
B 4003	Massachusetts Inst tute of Technology	W^{184}	BG 223(a)	101
B 4004	Massachusetts In t tute of Technology	W^{186}	EL 565( )	101
B 4006	Un ve ity of W scons n	Se^{76}	FG 655(b)	76
B 4007	Unive s ty of Wisconsin	Se^{77}	FG 656(f)	26
B 4008	Un ve ty of W scons n	Se^{82}	FG 659(b)	50
B 4009	Un ve s ty of W cons n	Mo^{98}	AW 168(a)	101
B 4010	Un versity of Wisconsin	Mo^{100}	AW 169(a)	26
B 3650	Westinghouse Electric Corporat on	Li^{6}	FY 745(bb)	502
B 4080S	B ookhaven Nat o l Labo atory	Cl^{35}	AV 161(cl)	18
B 4081S	Brookh ven Nat onal L borato y	Cl^{37}	DH 438(a)	26
B 4082S	B ookh ven National Labor tory	Pd^{102}	GG 770(a)	25
B 4083S	Brookh ven N t onal L bo to y	Pd^{104}	GG 771( )	25
B 4084S	B ookhaven Nat onal Labo to y	Pd^{105}	GG 772(a)	25
B 4085S	B ookh ven N t onal L borato y	Pd^{106}	GG 773( )	26
B 4095S	B ookh ven Nat o l L bo to y	Pd^{108}	GG 774( )	26
B 4086S	B ookh ven Nat onal L bo to y	Pd^{110}	GG 775(a)	25
B 3979	Duke Un ve s ty	L^{6}	ED 537(a)	64
B 4075	Ind na Unive s ty	Pb^{207}	EO 583(a)	202
B 4090	W sh ngto U ive s ty	Re^{185}	CP 356(a)	21
B 4091	Washington U ver ity	Re^{187}	CP 357(a)	10
B 4074S	Argonne National Laboratory	Pb^{204}	FQ 702(a)	2 002
B 4077S	O k Ridge Nat on l Labo atory	Gd^{156}	GK 801(a)	101
B 4156S	O k Ridge Nat o l Labo tory	W^{180}	DL 561(a)	10
B 4097	D vidso Manuf ctur ng Company	Hg^{202}	DR 490(ds)	105
B 4157S	Oak Ridge Nation l Labo atory	W^{182}	EL 562(a)	100
B 4158S	O k R dge N tional L bor to y	Cd^{110}	CE 316(a)	20
B 4159S	Oak R dge N t onal Labo to y	Cd^{111}	CE 317( )	351
B 4126	Washington Un ve s ty	T^{48}	EN 578( )	202
B 4131	Massa husetts Inst tute of Technology	Ca^{42}	EV 614(a)	20

TABLE 26 (cont nued)

REQUEST NO	REQUESTER	ISOTOPE	LOT NO	QUANTITY (mg)
	Sh pments M de			
B 4115	C n g e l stitut o of W h ngto	Fe^{57}	DL 453(f)	500
B 4116	Ca g e l t tut on of W h gton	Ge^{73}	FZ 749( )	500
B 4119	C neg e Inst tution of W sh ngto	Pb^{204}	EO 581(a)	200
B 4137	Cal fo n a Instit te of Te hnology	Mg^{24}	BZ 288(c)	50
B 4138	Cal fo n l st tute of Tech ology	Mg^{25}	DZ 520(a)	50
B 4139	Cal iforn a Instit te of Technology	Mg^{26}	P 49(a)	50
B 4079S	Oak R dge National Laboratory	Gd^{158}	GK 803(a)	100
B 4177S	Oak R dge National Labo tory	Li^{7}	FI 668(i)	4 500
B 4145S	B ookhaven I at onal L bo atory	Sn^{112}	FS 710(a)	62
B 4144S	Brookhaven Nat onal Laboratory	In^{115}	ER 595(ar)	3 000
B 4146S	Brookhaven National Laboratory	In^{113}	ER 594(a)	293
B 3859	C rneg e Institute of Te hnology	Pt^{190}	GH 776(a)	50
B 3863	Carnegie Institute of Technology	Hg^{196}	ER 485(c)	151
B 4182	low State College	K^{41}	EY 626(e)	20
B 4188S	Argonne Nat o al Laboratory	Ce^{136}	FR 706(a)	10
B 3398	Duke University	K^{41}	EX 623(e)	840
B 4216S	Brookhaven National Laboratory	Ir^{191}	GL 810(a)	26
B 4217S	Brookhaven National Laboratory	Ir^{193}	GL 811(a)	25
B 4058	Bartol Research Foundation	Ir^{193}	GL 811(a)	51
B 4163	Ba tol Research Found tion	Pd^{102}	GG 770(a)	200
B 4193	Mass chusetts Instit te of Technology	Pt^{194}	GH 778(a)	101
B 4194	Massachusetts Institute of Technology	Pt^{195}	GH 779(a)	100
B 4195	Massach setts Institute of Technology	Pt^{196}	GH 780(a)	101
B 4196	Massachusetts Institute of Technology	Pt^{198}	GH 781(a)	100
B 4112	State U ivers ty of Iowa	L^{7}	FI 668(i)	1 000
B 3960	Harvard University	Tl^{203}	CF 3 322(a)	416
B 4201	Harvard University	Tl^{203}	BY 3 286(a)	323
B 4202	Harvard Un versity	Tl^{205}	BX 285(a)	101
B 4200	U versity of Michigan	Cd^{110}	CE 316(a)	400
B 4235	C rnegie Institut on of Washington	B^{11}	FV 735(a)	200
B 4198	Ohio State University	Nd^{143}	GI 784(a)	201
B 4199	Oh o State Un versity	Nd^{144}	EQ 589(ar)	200
B 4228S	A gonne Nat onal L boratory	Ce^{136}	FR 706(a)	10

TABLE 26 (continued)

REQUEST NO	REQUESTER	ISOTOPE	LOT NO	QUANTITY (mg)
	Shipments M de			
B 4227S	Argonne National Laboratory	Nd^{142}	EQ 587(a)	10
B 4268S	Oak R dge Nat onal Laboratory	Pd^{102}	GG 770(a)	55
B 4269S	O k Ridge Nat o al L boratory	Pd^{104}	GG 771(a)	50
B 4111	State Un vers ty of Iowa	L^{6}	FY 745(bc)	25
B 4214	Columb a Unive sity	Te^{126}	CA 297(a)	50
B 4240	Boston Unive s ty	S^{34}	ES 598(a)	100
B 4078S	Oak Ridge National L boratory	Gd^{157}	GK 802(a)	102
B 4289S	Oak Ridge National Laboratory	Nd^{142}	EQ 587(r)	100
B 4262	Massachusetts Inst tute of Technology	C^{43}	FO 691(a)	100
B 4220	Oh o State University	Pd^{106}	GG 773(a)	201
B 4221	Ohio State Univers ty	Pd^{110}	GG 775(a)	201
B 4231	University of Illino s	L^{6}	FY 745(be)	210
B 4014S	Oak Ridge Nat onal Laborato y	Li^{6}	FY 745(be)	11 000
B 4190S	Brookh ven Nat onal Laboratory	C^{42}	FF 649(a)	50
B 4261	Iowa St te College	Hf^{180}	GP 830(a)	16
B 3830S	Oak Ridge National Laboratory	Ru^{96}	GJ 790(a)	101
B 4076S	O k R dge National Laboratory	Gd^{155}	GK 800(a)	102
B 4062	Bartol Resea ch Found tio	Pt^{196}	GH 780(a)	101
B 4226S	Argon e Nat o al Labor tory	Pb^{204}	CN 349(ar)	357
B 4061	Bartol Research Fo ndation	Pt^{194}	GH 778(a)	201
B 4304	C neg e In t tut o of Wa h ngto	Zn^{67}	EK 558(a)	147
B 4305	Carnegie Institution of Washington	Ag^{107}	S U 41(br)	200
B 4294S	Argonne Nat on I L bo atory	Ce^{136}	FR 706(a)	21
B 3903S	Argonne Nat onal L boratory	Ru^{96}	GJ 790(a)	10
B 4333	Ca neg e Instit t on of Wash ngton	S^{87}	FL 681( )	70
B 4357S	Oak Ridge Nation I Laboratory	Ce^{140}	FR 708(a)	10
B 4321S	Oak Ridge Nat on I Laboratory	Li^{6}	FY 745(bd)	2 000
B 4324S	Oak Ridge National Laboratory	Gd^{154}	GK 799(a)	105
B 4335	Bartol Research Foundation	Ce^{150}	FR 708(a)	50
B 4361	Carneg e Institution of W sh ngton	Sm^{147}	GM 814(a)	201
B 4360	Ca neg e Institution of Wash ngton	Nd^{145}	EQ 590(a)	188
B 4374S	Oak Ridge N t o al Laboratory	Ce^{138}	FR 707(a)	10
B 4375S	Oak Ridge National Laboratory	Ce^{136}	FR 706(a)	10
B 4338	State U ivers ty of Iowa	Ni^{60}	K 34(a)	101
B 4339	State Uni ersity of Iowa	Ni^{58}	DF 422(a)	100

TABLE 26 (continued)

REQUEST NO	REQUESTER	ISOTOPE	LOT NO	QUANTITY (mg)
	Sh pments Made			
B 4348S	Brookhaven Nat onal Laboratory	Ag^{107}	EA 522(a)	1 092
B 4396S	Los Alamos Scientif c Laboratory	Cr^{54}	CD 312(a)	50
B 4388S	Los Alamos Scientif L boratory	Ga^{69}	EI 554(a)	150
B 4385	Bartol Research Fo ndat on	C^{12}	FD 638(h)	43
B 4385	Bartol Research Fo ndat o	C^{12}	FD 638(a$_1$)	60
B 4386	Bartol Rese rch Foundat on	Li^{6}	GD 764(e)	50
B 3872	Columbia Un vers ty	K^{41}	EY 626(e)	50
B 4329	Flor da State Univers ty	Ti^{50}	GA 756(a)	501
B 4384	Naval Research Laboratory	Re^{185}	CP 356(a)	252
B 4439S	Oak R dge Nat ional Laboratory	Gd^{160}	GK 804(a)	7 023
B 4437S	Oak R dge Nat ional Laboratory	Sm^{147}	GM 814(a)	2 002
B 4438S	Oak Ridge Nat ional Laboratory	Sm^{149}	FH 663(a)	202
B 4433S	Brookhaven Nat ional Laboratory	Nd^{143}	GI 784(a)	2 005
B 4434S	Brookhaven Nat ional Laboratory	Nd^{145}	GI 786(a)	2 005
B 4435S	Brookh ven Nat onal Laboratory	Ba^{135}	FU 730(a)	2 002
B 4436S	Brookhaven Nat ional Laboratory	Ba^{137}	FU 732(a)	2 000
B 4424	Carnegie Institution of Wash ngton	Nd^{143}	EQ 588(a)	103
B 4425	Car eg e Inst t t on of Wash gton	Ag^{109}	EA 523(a)	203
B 4426	C neg e In t tut on of W shington	Sm^{149}	FH 663(a)	204
B 4118	C negie Inst tution of Washington	Hf^{176}	GP 826(a)	202
B 4410	Naval Research Laboratory	Te^{123}	FE 642(a)	82
B 4408	Nav l Rese rch Laboratory	Sr^{86}	Z 78(a)	37
B 4404	Univers ity of Mich igan	Ti^{49}	GA 755(a)	105
B 4381	Duke Univers ity	Hg^{202}	DR 490(h)	4 200
B 4445	Duke Un vers ty	Ce^{142}	FR 709(a)	5 046
B 4380	Duke Univers ity	Cl^{37}	FW 737(b)	4 516
B 4379	Duke Un vers ty	Pb^{207}	EO 583(a)	4 001
B 4128	N t onal Bu eau of Standards	Cu^{63}	FJ 673(a)	5 001

TABLE 27 REQUESTS FOR ISOTOPES NOT APPROVED BY AEC

ALLO CATION NO	APPLICANT	ISOTOPE	AMOUNT (mg)	REASON FOR AEC WITHHOLDING APPROVAL	STATUS IN PRODUCTION SCHEDULE
B 2333	Pr n eton Un ve ty	Gd^{152}	50	Not yet va lable	In p ocess est mated complet o J ne 1954
B 2577S	Un ve ty of Cal fo n	Gd^{152}	10	Not yet va lable	In p o e est m ted omplet on June 1954
B 3290	Yale Un ve s ty	Gd^{152}	100	Not yet ava l ble	In p oce s est m ted omplet on J ne 1954
B 3862	Ca neg e Inst tute of Te hnology	Gd^{152}	1000	Not yet ava l ble	In p o ess est m ted complet o June 1954
B 4174	P n eton Un ve s ty	Gd^{152}	50	Not yet ava lable	In p oce s e t mated omplet o June 1954
B 2556S	U ve ty of C l fo n	Gd^{154}	10	Not yet av lable	In pro ess est m ted complet on J ne 1954
B 3291	Y le U ve s ty	Gd^{154}	100	Not yet ava lable	In p o es est mated complet on J ne 1954
B 4173	P nceton Un ve ity	Gd^{154}	50	Not yet ava lable	In p oce s e t mated omplet on J ne 1954
B 4313	B ookhaven N t o al L bo ato y	Gd^{155}		Not yet a a lable	In proce s e t mated omplet o J ne 1954
B 4314	B ookhave Nat o al L bo to y	Gd^{155}		Not yet ava l ble	In p o es est m ted complet on J ne 1954
B 4369	Ca neg e Inst tut on of W sh gton	Gd^{155}	200	Not yet ava lable	In p ocess est m ted complet on J ne 1954
		Gd^{157}			
B 3069	U e ty of M ch g n	Gd^{158}	100	Fu ther nfo m t on needed f om appl cant	
B 2581S	A go ne Nat onol L bor to y	Mo^{94}	600	Not yet available	
B 3018	Un ve s ty of Rocheste	Z^{96}	200	Not yet ava lable	In p ocess e t m ted complet on May 1954
B 3222	Ma sachu etts Inst tute of Te hnology	Z^{96}	100	Not yet av l ble	In process est m ted complet o May 1954
B 3417	M ss husetts In t tute of Technology	Z^{96}	250	Not yet v lable	I p ocess est mated omplet o May 1954
B 4063	Ba tol Resea h Foundat on	Z^{96}		Not yet av lable	In p ocess est m ted complet o M y 1954
B 4215	Col mb a U iver ity	Z^{96}	50	Not yet ava lable	In p oce s estim ted complet on May 1954
B 4285	Unive ty of A kansa	N^{58}	3000	Awa t ng clar f cation conce n ng MTR rradiation	
B 3249S	B ookh ven N tio al Labo ato y	N^{64}	50	Not yet ava lable	
B 3954	Columbia Un e ty	Ni^{64}	100	Not yet av lable	

TABLE 27 (ont ued)

ALLO CATION NO	APPLICANT	ISOTOPE	AMOUNT (mg)	REASON FOR AEC WITHHOLDING APPROVAL	STATUS IN PRODUCTION SCHEDULE
B 3780	Joh H pk U e ty	Rb^{85}	700	Not y t v l ble	
B 3897	Yole U ty	C^{48}	100	N t yet l ble	
B 4310	W h gt n U ty	C^{48}	1000	N t yet v l ble	
B 3917	St nf d U e ty	S^{33}	50	Aw t ng l f t t fo m nd q t ty	
B 3934	Un ty of W o	Sm^{144}	250	Not y t l ble	l p o e e t m t d mplet on J ly 1954
B 3978	D ke U ty	O^{17}		Not yet v l ble	
B 4395	Ph l p M & C	O^{18}		Not y t l bl	
B 3988	M h tt l t t te of T h ol gy	Hf^{176}	100	N t y t l bl	
B 3989	M h ett l t t t of T h l gy	Hf^{177}	100	Not y t l bl	l p o t m ted mpl t o M y 1954
B 3990	M h ett l t t t of T h l gy	Hf^{178}	100	Not y t l ble	
B 3991	M h ett l t t t of T h ol gy	Hf^{179}	100	Not yet l bl	l p o e t m ted ompl t on M y 1954
B 3992	Ma h tt l t t t of T h logy	Hf^{180}	100	Not yet l bl	
B 4022	Oh o St t U ty	Fe^{54}	1000	Not y t v l bl	
B 4025	U v ty f K mt ky	L^{6}		Aw t g f m t o f om ppl t	l p ep o e g – e t m ted om pl t M y 1954
B 4113	Ca neg l t t t f W h gto	V^{50}	500	Not y t l bl	
B 4218	A go N t l L bo t y	R^{104}	10	Not y t l bl	l p o t m t d mplet on A g t 1954
B 4330	Columb U ty	I^{113}	5000	N t y t l bl	
B 4367	Oh o St t U ty	He^{3}		Aw t g v w by W h gto off	
B 4414	U ve ty of T	C^{63}	500	H ld pe d g lo g m t	
B 4413	U v ty f Te	C^{65}	500	H ld pe d g loa g m t	
B 4419	A go ne N t o l L bo t y	Z^{70}		Not y t l bl	
B 4393	St te U e ty f l w	B^{11}	75	Aw t g l f t by q t	

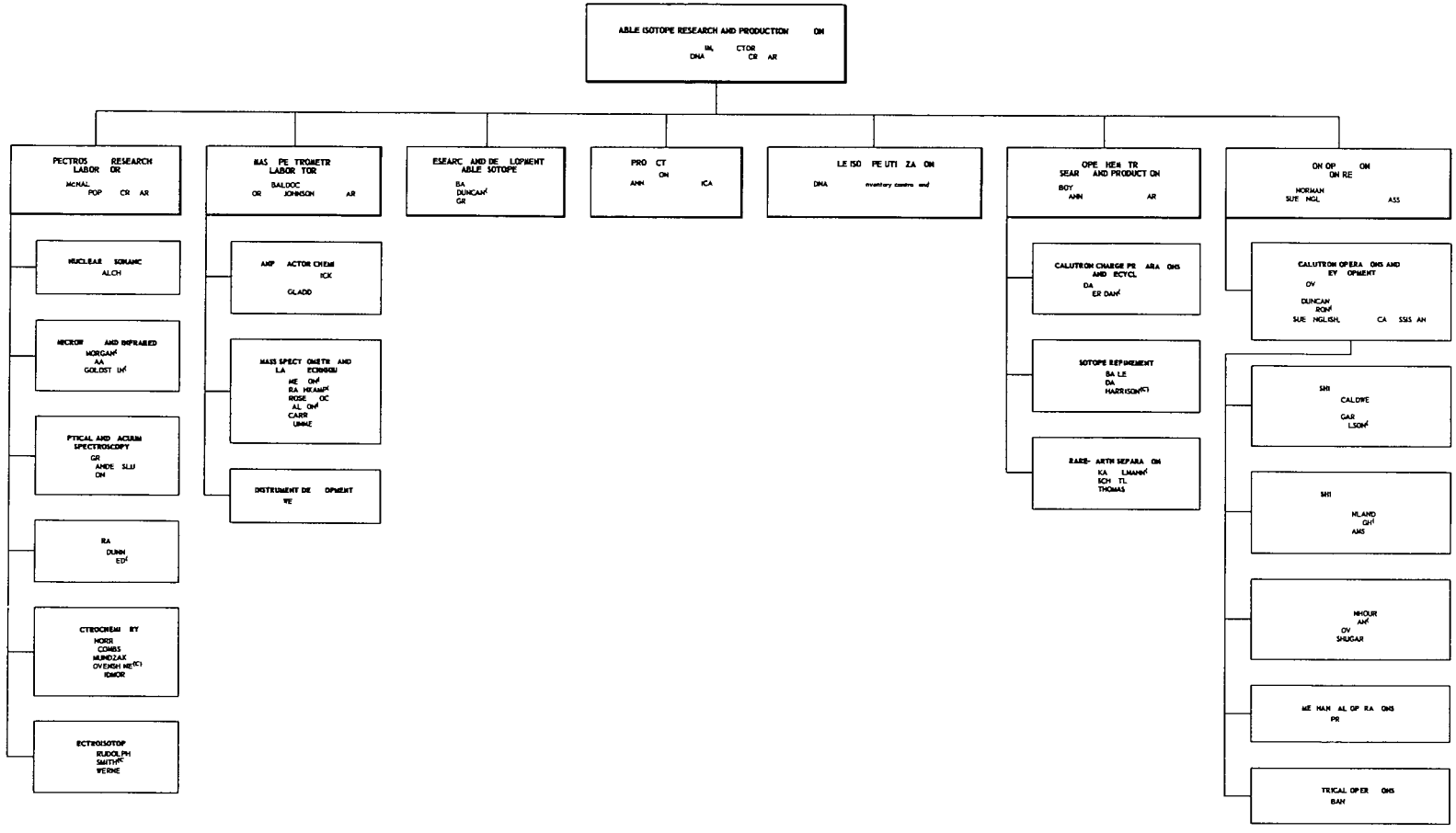

DUA ING
[2]CONSUL ANT

[C]CHEMIS
NG NE
PHY ICI
OR LABORA ORY CHN AN