UNCLASSIFIED

CENTRAL RESEARCH LIBRARY
DOCUMENT COLLECTION

MARTIN MARIETTA ENERGY SYSTEMS LIBRARIES
3 4456 0360707 8

ORNL 1735
Chemistry

4

GRAPHITE AND ALUMINUM-BLOCK, SOLUTION EVAPORATORS

C. D. Susano

CENTRAL RESEARCH LIBRARY
DOCUMENT COLLECTION

LIBRARY LOAN COPY

DO NOT TRANSFER TO ANOTHER PERSON

If you wish someone else to see this document, send in name with document and the library will arrange a loan.

OAK RIDGE NATIONAL LABORATORY
OPERATED BY
CARBIDE AND CARBON CHEMICALS COMPANY
A DIVISION OF UNION CARBIDE AND CARBON CORPORATION

UCC

POST OFFICE BOX P
OAK RIDGE, TENNESSEE

UNCLASSIFIED

ORNL 1735

Copy No 4

GRAPHITE AND ALUMINUM-BLOCK, SOLUTION EVAPORATORS

C D Susano

ANALYTICAL CHEMISTRY DIVISION

M T Kelley, Director
C D Susano, Associate Director

June 4, 1954

JUL 6 1954

OAK RIDGE NATIONAL LABORATORY
Operated by
CARBIDE AND CARBON CHEMICALS COMPANY
A DIVISION OF UNION CARBIDE AND CARBON CORPORATION
Oak Ridge, Tennessee

Contract No W-7405-eng-26

3 4456 0360707 8

INTERNAL DISTRIBUTION

1 C E Center
2 Biology Library
3 Health Physics Library
4-5 Central Research Library
6 Reactor Experimental Engineering Library
7-11 Laboratory Records Department
12 Laboratory Records, ORNL R C
13 C E Larson
14 L B Emlet (K-25)
15 J P Murray (Y-12)
16 A M Weinberg
17 J A Swartout
18 W H Jordan
19-22 E J Murphy
23 D S Hawxhurst
24 G E Boyd
25 E D Shipley
26 R A Charpie
27 J A Lane
28 F L Culler
29 E H Taylor
30 G H Clewett
31 M T Kelley
32 D S Billington
33 J H Frye, Jr
34 R S Livingston
35 C P Keim
36 A Hollaender
37 S F Carson
38 K Z Morgan
39 A H Snell
40 W E Cohn
41 N E Tolbert
42 C J Collins
43 M A Bredig
44 K A Kraus
45 C H Secoy
46 W R Grimes
47 K B Brown
48 R H Lafferty (K-25)
49 L E Burkhart (Y-12)
50 B S Weaver
51 H P House
52 J C White
53 O Menis
54 L J Brady
55 W F Vaughan
56 A F Roemer, Jr
57 E C Lynn
58 P V Hoffman
59 J R Lund
60 R L McCutchen
61 A S Meyer, Jr
62 C K Talbott
63 J J McCown
64 C R Williams
65-68 C D Susano
69 M J Skinner

EXTERNAL DISTRIBUTION

70 R F Bacher, California Institute of Technology
71 Division of Research and Medicine, AEC, ORO
72-316 Given distribution as shown in TID-4500 under Chemistry category

DISTRIBUTION PAGE TO BE REMOVED IF REPORT IS GIVEN PUBLIC DISTRIBUTION

GRAPHITE AND ALUMINUM-BLOCK, SOLUTION EVAPORATORS

ABSTRACT

Equipment has been designed and fabricated which speeds up the evaporation of solutions contained in crucibles, casseroles and dishes without loss due to localized overheating

Evaporators are fabricated from solid aluminum metal or graphite blocks by the simple process of making apertures in the material so that the vessel is held above the liquid level, at a distance of 1/8 to 1/4 inch above the surface of the heating unit

Evaporators made out of solid graphite are more efficient than similar evaporators made out of solid or sheet aluminum metal

GRAPHITE AND ALUMINUM-BLOCK, SOLUTION EVAPORATORS

The evaporation of aqueous solutions which are in contact with solid matter, perhaps the most common of all operations encountered in the analytical chemistry laboratory, has always been a particularly difficult and exasperating problem The use of sand baths was at one time, for lack of a better method, the most recommended method for this type of operation, but since the advent of electric hot plates this device became virtually obsolete At best, sand baths are not completely satisfactory, consequently, this method was not held in high regard, particularly because loose sand grains always presented a possible source of contamination in addition to being a serious safety hazard if solutions were spilled onto the hot sand In a large measure, this problem of evaporation was solved for the particular case when one is concerned with the evaporation of solutions, with or without a solid phase, when the materials are contained in beakers, by the development of the so-called Fisher-Maroney, No-Bump, Solution Evaporator (1)

Since the Fisher evaporator is so efficient, consideration was given to the possibility of devising a modification of this apparatus to the evaporation of solutions which are contained in dishes and in crucibles Further consideration was also given to the charring of filter papers accompanying moist precipitates, another technique common to gravimetry At first, it was believed that a simple modification of the design of the Fisher evaporator would prove adequate for the purpose and, as a consequence, an evaporator made of relatively heavy-gauge sheet aluminum was designed and tested This design was not satisfactory in that localized

overheating and subsequent "bumping' occurred Modified evaporators of solid aluminum metal and sheet steel were also designed, made and tested A variety of the designs of evaporators which were fabricated out of aluminum metal and steel is shown in Figure 1 The modified evaporators which were fabricated from solid aluminum proved to be quite satisfactory for the purpose intended, but further experimentation with a modified evaporator fabricated out of solid graphite proved to be even more efficient and most satisfactory

As a consequence of these tests, several graphite-block evaporators of different design were fabricated and have been used over a period of a year in a large number of operations--perhaps several thousand times

The evaporators are made by simply making apertures in solid graphite or metal The diameter of the apertures is made such that the crucible or dish is held a distance of 1/8 inch to 1/4 inch above the heating surface For best operation, the height of the block, or thickness, is of such dimension that the solution or liquid level is slightly below the periphery of contact between the evaporator and the container Evaporations may be conducted safely and with rapidity even though the periphery of contact may be below the liquid level

It can be stated without qualification that the incidence of "bumping and subsequent mechanical losses due thereto have been completely eliminated by the use of these block evaporators In addition to the improved characteristics of the process, evaporations have proved to be exceedingly fast In all cases, the time of evaporation has been reduced by as much as a factor of two to three times, and even much more, depending on the quantity of solids contained in the vessel

This equipment has been used in operations involving the evaporation and boiling of solutions of high boiling point, such as perchloric and sulfuric acids, and in contact with relatively large quantities of solid matter without incident No concern need arise over accidental spills or contact of perchloric acid with graphite since these two materials are inert toward each other As a matter of fact, evaporations involving perchloric acid have been carried out with the graphite-block evaporators in large numbers wherein occasional contact of perchloric acid and the graphite has occurred without incident If it becomes necessary to remove adhering contaminants, the evaporators may be rinsed in water or other cleansing solution, then dried before reuse The decomposition of SiO_2 in the usual $HF-H_2SO_4$ treatment of residues may be accomplished with speed and completely unattended, without fear of loss of matter due to localized overheating and "bumping ' Modified evaporators have also proved to be very useful in the burning off of filter papers in the usual gravimetric technique This latter technique can be improved even more so by the combined use of the block evaporator and infrared lamps Combinations of moist precipitates and filter paper in crucibles may be dried and burned at the full heat of hot plates when graphite-block evaporators are used

Graphite-block or aluminum-block evaporators may be made with any number of apertures, from one aperture up to the full capacity of the hot plate It is a simple matter to make such evaporators suitable for use with platinum, glass or porcelain dishes, casseroles and crucibles Gang evaporators may be designed with a variety of apertures for multiple operations In addition, if it is so desired, block evaporators may be constructed as an integral part of hot plates regardless of shape

An example of large-scale evaporations is shown in Figure 2 In this particular operation, perchloric acid is being used with hydrofluoric acid in the dissolution of a silicate rock A total of 30 evaporations is being performed at the same time with two 15-gang, graphite-block evaporators on an electric hot plate which has a rated capacity of 8600 watts Those evaporations with the higher intensity of fumes, on the left-hand side, are at the fuming stage Examples of gang evaporators of different sizes and capacities are shown on both sides of the hot plate

Other examples of the uses of block evaporators are shown in Figure 3 Examples of 2- and 4-gang evaporators for use with crucibles are shown on the left-hand side To the right is shown a 4-gang evaporator being adapted to the combined action of the charring of filter papers and drying of moist precipitates in Vycor crucibles The infrared lamp, although not absolutely essential, speeds up the process more so than that which is achieved by the use of either method independently of each other

A variety of multiple-gang, graphite-block evaporators suitable for a variety of uses is shown in Figure 4

Isometric drawings of 4-gang, block evaporators suitable for use with three different types of laboratory ware are shown in Figures 5, 6 and 7 Other modifications to fit specific requirements are obvious It is to be noted that the diameter of the apertures need not be held to stricter tolerance other than is necessary to hold the vessel about 1/8 to 1/4 inch above the surface of the heating unit

ACKNOWLEDGMENTS

The writer acknowledges the assistance of Messrs J C White, J W Robinson, W F Vaughan and H H Willard in the design, development and testing of these evaporators

REFERENCES

1 Catalog No 2-542, p 74, Modern Laboratory Appliances, Fisher Scientific Co , Pittsburgh, Pa (1952)

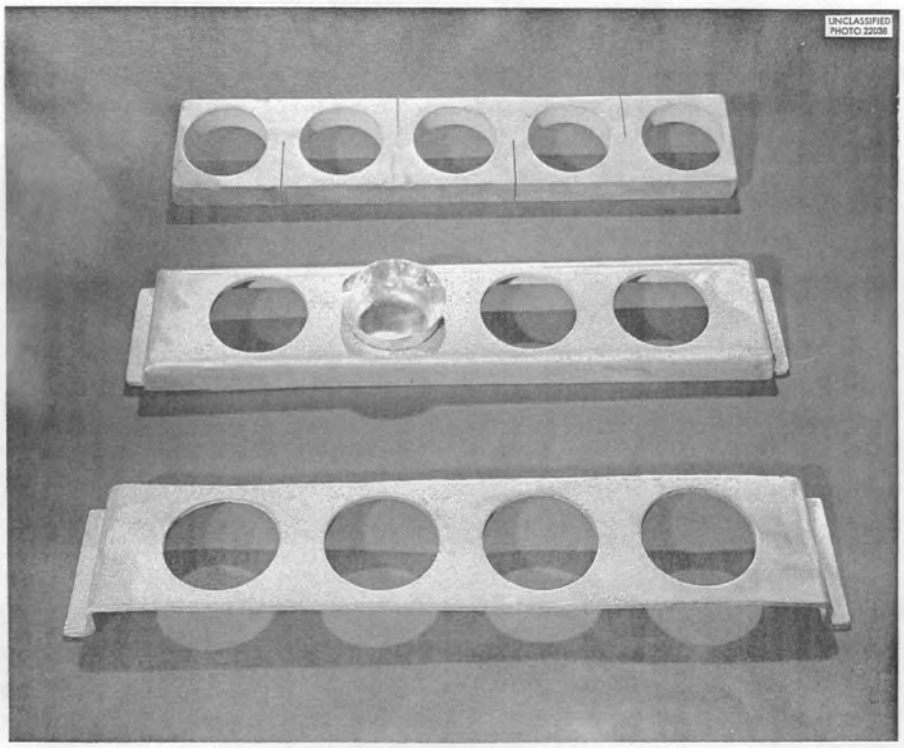

FIGURE 1
DIFFERENT DESIGNS OF ALUMINUM METAL, SOLUTION EVAPORATORS

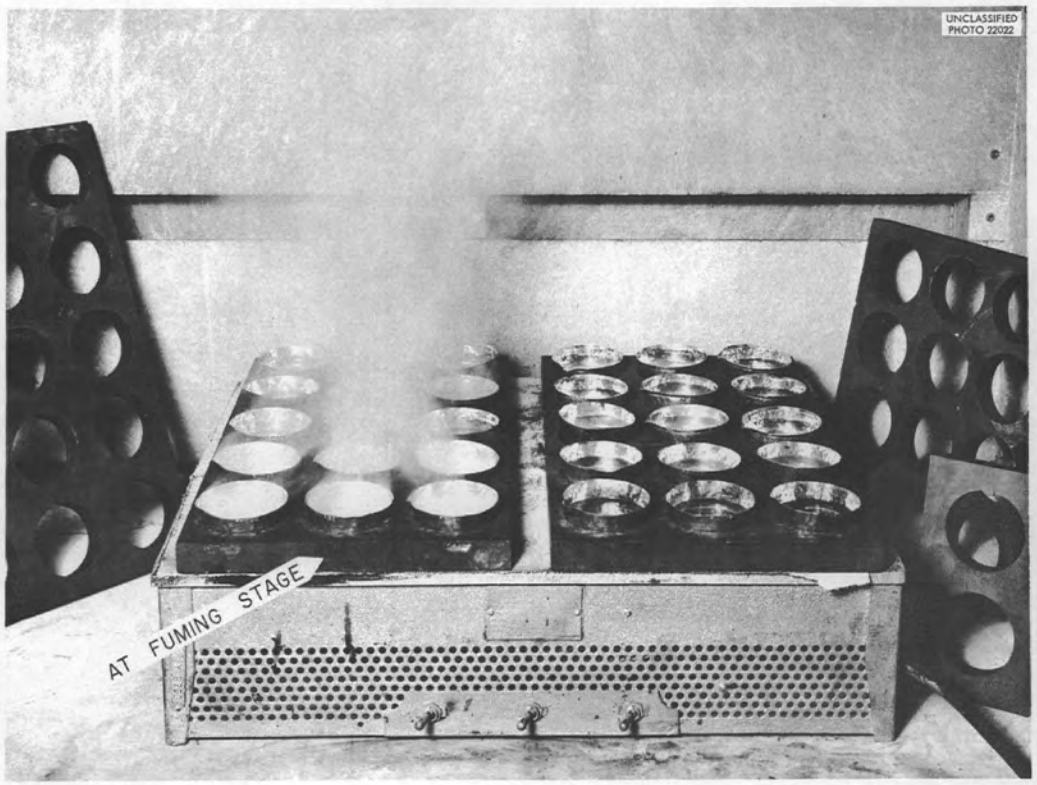

FIGURE 2
GRAPHITE - BLOCK, SOLUTION EVAPORATORS
Multiple - Gang Blocks In Large Scale Use

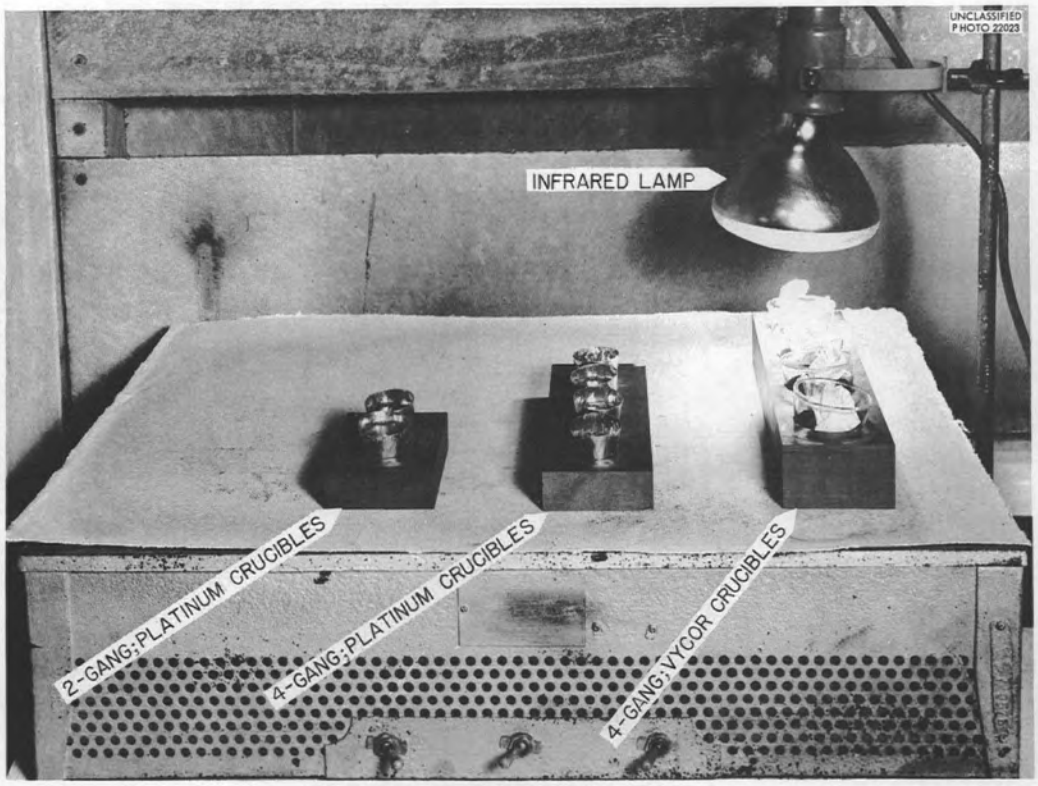

FIGURE 3
GRAPHITE-BLOCK, SOLUTION EVAPORATORS
Examples Of Uses With Crucibles

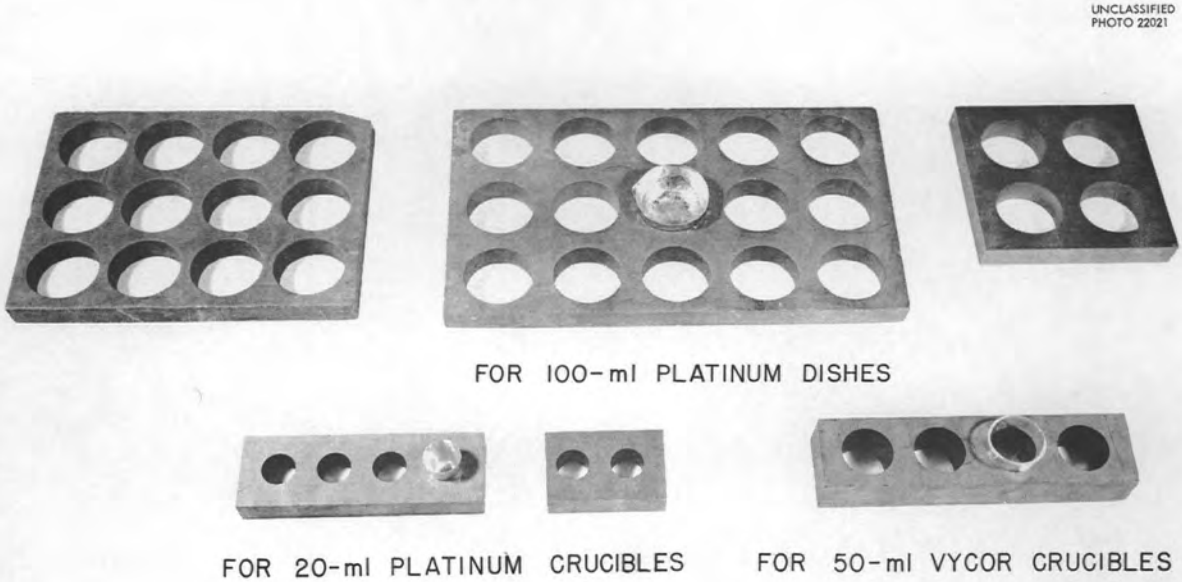

FIGURE 4
GRAPHITE-BLOCK, SOLUTION EVAPORATORS
Examples Of Multiple-Gang Blocks

UNCLASSIFIED
ORNL LR DWG 1682
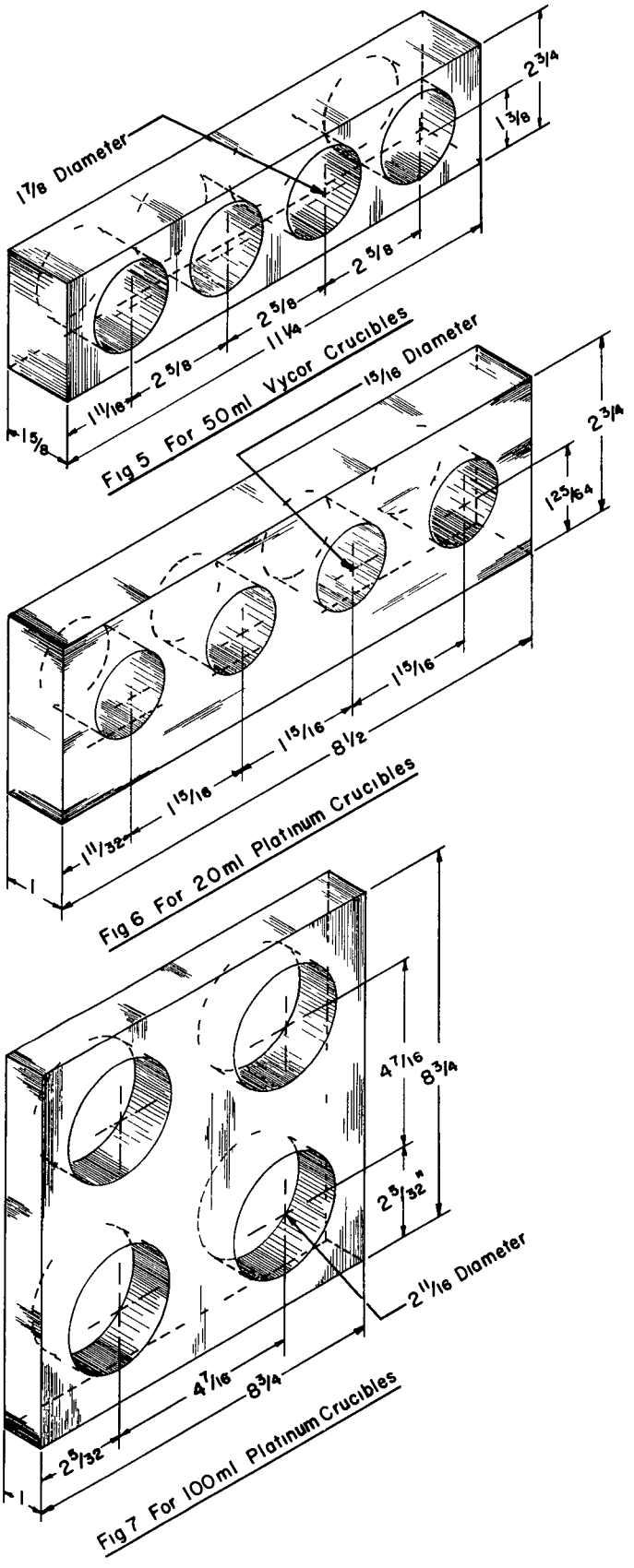
BLOCK EVAPORATORS