[redacted]

CENTRAL RESEARCH LIBRARY
DOCUMENT COLLECTION

MARTIN MARIETTA ENERGY SYSTEMS LIBRARIES
3 4456 0360732 7

ORNL-1800
Progress

AEC RESEARCH AND DEVELOPMENT REPORT

CHEMICAL TECHNOLOGY DIVISION

SEMIANNUAL PROGRESS REPORT

FOR PERIOD ENDING SEPTEMBER 30, 1954

Classification Cancelled
Or Changed To
By Authority Of AEC 7/13/71
By E. Gellhorn Date 11/10/71

CENTRAL RESEARCH LIBRARY
DOCUMENT COLLECTION
LIBRARY LOAN COPY
DO NOT TRANSFER TO ANOTHER PERSON
If you wish someone else to see this document, send in name with document and the library will arrange a loan.

OAK RIDGE NATIONAL LABORATORY
OPERATED BY
CARBIDE AND CARBON CHEMICALS COMPANY
A DIVISION OF UNION CARBIDE AND CARBON CORPORATION
UCC
POST OFFICE BOX P
OAK RIDGE, TENNESSEE

[redacted]

RESTRICTED DATA
This document contains Restricted Data as defined in the Atomic Energy Act of 1954. Its transmittal or the disclosure of its contents in any manner to an unauthorized person is prohibited.

[redacted]

[redacted]

ORNL-1800

This document consists of 38 pages.
Copy 4 of 138 copies. Series A.

Contract No. W-7405-eng-26

CHEMICAL TECHNOLOGY DIVISION

SEMIANNUAL PROGRESS REPORT

for Period Ending September 30, 1954

F. L. Culler – Division Director
F. R. Bruce – Associate Director and Chemical Development Chief
W. K. Eister – Unit Operations Chief
H. E. Goeller – Process Design Chief
H. K. Jackson – Pilot Plant Chief

DATE ISSUED

DEC 28 1954

OAK RIDGE NATIONAL LABORATORY
Operated by
CARBIDE AND CARBON CHEMICALS COMPANY
A Division of Union Carbide and Carbon Corporation
Post Office Box P
Oak Ridge, Tennessee

[redacted]

MARTIN MARIETTA ENERGY SYSTEMS LIBRARIES
3 4456 0360732 7

[redacted]

INTERNAL DISTRIBUTION

1. C. E. Center
2. Biology Library
3. Health Physics Library
4-6. Central Research Library
7. Reactor Experimental Engineering Library
8-11. Laboratory Records Department
12. Laboratory Records, ORNL R.C.
13. C. E. Larson
14. L. B. Emlet (K-25)
15. J. P. Murray (Y-12)
16. A. M. Weinberg
17. E. H. Taylor
18. E. J. Murphy
19. E. D. Shipley
20. F. C. VonderLage
21-22. F. L. Culler
23. W. H. Jordan
24. J. A. Swartout
25. S. C. Lind
26. A. H. Snell
27. A. Hollaender
28. M. T. Kelley
29. G. H. Clewett
30. K. Z. Morgan
31. T. A. Lincoln
32. A. S. Householder
33. C. S. Harrill
34. C. E. Winters
35. D. W. Cardwell
36. E. M. King
37. W. K. Foster
38. F. R. Bruce
39. H. K. Jackson
40. R. S. Livingston
41. C. F. Keim
42. C. E. Susano
43. H. W. Goeller
44. S. Lawroski (K-25)
45. R. E. Engberg
46. F. N. Lyon
47. J. B. Graham
48. J. B. Briggs
49. W. D. Cowen
50. J. P. M. Reyling
51. G. C. Williams
52. E. P. Wigner (consultant)
53. R. W. Johnson
54. J. A. Lane
55. R. E. Blanco
56. W. E. Unger
57. D. E. Ferguson
58. R. A. Charpie
59. G. E. Boyd
60. J. L. Gabbard
61. A. J. Skinner
62. ORNL Document Reference Library, Y-12 Branch

EXTERNAL DISTRIBUTION

63-69. Argonne National Laboratory
70. Armed Forces Special Weapons Project (Sandia)
71. Armed Forces Special Weapons Project (Washington)
72-78. Atomic Energy Commission, Washington
79-81. Brookhaven National Laboratory
82. Carbide and Carbon Chemicals Company (C-31 Plant)
83-84. Carbide and Carbon Chemicals Company (K-25 Plant)
85. Chicago Patent Group
86. duPont Company, Augusta
87. duPont Company, Wilmington
88-93. General Electric Company, Richland
(1 copy to G. F. Hill and 1 copy to F. W. Albaugh)
94. Hanford Operations Office
95-99. Phillips Petroleum Co.
100. Iowa State College

[redacted]

[redacted]

101-104. Knolls Atomic Power Laboratory
105-107. Los Alamos Scientific Laboratory
108-110. Mound Laboratory
111. Naval Research Laboratory
112-115. New York Operations Office
116. Patent Branch, Washington
117-120. University of California Radiation Laboratory, Berkeley
121-122. Vitro Laboratories
123-137. Technical Information Service, Oak Ridge
138. Division of Research and Medicine, AEC, ORO

[redacted]

[redacted]

Reports previously issued in this series are as follows:

ORNL-268	Period Ending May 31, 1949
ORNL-467	Period Ending August 31, 1949
ORNL-530	Period Ending November 30, 1949
ORNL-663	Period Ending February 28, 1950
ORNL-763	Period Ending May 31, 1950
ORNL-846	Period Ending August 31, 1950
ORNL-936	Period Ending November 20, 1950
ORNL-1000	Period Ending February 20, 1951
ORNL-1061	Period Ending May 20, 1951
ORNL-1141	Period Ending August 20, 1951
ORNL-1311	Period Ending February 10, 1952
ORNL-1328	Period Ending May 20, 1952
ORNL-1385	Period Ending August 20, 1952
ORNL-1448	Period Ending November 20, 1952
ORNL-1494	Period Ending February 20, 1953
ORNL-1561	Period Ending September 30, 1953
ORNL-1708	Period Ending March 31, 1954

[redacted]

CHEMICAL TECHNOLOGY DIVISION

F. L. CULLER, DIRECTOR
VIRGINIA WELLS, SECRETARY
F. R. BRUCE,* ASSOCIATE DIRECTOR
JULIA HOPPE, SECRETARY
MARTHA W. GERRARD, REPORTS EDITOR

LONG RANGE PLANNING GROUP

E. D. ARNOLD
D. E. FERGUSON*
A. T. GRESKY
R. J. KLOTZBACH

C. W. SCHERSTEN, ASSISTANT TO DIRECTOR
H. B. GRAHAM, BUDGET AND COST
BETTYE BURNS, TYPIST
J. W. CLARK, PROCUREMENT
AUGUSTA DOBBIN, JANITRESS
AOLA JOHNSON, JANITRESS

CHEMICAL DEVELOPMENT SECTION

F. R. BRUCE,* SECTION CHIEF
J. A. McLAREN, SPECIAL ASSIGNMENT
J. A. MARINSKY,[i] CONSULTANT
(a) R. E. BLANCO, ASSISTANT SECTION CHIEF
(b) D. E. FERGUSON,* ASSISTANT SECTION CHIEF
JOAN RUSSELL, SECRETARY
ESTELLE GREENE, SECRETARY
IMOGENE LODPE, TYPIST

TECHNICIANS
J. E. FARMER C. F. KECK

(a) FEED MATERIALS, EXCER PROGRAM

O. C. DEAN, PROBLEM LEADER
C. P. JOHNSTON
N. A. KROHN

TECHNICIANS
L. A. BYRD
T. J. HENSON
H. F. SOARD

(a) U^{235} PROCESSING, DISSOLUTION STUDIES, HOPE PROJECT

J. R. FLANARY, PROBLEM LEADER
L. D. FRASHER[r]
J. H. GOODE
A. H. KIBBEY
R. G. WYMER

TECHNICIANS
D. M. HELTON
E. R. JOHNS
J. F. LAND
R. C. SHIPWASH
C. T. THOMPSON

(a) ION EXCHANGE TECHNOLOGY

I. R. HIGGINS, PROBLEM LEADER

TECHNICIANS
W. E. KEITH[s] W. E. SHOCKLEY

(a) HETEROGENEOUS REACTOR FUEL REPROCESSING

J. E. SAVOLAINEN

TECHNICIAN
N. S. BAULD[s]

(a) RADIOACTIVE WASTE STUDIES

G. A. EATON

(b) HOMOGENEOUS REACTOR FUEL AND BLANKET STUDIES, EQUIPMENT DECONTAMINATION, WASTE METAL RECOVERY

R. E. LEUZE, PROBLEM LEADER
D. O. CAMPBELL
R. H. RAINEY
W. E. TOMLIN

TECHNICIANS
J. M. DELOZIER
C. W. GREENE
D. W. HENDRIX
O. K. TALLENT

(b) HOMOGENEOUS REACTOR FUEL REPROCESSING

R. A. McNEES, PROBLEM LEADER
S. PETERSON[g]

TECHNICIAN
W. B. HOWERTON

(b) HOMOGENEOUS REACTOR FUEL AND BLANKET STUDIES

J. P. McBRIDE, PROBLEM LEADER
L. E. MORSE

TECHNICIAN
W. L. PATTISON

(b) HOMOGENEOUS REACTOR FUEL AND BLANKET STUDIES (RADIATION EFFECTS)

J. T. ROBERTS, PROBLEM LEADER

TECHNICIAN
BARBARA HARRILL[s]

(b) THOREX PROCESS

R. P. WISCHOW, PROBLEM LEADER
R. G. MANSFIELD

TECHNICIANS
R. C. LOVELACE
C. J. SHIPMAN

(a) VOLATILITY STUDIES, ANP FUEL RECOVERY PROCESS

D. E. FERGUSON,* PROBLEM LEADER
M. R. BENNETT
G. I. CATHERS
C. E. SCHILLING

PROCESS DESIGN SECTION

H. E. GOELLER, SECTION CHIEF
W. E. UNGER, ASSISTANT SECTION CHIEF
NELLINE HULSEY, SECRETARY
LUCILLE KUYKENDALL, SECRETARY
MAY PEPPER, SECRETARY
K. F. STOOKSBURY, CLERK

HOMOGENEOUS REACTOR FUEL REPROCESSING (THEORETICAL)

W. L. CARTER, PROBLEM LEADER
H. O. WEEREN

DRAFTSMEN
R. V. FOLTZ**
J. H. MANNEY**
J. N. WHEELER**

HOMOGENEOUS REACTOR FUEL REPROCESSING (ENGINEERING)

A. M. ROM, PROBLEM LEADER
F. C. McCULLOUGH

U^{235} PROCESSING

E. L. NICHOLSON, PROBLEM LEADER
F. N. BROWDER
F. E. HARRINGTON*

THOREX PROCESS, HOPE PROJECT

B. F. BOTTENFIELD, PROBLEM LEADER
D. O. DARBY
A. R. IRVINE
G. W. T. KEARSLEY
FLORENCE ISENHOUR, SECRETARY

ECONOMIC STUDIES

W. G. STOCKDALE, PROBLEM LEADER
P. L. ROBERTSON
VIRGINIA BARNARD, TYPIST

ANP FUEL RECOVERY AND VOLATILITY

R. P. MILFORD, PROBLEM LEADER

SPECIAL ASSIGNMENT

J. O. BLOMEKE – ORACLE FISSION PRODUCT CALCULATIONS
E. J. FREDERICK[a] – ASSISTANCE TO ANALYTICAL CHEMISTRY DIVISION
F. E. HARRINGTON* - EXCER -MOVING BED PROJECT
R. C. KEEN[s]
J. B. RUCH – ASSISTANCE TO ANALYTICAL CHEMISTRY DIVISION
W. F. SCHAFFER – FEED MATERIALS PROCESSING
H. R. ZEITLIN – CRITICALITY STUDIES

UNIT OPERATIONS SECTION

W. K. EISTER, SECTION CHIEF
H. F. JOHNSON,[f] SPECIAL ASSIGNMENT
S. H. JURY,[f] SPECIAL ASSIGNMENT
A. C. JEALOUS, SPECIAL ASSIGNMENT
(a) T. A. AREHART, GROUP LEADER
(b) E. D. NURMI, GROUP LEADER
(c) C. D. WATSON,* GROUP LEADER
VIRGINIA MORRIS, SECRETARY
MARILYN JOHNSON, TYPIST

TECHNICIAN
T. D. NAPIER

(a) DISSOLUTION STUDIES

D. L. FOSTER, PROBLEM LEADER
B. H. HAMLING

TECHNICIANS
W. S. CHRISTENBERRY[s]
D. T. NORMAND[s]
P. E. NOVAK[c]
J. C. ROSE

(b) FEED MATERIALS PROCESSING

J. E. MOORE, PROBLEM LEADER
H. S. BRYANT[s]
M. A. TURNER

TECHNICIANS
G. L. BROYLES[s]
G. R. GUINN
B. J. YOUNG[s]

(b) HOMOGENEOUS REACTOR FUEL REPROCESSING

M. E. WHATLEY, PROBLEM LEADER
J. L. PATTON[s]

TECHNICIANS
G. B. DINSMORE
V. L. FOWLER
F. L. ROGERS

(b) HOMOGENEOUS REACTOR FUEL AND BLANKET STUDIES (LOOPS)

R. W. HORTON, PROBLEM LEADER
P. A. HAAS

TECHNICIANS
R. D. ARTHUR
G. JONES
O. H. NEWMAN

(b) HOMOGENEOUS REACTOR FUEL AND BLANKET STUDIES (SLURRIES)

G. WILLIAMS,[r] PROBLEM LEADER
W. M. WOODS

TECHNICIAN
R. O. PAYNE

(c) U^{235} PROCESSING

C. D. WATSON,* PROBLEM LEADER
R. J. McNAMEE
G. A. WEST

TECHNICIAN
S. J. WATSON[c]

(c) VOLATILITY STUDIES

J. T. LONG, PROBLEM LEADER
S. H. STAINKER

TECHNICIAN
D. W. LEIGH

(a) FEED MATERIALS PROCESSING BY ION EXCHANGE

C. W. HANCHER
J. C. SUDDATH

TECHNICIAN
J. S. TAYLOR

PILOT PLANT SECTION[y]

H. K. JACKSON, SECTION CHIEF
G. S. SADOWSKI, SPECIAL ASSIGNMENT
(a) W. H. LEWIS, GROUP LEADER
(b) R. B. LINDAUER, GROUP LEADER
(c) E. M. SHANK, GROUP LEADER
AGNES HAIR, SECRETARY
R. B. WATERS, DRAFTSMAN
E. WRIGHT, CLERK
MARY LYNN CAMERON, TYPIST
PRISCILLA SAVAGE,[z] TYPIST

(a) WASTE METAL RECOVERY

J. L. MATHERNE, PROBLEM LEADER
W. R. WHITSON
C. D. HYLTON
R. E. BROOKSBANK
G. D. DAVIS
J. F. LOCKMILLER
D. E. SPANGLER
D. H. SUMMERS

OPERATORS
C. W. BOATMAN
E. C. BRANTLEY
H. S. CALDWELL
J. M. GLASGOW
M. C. HILL
C. H. JONES
J. W. MEADE
S. A. McCOSH
R. J. SHANNON
S. E. SPENCER
W. M. SPROULE
G. R. THOMPSON
H. C. THOMPSON

(a) HOPE PROJECT

J. M. CHANDLER, PROBLEM LEADER

(a) HOMOGENEOUS REACTOR FUEL AND BLANKET STUDIES

K. H. McCORKLE, PROBLEM LEADER

(c) THOREX PROCESS

J. W. LANDRY
E. LIEBERMAN
R. H. WINGET
W. R. WINSBRO
W. T. McDUFFEE
W. H. CARR
C. V. ELLISON
J. L. GORY
W. J. GRETER[w]
L. J. KING
H. H. MESSENHEIMER
J. R. PARROTT
A. J. PECQUET

OPERATORS
W. T. BOSTIC
E. W. BROWN
J. R. COLLINS
J. E. HIGGINS
W. A. LINSEY
R. E. PURKEY
W. A. SHANNON
H. R. THOMAS
C. E. WADDELL
J. H. WALKER

DRAFTSMAN
J. P. JARVIS**

(b) HOMOGENEOUS REACTOR FUEL REPROCESSING

W. D. BURCH
R. B. KEELY
B. H. MORRISON

OPERATORS
J. H. BROCK
W. J. BRYAN
R. M. DUFF
J. H. GROOVER
R. L. HICKEY
F. H. WATSON

TECHNICIAN
J. F. TALLEY

*DUAL CAPACITY
**ON LOAN FROM ENGINEERING DEPARTMENT
[a]ON LOAN FROM ANALYTICAL CHEMISTRY DIVISION
[c]CO-OP STUDENT
[g]ON LOAN FROM EDUCATIONAL RELATIONS AND TRAINING DIVISION
[i]IONICS PERSONNEL
[r]RESEARCH PARTICIPANT
[s]SUMMER EMPLOYEE
[f]CONSULTANT, UNIVERSITY OF TENNESSEE
[w]ON LOAN FROM INSTRUMENTATION AND CONTROLS DIVISION
[y]R. H. VAUGHAN ON LOAN TO ENGINEERING AND MECHANICAL DIVISION; J. W. ULLMAN ON EDUCATIONAL LEAVE
[z]ON LOAN FROM PERSONNEL DIVISION

TOTAL PERSONNEL

SCIENTIFIC	97
TECHNICAL	67
ADMINISTRATIVE, CLERICAL, AND SERVICE	22
SUMMER EMPLOYEES	12
	198

[redacted]

LECTURES

F. R. Bruce, "Chemical Processing," Third Army Atomic Energy Conference on Nuclear Reactors, Oak Ridge, Tenn., May 16, 1954 (Unclassified).

F. L. Culler, "Characterization of Fission Product Waste," Woods Hole Oceanographic Institution, Woods Hole, Mass., Aug. 5, 1954 (Unclassified).

F. L. Culler, "Design of Radiochemical Processing Plants," Alton–Wood River Section, American Institute of Chemical Engineers, East Alton, Ill., Sept. 9, 1954 (Unclassified).

H. K. Jackson, "Analytical Requirements of the ORNL Pilot Plant," East Tennessee Section of American Chemical Society, Oak Ridge, Tenn., May 4, 1954 (Unclassified).

W. G. Stockdale, "Disposal of Radioactive Waste," Graduate Seminar, Oklahoma A & M College, Stillwater, Okla., May 13, 1954 (Unclassified).

C. D. Watson, "The Benefits of Atomic Energy During Peacetime," American Society of Mechanical Engineers, Regional Meeting, Birmingham, Ala., April 14, 1954 (Unclassified).

C. D. Watson, "Protective Coatings – Psychology and Corrosion," Charter Meeting of East Tennessee Section of National Association of Corrosion Engineers, Knoxville, Tenn., June 17, 1954 (Unclassified).

PUBLICATIONS

Reports issued during the past six months are as follows:

A. T. Gresky, M. R. Bennett, S. S. Brandt, W. T. McDuffee, B. G. Ryle, J. E. Savolainen, and R. P. Wischow, *Laboratory Development of the Thorex Process: Progress Report, February 1, 1953 to July 31, 1953*, ORNL-1610 (April 9, 1954) (Secret).

F. N. Browder, *Idaho Chemical Processing Plant Liquid Waste Facilities: Design Report*, ORNL-1687 (Aug. 6, 1954) (Secret).

R. H. Rainey, *Development of the Amex Process for Americium Recovery*, ORNL-1697 (May 7, 1954) (Secret).

Chemical Technology Division Semiannual Progress Report for Period Ending March 31, 1954, ORNL-1708 (June 11, 1954) (Secret).

G. I. Cathers, *Recovery and Decontamination of Uranium from Fused Fluoride Fuels by Fluorination*, ORNL-1709 (May 26, 1954) (Secret).

J. T. Long, *Uranium Hexafluoride Distillation: Correlations for Engineering Design*, ORNL-1738 (Aug. 10, 1954) (Secret).

D. E. Ferguson, "The Economics of Power Reactor Processing," *Sci. Monthly* **79**, 125 (1954).

[redacted]

[redacted]

CONTENTS

Abstract 1

Summary 1

1. Recovery of U^{235} 2
   - Criticality Criteria 2
   - Solvent-Extraction Process 3
   - Intercycle Stripping and Evaporation 3
   - Waste System 5

2. Waste Metal Recovery 5
   - Plutonium Recovery 5
   - Americium Recovery 5
   - Clementine Reactor Fuel Processing 5

3. Thorex Process 6

4. Excer Program 7
   - Moving-Bed Process 7

5. Hope Project 9
   - Criticality 9
   - Underwater Maintenance 9
   - Radioactive Waste Disposal 9
   - SF Accountability 9
   - Inventory 9
   - Continuous Slug Charger 9

6. Economic Studies 10
   - Idaho Chemical Processing Plant Costs 10

7. ARE Fuel Recovery and Reprocessing 12
   - Solvent-Extraction Process 12
   - Fluoride-Volatility Process 12

8. Homogeneous Reactor Fuel and Blanket Processing 13
   - Fuel Reprocessing 13
   - Plutonium-Producer Blanket Processing 14
   - Decontamination of the HRE 14

9. Homogeneous Reactor Slurry Studies 15

10. Feed Materials Processing 16
    - Metallex Process 16
    - Electrochemical Reduction of Thorium Tetrachloride 19

11. Volatility Studies 20
    - Molten-Salt-Dissolution Fluoride-Volatility Process 20
    - Costs of Recovering Uranium and Plutonium from Irradiated Uranium Metal by the Chlorine Trifluoride Volatility Process 20

12. Radioactive Waste Studies 21
    - Evaluation of Lined Earth Basins for Storing Radioactive Waste Solutions 21
    - Molten Aluminum Nitrate Storage 21

13. Ion-Exchange Technology 22

[redacted]

[redacted]

14. Dissolution Studies 23
Acid Dissolution 23
Caustic Dissolution 24
15. Heterogeneous Reactor Fuel Reprocessing 26
16. Criticality Studies 27
17. Chemical Engineering Research 27
Hydraulic-Ram-Controlled Ion-Exchange Column 27
Venturi Contactors 27

[redacted]

[redacted]

CHEMICAL TECHNOLOGY DIVISION SEMIANNUAL PROGRESS REPORT

ABSTRACT

Progress during the period April 1 to September 30, 1954, is reported on the following projects: U^{235} processing, plutonium and americium recovery from waste metal, the Thorex process, the Excer–Moving-Bed process, the Hope project, the Idaho Chemical Processing Plant cost analysis, ARE fuel processing, homogeneous reactor fuel and blanket processing and slurry studies, the Metallex process, volatility studies, radioactive waste studies, ion-exchange technology, dissolution studies, heterogeneous reactor fuel processing, criticality studies, the hydraulic-ram ion-exchange column, and venturi liquid-liquid contactors.

SUMMARY

Plans for an ORNL U^{235} processing plant have been canceled, but process flowsheet and preliminary design studies are continuing in order to provide assistance in the design of a similar plant at Savannah River. Preliminary solvent-extraction flowsheets are being tested.

Approximately 67 kg of plutonium and 10 g of americium were recovered from Hanford slag and crucible waste. The americium was contaminated with 3000 g of lanthanum, but an ion-exchange–citrate elution process was developed which yielded an americium product with a lanthanum-to-americium ratio of 1:100.

The Thorex process pilot plant has been installed, and preoperational testing is in progress.

The Excer–Moving-Bed process for converting uranyl nitrate to uranium tetrafluoride was successfully demonstrated in small-scale preliminary experiments. The process included denitration of the uranyl nitrate to UO_3, reduction to UO_2, and hydrofluorination to UF_4.

The total capital cost of the Idaho Chemical Processing Plant was $31,106,000. Complete cost breakdowns have been prepared.

The molten salt dissolution fluoride-volatility process for preparing fresh ARE fuel from the used material was demonstrated in preliminary tests. The molten $NaF\text{-}ZrF_4\text{-}UF_4$ salt was fluorinated, and the UF_6 which formed and volatilized was resublimed and dissolved in fresh molten $NaF\text{-}ZrF_4$. The uranium recovery was greater than 99.95%, and decontamination factors of 4000 to 5000, sufficiently high for refabricating ARE fuel, were achieved. The process can be adapted to obtain a decontamination factor for the uranium product of 20,000.

An estimate of the cost of chemical processing for the aqueous homogeneous thermal breeder reactor indicated that for a three-reactor station, each reactor at 450 Mw, the cost of chemical processing would be about 1.0 mill per kilowatt-hour of electricity produced. The D_2O and U^{233} inventory charges for both the reactor and the chemical plant will raise the total fuel cost to about 2 mills/kwhr. The scheme of processing found to be the most economical consisted in removing insoluble fission and corrosion products from the uranyl sulfate core by a liquid-solid centrifugal separator and removing soluble fission and corrosion products from the combined core solution and thorium oxide slurry blanket by the Thorex solvent-extraction process. Results of a study of the radiation hazards of a reactor fuel leak emphasize the need for processing to control the concentration in the fuel of the I^{131} as well as of the rare earths, barium, and strontium.

Thorium oxide for use in the homogeneous reactor is being prepared in 5-kg lots. Thorium oxalate is precipitated from thorium nitrate solution by means of oxalic acid, dried, and calcined to the oxide by heating at 370°C for 4 hr and at 650°C for 4 hr.

Conversion of thorium tetrachloride to vacuum-melted thorium metal ingots by the Metallex process has been estimated to cost $1.28 per pound of

[redacted]

thorium, exclusive of the cost of the thorium tetrachloride and including six-year amortization of the plant. On a laboratory scale, thorium tetrachloride dissolved in anhydrous PDA was reduced by contact with sodium or lithium amalgam at temperatures below 100°C to form a thorium quasi amalgam, from which a 9-g button of thorium metal was formed by filtering, cold-pressing, and melting.

Reactor fuel elements, such as those made of zirconium-uranium or stainless steel–uranium mixtures, were dissolved in a molten fluoride salt bath to form a UF_4 solution, which could be processed by the fluoride-volatility process developed for ARE fuel. A cost analysis of the chlorine trifluoride method for processing irradiated uranium slugs indicated that, exclusive of inventory charges, plutonium might be produced for a processing cost of $15.4 per gram. The corresponding cost for the Purex process is $19.1 per gram of plutonium.

Recovery of uranium from the unfiltered sulfuric acid leach pulp slurries of low-grade ores appears to be physically feasible in the Higgins ion-exchange column.

Uranium-aluminum alloy slugs were continuously dissolved in acid to form feed suitable for either the Idaho or the ORNL 25 process solvent-extraction step. The 5.5-in.-dia, 10-ft-high, continuous-trickle dissolver operated satisfactorily. From Hanford type (7.5% uranium) cast uranium-aluminum alloy slugs, product conforming to ORNL U^{235} solvent-extraction-process flowsheet specifications was produced at a rate of 4 to 5 kg of uranium per day or to Idaho Chemical Processing Plant specifications at a rate of 13 kg per day. In preliminary studies, caustic dissolution of uranium-aluminum alloy was shown to proceed at a rate approximately 1.5 times that for acid and to produce waste volumes one-fourth as large as those obtained with acid dissolution. Centrifugation at 2200 *g* in a 12-in.-dia bowl centrifuge removed the solid uranium oxide product from the caustic aluminum solution.

The jackets of the stainless-steel-clad, stainless steel–uranium dioxide fuel plates for the proposed 10-Mw package reactor were carburized with methane at 1000°C and then dissolved in copper sulfate solution. This process is less corrosive to equipment than is concentrated sulfuric acid dissolution, and the waste volumes are one-sixth as large.

A continuous ion-exchange column in which there are no intermittent, instantaneous pauses in the movement was designed. The liquid flows upward and the resin downward; fluidization of the resin bed is prevented by a hydraulic ram on the top of the column.

1. RECOVERY OF U^{235}

The AEC has reduced considerably the immediate scope of the irradiated-U^{235} processing program. Since the expanded Idaho Chemical Processing Plant can process both Hanford and Savannah River U^{235} fuel until a new U^{235} recovery plant can be placed in operation at Savannah River, the plans for construction of a U^{235} processing plant at ORNL were canceled, and all new design work was halted. The terminal design report,[1] which was prepared jointly by ORNL and the Catalytic Construction Company, summarizes the design status as of the cancellation date, July 1, 1954. The Catalytic Construction Company contract for design of the Oak Ridge Chemical Processing Plant was terminated August 15, 1954.

The interest at ORNL in U^{235} processing has been transferred to assisting Du Pont in planning for a U^{235} processing plant at Savannah River. Personnel at ORNL will develop and demonstrate adequate chemical flowsheets for a U^{235} separation process based on either acid or caustic continuous dissolution (see Sec. 14). Flowsheets will be demonstrated and components will be tested on a laboratory or unit-operation scale. ORNL will make preliminary design studies for a Savannah River process aimed at producing a minimum-cost plant. At the time of cancellation, design criteria had been frozen and material and heat balances had been completed; process descriptions had been written and issued and calculations had been made for the entire facility.

Criticality Criteria. Criticality criteria reported earlier[2] have been extended with two additional

[1] J. L. Dodson, *Engineering Design, Title I and Title II, for the Oak Ridge Chemical Processing Plant*, ORNL CF-54-7-157 (July 27, 1954).

[2] "Criticality Criteria," *Chem. Tech. Semiann. Prog. Rep. March 31, 1954*, ORNL-1708, p 2.

pieces of information. It now appears safe to load three 200-slug baskets in a single intersite carrier, thereby increasing the carrier capacity from 8.8 to 13.4 kg of U^{235}. Criticality experiments on the diameter of the continuous dissolver indicated the maximum safe outside diameter to be 12 in. (see Sec. 14).

Solvent-Extraction Process. The U^{235} recovery process previously reported[3] consists in continuous nitric acid dissolution of irradiated alloy, two TBP solvent-extraction cycles for uranium decontamination from fission products, product concentration by evaporation, and final product purification by adsorption of residual fission products (zirconium and niobium) on silica gel.

A tentative first-cycle flowsheet (see Fig. 1.1) has been developed in which 6% TBP in sulfonated Amsco 125-90 is used as the solvent; the feed contains 0.1 *M* nitric acid, 1.8 *M* aluminum nitrate, and 1.92 g of uranium per liter, and the scrub is 0.75 *M* aluminum nitrate. The uranium is stripped with 0.01 *M* nitric acid, evaporated, and converted to second-cycle feed by the addition of nitric acid. In three preliminary runs, the highest gross beta decontamination factor obtained for the uranium product across the first solvent-extraction cycle in ¾-in.-i.d. glass pulsed columns was 2.7×10^4. The major contaminant in the first-cycle product was ruthenium. The feed used was prepared from Hanford-irradiated slugs (7.5% uranium–92.5% aluminum), and operation was at approximately 1% of the process activity level expected from Savannah River slugs.

[3] "Recovery Process," *Chem. Tech. Semiann. Prog. Rep. March 31, 1954*, ORNL-1708, p 2.

In the second-cycle flowsheet, 15% TBP is used; the feed contains 3 *M* nitric acid and 140 g of uranium per liter, and the scrub is 3 *M* nitric acid. Uranium is stripped with 0.01 *M* nitric acid. The second-cycle flowsheet was tested with the combined product from two first-cycle pulsed-column extractions, which had had an average decontamination factor of 6.3×10^3 in the first cycle. In a countercurrent batch system simulating second-cycle conditions, the decontamination factor was 1.3×10^3. This value, combined with the average first-cycle factor, gave an over-all decontamination factor of 1.1×10^7 across two solvent cycles, exclusive of final product purification on silica gel. The principal contaminant of the second-cycle product was zirconium, which should be easily removed by adsorption on silica gel. It is estimated that an over-all gross beta decontamination factor of 4×10^7 is needed in order to meet the product activity specifications when 300-day-irradiated Savannah River slugs are processed after 30% burnup and 150 days of cooling.

Pulsed-column tests intended to define the extraction- and strip-section column dimensions required for recovering U^{235} at a rate of 15 kg/day have been completed for both solvent-extraction cycles of the process (see Table 1.1).

Intercycle Stripping and Evaporation. The TBP remaining in the aqueous product from the first extraction cycle must be removed before the product is evaporated to form the second-cycle feed. Traces of TBP will hydrolyze during the evaporation, and the hydrolysis products will complex the uranium and will cause an explosion hazard. The TBP was

TABLE 1.1. FIRST- AND SECOND-EXTRACTION-CYCLE CONDITIONS REQUIRED FOR SATISFACTORY U^{235} RECOVERY

Uranium loss: less than 0.01% per tower.
Operating conditions: extraction-scrub columns, 80% of flooding; strip columns, 50% of flooding.

Column	Pulse Frequency (cycles/min)	Flooding Rate (gal/ft²/hr)	Column		
			HETS (ft)	Diameter (in.)	Height (ft)
IA extraction	80	785	6.1	6	16
IB strip	70	550	3.4	4.7	17
IIA extraction	70	950	3.1	1.6	12
IIB strip	60	550	5.3	2.2	21

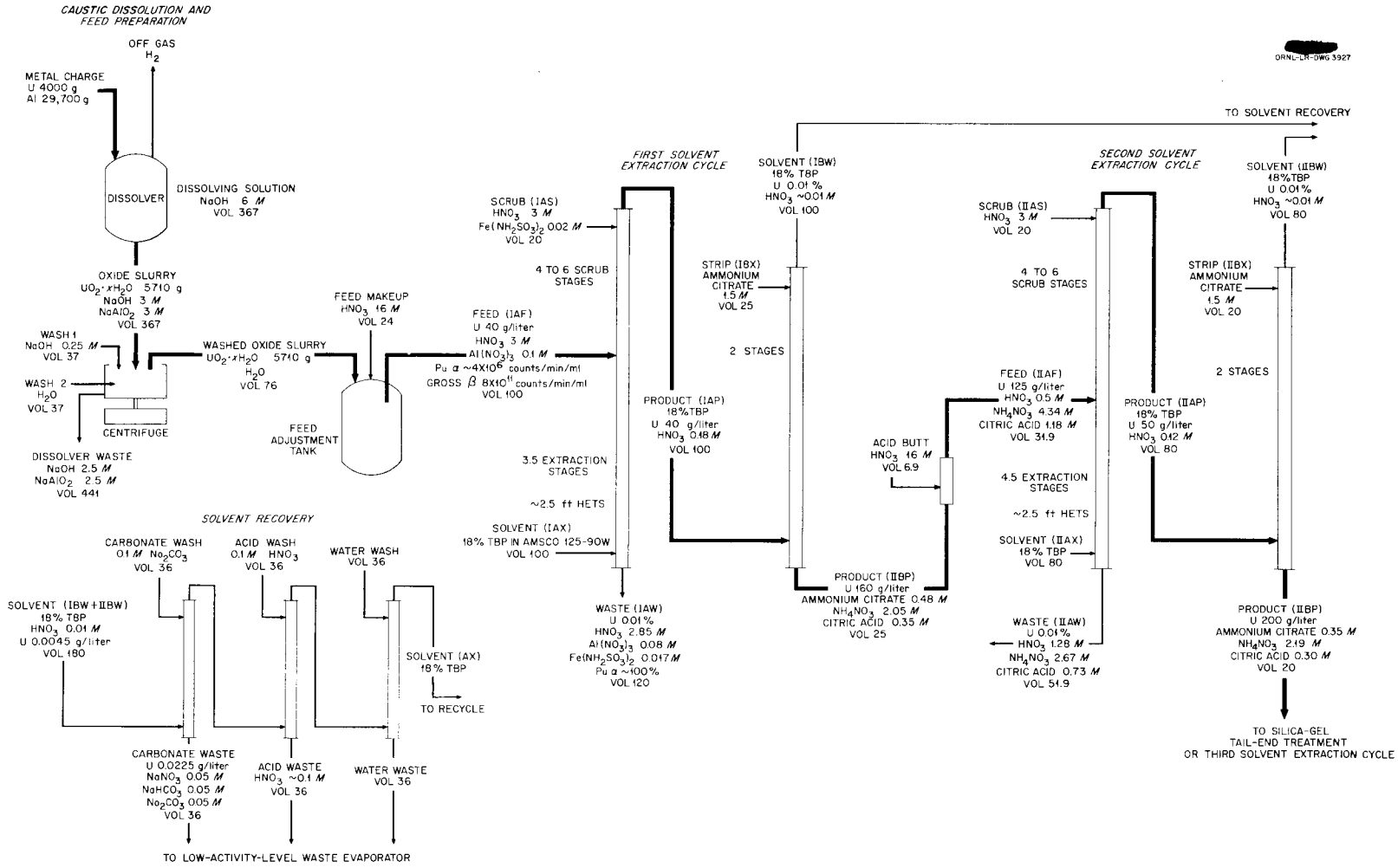

Fig. 1.1. 25 Process Chemical Flowsheet No. 1 (Preliminary). Caustic-dissolution–acidic solvent-extraction concept; basis: feed (IAF) volume = 100.

successfully removed from a simulated first-cycle aqueous uranium product in an 8-in.-dia bubble-cap column. The column had 15 plates, 12 for stripping and 3 for de-entraining; uranium losses by entrainment were less than 0.0001% when the column was operated at a boilup rate up to 90% of flooding. Flooding occurred at a boilup rate of 400 lb/ft^2/hr. The required sevenfold volume reduction of the stripped solution was obtained in a jacketed kettle reboiler.

Waste System. It was decided that the first-cycle, aqueous raffinate waste from the ORNL U^{235} processing plant could be stored most economically in a 1,000,000-gal self-supporting stainless steel tank equipped with sufficient cooling-coil capacity to maintain the temperature of the tank contents at or below 150°F in order to minimize tank corrosion. It was decided to run only one 2-in. unencased stainless steel line 6000 ft from Building 3019 to the waste-tank area.

2. WASTE METAL RECOVERY

Operation of the Metal Recovery Plant[1] for recovery of plutonium and americium from Hanford plutonium-reduction slag and crucible waste began on March 10 and was completed on September 11, 1954. A total of 17 tons of slag and crucible waste was processed.

Plutonium Recovery. A total of 66,689 g of plutonium was recovered; this is an over-all recovery of 99.7%, based on losses. Dissolver-solution analyses indicated that the original waste contained 88.4% as much plutonium as had been calculated from Hanford SF data, or 67,106 g as compared with a calculated 75,889 g. Plant operation was satisfactory; the only significant difficulty was the occasional plugging of the resin columns with sand from the plutonium-solution filter. The plutonium nitrate solution product was processed to the metal without difficulty.

Americium Recovery. Approximately 10 g of americium was recovered from the Hanford metallurgical waste by means of the Amex process. The Amex process was not originally designed to separate americium from lanthanum, because the metallurgical waste was originally reported to contain only insignificant amounts of lanthanum. Both elements were sorbed on the Dowex 50 resin column used for americium recovery, and periodic breakthrough of the americium occurred. Frequent elution of the resin column was necessary, and the product solution, 250 liters in volume, contained 3 kg of lanthanum and 9.8 g of americium.

A process developed for the separation of americium from lanthanum consists in eluting, with concentrated hydrochloric acid, a cation-exchange resin column partially loaded with americium and lanthanum. The americium is eluted more readily than the lanthanum, and, with a 30% column loading, the ratio of lanthanum to americium is decreased by a factor of about 150 in the first 50% of the americium to come off the column and by a factor of 10 or more with a 90% yield. By this method, a product containing 1 g of americium and less than 2 g of lanthanum was obtained; it was shipped to the University of California Radiation Laboratory at Livermore to meet an October 1 commitment.

Another eluant, 0.15 *M* citric acid–0.10 *M* diammonium citrate, has been found and will be used for separating the remainder of the americium. This gave a product with a lanthanum-to-americium ratio of less than 1:100 from a starting material with a lanthanum-to-americium ratio of approximately 1600:1, with greater than 99% americium recovery. A partial separation of americium from the remaining plutonium was also obtained.

Clementine Reactor Fuel Processing. Processing of 33 fuel elements from the Los Alamos Clementine reactor for recovery of 15 kg of plutonium and 3 g of americium was begun on September 12. The fuel elements are being dissolved in 12.5 *M* nitric acid containing 0.05 *M* hydrofluoric acid; extraction conditions are essentially the same as those previously described for plutonium[2] and americium[3] recovery, except that the plutonium feed compo-

[1] *Chem. Tech. Semiann. Prog. Rep. March 31, 1954*, ORNL-1708, p 4.

[2] Development work on the plutonium-recovery process has been described: R. L. Folger, E. B. Sheldon, and S. V. Castner, *Recovery of Plutonium from Metallurgical Wastes*, ORNL-1442 (May 6, 1953).

[3] R. H. Rainey, *Development of the Amex Process for Americium Recovery*, ORNL-1697 (May 21, 1954).

sition, and hence the Amex process feed composition, is somewhat different. The size of the dissolver in the Metal Recovery Building makes it necessary to dissolve a 455-g fuel element in a minimum of 50 gal of dissolvent. In order to prepare the plutonium-cycle feed, the dissolver solution is mixed with 2.0 *M* aluminum nitrate to obtain a solution 1.3 *M* in aluminum nitrate and 4.4 *M* in nitric acid. Aqueous waste from the plutonium cycle is neutralized with gaseous ammonia in order to prepare it for the americium cycle. These conditions are not necessarily optimum, but the time schedule did not allow further development. The americium cycle is satisfactory for recovering americium; however, a rare-earth decontamination factor of less than 2 is obtained, which means that further purification will be needed.

Laboratory tests showed that plutonium metal dissolves with a penetration rate of about 0.1 cm/hr in boiling 12.5 *M* nitric acid containing 0.05 *M* hydrofluoric acid. To date, five dissolvings (2.3 kg of plutonium) have been made, and initial column processing has been satisfactory.

3. THOREX PROCESS

The design and construction of the Thorex pilot plant for recovery of U^{233} and thorium from irradiated thorium metal were completed, and the equipment was installed. Mantle-grade thorium nitrate tetrahydrate for use in initial nonradioactive column runs is being prepared, and preoperational cleaning, testing, and vessel calibration are under way. Operation with nonradioactive feed is planned to start by October 15.

In further studies on improving the process, product-iodine decontamination factors in the extraction column were increased from 10 to 200 by pretreating the Amsco 125-82 solvent diluent with oleum, which removes unstable and unsaturated compounds so that the iodine in the product stream is limited to that dissolved by the TBP.

Chemical studies indicated that thorium slugs bonded with aluminum-silicon are more difficult to process than are nonbonded slugs. Intermetallic compounds of thorium silicide formed on the thorium–aluminum-silicon interface, resulting in a brittle, highly corrosion-resistant layer about 7 mils thick. The bonded elements were extremely resistant to dissolution by conventional acidic or caustic methods.

When the evaporation-digestion step reported previously[1] is included in the feed-preparation cycle, Feed Materials Production Center (Fernald, Ohio) zirconia-cast thorium metal can be processed as well as the beryllia-cast thorium formerly used. Although more zirconium and silica are present in the zirconia-cast thorium metal than in the beryllia-cast, these substances are converted to nondeleterious products in the evaporation-digestion step.

With present Thorex flowsheet conditions[2] of an acid-deficient feed and scrub, less mercury and fluoride are extracted from the slug solution than with the previous conditions[3] of an acid feed and acid-deficient scrub. Mercury concentrations of less than 25 ppm and fluoride concentrations of approximately 700 ppm, based on thorium, can be expected in the thorium product from one cycle of thorium extraction.

A ruthenium decontamination factor of 100 to 130 was obtained in the precipitation of thorium as the fluoride from the Thorex-process thorium-product concentrate. The conditions were similar to those employed at Feed Materials Production Center, that is, 48% HF, 2 to 5% stoichiometric excess, added to a 2 *M* thorium–1.5 *M* nitric acid product at 95°C. A crystalline, readily dried product was obtained.

Until a need for protactinium recovery arises, the protactinium solution will be stored for decay and eventual recovery as U^{233}.

[1] *Chem. Tech. Quar. Prog. Rep. Sept. 30, 1953*, ORNL-1561, p 13.

[2] A. T. Gresky, R. P. Wischow, M. R. Bennett, and J. E. Savolainen, *Laboratory Development of the Thorex Process: Progress Report, Aug. 1, 1953 to June 30, 1954*, ORNL-1757 (to be published), Fig. 2.1.

[3] A. T. Gresky *et al.*, *Laboratory Development of the Thorex Process: Progress Report, February 1, 1953 to July 31, 1953*, ORNL-1610 (April 22, 1954), Fig. 3.1.

4. EXCER PROGRAM

Moving-Bed Process. Engineering evaluations have indicated that the use of moving-bed reactors for converting uranyl nitrate to uranium tetrafluoride would reduce the costs inherent in the existing processes.[1] The development program involves the study of four steps: (1) UO_3-$UO_2(NO_3)_2 \cdot 6H_2O$ pelleting, (2) dehydration and denitration of the pellets to UO_3, (3) reduction of the UO_3 to UO_2, and (4) hydrofluorination of the UO_2 to UF_4 (see Fig. 4.1).

Pelleting of UO_3-$UO_2(NO_3)_2 \cdot 6H_2O$. In order to obtain uranyl nitrate pellets firm enough for use in a moving-bed reactor, it was necessary to mix the $UO_2(NO_3)_2 \cdot 6H_2O$ with UO_3. In small-scale studies, pulverized UO_3 and molten uranyl nitrate hexahydrate were pelleted by rapidly mixing the two materials and forcing the resultant paste through a screen or perforated plate at temperatures ranging from 80 to 240°C. The mixture hardened rapidly, but the setting time was increased by adding up to 4% water. Ten-pound batches of pellets containing 40 parts of $UO_2(NO_3)_2 \cdot 6H_2O$ were prepared in laboratory-scale equipment.

Denitration. In batch tests on the denitration of UO_3-$UO_2(NO_3)_2$ pellets in a reactor that was 1 in. in diameter and 6 in. high, with hot air as the source of heat, mixtures of up to 40 parts of $UO_2(NO_3)_2$ with 60 parts of UO_3 were denitrated without difficulty; a 50-50 mixture of the two components caked in the reactor. The pellets lost some resistance to crushing when they were denitrated, and they were further weakened during reduction to UO_2 with hydrogen in a batch reactor. Nevertheless, the UO_2 pellets appeared to have more than sufficient strength for use in moving-bed operations. When partially hydrated UO_3 (2.7% water) was used in the preparation of these pellets, a soft pellet always resulted. Pellets that were reduced in a bed with hydrogen passing through the bed were much harder than those that were reduced in a boat with the hydrogen passing over the pellets.

Exploratory tests with a 1-in.-dia glass moving-bed reactor indicated that it is feasible to denitrate uranyl nitrate in a moving bed. The −6, +10 mesh pelleted feed used was a 40-60 mixture of $UO_2(NO_3)_2 \cdot 6H_2O$ and UO_3, with up to 4% H_2O added. Denitration was accomplished with 400°C air passing through the bed in the insulated, unheated reactor. There was no difficulty in maintaining solids flow, and the pellets did not cake or break up. Standard reactivity tests,[2] in which pulverized UO_3 is reduced to UO_2 and then hydrofluorinated to UF_4 in a tube furnace, indicated that the UO_3 produced in the moving-bed reactor was much more reactive in the conversion to UF_4 than Mallinckrodt pot-denitrated oxide (92% conversion to UF_4 in 30 min at 410°C, compared to 79% for the Mallinckrodt standard oxide) but slightly less dense than the pot-denitrated oxide (2.8 vs 3.2 g/cc). A high density is desirable for UF_4 that is to be converted to uranium metal.

Pelleting of UO_3-H_2O. Large-scale pelleting of UO_3-H_2O mixtures was carried out in order to study equipment for use in the similar, but apparently more difficult, task of pelleting UO_3-$UO_2(NO_3)_2 \cdot 6H_2O$ mixtures and to prepare pellets for moving-bed reduction-hydrofluorination tests. Uranium trioxide hydrate pellets were produced continuously at rates as high as 1000 lb/hr for up to 30-min periods. The pulverized UO_3 and about 12 wt % H_2O were fed continuously to a

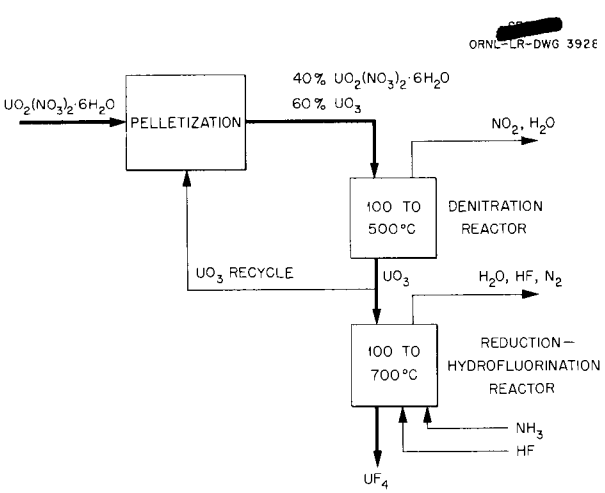

Fig. 4.1. Preparation of Uranium Tetrafluoride from Uranyl Nitrate by the Moving-Bed Process.

[1] *Chem. Tech. Semiann. Prog. Rep. March 31, 1954*, ORNL-1708, p 6.

[2] J. S. Fox, *A Laboratory Test for Evaluation of Uranium Trioxides as Feed Material*, K-1009 (May 7, 1953).

hammer mill, which mixed and extruded the material through a perforated bottom plate. The extruded material hardened while on a belt conveyer; then it was broken up by being pushed through the 4 mesh screen of an oscillating granulator. The −8 mesh fines (approximately 25% of the total) were removed by a vibrating screen. After 24 hr of storage in drums, the pellets had the approximate formula $UO_3 \cdot 1.5H_2O$.

Reduction-Hydrofluorination. The success of the moving-bed program depends upon a demonstration that the highly exothermic reduction and hydrofluorination reactions can be carried out in large beds. A study of the available data and preliminary calculations indicated that the simultaneous reduction of UO_3 by NH_3 and the hydrofluorination by HF to form UF_4 may be feasible. The items of equipment needed for a simultaneous process would be fewer and simpler in construction than for a process in which the steps were separate. In addition, the utilization of HF might be more efficient. In the simultaneous system, overall temperature control would be maintained by the dissociative cooling capacity of NH_3 and HF and the simultaneous dehydration of $UO_3 \cdot xH_2O$ being balanced with the heating effect of reduction and hydrofluorination. At the low bed temperatures thus obtained in the vicinity of the gas outlet, approximately 100°C, HF reacts more rapidly with UO_3, to give UO_2F_2, than it does with UO_2. If practicable, such a step could possibly be included in a future process for making UF_6 by the oxidation of UF_4 with oxygen; the intermediate UO_2F_2 would be recycled to the reduction-hydrofluorination reactor. Earlier batch tests at other sites have shown that UO_3 hydrate[3] and the UO_2F_2 and U_3O_8 intermediates[4,5] can be converted readily to UF_4 by means of mixtures of NH_3 and HF.

In scouting tests in a 4-in.-dia moving-bed reactor on the simultaneous reduction-hydrofluorination of UO_3 hydrate pellets to UF_4 with NH_3 and HF, the solids flow was uniform, without bridging of the bed or attrition of the pellets, and the gas-pressure drop through the bed and condenser was less than 1 psi with pellets of both −3, +4 and −4, +8 mesh size. Excessive temperatures were not encountered. Approximately 95% reduction of the U(VI) to U(IV) was obtained for up to 5-hr periods, with an average solids-retention time of 8 hr and a 114% excess of NH_3. During this run, in which a 67% excess of HF was fed, the conversion to UF_4 gradually fluctuated from 37 to 91%, with the conversion efficiency depending primarily upon the depth of bed traversed by the HF. As the points of HF introduction were lowered, the UF_4 content of the product increased.

The experimental reactor used is a vertical section of 4-in.-dia Inconel pipe with a 5-ft-long reaction zone; the pellets are gravity-fed from a sealed hopper at the top, and the product is discharged through a metering valve into a sealed hopper at the bottom. A small vibrator is attached to the metering valve to promote uniform flow of solids. The reactor is externally insulated and heated in six 1-ft-high zones so that conditions are approximately adiabatic. Nozzles are provided at 1-ft intervals for introducing reactant, coolant, and heating gases and for discharging the off-gases. Bed temperatures are measured every 6 in., and wall and heating-jacket temperatures are measured at the mid-point of each heated zone. Heat exchangers preheat the gases introduced through the top and bottom gas inlets.

Metallographic examinations of the Inconel reactor after 200 hr of operation showed that there was no significant corrosion at temperatures averaging up to 700°C, and analyses of the UF_4 product indicated that the nickel contamination of the product from a large-scale reactor should be less than 10 ppm.

[3] W. C. Moore, *Development Engineering Progress Report, K-25 Plant, February and March 1953*, K-1002, Parts 2 and 3.

[4] H. A. Bernhardt, E. W. Powell, and J. G. Schaffner, *Conversion of Uranyl Fluoride to Uranium Tetrafluoride with Gaseous Reactants*, K-404 (June 1, 1949).

[5] B. M. Pitt, E. L. Wagner, and A. J. Miller, *The Ammonia Reduction and Its Application to the Production of Green Salt*, C-2.355.2 (Dec. 29, 1945).

5. HOPE PROJECT

The original Hope Project study, which was made in the summer of 1953,[1] has been reactivated, and a two-year Hope program has been budgeted for fiscal years 1954 and 1955. The purpose of this program is to study in greater detail all ideas presented in the original work, plus all others that show promise of effecting reductions in radiochemical processing costs. At present, much of the effort on the project will be directed toward testing the features of a Hope type of design for a Savannah River U^{235} separation facility.

Under the present program, only a small amount of effort will be expended in chemical development, since the processes for uranium and thorium have already been exhaustively studied. Most of the effort will be spent in design and equipment development to show where and how economies can be effected in plant and equipment, and in theoretical studies to determine the over-all economics of such items as fuel shipping, SF accountability, and SF inventory charges. The areas of radiochemical processing which now appear most susceptible to cost reduction are discussed below.

Criticality. In many cases, "always-safe" equipment has been designed by an overly conservative method, which has led to the high cost of radiochemical processing. A new approach to the criticality problem is a primary aim of the Hope study.

Underwater Maintenance. Radiochemical plants are currently being maintained, either remotely, which is effective but expensive, or directly, a method which has not been proved to be entirely satisfactory under conditions of very high radioactivity. An extensive study and development program is planned for establishing a maintenance philosophy which may incorporate the best features of both remote and direct maintenance. One possible solution is underwater maintenance, a concept to which a large amount of attention has been directed by the Vitro Corporation.

Radioactive Waste Disposal. The cost of storage and/or disposal of radioactive wastes must be materially decreased if the cost of radiochemical processing is to be appreciably reduced. Means of achieving such a decrease in cost must be studied in detail, and a program to determine the feasibility of disposal methods other than storage in stainless steel tanks will be continued.

SF Accountability. A preoccupation with very accurate accounting for gram quantities of source and fissile materials has contributed much to high chemical-plant costs in a "weapons economy." A more reasonable approach to this accounting must be developed as an aid to the reduction of processing costs, and such a philosophy will be the aim of a design study.

Inventory. Design studies will be initiated which will be directed toward reducing radiochemical plant costs for inventory charges of fertile and fissile materials by reduction of plant inventories through shorter processing cycles and/or reduction of inventory charges per gram of such materials.

Plans are now being made for the construction of a Hope type of addition to the Metal Recovery Building to house new head-end and first-cycle equipment of sufficient capacity to process 1 ton of either natural uranium or thorium per day. Design and construction of the underwater-maintained facility, exclusive of equipment, will be accomplished this fiscal year, and a few equipment pieces may be installed by the end of the period. The installation of equipment will progress slowly, however, because several designs will be tested for underwater maintenance so that each can be evaluated and the optimum one can be selected for a final Savannah River U^{235} plant design.

Continuous Slug Charger. A mockup of a conveyer suitable for continuously charging spent uranium-aluminum alloy fuel elements of the Savannah River type at the rate of two per minute to a continuous dissolver[2] is being evaluated. This device, operating on a bolt-action principle, pushes slugs up a tube which extends nearly vertically, through the cell in which the dissolver is located, 20 ft from the bottom of the canal to the top of the dissolver. Use of this charger precludes the necessity of using heavily shielded carriers for handling the slugs in unshielded areas between the canal and dissolver.

The slug charger was operated in air, at 100% efficiency, with dummy Savannah River slugs. Six hundred slugs were conveyed continuously,

[1] R. A. Charpie *et al.*, *A Chemical Reprocessing Plant for a Nuclear Power Economy.* (*Project Hope*)., ORNL-1638 (Feb. 5, 1954).

[2] Designed and constructed by the ORNL Engineering and Mechanical Division.

without any failures. When submerged in 10 ft of water, the unit operated at 90% efficiency; that is, 720 slugs were delivered in 400 min. The underwater efficiency could probably be increased by adding a weight mechanism to hold the slugs in position in the hopper, since buoyancy effects caused them to ride up and out of the ejection position.

A color movie showing the operation of the continuous charger was prepared.

6. ECONOMIC STUDIES[1]

Idaho Chemical Processing Plant Costs. The final distribution of costs incurred in the design, construction, and placing in operation of the Idaho Chemical Processing Plant, a plant for the recovery of enriched uranium from reactor-irradiated uranium slugs, has been completed.[2] The total capital cost of the plant was $31,106,000.

With the exception of development costs, the complete breakdown of costs to the customer, the AEC, is presented in Table 6.1. As far as practical, special equipment that is unique to a radiochemical processing plant has been listed separately from conventional major process equipment. Costs for the process building and waste disposal building, with their attendant service costs, include items peculiar to radiochemical building construction, such as concrete required for shielding (in addition to structural needs), stainless steel cell linings, and special pipe plugs. The percentages of land costs and improvements thereon charged to the AEC include a prorated share of the IDO Central Facilities, which are shared by all installations at the National Reactor Testing Station.

[1]For other economic studies see Secs. 8, 10, and 11.

[2]W. G. Stockdale and P. L. Robertson, *An Engineering Appraisal of the Idaho Chemical Processing Plant*, ORNL-1791 (to be published); an "Official Use Only" edition is being published as ORNL-1792, *A Cost Analysis of the Idaho Chemical Processing Plant.*

TABLE 6.1. COST OF IDAHO CHEMICAL PROCESSING PLANT

Item	Cost		
	Material	Installation Labor	Total
Process Building			
Building and services (63,174 ft^2 total floor area; 9,775 ft^2 cell area)	$1,024,879	$1,486,130	
Major process equipment (tanks, vessels, pumps, etc., excluding gaseous- and liquid-waste systems)	591,243	87,488	
Pipe, valves, and fittings	908,307	826,463	
Instruments and controls	351,600	223,388	
Electrical (process)	40,774	52,992	
Special equipment (sample galleries, periscope, chargers, carriers, radiation-detection instruments, etc.)	672,270	89,233	
Subtotal	3,589,073	2,765,694	$ 6,354,767
Waste Disposal Building			
Building with services (15,687 ft^2 total floor area)	384,888	474,004	
Liquid-waste collection and disposal system (includes collection tanks, two 318,000-gal stainless steel storage tanks, evaporators, piping, etc.)	1,003,041	611,555	
Gaseous-waste collection and disposal system (includes dissolver off-gas processing system, stack, ducts, fans, etc.)	617,843	226,099	
Subtotal	2,005,772	1,311,658	3,317,430
Administration and laboratory building with equipment (44,708 ft^2 floor area)	1,453,009	768,839	2,221,848
Fuel storage building with equipment (19,319 ft^2 floor area)	641,258	267,298	908,556
Service building with equipment (boilers, compressors, fire pumps, etc.) (9482 ft^2 floor area)	391,659	301,673	693,332
Yard facilities (roads, fencing, electrical substations, guard houses, storage tanks, acid unloading, etc.)	426,713	514,272	940,985
Total direct material and labor	$8,507,484	$5,929,434	14,436,918
Construction overhead, including fee			7,001,956
Engineering design and inspection, including fee			3,773,357
Total physical plant costs			25,212,231
Percentage of land cost and improvements charged to AEC			1,825,993
Training and preoperational costs			2,927,675
Customer's (AEC) incurred expense			1,140,000
Total Capital Costs			$31,105,899

7. ARE FUEL RECOVERY AND REPROCESSING

Solvent-Extraction Process. The chemical process originally considered[1] for the recovery and decontamination of U^{235} from ARE fuel (UF_4-ZrF_4-NaF) consists in dissolution of the fuel in an aqueous aluminum nitrate–nitric acid solution, solvent extraction with 5% tributyl phosphate in a kerosene diluent, and isolation on an ion-exchange resin column. In one solvent-extraction cycle, a gross beta decontamination factor of greater than 10^4 and uranium recovery of greater than 99.9% are obtained.

Additional studies[2] have been made to determine the extraction conditions that will give maximum decontamination. With TBP concentrations in the range 1 to 30 vol % and feed nitric acid concentrations of 0.5 and 3 *M*, the best gross beta decontamination was obtained at a TBP concentration of 7.5% or less, regardless of acidity. Three extraction and scrub stages were used, with stoichiometrically neutral aluminum nitrate solution as the scrubbing agent. The salting strength of the aluminum nitrate feed solution was controlled by varying the aluminum nitrate content to obtain a uranium distribution coefficient of about 4 at the feed plate and 0.5 at the last scrub stage. The ruthenium and total rare-earth distribution coefficients were shown to have approximately second-order dependence on TBP concentration at constant uranium distribution.

Fluoride-Volatility Process. A fluoride-volatility process for ARE fuel, based on elemental fluorination of the molten NaF-ZrF_4-UF_4, is being investigated because of its attractiveness with respect to cost, inventory of fissionable material, waste disposal, and safety of operation. The process as applied to an aircraft reactor consists in three steps: (1) recovery of the uranium from the used fuel by sparging the molten salt with fluorine to convert the UF_4 to UF_6 and to drive out the UF_6, (2) separation of the uranium hexafluoride from excess fluorine by trapping the volatilized uranium salt in a cold trap and resubliming the UF_6 from it, and (3) fabrication of a new fused salt for the reactor by absorbing the partially decontaminated UF_6 in molten ZrF_4-NaF.

In preliminary tests,[3,4] more than 99.95% of the uranium tetrafluoride contained in the fuel was converted to the volatile hexafluoride with a gross beta decontamination factor of 100 to 300. Resublimation of this uranium hexafluoride resulted in an over-all decontamination factor of 4000 to 5000. Since, in the absence of excess fluorine, UF_6 is soluble in molten NaF-ZrF_4, the resublimed product can be dissolved, probably according to the following reaction:[5]

$$UF_6 + NaF \longrightarrow NaF \cdot UF_6 \longrightarrow NaF \cdot UF_4 + F_2 .$$

Experimental engineering studies on the contacting of fluorine gas with molten salt in the fluorination step indicate that a Reynolds number of 3000 will give optimum contact between gas and liquid. The Reynolds number of the system was independent of the variables studied over a fuel specific-gravity range of 1 to 2.95, a viscosity range of 1 to 40 centipoises, and hole-diameter/column-diameter ratios from 1:16 to 1:96, liquid-depth/column-diameter ratios from 2:1 to 18:1, and a plate free-area range of 8 to 30.7%.

The process is adaptable to the complete decontamination of enriched fuels. In laboratory studies a decontamination factor of approximately 20,000, with a uranium loss of less than 0.001%, was obtained by scrubbing the fission-product fluorides from the uranium hexafluoride with a molten NaF-ZrF_4 salt bath at 650°C, in which the UF_6 is insoluble in the presence of excess fluorine. Fractional distillation of the UF_6 from this step, to complete the decontamination, could be carried out in equipment with only light shielding.[6] Since uranium-zirconium and other alloys can be dissolved at reasonable rates by hydrofluorination in a fused salt of the NaF-ZrF_4-KF type, this process also provides a method of processing heterogeneous reactor fuels.

[1] D. E. Ferguson, G. I. Cathers, and O. K. Tallent, *ANP Quar. Prog. Rep. June 10, 1953*, ORNL-1556, p 101.

[2] The experiments are discussed in greater detail by F. N. Browder, D. E. Ferguson, G. I. Cathers, and E. O. Nurmi in *ANP Quar. Prog. Rep. March 10, 1954*, ORNL-1692, p 12.

[3] G. I. Cathers, *Recovery and Decontamination of Uranium from Fused Fluoride Fuels by Fluorination*, ORNL-1709 (June 9, 1954).

[4] F. N. Browder, G. I. Cathers, D. E. Ferguson, and E. O. Nurmi, *ANP Quar. Prog. Rep. March 10, 1954*, ORNL-1692, p 42.

[5] H. Martin, A. Albers, and H. P. Dust, *Z. anorg. u. allgem. Chem.* 265, 128 (1951).

[6] The experiments are discussed in greater detail by D. E. Ferguson, G. I. Cathers, and M. R. Bennett in *ANP Quar. Prog. Rep. Sept. 10, 1954*, ORNL-1771, p 12.

8. HOMOGENEOUS REACTOR FUEL AND BLANKET PROCESSING[1]

Fuel Reprocessing. Preliminary studies[2] indicate that the chemical processing associated with a two-region thermal breeder reactor can be carried out at a cost of 1.1 mills per kilowatt-hour of electricity produced, exclusive of reactor inventory charges. The processing scheme considered consists in removing the insoluble fission and corrosion products from the uranyl sulfate core solution at high temperatures by a solid-liquid centrifugal separator on a one-day cycle and in removing the soluble fission and corrosion products from the combined core solution and thorium oxide slurry blanket in a 200-kg/day Thorex plant on a 180-day cycle. This estimate was based on a three-reactor power station producing 1350 Mw of heat. Inventory charges for D_2O and U^{233} in the reactor would increase the total costs to $12.94 per megawatt-day of heat or 2.32 mills per kilowatt-hour of electricity produced. By this processing scheme, the neutron poison level of the reactor core due to fission and corrosion products would be held to less than 5.4%.

Calculations[3] of radiological hazards of activities produced during operation of homogeneous reactors indicate that I^{131}, Ba^{140}-La^{140}, and total rare earths are biologically the most dangerous activities, especially where short-term exposures involving a small leak (of the order of 0.5% of the reactor fuel) are concerned. The relatively lesser importance of Sr^{89} and Sr^{90}-Y^{90} as shown by the calculations, in contrast to their importance as indicated by other studies, probably reflects a lack of attention in this case to the effects of earth and stream pollution on life cycles of plants and animals in the long-term considerations of fission-product dispersal. The calculations point out the need for a process to control the I^{131} activity level during reactor operation, as well as that of the rare earths, strontium, and other fission products.

Fission- and Corrosion-Product Chemistry. Solubility data obtained with a mixture of rare-earth sulfates, approximating the mixture obtained from fission, in simulated reactor fuel solution indicate that the amount of total rare-earth sulfates dissolved in the fuel at 275°C does not exceed 0.1 g per kilogram of H_2O. The equilibrium solubility of $Ce_2(SO_4)_3$ was determined to be less than 0.01 g per kilogram of H_2O under these conditions and that of $Nd_2(SO_4)_3$ to be 0.04 g per kilogram of H_2O. These data indicate that the neutron-poison level of rare earths in the reactor core can be held to less than 1.5% by removing insoluble rare-earth sulfates on a one-day cycle. Many other fission and corrosion products have been observed to have a very low solubility in the fuel solution under reactor conditions. These elements include barium, zirconium, niobium, iron, chromium, strontium, ruthenium, and manganese. The most important poisons not removed by precipitation and solid-liquid separation are Cs^{135}, Tc^{99}, I^{131}, and Ni. Efforts to remove these elements along with the insoluble products have not yet succeeded.

Data obtained several days after the HRE shutdown indicated that only 2% of the hard-gamma emitters were in solution, even at room temperature. This indicates that a solid-liquid separation will effectively limit the buildup of long-lived gamma-emitting fission products in the fuel solution. A possible exception to this is I^{131}, which, as mentioned above, is the primary radiological hazard associated with a fuel leak from a homogeneous reactor. Experimental work has shown that free iodine is present after a solution of iodide, iodate, or free iodine is heated to 250°C. Other data indicate that a large percentage of this iodine can be removed by placing finely divided silver in the vapor phase over the iodine-containing solution.

Engineering Development. Design, construction, and installation have been completed on the first of three loops planned for use in homogeneous reactor chemical-processing studies. This loop, loop A, will be used to precipitate rare earths in a dynamic system and to separate the solids from the solution in order to measure their physical properties. This loop is made of ½-in. schedule 80 pipe, is approximately 15 ft long, and has a total volume of less than 2 liters. It is pressurized by steam and oxygen in a 500-ml vessel mounted on top. The pressurizer and loop proper are heated by electric resistance heaters. The operating temperature of the loop is 250 to 275°C, and the pressure

[1] Details of the studies are given in the HRP progress reports, for example, *HRP Quar. Prog. Rep. July 31, 1954*, ORNL-1772.

[2] E. D. Arnold *et al.*, *Preliminary Cost Estimation: Chemical Processing and Fuel Costs for a Thermal Breeder Reactor Power Station*, ORNL-1761 (in preparation).

[3] E. D. Arnold and A. T. Gresky, *Relative Biological Hazards of Radiations Expected in Homogeneous Reactors TBR and HRP*, ORNL-1765 (in preparation).

1000 psi. Uranyl sulfate solution will be circulated at 2 to 5 gpm, with a maximum linear velocity of about 8 fps. The loop is equipped with a feed-injection system and samplers.

Development of Solid-Liquid Separator. The continuous separation of finely divided solids from either the fuel solution or the uranyl sulfate blanket solution of the plutonium producer (see below) under reactor operating conditions requires a device that will produce strong centrifugal forces. These forces can be obtained with motor-driven centrifuges or with solid-liquid hydroclone separators of small diameter and designed for high feed-flow velocities. The centrifuge study has been contracted to two centrifuge-manufacturing specialists, Arthur D. Little, Inc., and The Sharples Corporation, while the development of the hydroclone separator is being studied by the Chemical Technology Division at ORNL. The investigation of hydroclones has included studies of standard commercial units and of various experimental designs.

The only piece of commercial equipment found to have efficiencies high enough to be of interest is the DorrClone TM-3. In this model there is a three-stage arrangement of 96 hydroclones made of Bakelite, 32 per stage, each hydroclone being 10 mm in internal diameter and 3.5 in. in length. One of the unit hydroclones from the TM-3 model was found to be capable, at room temperature, of concentrating in the underflow stream the particles of ThO_2 as small as 1.2 μ with about 50% efficiency and particles of 2.0 μ with about 90% efficiency. The ThO_2 was suspended in water for the experiments. When corrections are made for viscosity and density, the behavior of ThO_2 particles under these test conditions should be similar to that of the same-size rare-earth sulfate particles in the core system. PuO_2 particles in the blanket system of the K-49 reactor, to perform comparably, could be 0.43 times this size. In the light of data currently being evaluated, these values are conservative.

The 10-mm-dia hydroclones worked best at feed-flow rates of 0.6 to 1.0 gpm, and they required a pressure of 21 psi at the low flow rate and 64 psi at the higher rate. These flow rates are far in excess of those needed, and work is in progress to construct a hydroclone unit that will operate properly at a lower flow rate.

Plutonium-Producer Blanket Processing. The primary objective in processing the uranyl sulfate solution blanket of the plutonium producer is the rapid removal of plutonium and perhaps neptunium in order to minimize Pu^{240} buildup. The proposed process will consist essentially in concentrating the precipitated PuO_2 by means of a hydroclone liquid-solid separator and removing the concentrated slurry for D_2O and plutonium recovery.

The solubility of Pu(IV) in 1.0 to 1.6 *m* uranyl sulfate solution at 300°C was redetermined as 3.0 ± 0.6 mg per kilogram of H_2O, which agrees with the previously reported value.[4] As much plutonium as 0.1 mg/cm^2 was adsorbed on both titanium and type 347 stainless steel without equilibrium being attained. Less than 1 min was required for half the plutonium to precipitate, at 250°C, from a 1.35 *m* uranyl sulfate solution with a Pu(IV) concentration of 0.1 g per kilogram of H_2O.

Although the solubility of neptunium in 1.2 *m* uranyl sulfate at 275°C under 120-psi oxygen and 240-psi hydrogen is greater than 100 mg per kilogram of H_2O, it is encouraging to note that a preliminary value of the Np^{239} cross section of 50 ± 50 barns has been obtained. If the cross section is as low as 50 barns, it appears that it will not be necessary to remove the neptunium from the reactor along with the plutonium.

Decontamination of the HRE. The HRE, prior to being dismantled, was decontaminated by two treatments with each of the following reagents: 8 *M* nitric acid, alkaline tartrate (10% sodium hydroxide–2.5% tartaric acid), and 5% nitric acid, together with numerous water washes. Cell activity levels were reduced by a factor of 20 to 25, but further decontamination could not be obtained with the same reagents. After the system had been partially dismantled, some pieces of type 347 stainless steel taken from the fuel-circulating system, which were covered with a rust-colored corrosion scale and gave a reading of several roentgens per hour per square centimeter at contact, were further decontaminated by a factor of 100 by removal of the scale. Scale removal could be accomplished by hydrochloric, sulfuric, nitric-hydrofluoric, or oxalic acid solution, but, because of the corrosion and storage problems with mineral acids, oxalic acid would be perferred.

The radioactivity remaining in the reactor system after decontamination was almost entirely due to Zr^{95}-Nb^{95}. The activity of corrosion specimens

[4]See, for example, F. R. Bruce *et al.*, *HRP Quar. Prog. Rep. March 15, 1952*, ORNL-1280, p 95.

of four metals – titanium, zirconium, and types 304L and 347 stainless steel – was Zr^{95}-Nb^{95} in all cases, but the stainless steels were contaminated by relatively more niobium (80% of activity) than were the titanium and zirconium specimens (60% of the activity was niobium).

The distribution of fission products between the HRE fuel solution and the decontamination reagents is of interest because in some cases it is the only information available concerning the behavior of fission products produced in the HRE fuel solution. All the cesium, 30 to 50% of the cerium and strontium, and 80 to 90% of the rare earths other than lanthanum and cerium were in the fuel solution. The other fission products, including lanthanum, which are all strong gamma emitters, were mostly in the decontamination reagents. The fuel contained about 20% as much iodine as did the decontamination reagents; 5% as much barium, lanthanum, and ruthenium; and 2% (or less) as much zirconium and niobium. Lanthanum was found throughout with its parent, barium. A large part of some fission products was not found – only 10% of the ruthenium, for example. It is likely that these fission products, or their precursors, were volatilized. Only 10 to 20% of the plutonium produced by the HRE was found in the fuel, the rest being removed by the decontamination reagents.

9. HOMOGENEOUS REACTOR SLURRY STUDIES

There are indications that aqueous thorium oxide slurries, which have been under investigation for more than a year,[1] are satisfactory for use in the blanket of a thermal power breeder reactor. Thorium oxide prepared by calcination at 650°C of thorium oxalate or formate forms a slurry that is reasonably stable at 250°C and is not excessively abrasive. Thorium oxide acts as a recombination catalyst for the hydrogen and oxygen formed from water under reactor conditions. Studies are being made on effects of irradiation on slurries, gas recombination rates, and engineering-scale preparation of thorium oxide.

Equipment for the experimental production of 5-kg lots of thorium oxide and for the routine production of 100-kg lots has been installed and put in operation. The currently preferred process for making thorium oxide consists in precipitating thorium oxalate from thorium nitrate solution by oxalic acid, drying the thorium oxalate, and calcining it to thorium oxide by heating at 370°C for 4 hr and at 650°C for 4 hr in muffle furnaces. The experimental equipment is so designed that it can be easily modified for use with other methods of preparation, and the engineering data obtained in its operation will be used to evaluate production methods and to choose the continuous process most suitable for installation at a reactor site.

Investigations of the effects of irradiation on slurries have included studies on thorium oxide–uranium oxide slurry systems as well as on pure thorium oxide slurries.[2] Two in-pile irradiations were carried out in hole 11 of the ORNL Graphite Reactor at 200 to 300°C and at a flux of 7×10^{11} neutrons/cm^2/sec; in one irradiation a pure slurry (530 g of thorium per kilogram of water) was used, and in the other a slurry of the same thorium concentration but containing 4 mole % (93% enriched) uranium oxide was employed. As expected, no radiolytic gas production or pronounced caking was observed in the pure slurry after 30 days of irradiation at 250°C. With the enriched slurry a steady-state hydrogen and oxygen pressure of 2000 to 2500 psi was observed at 210 to 220°C. However, when the temperature was increased to 250°C or higher, the pressure in the irradiation bomb dropped rapidly to the pressure of steam, thus indicating gas recombination.

In out-of-pile studies on gas combination under simulated in-pile conditions with the 4% uranium oxide–thorium oxide slurry, hydrogen combined with oxygen at a rate of 0.15 mole of hydrogen per hour per liter of slurry at 290°C and 0.05 mole/hr/liter at 270°C at a partial pressure of hydrogen plus oxygen of 1000 psi. The mixed oxide used in this experiment was prepared by reacting UO_3

[1] See *HRP Quar. Prog. Rep. June 30, 1954*, ORNL-1753, and earlier HRP progress reports.

[2] The experiments are discussed in greater detail in *HRP Quar. Prog. Rep. April 30, 1954*, ORNL-1753, p 172.

and ThO_2 in water at 250°C; the original ThO_2 was prepared from thorium oxalate by pyrohydrolysis followed by calcination at 350°C. A slurry of this thorium oxide alone was only 40% as efficient in combining the hydrogen and oxygen as was the mixed oxide, and Ames thorium oxide was approximately 10% as efficient. All the gas combination rates observed in the laboratory were probably diffusion-controlled, but the differences in the rates suggest that the method of slurry preparation and the uranium content markedly influence the catalytic activity of a thorium oxide slurry.

Mixtures of $UO_3 \cdot H_2O$ platelets and various thorium oxide preparations in a uranium-to-thorium ratio of 1:50 reacted more or less completely at 250°C to give orange-colored solids, presumably solid solutions of UO_3 in ThO_2. The thorium oxides were prepared by the pyrohydrolysis and thermal decomposition of thorium oxalate and by the calcination of thorium hydroxide. Under hydrogen pressure at 250°C the uranium in the mixed oxide was reduced and crystal growth was promoted. The mixed-oxide studies were made primarily to support the irradiation-study program, but the results may be applicable if a one-region thorium oxide–uranium oxide system becomes interesting in the HRP.

Thorium hydroxide precipitated from thorium formate solution and dried at 105°C was amorphous to x-rays. Autoclaving the moist hydroxide in water at 250°C or drying the hydroxide at 500°C converted it to crystalline ThO_2 but did not appreciably increase its abrasiveness. Electron-diffraction patterns of these materials indicated that they are all crystalline.

The addition of 10 mole % Al_2O_3 to ThO_2 by the coprecipitation of the hydroxides and subsequent calcination of the mixture at 650°C inhibited thorium oxide crystal development but did not decrease the abrasiveness of the calcined product.

The Reactor Experimental Engineering Division observed that concentrated thorium oxide slurries (prepared from thorium formate) became plastic upon being pumped at 250°C and cooled to room temperature. In studies on this effect, the addition of 0.13% sodium silicate, $Na_2O(SiO_2)_{3.25}$, solution restored the fluidity of the system to essentially that of water. Sodium carbonate, sodium pyrophosphate, and sodium hexametaphosphate were also found to be good dispersing agents for thorium oxide slurries. Particle-size analyses and x-ray-diffraction studies on the pumped material and the effectiveness of deflocculents in restoring fluidity to the pumped slurry suggest that the increase in viscosity on pumping results primarily from a degradation of the slurry particles and subsequent flocculation of the fragments.

10. FEED MATERIALS PROCESSING

Metallex Process. Thorium production at the Feed Materials Production Center, Fernald, Ohio, by reduction of thorium fluoride is expensive because of the high cost of the redistilled calcium used for the reduction and because of the high costs inherent in a batch process. The Metallex process, which is continuous up to the final semicontinuous casting step, has been suggested for preparation of massive thorium metal. There are three steps in the process:

1. A common thorium compound is converted to thorium tetrachloride.
2. The thorium tetrachloride in an anhydrous solvent solution is reduced by alkali amalgam to form a thorium quasi amalgam.
3. Massive thorium metal is separated from the quasi amalgam.

A conservative estimate of the cost of producing massive thorium metal from thorium tetrachloride (see Fig. 10.1), excluding the cost of the tetrachloride, is $1.28 per pound of thorium (see Table 10.1). The cost of producing thorium tetrachloride from thorium nitrate (see Fig. 10.2) or some other starting compound is expected to be less than the cost of steps 2 and 3; however, final cost data are contingent upon further laboratory work. The physical feasibility of the process, starting with thorium oxide or oxalate, has been demonstrated on a laboratory scale.

In the laboratory-scale studies on the first step, anhydrous thorium tetrachloride was prepared from thorium oxide or oxalate by mixing with carbon and chlorinating with chlorine, carbon tetrachloride, or a mixture of the two in a single step. The

TABLE 10.1. SUMMARY OF COST OF CONVERTING $ThCl_4$ TO THORIUM METAL BY METALLEX PROCESS

Basis: 1000 short tons of thorium per year

Item	Cost
Plant Investment	
Total physical plant	$2,832,000
Construction overhead and contractor's fee (50% of total physical plant)	1,416,000
Engineering (20% of total physical plant)	566,000
Total	4,814,000
Construction interest (2% of total)	96,000
Contingency (30% of total)	1,445,000
Working capital (including material inventory and in-process materials, but no product storage, plus cash for one month of operation)	348,000
Preoperational charges (10% of annual operating cost)	257,000
Total plant investment costs	$6,960,000
Annual Operating Costs	
Variable costs	
Raw material, excluding $ThCl_4$	$ 130,000
Operating supervision	24,000
Operating labor	130,000
Control laboratory personnel and supervision	93,000
Maintenance	340,000
Operating supplies	17,000
Utilities	100,000
Packaging, storage, spoilage, reruns, and other	26,000
Total annual variable costs	$ 860,000
Fixed costs	
Depreciation	$1,096,000
Penalty charges	3,860
License fee or royalty	2,170
Overhead	604,000
Total annual fixed costs	$1,706,000
Total annual operating costs	$2,566,000
ANNUAL OPERATING COST PER POUND OF THORIUM	$1.28

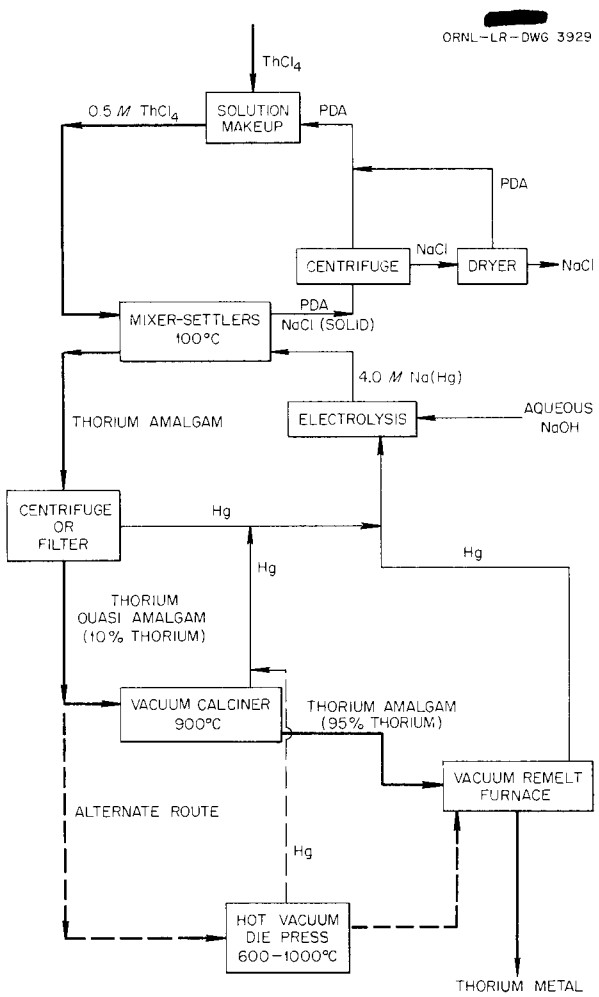

Fig. 10.1. Flowsheet for Conversion of Thorium Tetrachloride to Thorium Metal by the Metallex Process.

process was carried out in a fixed bed at temperatures varying between 400 and 700°C for 1 to 5.5 hr. Maximum conversion, 90%, was obtained after 5.5 hr at 500°C. The rate of chlorination of the product (with 80 to 90% conversion) was shown to be more than 30 times as fast at 400°C if a carburization step was introduced before the chlorination. This carburization was carried out at 2000 to 2200°C in a hydrogen atmosphere according to the following reaction:

$$ThO_2 + 4C \longrightarrow ThC_2 + 2CO \ .$$

Solutions of $ThCl_4$ with concentrations up to 0.55 *M* were prepared by leaching the chlorination product with anhydrous propylenediamine at its boiling point. The thorium was reduced by agitation of the $ThCl_4$-PDA solution with lithium or sodium amalgam in a Rushton type of contactor at 25 to 120°C. Thorium quasi amalgams were formed. Reduction yields, as measured by the percentage of thorium transferred from the organic to the mercury phase, ranged from 4 to 85%. With solvent water concentrations of 0.3% or higher, the yield was decreased as a result of precipitation of a nonreducible thorium compound. Reaction rates were directly proportional to agitation rates. Other solvents which were tested and which proved to be unsatisfactory were ethyl alcohol; isopropyl alcohol; the hydrocarbons Amsco, hexane, dodecane, diphenyl, and benzene; dimethylformamide; pyridine; tri-*n*-butylamine; and tri-*n*-butyl phosphate. Hydrocarbons, pyridine, and tri-*n*-butylamine were not good solvents for thorium chloride, and the others were decomposed by alkali metal amalgams.

An amalgam concentrate enriched in thorium by a factor of 10 was separated from the amalgam phase by centrifugation or filtration. The efficiency of separation was higher when the viscous thorium amalgam was first washed with water to remove sodium and then heat-digested under diphenyl for an hour. Thorium was recovered from the concentrate by distilling off the mercury at reduced pressure. Under 0.5 atm of purified argon at 500°C and under 1 mm Hg argon pressure at 800°C, a pyrophoric powder was produced that contained 27 and 5%, respectively, residual mercury. X-ray-diffraction analysis showed the presence of thorium dioxide and an unidentifiable species, probably a thorium mercuride.

In preliminary studies, a thorium amalgam was prepared by dissolving in mercury a thorium metal powder prepared from thorium hydride. A 15-g button of thorium metal containing less than 4 ppm of residual mercury was made by heating (above 1850°C) this amalgam to distill off the mercury, during which process the thorium melted. Subsequent experimentation has shown that amalgam from the reduction reactor, water washed and digested under a high-boiling hydrocarbon at 240°C, can be filtered to remove more than 95% of the thorium as a concentrate containing about 7 wt % thorium. This concentrate was cold-pressed under 100,000 psi to form a 60-g pellet containing approximately 15% thorium. Mercury was evaporated

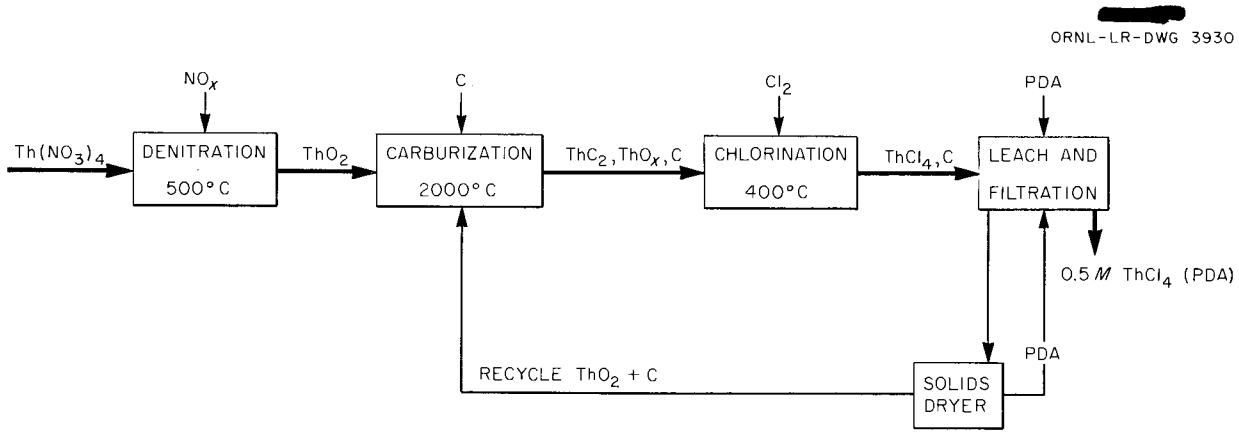

Fig. 10.2. Flowsheet for Preparation of Thorium Tetrachloride from Thorium Nitrate by the Metallex Process.

from the pellet in a vacuum induction furnace, and a 9-g button of thorium metal was obtained.

Costs. A preliminary study on two steps of the Metallex process for production of metallic thorium indicated that it may be possible to produce massive thorium metal from thorium tetrachloride for $1.28 per pound of thorium. The results of the study, which was based on a hypothetical plant producing 1000 short tons of thorium per year, operating 250 days per year, are given in Table 10.1. Detailed cost studies have not been made on the conversion of thorium nitrate, a logical compound to use as a starting chemical, to thorium tetrachloride, but it is estimated that thorium nitrate could be converted to thorium metal by the Metallex process at a cost of somewhat less than $2.60 per pound of thorium.

In the flowsheet used for the studies a 0.5 *M* solution of thorium tetrachloride in PDA is contacted countercurrently with 4 *M* sodium amalgam at 100°C in a mixer-settler. The thorium is replaced by the sodium and is carried by the mercury. The mercury phase is heated at 255°C under a blanket of liquid diphenyl in order to improve the subsequent mercury separation, and it is then separated by centrifugation as a quasi amalgam containing approximately 10 vol % mercury. The quasi amalgam is dried in a vacuum dryer at 900 to 1000°C to give a powder that is approximately 95 wt % thorium. The powder would be charged to induction furnaces operating at approximately 1800°C, where final separation of the mercury and casting of the metal ingots occurs. The spent thorium tetrachloride–PDA solution (0.05 *M*) would be recycled to the leaching tank, where the feed concentration would be re-established. Satisfactory conversion of thorium tetrachloride to thorium powder containing 5% mercury has been demonstrated on a laboratory scale, but experiments have not been completed on the conversion of the metal powder to ingots. The formation of a powder may be eliminated, in view of the demonstration of the feasibility of melting a pressed cake of quasi amalgam.

Electrochemical Reduction of Thorium Tetrachloride. Electrochemical deposition of thorium into a molten-metal cathode was investigated as a possible means of preparing thorium metal from its salts. Small amounts of metallic thorium were deposited in molten zinc and bismuth cathodes from a lithium chloride–potassium chloride eutectic bath containing approximately 10 mole % thorium tetrachloride at 400 to 700°C, but none was deposited in magnesium cathodes. At the surfaces of all cathodes there was a pyrophoric deposit of thorium. The low yields were thought to be due to the poor quality of the thorium tetrachloride used as the electrolyte. In these systems the thorium would be recovered continuously from the molten cathode by distillation of the zinc or bismuth, or by filtration in the case of the thorium-magnesium slurry.

11. VOLATILITY STUDIES

Molten-Salt-Dissolution Fluoride-Volatility Process. The volatility method of processing the homogeneous ARE fuel (see Sec. 7) can be adapted to processing of heterogeneous fuel elements such as those composed of zirconium-uranium alloys or stainless steel–uranium mixtures. The suggested process consists in dissolving the fuel element in a molten fluoride salt, to form a solution of uranium tetrafluoride, and processing the molten uranium tetrafluoride solution by the scheme outlined for ARE fuel. In preliminary experiments, the variables indicated to be the most important in controlling the rate of metal dissolution in molten fluoride baths for eventual processing by a volatility method were bath composition, bath temperature, hydrogen fluoride feed rate, and the metallurgical history of the metal. By selection of a suitable combination of bath composition and temperature, the penetration rate for uranium could be varied from 0.1 to 17 mils/hr, and the rate for zirconium could be varied from 22 to 288 mils/hr. The independent effect of temperature on the zirconium dissolution rate was rather slight in a typical bath (ZrF_4-KF-NaF, 44.5-48.5-7 mole %), but the rate doubled for every 140°C rise in temperature in the vicinity of 600°C. Changing the hydrogen fluoride feed rate from 83 to 280 mmoles/hr approximately doubled the penetration rate of zirconium at 675°C. This effect was probably primarily due to greater agitation of the salt because of the more rapid gas flow and was of approximately the same magnitude as in other types of diffusion-limited surface reactions. A zirconium specimen that had undergone considerably less cold rolling in preparation than had a second specimen was found to be less reactive by a factor of 2.5.

Recovery of uranium from reduction-bomb slag by fluorination to form volatile uranium hexafluoride was shown to be feasible. Uranium losses of only 0.017% were demonstrated at atmospheric pressure and 500°C for −100 mesh slag with an initial uranium content of 1 to 3%. Fluorine consumption, when a tenfold excess was used, was limited to that used in fluorinating the uranium, since the bulk of the material is unreactive magnesium fluoride.

Costs of Recovering Uranium and Plutonium from Irradiated Uranium Metal by the Chlorine Trifluoride Volatility Process.[1] A directly maintained chlorine trifluoride volatility plant designed to process 3 metric tons of uranium per day was estimated to have a fixed investment cost of $32,900,000. The feed was assumed to contain 550 g of plutonium per metric ton of uranium and to be cooled 120 days after irradiation; the products were assumed to be uranium hexafluoride and a concentrated aqueous plutonium nitrate solution. The annual cost of such a plant can be broken down as follows:

	Total Cost	Cost per gram of Plutonium
Amortized capital cost ($6\frac{2}{3}$ years' amortization, 2% interest on investment)	$5,264,000	$8.74
Operating cost	3,264,000	6.62
Working capital	7,000	0.01
Total operating cost less inventory charges	9,259,000	15.4
SF inventory cost (16%)	7,056,000	11.7
Total	$16,315,000	$27.1

Costs for a bromine trifluoride–bromine pentafluoride volatility plant were estimated to be practically the same as the corresponding costs of the chlorine trifluoride plant.

Installation and operating costs for a Purex plant of the same capacity, exclusive of SF charges, plus an estimated charge of $1.24 per pound of uranium for converting the uranyl nitrate product of the Purex process to uranium hexafluoride by conventional methods, are $11,490,000 per year or $19.1 per gram of plutonium. Either of the volatility processes would thus be cheaper than the Purex process by approximately $2,231,000 per year, or $3.7 per gram of plutonium.

[1] E. L. Nicholson, *An Economic Study of the Chlorine Trifluoride Volatility Process for Recovery of Uranium and Plutonium from Irradiated Reactor Fuels*, ORNL-1786 (in preparation).

12. RADIOACTIVE WASTE STUDIES

Evaluation of Lined Earth Basins for Storing Radioactive Waste Solutions. The possibility of retaining radiochemical wastes in leaktight lined earth basins prompted an investigation of the various materials of construction that might be suitable as a lining material.[1] It is roughly estimated that such basins could be constructed at a cost of 13¢ per gallon of storage capacity, a figure that is approximately one-third the cost for carbon-steel storage tanks.

On the basis of preliminary laboratory tests, the use of asphaltic membranes (asphalt cement and/or prefabricated membranes) for lining earth basins to contain neutral or slightly caustic low-activity-level wastes appears to be practical. The recommended asphalt composition is Lion Oil Co. P_2O_5-blown membrane asphalt (softening point, 185 to 190°F). High-activity-level wastes, particularly acid wastes which would produce a basin temperature in excess of 150°F, cannot be contained by asphaltic materials. Neutralized or alkaline high-activity-level wastes can probably be contained by asphaltic materials if the basin temperature does not exceed 150 to 200°F. A recommended asphalt is Lion Oil Co. composition 15B44.

Membrane asphalts evolved hydrogen and became honeycombed when exposed to gamma radiation, although the channels appeared to be discontinuous. Exposures of up to 5×10^8 r produced no change in the ductility of the material, but the softening point increased 10 to 20°F. There was a general slight decrease in both the flash point and penetration, probably caused by a decrease in the oil and soft-resin fractions and an increase in the amount of hard resins and hexone-insoluble materials. This hardening effect appeared to be linear with the degree of exposure. The solubility of the asphalt in carbon tetrachloride remained the same. Fillers such as slate flour, rubber, aluminum powder, and mica did not decrease the radiation damage, but asphalt to which 20% Microwax had been added did not become honeycombed as a result of hydrogen evolution.

Changes in roofing asphalt as a result of irradiation were similar to those in membrane asphalts. Changes in physical properties of tars exposed to gamma radiation were similar to those that occurred in the asphalts, but there was no honeycombing. Hardening of asphalts and tars was far more severe from chemical exposure than from radiation exposure. Acid Hope-type wastes were destructive to asphalts and tars at 150°F or above. Alkaline Hope-type wastes appeared to be nondestructive in short tests (16 days) at 150 to 165°F. Both asphalts and tars were capable of enduring gamma radiation exposures of up to 5×10^8 r and temperatures up to 230°F simultaneously, but not in the presence of acid wastes.

The possibility of protecting asphalt or tar membranes from boiling (230°F) temperatures in the basin by a covering layer of compacted earth is impractical. Calculations made on the ORACLE have demonstrated that a temperature drop of only 0.5°F can be expected after a basin has arrived at steady-state condition. Rough calculations indicate steady state after a basin has been in operation for about 1½ years.

Molten Aluminum Nitrate Storage. The properties of molten aluminum nitrate were investigated to determine the feasibility of storing radioactive wastes, such as those from the 25 process, in this form. A significant reduction in the volume of stored waste would thus be possible. The hydrated salt $Al(NO_3)_3 \cdot 9H_2O$ melted at 73°C, but solidified again when the heating was continued to approximately 100°C. The solidification was probably the result of partial dehydration to a hydrate with a melting point above 100°C. The use of a reflux condenser to return the water evolved or the addition of small amounts of water maintained the salt in the molten state. When heated in an oven at 110°C, the salt decomposed, with a weight loss of 65%. This is more than would be lost in complete dehydration and is a further indication of the instability of the salt. Preliminary examination of specimens of stainless steel that had been exposed to molten aluminum nitrate but not defilmed showed that corrosion was 1.8 to 6.3 mils per year based on weight losses and that pitting was severe.

[1] *Chem. Tech. Semiann. Prog. Rep. March 31, 1954*, ORNL-1708, p 13.

13. ION-EXCHANGE TECHNOLOGY

The Higgins continuous ion-exchange contactor[1] is being investigated for use in recovering uranium directly from unfiltered sulfuric acid leach pulp slurries of the Western ore and the Chattanooga shale type. Uranium can probably be separated more economically by this method than by the filtration and precipitation steps now used. A 2-in.-dia Higgins column containing +20 mesh Dowex 1, an anion-exchange resin, has operated satisfactorily with a synthetic, bentonite, ore-leach slurry.

In preliminary runs with a 6-in.-dia contactor in which Permutit SK and water were used, solution distribution and resin movement were shown to be essentially the same as in the smaller models. Air inleakage hindered resin movement somewhat during the pulse cycle, and air bleeders are being designed for eliminating this difficulty. This contactor is 14 ft high and is designed to process, per 24-hr day, the unfiltered leach pulp from 2.5 to 3.0 tons of ore. The feed rate of the slurry to the column will be 280 gal/hr/ft^2. If the 6-in.-dia contactor operates satisfactorily with ore pulp, a 12-in.-dia unit will be built and used to demonstrate the utility of this equipment in field operations.

Tests were made to determine optimum operating conditions for the recovery of uranium from unfiltered sulfuric acid ore-leach slurries with the Higgins continuous ion-exchange contactor. Uranium was stripped more readily from the anion exchanger Permutit SK-1 (10 to 50 mesh) with 1 *M* ammonium nitrate than from other ion exchangers tested such as Dowex 1 and Amberlite IRA-400. The kinetic exchange characteristics of a resin varying in size from 10 to 50 mesh were superior to those of a uniform 20-mesh resin, a feature which overshadowed the disadvantage of the higher column-pressure drop imposed by the finer resin. Stripping of the uranium from the anion-exchange resin by conversion of the uranyl sulfate to uranyl chloride with 10 *M* hydrochloric acid followed by elution with water was highly efficient.

An ion-exchange method in which Amberlite IR-105 resin is used with 0.5 *M* ammonium carbonate as the eluant was developed for the preparation of rubidium chloride containing 99% RbCl, 0.1% CsCl, and less than 1% KCl from crude material containing approximately 80% RbCl, 19% CsCl, and 1% KCl. This purified rubidium salt was suitable for use in preparation of rubidium metal. The ammonium carbonate was easily removed from the product by heating it to form carbon dioxide and ammonia; these gases probably could be recombined for re-use in a cyclic process.

With Dowex 50 resin and ammonium carbonate as the eluant, a separation factor of 10 was demonstrated for the removal of cesium from the sodium hydroxide–sodium aluminate waste obtained in the caustic dissolution of uranium-aluminum alloy fuel elements. Cesium recovery was 99.9%.

[1] I. R. Higgins, *A Countercurrent Solid-Liquid Contactor for Continuous Ion Exchange*, ORNL-1310 (Sept. 19, 1952).

14. DISSOLUTION STUDIES

The dissolution-study program was initiated in order to develop a method for the continuous dissolution of uranium-aluminum alloy slugs to form satisfactory feed to the solvent-extraction process. The batch-dissolution procedures now in use require extensive equipment because of criticality factors, and the product cannot be used in solvent-extraction processes without adjustment.

Acid Dissolution. The program for the study of continuous acid dissolution has progressed from preliminary laboratory-scale experiments[1] to evalution tests on a column that is 5.5 in. in diameter and 10 ft high. As a result of the evaluation by the Physics Division[2] of the nuclear criticality conditions of a steam- or water-jacketed right-cylindrical continuous dissolver for 5.37% uranium–94.63% aluminum alloy, an outside diameter of 12 in. is considered to be the limiting dimension. This column was operated satisfactorily with the Hanford type (7.5% uranium) of cast slugs and the Savannah River type (5.37% uranium) of extruded slugs, both unjacketed and unirradiated. Feed that meets the flowsheet requirements of either the Idaho or the ORNL 25 processing plant was produced by varying the conditions. Full-scale slugs were randomly stacked in the dissolver, and more were periodically added to maintain the proper dissolution rate. The dissolvent (nitric acid, 0.005 *M* in mercuric nitrate) was trickled over the slugs.

The concentration of aluminum in the product decreased as the alloy dissolution rate increased (see Fig. 14.1). Dissolver product conforming to ORNL chemical processing plant specifications (1.8 *M* aluminum, 0.0 *N* HNO_3) was produced with the Hanford type of cast slugs at a dissolution rate

[1] *Chem. Tech. Prog. Rep. Aug. 1, 1951 to Feb. 10, 1952*, ORNL-1311, p 65.

[2] A. D. Callihan, personal communication.

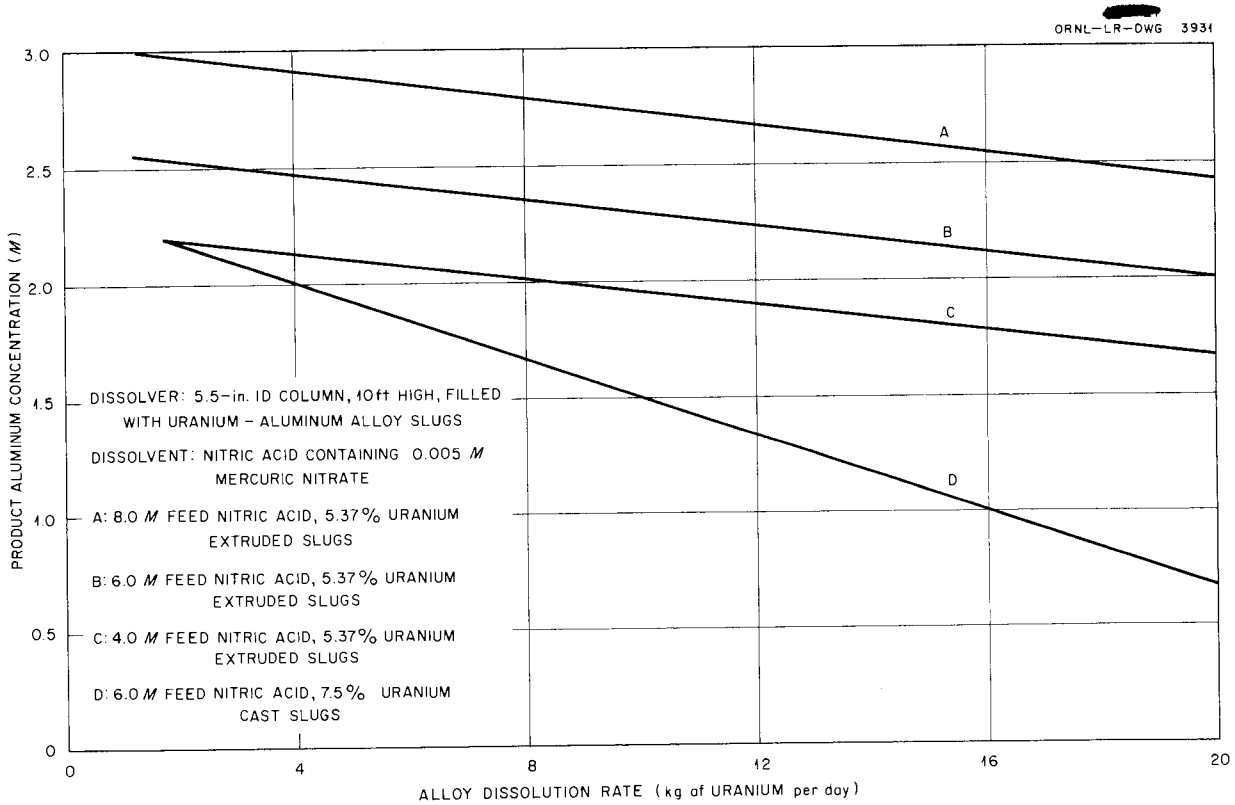

Fig. 14.1. Effect of Alloy Dissolution Rate on Product Aluminum Concentration in Continuous Dissolution of Uranium-Aluminum Alloy Slugs.

of 4 to 5 kg of uranium per day. Idaho chemical processing plant feed (1.2 *M* aluminum, 1.0 *N* HNO_3) was produced from the same slugs at a rate of 13 kg of uranium per day. The highest dissolving rate in the tests in which cast slugs were used was about 19 kg of uranium per day; however, this product did not meet either ORNL or Idaho solvent-extraction-process requirements. With the Savannah River type of extruded slugs, ORNL solvent-extraction plant feed was produced at a rate of 22 kg of uranium per day. The average acid consumption in all tests, with both types of slugs, was 3.65 moles per mole of alloy dissolved; the greatest deviation from this value in any one run was 0.65, and the average for all runs was 0.21 mole/mole.

When Savannah River slugs and acid were fed to the dissolver at constant rates and the packed height was allowed to seek its own level, packed heights of 4, 6, and 10 ft were found for dissolution rates of 5, 10, and 22 kg of uranium per day.

Although the mercury concentration of the dissolvent was 0.005 *M* in all runs, that of the condensate which returned to the dissolver varied from 0.005 to 0.01 *M*. When the condensate stream was discarded and a synthetic stream that was similar in all respects except for being mercury-free was introduced into the dissolver to replace it, the uranium dissolving rate decreased by approximately 20 to 30%.

The off-gas was removed from one of three positions – the top, the center, or the bottom of the dissolver. Flooding occurred at feed rates of approximately 0.5 and 2.5 liters/min with the outlets at the top and center, respectively. With the outlet at the bottom, flooding did not occur at feed rates up to 7.5 liters/min, but in this range the off-gas evolution rate was so high that considerable entrainment of product into the condenser resulted. It was important to eliminate condensation of acid in the off-gas line when the outlet was at the bottom of the dissolver, since this stream constituted an appreciable percentage of the feed acid that would otherwise be returned to the top of the dissolver.

Significant variation in product composition was found in a 40-hr test at steady state. The aluminum concentration of hourly samples of the product differed from the mean value by a maximum of 0.19 *M*, with an average variation of 0.06 *M*; the maximum acidity variation was 0.38 *N*, with an average of 0.08 *N*. A holdup tank would be required in plant operation so that a product of constant average composition could be obtained.

Further small-scale tests were made with a continuous dissolver whose reaction chamber was either 1 or 2 in. in inside diameter and either 6 or 24 in. in height. Both cast and extruded unirradiated slugs were used, 5.37% uranium–94.63% aluminum, 2.4 in. long and 0.20 in. in diameter. Feed acid concentrations were varied from 6.0 to 15.8 *M*. The maximum uranium concentration in the product occurred at a feed nitric acid concentration of 8.4 *M* for a fixed feed rate and height of the slug bed. For all nitric acid feed concentrations between 6 and 12 *M*, the column product was acid deficient to the extent of 2 to 3 *N* for slug-bed heights greater than 12 in. An acidic product can be obtained at slug-bed heights of 6 in. and a feed nitric acid concentration of 6.5 *M*. The rate of dissolution of extruded 5.37% uranium alloy was approximately 1.5 times greater than that of cast alloy. A similar difference in dissolution rate between cast and extruded uranium-aluminum alloy in mercury-containing nitric acid has been observed in batch dissolvings. In either case the dissolution rate was not a function of the uranium concentration of the alloy containing either 5.3 or 7.5% uranium.

Satisfactory steady-state operation was demonstrated; such may not be the case for large equipment in which a number of variables such as uniform heat dissipation, off-gas entrainment, and off-gas condensate return are not so easily controlled. For example, a variation in the amount of mercury condensed and returned would cause an erratic dissolving rate. It was therefore concluded that the acid continuous dissolver should be operated with excess slug surface area so that all the acid would be used. Thus the product composition would be constant (i.e., in a condition of maximum acid deficiency) for a given feed rate, and only the continuous addition of a constant amount of acid would be required to adjust the product to the desired composition. The total slug dissolution rate would be controlled by the rate of acid feed to the dissolver.

Caustic Dissolution. Caustic dissolution of uranium-aluminum alloy slugs is a more rapid process than the acid dissolution process now in use; therefore it can be carried out in a smaller dissolver. Under comparable laboratory conditions, with 6 *M* sodium hydroxide the continuous column dissolution rate for extruded slugs is approximately 1.7 times

that obtained with 6 *M* nitric acid. The solid uranium oxide ($UO_2 \cdot xH_2O$) product of the dissolution can be separated from the sodium aluminate solution and dissolved in acid to give a feed to the solvent-extraction process that is 20 times as concentrated as the product of acid dissolution. Use of this concentrated feed would increase the capacities of existing solvent-extraction plants correspondingly. The total volume of waste from the caustic-dissolution–solvent-extraction process would be roughly one-fourth the volume of waste obtained in the acid-dissolution–solvent-extraction process. In addition, all the wastes from the caustic process would be initially alkaline or would be made alkaline by the addition of caustic and could be stored in relatively inexpensive mild-steel tanks. Rough estimates indicate that, with a hypothetical plant processing 20 kg of U^{235} (5.37% uranium alloy) per day, waste-storage costs could be $1,000,000 per year less than the cost of storing in stainless steel tanks the acid wastes from the acidic-dissolution–solvent-extraction process. The chief disadvantages of caustic dissolution are the evolution of hydrogen in the dissolver off-gas, the necessity of separating the uranium oxide solids from the caustic aluminate solution, and the necessity of using critically safe equipment in the first cycle.

In preliminary experiments on continuous column dissolving, uranium-aluminum alloy slugs containing 5.37% uranium (Savannah River type, cast and extruded) or 7.5% uranium (Hanford type, cast) dissolved readily in boiling, aqueous, sodium hydroxide solutions when the dissolvent initially contained a twofold excess of sodium hydroxide. The products of the dissolution were solid $UO_2 \cdot xH_2O$ (where x equals approximately 3), UAl_3, and a solution of sodium hydroxide and sodium aluminate. In the laboratory experiments, both centrifugation and filtration were found to be satisfactory for separating the uranium oxide solids from the caustic sodium aluminate solution, and the uranium losses were less than 0.1%. It has been tentatively established that the sodium hydroxide–sodium aluminate solutions are stable enough (i.e., several weeks) for the separation to be performed when the $NaOH/NaAlO_2$ ratio is 1:1 or greater and the sodium hydroxide concentration of the product is at least 3 *M*.

In the presence of the radioactive fission products found in irradiated slugs, hydrogen peroxide would probably be formed in the dissolver. A sodium iodide concentration of 6×10^{-4} *M* in the boiling sodium hydroxide dissolver solution was found to inhibit the solubilizing reaction of hydrogen peroxide on the uranium solids. This inhibition was present up to instantaneous hydrogen peroxide concentrations that were at least 10 times as great as the largest concentration anticipated in an actual irradiated-slug dissolution.

Dissolutions in both batch- and trickle-type column-dissolver equipment showed that the caustic dissolution of uranium-aluminum alloy is kinetically of first order with respect to sodium hydroxide concentration and is independent of aluminum contration. The specific reaction rate is approximately 2.3×10^{-4} liter/min/cm^2 at approximately 104°C (the boiling point of the dissolver solution) for either cast or extruded alloy of 5.37 or 7.5% uranium. A distinct advantage is apparent over the acid systems, since the rate of nitric acid dissolution decreases markedly as the aluminum concentration in the product increases, and the rate for cast slugs is approximately 66% of that for extruded slugs.

Preliminary studies indicated that approximately 99.9% of the fission products except ruthenium, iodine, and cesium remain with the solids when the solid $UO_2 \cdot xH_2O$ is separated from the sodium hydroxide–sodium aluminate solution. Ruthenium and iodine are about evenly divided between the two phases, while cesium remains exclusively in the solution. Cesium can be separated from the waste solution by an ion-exchange procedure (see Sec. 13).

About 90% of the solids in the slurry obtained in batch dissolution of uranium-aluminum alloy slugs had a particle size less than 0.1 μ, and the slurry had a viscosity of approximately 12 centipoises at 20°C and approximately 3.5 centipoises at 70°C. The particles tend to agglomerate and trap hydrogen bubbles. In preliminary tests with a 12-in.-dia solid-bowl centrifuge at 2200 *g*, separation of the uranium solids from the dissolved aluminum was shown to be physically feasible.

A preliminary detailed report on caustic dissolution is being prepared.[3]

[3] R. G. Wymer, *Caustic Dissolution: Preliminary Studies*, ORNL-1782 (in preparation).

15. HETEROGENEOUS REACTOR FUEL REPROCESSING

A process for dejacketing the stainless-steel-clad uranium dioxide fuel plates that are to be used in the proposed 10-Mw package reactor was discussed earlier.[1] The process consists in introducing carbon into the stainless steel by heating the jacketed fuel plate in a hydrocarbon atmosphere at 1000°C for 1 to 2 hr. The carburized steel jacket dissolves readily in copper sulfate solution, leaving the core; the loss of uranium from the core to the solution is 0.03%. In the process metallic copper is deposited. The copper sulfate solution is poured off, and the solid UO_2 core is dissolved in 12 *M* nitric acid to form a feed to a solvent-extraction process. This procedure appears to be superior to simple dissolution of the fuel element in concentrated sulfuric acid because it is less corrosive and results in a volume of waste in the subsequent solvent-extraction cycle that is one-sixth that from the sulfuric acid dissolution.

Further studies showed that the chemical reactivity of the steel increases as the carbon content is increased to about 2%; above 2% the reactivity remains constant. This reactivity depends somewhat on the condition of the surface. If the stainless steel is entirely covered by deposits of carbon and carbides, the surface is inert and the dissolving solution cannot make contact with the chemically reactive metal. The surface of the carburized stainless steel may be decarburized so that the character of the surface reverts to that of the original stainless steel and becomes inert. Hydrogen or moisture at elevated temperature can produce decarburization.

The maximum dissolution rate of carburized stainless steel, as well as of ordinary iron, occurred with a 0.07 *M* copper sulfate solution. Below 0.07 *M* the specific dissolution rate was proportional to the concentration; above it the specific rate diminishes with increasing concentration. The maximum rate of dissolution would permit the cladding of the UO_2 element to be penetrated in about 3 hr. In practice, a uniform dissolution rate would be obtained by continuously adding concentrated copper sulfate solution to the dissolver containing the carburized fuel element submerged in water. The rate of addition would not exceed the rate of stainless steel dissolution.

Synthetic feed solutions for solvent-extraction processing were prepared by dissolving copper and uranium in nitric acid in the presence of a fission-product spike and traces of iron sulfate and nickel sulfate. During the reaction, elemental sulfur formed in the flask, but it caused no difficulties in the first countercurrent extraction. It was found that a small amount of an unidentified activity from the spike was volatilized during dissolution and condensed in the off-gas lines.

One countercurrent solvent-extraction cycle of this synthetic feed with a 6% TBP solvent gave beta and gamma decontamination factors of 1×10^5 and 5×10^4, respectively. These factors are 10 times as high as those expected in one cycle and may be the result of the use of 0.1 *M* urea in the feed solution. The urea destroys the lower oxides of nitrogen; thus it probably decreases the extractability of ruthenium.

The reaction of nitrogen oxides with urea was studied by observing the color change of the solution when ferrous ion was present. The green-brown color of the nitroso-ferrous complex in nitric acid disappeared as the ferrous ion was oxidized to ferric, but the rate of disappearance was much slower when urea was present.

Qualitative experiments were conducted to determine the feasibility of dissolving stainless steel directly into nitric acid by electrolysis. Stainless steel anodes dissolved in 15.8 *M* nitric acid electrolyte, with no gas evolution at the anode. High current densities, that is, 0.5 amp/cm^2, were used. At high nitric acid concentrations the cathodic decomposition of the nitric acid takes place at the cathode (a stainless steel cathode was used in the experiments).

The volatility method of processing heterogeneous reactor fuels is discussed in Sec. 11.

[1] *Chem. Tech. Semiann. Prog. Rep. March 31, 1954*, ORNL-1708, p 10.

16. CRITICALITY STUDIES

A general criticality study on cylinders and infinite slabs was made for aqueous solutions of enriched U^{235}. The effort was devoted primarily to a review of a previous study[1] of criticality and to the extension of the data into a somewhat more useful engineering form. A series of curves which permit rapid determination of criticality conditions for various cylinder dimensions and concentrations of aqueous U^{235} was prepared. A nomograph was prepared from which, given one set of critical dimensions for any ratio of hydrogen to U^{235}, it is possible to determine any other pair of critical cylinder dimensions and critical sphere and cube dimensions for the particular ratio of hydrogen to U^{235}.

[1]C. K. Beck *et al.*, *Critical Mass Studies Part III*, K-343 (April 19, 1949).

17. CHEMICAL ENGINEERING RESEARCH

Hydraulic-Ram-Controlled Ion-Exchange Column. Experimental studies were carried out on a hydraulic-ram-controlled ion-exchange column (see Fig. 17.1) in which continuous countercurrent flow of the resin and liquid phases was maintained. This column differed from the Higgins column now being studied for use in ore processing (see Sec. 13) in that in the Higgins column there are periodic, instantaneous interruptions of the resin movement in order to transfer loaded resin from the sorption section of the equipment to the elution section. An ion-exchange column in which the resin movement is not intermittent would probably be simpler and less expensive to construct and more efficient in operation, have lower maintenance costs and yield a more uniform product.

In the hydraulic-ram contactor, the resin flows downward and the liquid flows upward. Fluidization of the resin bed is prevented by a hydraulic ram. In earlier designs, in which the hydraulic ram was not used, the production rate of the column was limited by the critical velocity of the liquid used for fluidizing the bed.

In demonstration runs with a 4-in.-dia hydraulic-ram-controlled column, operation was smooth under dense-bed conditions when velocities up to about three times the fluidizing velocity were used. The column consisted of a 3-ft isolated section at the bottom, a 2-ft countercurrent exchange section, a 2-ft isolated section, and finally a 3-ft hydraulic-ram section at the top. There was a jet at the bottom to recycle resin to the top of the column. In order to pump water out of the bottom of the ram and return it to the top of the column, a pump was connected to the column through a 40 mesh screen. The column is also provided with a water-feed line at the bottom of the exchange section and a product-withdrawal pump at the top of the exchange section. The purpose of the isolated sections in the column is to keep the sorption and elution sections of the column separate. In these sections the manometric pressure differential can be maintained at zero; thus it is ensured that there is no significant flow of fluid in these sections.

The test runs were made with 20 mesh Dowex 50 and Dowex 1 resins and water. The fluidizing velocity in the exchange section was 61 gal/ft^2/hr; the resin downflow rate was 86 ft^3/ft^2/hr.

The coefficients of friction were calculated to be between 0.1975 and 0.281. The difference was within experimental accuracy. These studies were made with Dowex 1 and a $\frac{5}{8}$-in.-o.d. metal tube sealed at one end, under operating conditions.

Venturi Contactors. The use of venturi contactors for contacting the organic and aqueous phases in solvent-extraction processing was shown to be feasible. In one pass through a single $\frac{1}{2}$-in. Schutte-Koerting water jet, approximately 98% of the uranium was stripped by water from a 4.5% tributyl phosphate solution containing 2 g of uranium per liter. In a second pass, the over-all stripping was increased to 99.8%, approximately that accomplished by contacting the organic and aqueous phases in 12 ft of pulsed column. The

[redacted]

combined flow through the jet was 6 liters/min, equal to the flow through a 5-in.-dia pulse column. The organic phase was the pumped liquid, and the inlet pressure was 5 psig. The organic-to-aqueous flow ratio was 2.7:1.

In tests with the classic hexone–acetic acid–water system, as much acetic acid was extracted from the water by the hexone in a single pass through the jet as was extracted in a single batch-countercurrent stage.

[redacted]
ORNL-LR-DWG 3932

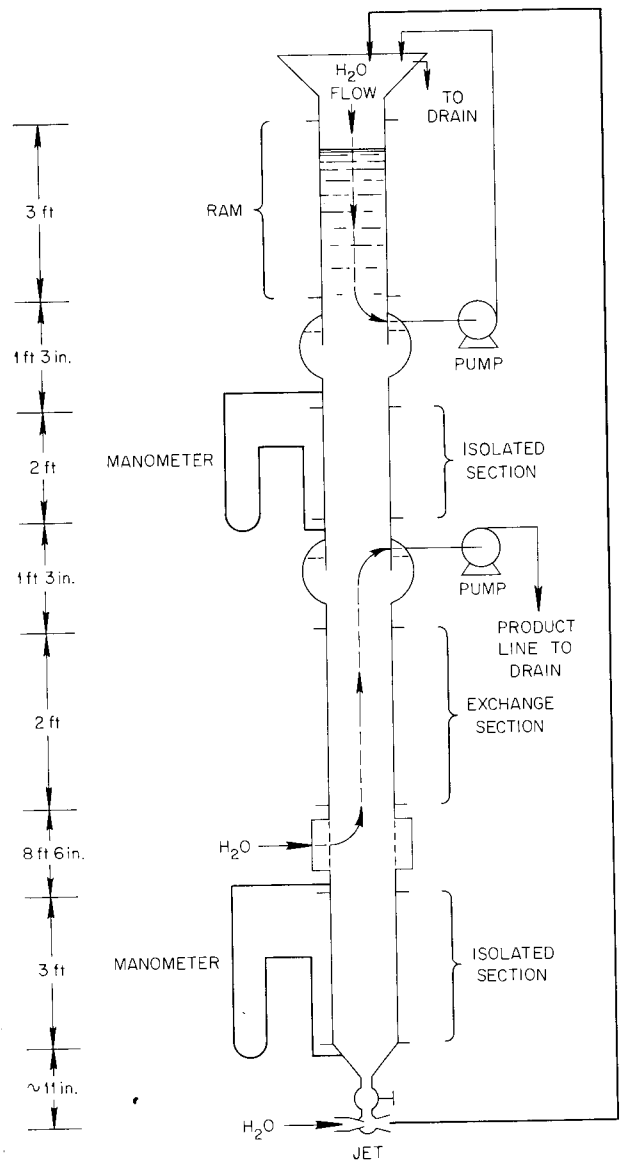

Fig. 17.1. Hydraulic-Ram-Controlled Ion-Exchange Column.

[redacted]