[redacted]

ORNL
MASTER COPY

ORNL
Central Files Number
54-8-234

OAK RIDGE SCHOOL OF REACTOR TECHNOLOGY

Summary of High Temperature, Liquid Metal, Fused Salt Pump Development work in the ORNL-ANP Project for the Period July 1950 – January 1954

DECLASSIFIED

Per Letter Instructions Of
List 11-4-57
D. McGhee
For: N. T. Bray, Supervisor
Laboratory Records Dept.
ORNL

OAK RIDGE NATIONAL LABORATORY
OPERATED BY
CARBIDE AND CARBON CHEMICALS COMPANY
A DIVISION OF UNION CARBIDE AND CARBON CORPORATION
UCC
POST OFFICE BOX P
OAK RIDGE, TENNESSEE

[redacted]

[redacted]

[redacted]

[redacted]

ORNL
CENTRAL FILES NUMBER
54-8-234

OAK RIDGE SCHOOL OF REACTOR TECHNOLOGY
F. C. VonderLage, Director

This document consists of 96 pages
No. 56 of 77 copies, Series A

Summary of High Temperature, Liquid Metal, Fused Salt Pump Development Work in the ORNL-ANP Project For the Period July 1950 - Jan. 1954

Data Compiled By
Edsel S. Farris

August 1954

[redacted]

[redacted]

Distribution:

1. C. E. Larson
2. T. A. Swarthout
3. C. E. Winters
4. H. F. Oppendiek
5. R. M. Wood
6. R. S. Livingston
7. A. M. Weinberg
8. E. P. Blizard
9. P. C. Zmola
10. D. K. Holmes
11. J. R. Johnson
12. E. R. Mann
13. R. E. Briggs
14. R. A. Chappie
15. L. G. Alexander
16. F. C. VonderLage
17. R. V. Meghreblian
18. J. H. Marable
19. M. Rosenthal
20. T. Beesee
21. R. M. Bate
22. R. F. Boneyou
23. L. R. Dresner
24. N. F. Dessing
25. R. K. Osborn
26. A. P. Fraas
27. J. F. Bailey
28. W. G. Cobb
29. J. A. Conlin
30. W. T. Burgerson
31. H. C. Gray
32. A. G. Grindell
33. J. F. Hains
34. W. R. Huntley
35. E. M. Lees
36. W. Bowen
37. R. B. MacPherson
38. D. W. Magnuson
39. L. A. Mann
40. W. B. McDonald
41. D. F. Salmon
42. G. Samuels
43. H. W. Savage
44. A. W. Savolainen
45. W. L. Scott
46. P. G. Smith
47. A. L. Southern
48. J. M. Trummel
49. W. C. Trowbell
50. D. R. Weir
51. G. D. Whitman
52. G. F. Wislicenus
53. E. S. Farris (Boeing)
54-55. General Research Library
56-66. Laboratory Records
67-77. ORSORT Files

PREFACE

The people involved in the development of elevated temperature pumps have reviewed this work and wish to express their thanks to the author for presenting an authoritative history of this development.

Faults and defects are visible in some of the conclusions and premises written into previous quarterly progress reports when reread in the light of the present day art of elevated temperature pumping and liquid metal handling. For this reason it is recommended that information regarding specific pump designs or applications be sought from members of ORNL Aircraft Reactor Engineering Division, Experimental Engineering.

H. W. Savage
ANP Division

ACKNOWLEDGEMENT

The author wishes to express his appreciation and thanks to the various people who assisted in the preparation of this Summary Report.

The idea for such a report was provided by A. P. Fraas and special thanks is extended to him.

The paper is based on the work of the experimental engineers of the ARED-Experimental Engineering group and particular appreciation is accorded this group and H. W. Savage, head of the unit. Special information and details not included in the ANP Quarterlies were provided by: W. R. Huntley, A. G. Grindell, W. G. Cobb, W. B. McDonald, and D. F. Salmon, and sincere thanks is extended to them for their assistance.

Additions and corrections were made to the rough draft of the report by H. W. Savage, W. G. Cobb, W. B. McDonald and W. C. Tunnel and their assistance is sincerely appreciated.

FOREWORD

The report is based primarily on the information contained in the ANP Quarterly Reports under Experimental Engineering - Pump Development for the period, July 1950 - Jan. 1954. Anyone concerned with high temperature pumps would find it necessary to thumb through some 14 reports, each covering a short period of the testing accomplished. It was therefore felt that a summary combining together in one report all of the information available on high temperature pumps would be, in particular, an informative project to the author, and in general, a useful report to the atomic energy industry as a whole.

As the data was being compiled it became clear that in many respects the development work was more of an applied seal development than a specific pump program. For that reason the report is subdivided under the various type seals considered.

Frozen seals of various kinds were tried and for many commercial applications would have been perfectly satisfactory. For application in a system such as the ARE where high mechanical reliability over extended periods of operation without maintenance is required, the frozen seal pump is questionable. A gas-sealed pump that fulfils the requirements of the ARE system was developed and is expected to be entirely adequate.

In some areas of the technological field, theories may be reduced to a series of formulae and numbers, in others, results are obtained primarily from the pragmatic approach. In the pump development work covered in this report, it is the latter approach which has proven successful.

TABLE OF CONTENTS

	Page
Distribution	2
Preface	3
Acknowledgement	4
Foreword	5
Table of Contents	6
List of Figures	8
I. Gas Sealed Pumps	10
A. Liquid Metal Pump	11
B. Centrifugal Pump For Figure 8 Loops - Model "LB"	15
C. Laboratory-Size Pump With Gas Seal - Model "LF"	20
D. ARE Centrifugal Pump - Model "D"	24
E. ARE Centrifugal Pump - Model "DA"	26
F. Allis Chalmers Pump	30
G. ARE Centrifugal Pumps	31
1. Model "DAB" (Developmental)	
2. Model "DAC" (Fuel)	
3. Model "DANA" (Moderator Coolant)	
H. Gas-Sealed Pump For In-Pile Loop Test - Model "LFA"	41
II. Frozen Sealed Pumps	43
A. Frozen Sodium Seal	44
1. Modified Worthington	44
2. ARE Size Centrifugal Pumps	48
a. Model "FP"	
b. Model "FNAB"	

TABLE OF CONTENTS (Con't.)

	Page
B. Frozen Fluoride Seal	55
1. ARE Size Centrifugal Pump - Model "F"	55
2. Modified Durco	55
3. ARE Size Pump - Model "FF"	59
C. Frozen Lead Seal	61
1. Modified Durco - Model "FPB"	61
III. Combination Packed-Frozen Sealed Pumps	64
A. Modified Durco Pumps	65
1. Model "LG"	
2. Model "LH"	
3. Model "LHA"	
4. Model "FCH"	73
IV. Stuffing Box Type Packed Seal Pump	77
A. Eastern Industries Coolant Pump	78
V. Centrifugal Sealed Pump	79
VI. Canned Rotor Pumps	83
A. 1 1/2 HP Pump	84
B. Allis-Chalmers Pump	87
VII. Electromagnetic Pumps	89
A. G.E. Pumps	
B. Two-Stage E.M. Pump	
VIII. Bibliography	96

LIST OF FIGURES

Fig.No.	Title	Page
1.	Layout and Details - Liquid Metal Pump	12
2.	Centrifugal Pump for Figure 8 Loops - Model "LB"	16
3.	Modification To Pump Model "LB"	17
4.	Laboratory-Size Pump with Gas Seal - Model "LF"	22
5.	ARE Centrifugal Pump - Model "D"	25
6.	Water-Test Performance of ARE - Model "DA" Pump	28
7.	ARE Pump Model "DA"	29
7A.	Fountain Flow of the Model "DAB" Pump	32
8.	ARE Size Sump Type of Pump Model "DAB"	35
9.	ARE Coolant Pump Performance - Model "DANA"	38
10.	ARE Fuel Pump Performance - Model "DAC"	39
11.	ARE Fuel Pump - Model "DAC"	40
12.	Vertical Shaft Sump Pump - Model "LFA"	42
13.	Modified Worthington Pump - Frozen Seal	46
14.	Performance of Modified Worthington Pump	47
15.	ARE Size Pump - Model "FP"	51
16.	ARE Size Pump - Model "FNAB"	53
17.	ARE Size Pump - Model "F"	56
18.	Durco Pump Modified Frozen Seal	57
18A.	Modified Seal Section Used on the Model "FF" Pump	60
19.	ARE Size Pump - Model "FPB"	62
20.	Centrifugal Pump - Model "LG"	66
21.	Performance of Modified Durco Pump	67
22.	Centrifugal Pump - Model "LH"	70

LIST OF FIGURES (Con't)

Fig. No.	Title	Page
23.	Centrifugal Pump - Model "LHA"	71
24.	ARE Size Pump - Model "FCH"	74
25.	Centrifugal Seal Pump	81
26.	Schematic Canned Rotor Pump	85
27.	Performance Data on the Allis-Chalmers Canned Rotor Pump	88
28.	Comparison of General Electric and ANP Electromagnetic Pump Data	92
29.	Schematic of Two-Stage Electromagnetic Pump	93
30.	Performance Curves for Double-Stage Electromagnetic Pump with NaK	95

I. GAS SEALED PUMPS

A. Stainless Steel Acid Pump Reworked to Test Special Features for Operation With Liquid Metals

In July, 1950, it was proposed that a stainless steel acid pump available in Y-12 surplus stores be reworked to permit operation with liquid sodium at temperatures to 1200°F. The modified features to be incorporated were: (1) special impeller design to permit operation with a gas rather than a liquid seal without going to either large amounts of impeller overhang or a bearing operating in the fluid being pumped, and (2) combined use of oil cooling at the bearings and a hollow shaft to maintain moderate bearing and seal temperatures with impeller temperatures as high as 1200°F, even with relatively little impeller overhang.

Fig. 1 shows the basic pump proportions. The impeller used is shrouded with backward-sweeping vanes, annular ring type labyrinth seals between both front and rear impeller faces and the housing, and a thick rear face containing radially drilled holes. The latter serve to draw off liquid leaking toward the hub through the labyrinth seal on the rear face and at the same time serve to centrifuge out gas bubbles entrained in the liquid metal coming from the labyrinth seal. This arrangement permits operation with a gas rather than a liquid metal in contact with the seal.

The impeller is over-hung with the bearings well away from the volute case. Oil-cooled fins on the impeller shaft between the bearings serve to keep the bearings and seal cool. The shaft between the impeller and the seal is hollow to make it a rather effective heat dam. It is estimated that the seal temperature can be kept to 450°F and the bearing temperature to 250°F in this pump when handling liquid sodium at 1200°F.

[redacted]

DRAWING CSK 14133

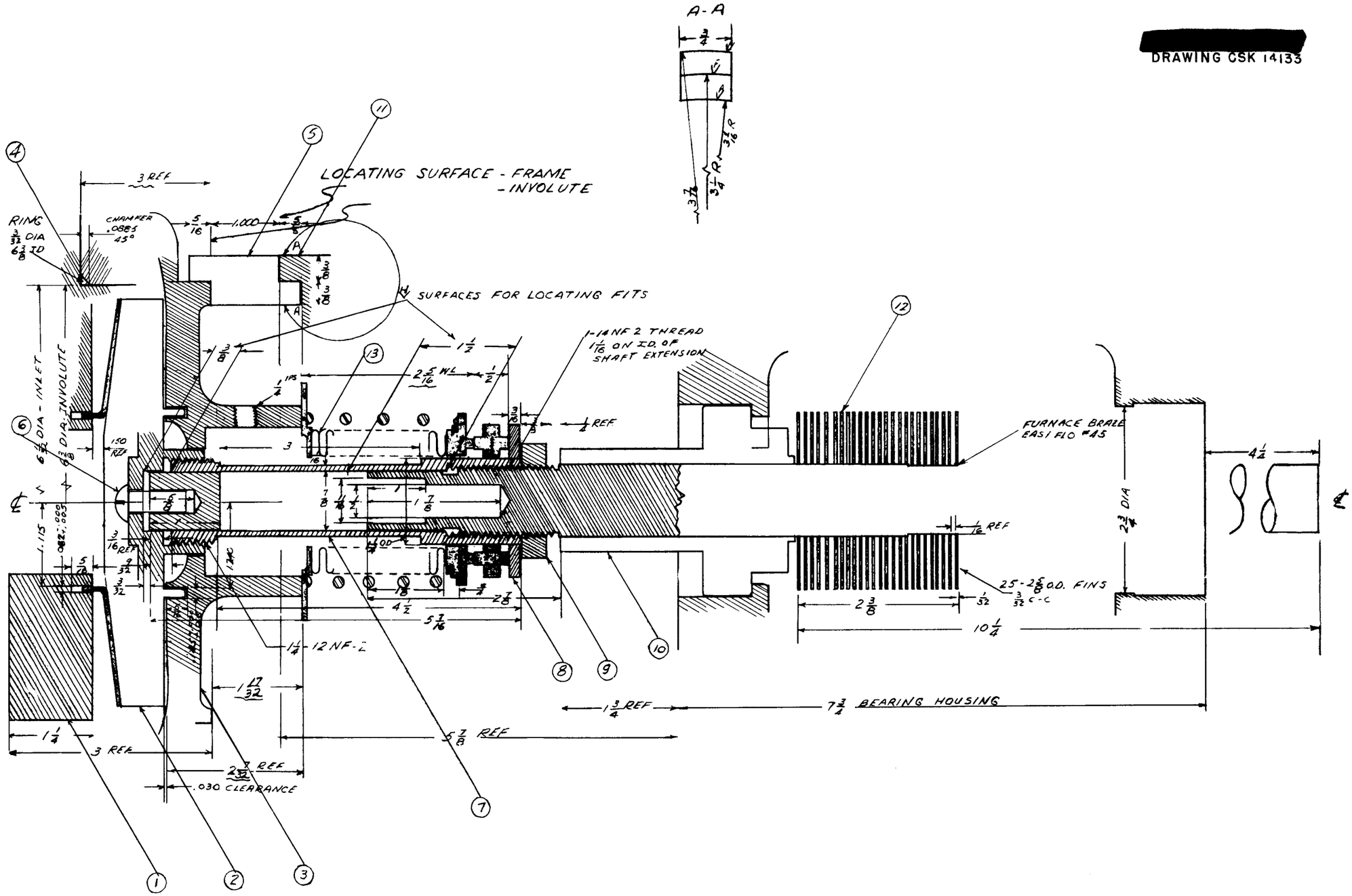

Fig. 1. Layout and Details - Liquid Metal Pump

The coolant expansion tank is placed on a level with the pump so that the liquid level will fall between the impeller and the seal irrespective of whether the pump is stopped or running.

The pump was tested with water at room temperature and performed satisfactorily. It was demonstrated that the pump could operate over a wide range completely free of both aeration of the water and presence of water at the seal. The desirable range of operation falls between 10 gpm, 19 psi head and 55 gpm, 13 psi at 1800 rpm. At 1800 rpm and flow rates lower than 10 gpm a considerable amount of liquid is churned and splashed about in the cavity between the seal and the impeller. On the other hand, at flows of more than 60 gpm aeration of the water occurred. These bounds on the desirable operating range could be moved toward higher or lower flows by reducing or increasing the number of radial passages provided in the rear face of the impeller to draw off the liquid passing through the labyrinth toward the hub.

Some difficulty was encountered in getting seal materials. In an effort to save time, the seal washer was made of grey iron while the surfaces rubbing against it were of 347 stainless steel. They were lubricated with a small amount of "liqui-moly" (MoS_2 in suspension). The rubbing surfaces were lapped on an ordinary lapping plate, hence were very much rougher than is ordinarily specified for seals of this type.

The liqui-moly lubricated grey iron washer satisfactorily completed 8 hr of endurance at 1800 rpm pumping water at room temperature. A thermocouple showed that its operating temperature was running about 90°C. A few drops of oil were then allowed to fall on the seal. Intense bubbling occurred where the oil contacted the seal washer (which was coated with a

film of liqui-moly). The seal temperature began to rise immediately and the seal began to chatter so badly that the pump had to be stopped about 15 min after the oiling operation. The rubbing surfaces of both the stainless steel and the cast iron were lightly but quite generally scored.

The seal surfaces were refinished and the cast iron was replaced with a graphite seal washer. The pump was then operated for 80 hr in sodium at temperatures up to 1000°F. The test with sodium was discontinued when finely divided sodium was found in the silicone oil circulated over the outer side of the bellows seal. Since only gas should have been in contact with the inner side of the seals, and since the liquid level control had given difficulty with sticking of a solenoid valve, the rig was disassembled for inspection. All parts were found in good condition except the bellows which was found to have two axial cracks on the periphery of two convolutions.

No further tests were conducted with this pump but some of the ideas tested were incorporated in later test pumps.

Ref. 15 and Ref. 3, p. 21.

B. Centrifugal Pump for Figure-8 Loops - Model "LB"

A vertical-shaft sump-type down-flow centrifugal pump was designed and fabricated for use in the figure-8 loops (Fig. 2). This assembly utilizes a packed gas seal with liquid-level maintenance by automatic control of gas feed. Solenoid valves operated by a system of probes regulate the gas feed. The shaft is cooled internally by a coolant such as kerosene circulated through the squirt tube and hollow shaft arrangement. The seal housing is also cooled by circulation of the coolant through the passages around it. Make up gas to provide for the seal leakage is fed into the labyrinth below the seal in order that the gas leaking through the seal will carry a minimum of sodium vapor. The use of a cooled mechanical seal was contemplated, and a means for its insertion with comparative ease was provided for.

The pump was tested initially with water. It was found that air was being drawn into the impeller by the vortex around the shaft. The difficulty was eliminated by placing over the impeller suction an inverted pan into which the inlet tube discharged its liquid (Fig. 3). A short thimble was welded in for passage of the shaft with a diametral clearance of 1/16 inch. Air was prevented from being drawn in by the pump suction as long as the top face of the thimble around the shaft remained submerged. The shaft packing box as originally designed with depth for only two rings of 1/8 - in.-square packing was considered to be unsafe for operation on high temperature sodium. A new packing box assembly which allows four rings of 1/4-in.-square Teflon packing with five washers of 1/16-in.-thick Teflon sheet was fabricated for initial operation with sodium. This packing was

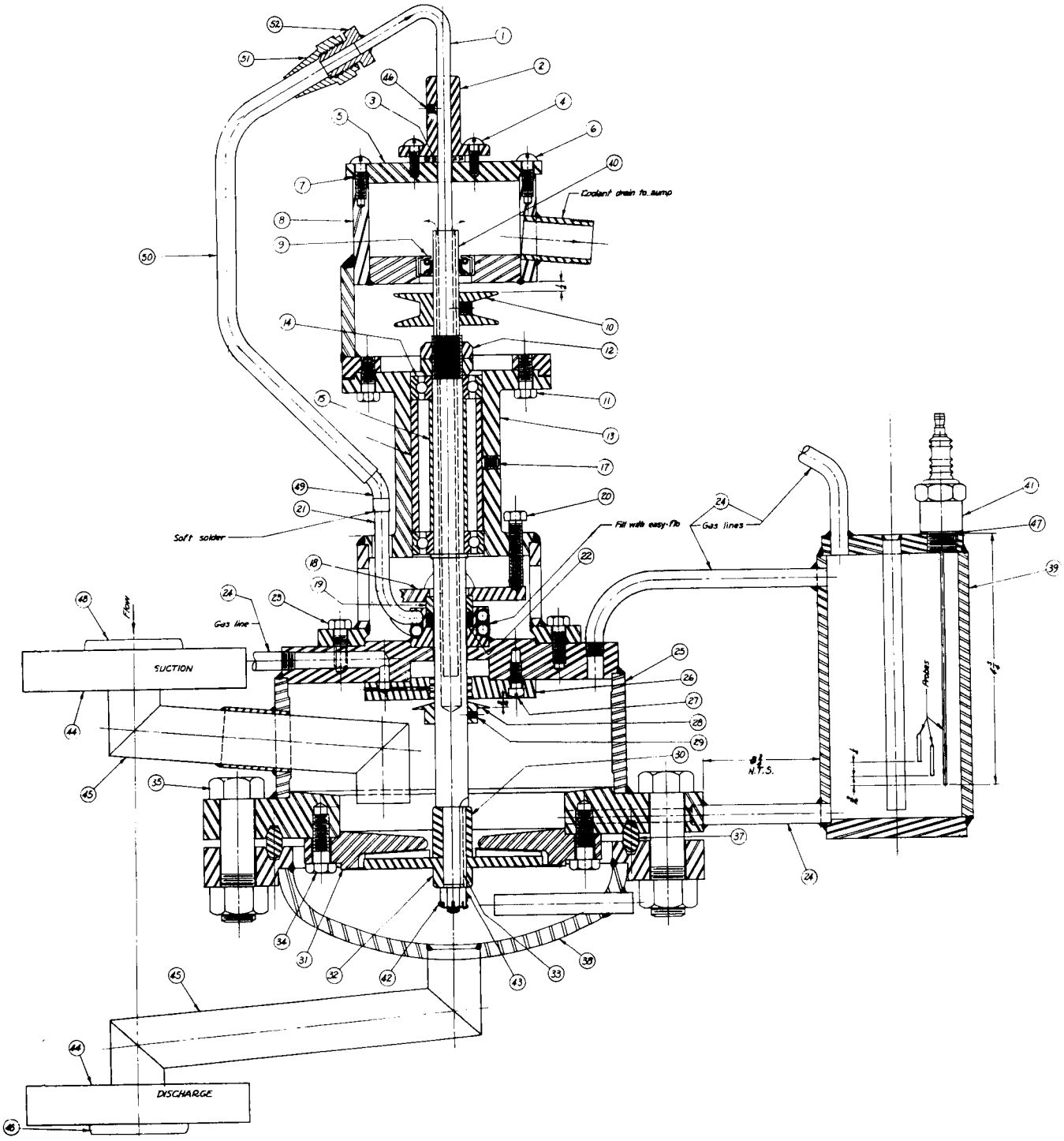

Fig. 2. Centrifugal Pump for Figure-8 Loops Model "LB"

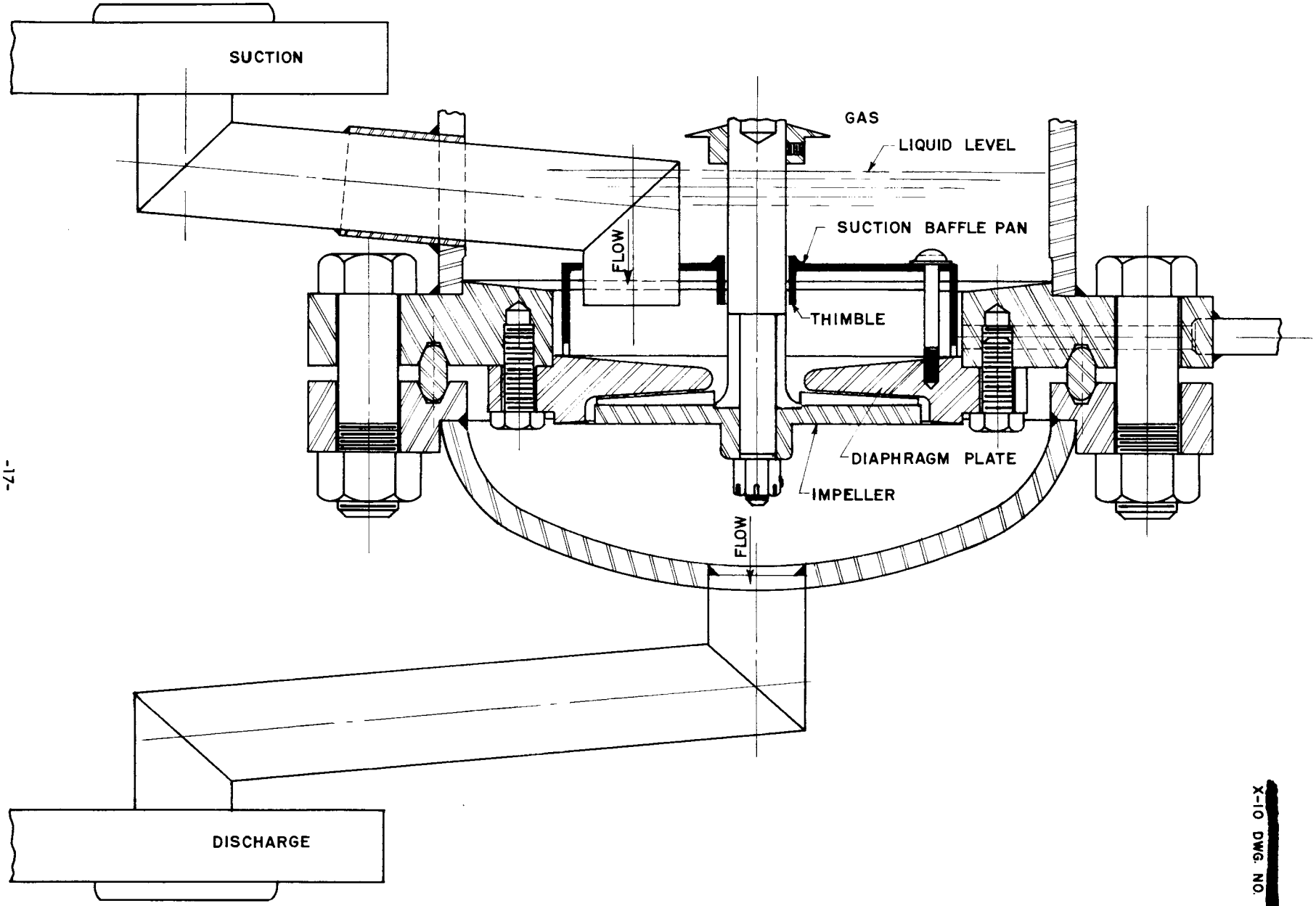

Fig. 3. Modification to Pump Model "LB"

X-10 DWG. NO. 11501

cooled internally and externally. Level indication and control were taken from the liquid surface in a tank mounted at the side of the pump housing.

The pump was operated in a Figure-eight loop with sodium. Flow was 7.5 gpm at approximately 45 ft head. The difficulties of simultaneously controlling the three (surge tank, pump tank and sump tank) liquid levels in the system under dynamic conditions inhibited smooth operation. The first run lasted for 3 1/2 hr at a sodium temperature of 795°F before failure of the shaft seal. The second run lasted 16 hr, reaching a temperature of 900°F, but was terminated when the pump became starved.

Both runs failed prematurely because of an inadequate liquid level control system. In the first run the liquid pressure equalizer line between the pump and level control tank became plugged, allowing sodium to rise through the seal. This was corrected by additional heaters and insulation on both the liquid and gas lines between the pump and level control tank. The intermittent pumping in the second test arose from failure of the level indication and control equipment to maintain a satisfactory liquid level in the pump. The difficulties encountered in maintaining constant liquid level in the surge tank and in the pump indicated that this method of control was impractical.

It was decided that level control could be accomplished by means of electrical probes and gas pressure directly in the pump body. With this modification the pump was operated with NaK as the pumped fluid. In the first test pumping was continuous for 12 hr and the NaK temperature reached 820°F before a leak in a welded joint necessitated a shutdown. The second test was for 12 hr, and a NaK temperature of 940°F was attained. Excessive gas leakage through the shaft packing and the gasketed joint under the stuffing box necessitated termination of the test.

The pump and system were cleaned, reassembled, and provided with heaters and insulation to allow preheating to approximately 1000°F. The system was then filled with the eutectic LiF-KF-NaF (Flinak). The pump was operated for 35 hr with flow at 6 gpm and temperatures up to 1300°F. A leak in the loop system caused the test to be discontinued. Gas leakage through the shaft seal was negligible throughout the run and smooth operation was obtained with a gas-held level control. It was concluded that Teflon packing in contact with liquid metal vapors (Na and NaK) was not a compatible combination. It appears that the fluoride vapors do not attack Teflon in as severe a manner.

The leak was repaired and the pump was operated in an isothermal loop for 500 hr with fluorides at temperatures up to 1300°F. Shutdowns occurred due to leaks in the plumbing system but no indication of failure was encountered in the pump itself.

The pump was also operated for approximately 76 hr at 1500°F. It was found during this period of testing that the flanged and gasketed joint must not be covered with insulation. When this does happen severe warpage of the flange occurs and it is impossible to maintain a leak tight joint.

The seal was then modified to incorporate a Graphitar, rotary face seal and is discussed under the heading, "Laboratory-Size-Pump with Gas Seal - Model 'LF'."

Ref. 1, p. 254; Ref. 2, p. 168; Ref. 3, p. 16; Ref. 4, p. 41; and Ref. 5, p. 27.

C. Laboratory-Size Pump with Gas Seal - Model "LF"

The laboratory size pump, Model "LB", was redesigned to incorporate a Graphitar, rotary face seal in place of the graphite-impregnated-asbestos stuffing box seal, and the parting faces of the pump casing were moved to a point above the liquid level in the pump, to make assembly and servicing easier(Fig. 4). Thus the parting face seal is now a helium seal. Oil is used to cool the drilled shaft and to flood the rotary gas seal assembly both for cooling and for lubrication.

The pump was operated in a fluoride loop for over 250 hr delivering 10 gpm, 1200°F fluid at a head of 16 feet. Shaft speed was 2500 rpm. Some operational difficulties were experienced during the course of the run. True liquid level indication was not possible with the spark-plug probes due to rather violent turbulence at the liquid surface. For this reason shaft speed was limited to 2500 to 3000 rpm. Oil leakage occurred coming from the bearing housing past the carbon-ring face seal and/or the "O" ring oil seal into the oil catch basin immediately below. This basin is continuously drained and no oil is permitted to drain into the fluoride system. However, it will not keep the fluorides from becoming contaminated by oil vapors. It was later found that cooling the catch basin would prevent oil vapor contamination of the fluorides.

A modification was made in the pump bowl to reduce the turbulence at the liquid surface. This consisted simply of additional baffling in the pump suction bowl.

The test was continued and the pump operated for over 1000 hr satisfactorily. Fluorides were pumped at temperatures up to 1500°F with the average temperature for the entire test around 1350°F. The additional

baffles performed satisfactorily and liquid level could be obtained up to shaft speeds of 4400 rpm.

The rotary gas seal, Graphitar No. 30, lubricated with spindle oil, running against hardened tool steel, functioned with extremely small gas leakage and without maintenance or appreciable wear during the total running time. Oil leakage past the seal assembly was collected and it was found to amount to less than 1 cm^3 per 24 hr period.

The only mechanical failures in this pump were broken guide vanes in the discharge case. These vanes were originally held in place by small tack welds.

The guide vanes were reinforced and welded back into position. Additional tack welds were added to the other vanes. The pump was placed back in the fluoride loop and operated for 996 hr with the fuel temperature at 1500°F. The pump was run at 3600 rpm and produced a 50-psi head at 8 to 10 gpm. The test was terminated again due to a broken guide vane in the discharge bowl. This failure occurred not at the weld but in the parent metal. The reliability of this assembly was then greatly increased by employing thicker vanes and adding a reinforcing ring around the top edge of the six vanes.

When the gas volume above the pump was vented into a sight glass, the discharged helium was heavily laden with oil vapor. Contamination of the fluorides with oil vapor was considered undesirable and a means of eliminating this phenomenon was required.

A modification was made in an attempt to eliminate the oil leakage past the rotary gas seal. The shaft and the stationary seal ring were water cooled by using a closed system in place of the open oil system used previously. The rotary face seal could be lubricated, if necessary, by adding

UNCLASSIFIED
PHOTO 22760

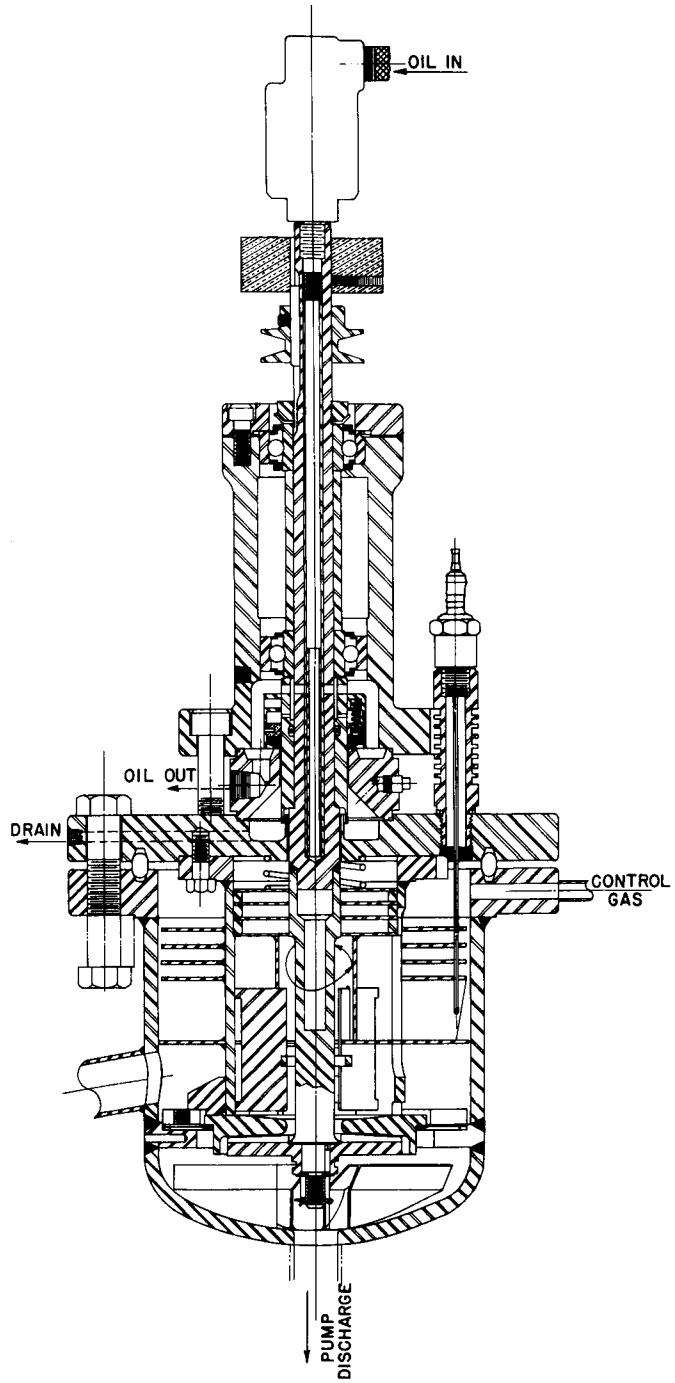

FIGURE 4. LABORATORY SIZE PUMP WITH GAS SEAL - MODEL "LF"

small amounts of oil, as liquid or mist, through an opening in the bearing housing.

The rotary, Graphitar No. 30, gas sealing ring was replaced with a silver-impregnated graphite (Morganite MYIF) ring, and an attempt was made to run the dry seal against hardened tool steel. However, at a bearing pressure of approximately 60 psi, this combination would not run unlubricated. It was necessary to add small amounts of oil to reduce gas leakage and to prevent small power excursions in the pump power.

This pump operated for 1000 hr with fluoride temperatures from 1200 to 1500°F. Shaft speeds up to 3600 rpm were used with a flow rate of 5 gpm that produced a 55 psi head. Suction pressure varied from 10 to 30 psi. There was regular dropwise oil lubrication at a rate of 60 to 8 drops per 25 hr at first, but later, lubrication was used only when power fluctuations occurred in the recorded power.

Gas leakage during the test was negligible up to 24 hr prior to termination of the test, when a marked increase was noted. The graphite seal piece was found to be pitted and scored. The stationary tool steel face had a wear depression.

Seal lubrication as originally used in combination with the cooled oil catch basin developed for the LFA pump provided good operation without oil vapor contamination of the system.

Ref. 5, p. 27; Ref. 7, p. 16; Ref. 8, p. 19 and 20; Ref. 9, p. 19 and 20; and Ref. 10, p. 17.

D. ARE Centrifugal Pump - Model "D"

Though detail design was made of this pump, it was never fabricated. See the discussion of the ARE Model "DA" for design details, also Fig. 5.

[redacted]
PHOTO 22757

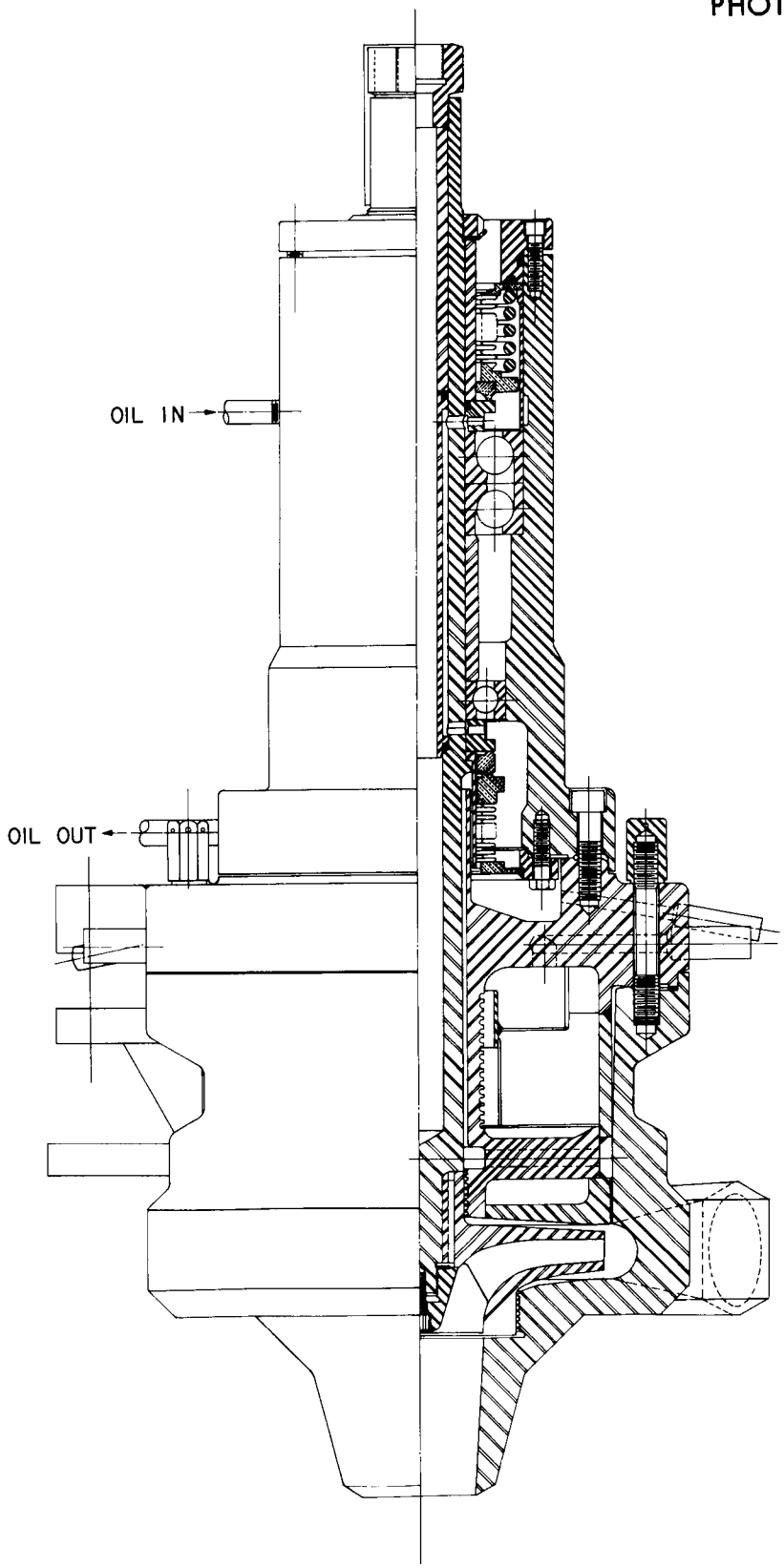

FIGURE 5. ARE CENTRIFUGAL PUMP MODEL "D"
(THIS PUMP WAS NEVER FABRICATED)

E. ARE Centrifugal Pump Model "DA"

The ARE fluid circuit at first consisted of two pumps in the circulating fuel system and two pumps in the moderator coolant system. The heat and flow requirements for each of these pumps were at one time considered identical; 45 gpm and 45 ft head. Later considerations showed the necessity of considerably higher flows required for the coolant pump but design at first was based on the above performance.

To avoid the necessity of simultaneously developing a satisfactory pump and a level control device, the pumps were located in the fluid circuit on the same level as the expansion tanks. The liquid level is then determined by the level in the expansion tank. Sufficient shaft overhang was incorporated to compensate for level variations occurring in the surge tank. A gas seal of graphite against a flat sealing face was incorporated in the design, and temperature control of bolted joints and pump body above the casing was effected by circulating gas. Provisions for internal cooling of the shaft by circulating liquid were also included. All bearings are external to the gas space above the coolant being pumped, and a circulated lubricant serves the bearings as well as the graphite seal. All parts except the impeller are of fabricated and machined construction. Impellers of cast 316 stainless steel were prepared by the Worthington Corporation.

The pump was hydraulically tested in a closed loop with water as the circulating fluid. The pump was not an entity in its own being but required, for successful operation, a combination surge tank, degassed, and pump fluid level control at the pump discharge. The tank carried full flow and in addition was connected to the pump with liquid and gas equalizer lines. The

liquid connection led from the bottom of the surge tank, entered the pump above the impeller housing and fed a narrow, annular volume surrounding the shaft to form a liquid seal for the impeller shaft. The gas equalizer interconnected the two gas volumes in the pump and surge tank. See Fig. 7 and, for a similar pump, Fig. 5.

Successful pumping was obtained only when the gas equalizer line was closed. With the interconnecting line open as designed, the pump lost its prime. With the gas equlizer closed, but with the liquid equalizer either open or closed, satisfactory pump performance was obtained. See Fig. 6.

Satisfactory indicated liquid level was obtained by maintaining independent gas-pressures on the pump and surge tank through a wide range of flows. However, small, rapid, pressure perturbations in the system communicable to the pump would cause the liquid level to rise or fall unduly in the shaft annulus without these changes being indicated on a pump-level sight gauge. Thus over-filling of the pump body or gassing of the liquid being pumped could occur. Either phenomenon would result in flow stoppage.

It is believed that perturbations of this type could be rendered harmless by some combination of stationary vanes in part of the annulus, by increased flow (or decreased head loss) from the surge tank through the liquid equalizer line, or by packing dampers in the annulus, but considerable development work would be required.

Since the requirements of the ARE are high mechanical certainty of operation and in view of the apparent progress at that time on packed seals, further development on the Model "DA" pump was temporarily discontinued.

Ref. 4, p. 41; Ref. 5, p. 27, 28; Ref. 7, p. 17

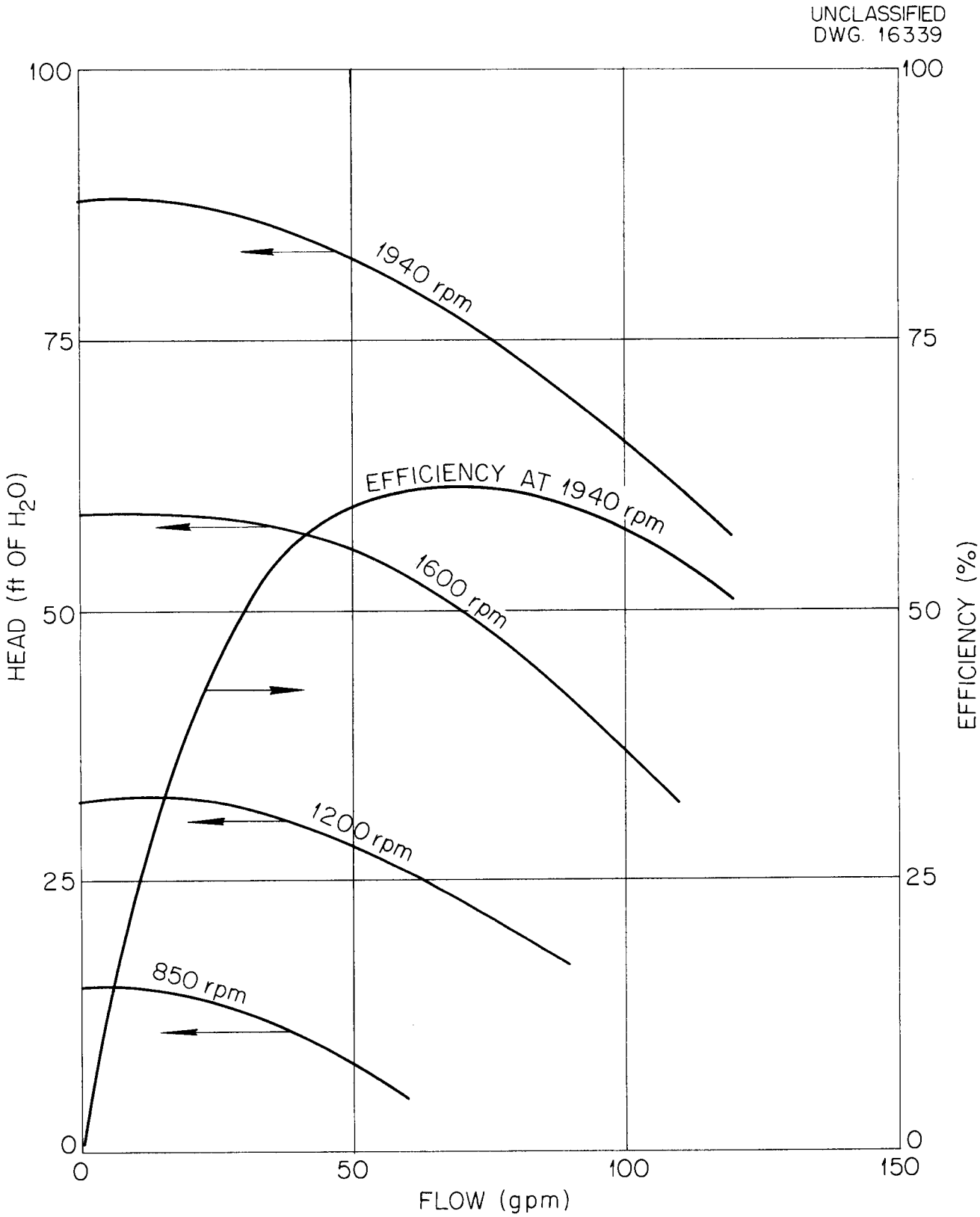

Fig. 6. Water-Test Performance of ARE Model "DA" Pump

[redacted]
PHOTO 22749

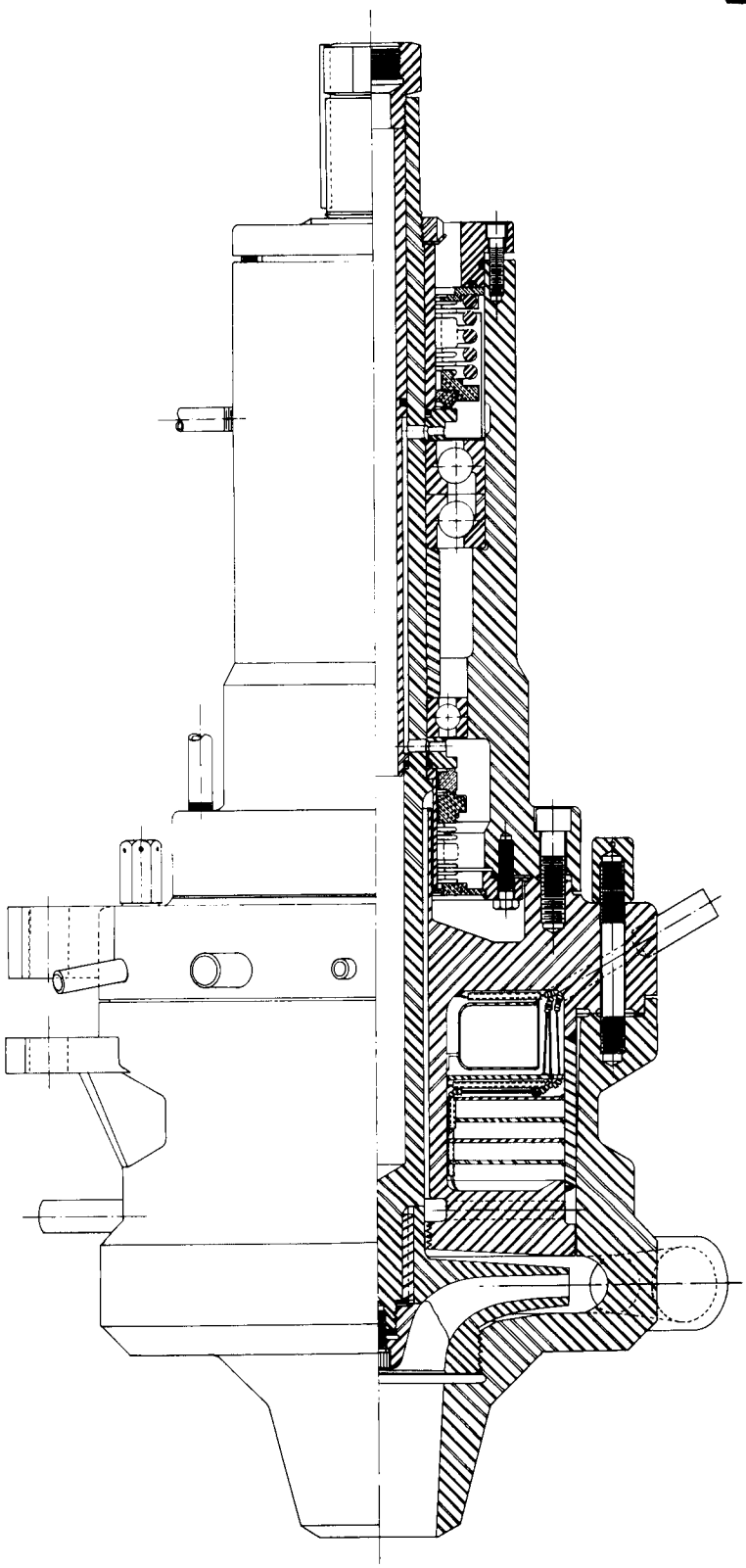

FIGURE 7. ARE CENTRIFUGAL PUMP - MODEL "DA"

F. Allis-Chalmers Centrifugal Pump

A centrifugal pump, obtained from Allis-Chalmers, was tested pumping NaK. When first tested, the shaft gas seal provided by Allis-Chalmers was used. The seal consisted of three Graphitar rings, each of which had three 120-deg segments. The room temperature diametral clearance between shaft seal rings was designed to be between 0.0065 and 0.0080 in. At operating conditions (approximately 170 gpm, 45 ft head, and elevated temperature), the diametral clearance and the gas leakage to atmosphere past these rings were to approach zero.

In the first test, the gas leakage past the seal was excessive; also a large amount of gas was entrained in the system fluid. Two modifications were made to the pump: a rotary face seal was added to decrease gas leakage to atmosphere, and additional baffling was placed in the region above the pump impeller to reduce gas entrainment in system fluid by eliminating vortexing above the impeller.

The second test revealed that the additional baffling did materially reduce gas entrainment in the system fluid and also that the rotary face seal reduced gas leakage to a tolerable level. The unlubricated rotary face seal, however, squealed and chattered after a very short period of operation. Further testing indicated that the seal operating temperature was sensitive to changes in pump suction pressure, a condition that may be overcome by using a balanced bellows seal. These tests indicate that this pump will give satisfactory performance when a good gas seal is incorporated in the design. Since development work was already underway on a gas sealed pump no further effort was expended on this pump.

Ref. 8, p. 18-19.

G. ARE Centrifugal Pump - Model "DAB", Model "DANA", Model "DAC".

The model "DA" pump was modified to convert it to a sump pump with a labyrinth seal from which leakage would return by gravity to the pump's sump tank. This pump requires a vertical shaft to maintain a liquid gas interface, and only a gas seal is necessary. The sump tank for the pump suction bell serves as an expansion and degassing tank for the system fluid. The gas seal consists of a Graphitar ring rotating against a stationary hardened-tool-steel surface. The gas-seal wear faces are maintained at a low temperature during operation by circulating coolant in three different regions at or near the seal.

The operation of the labyrinth seal (0.009-in. radial clearance) was investigated by measuring the leakage of the seal at various pump speeds and heads. The fountain increases with increase in pump speed and in pump head. However, the amount of the by-pass fountain flow is a reasonable fraction of the output, as shown in Fig. 7A.

The pump was tested in two types of sump tank with water at room temperature. The first tank was a rectangular, plexiglas box, 14 by 16 by 30 in., in which the fluid inlet to the tank was considerably offset from the eye of the impeller. The second tank was a plexiglas cylinder, about 12 in. in diameter and 14 in. high, in which the fluid inlet was below and directly into the eye of the impeller. When continuously submerged, even if only to a small fraction of an inch, the pump inlet suction bell appeared to function satisfactorily in either sump tank under all conditions of pump speed and flow.

ORNL-LR-DWG: 4814 [redacted]

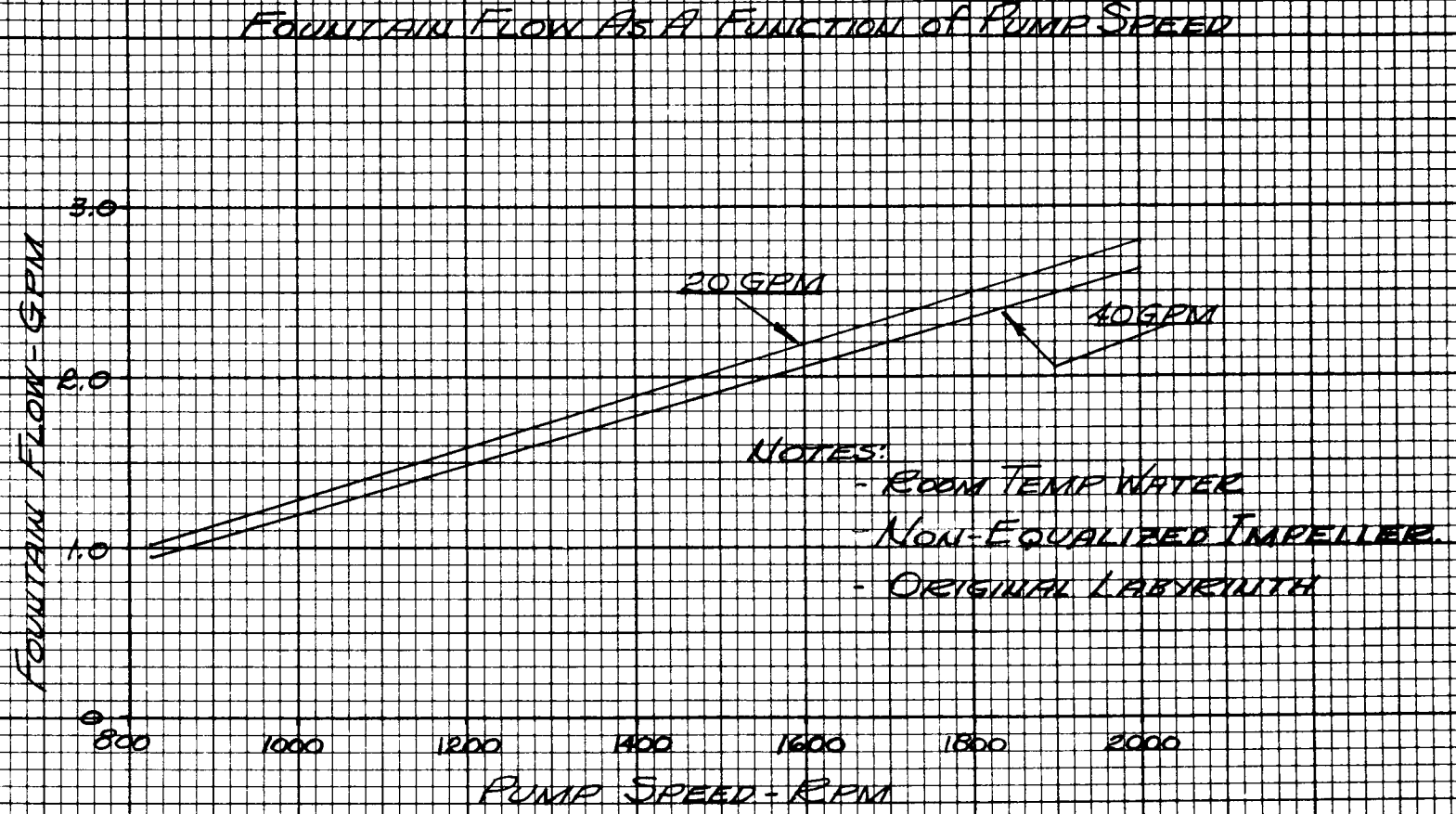

FIG 7A - FOUNTAIN FLOW OF THE MODEL "DAB" PUMP

Pump priming was not difficult to accomplish in either tank whenever fluid covered the impeller. In the initial test set-up, the volume of gas in the system piping at start-up was approximately equal to the volume of liquid, and in the cylindrical tank, the prime was broken by a sudden surge of gas into the impeller eye. Placing an obstruction over the fluid inlet to divert most of the gas bubbles away from the eye to the free surface was sufficient to maintain the prime.

Tests were made in which the fluid was gassed by admitting air, helium, or argon into the eye of the suction bell until the fluid became milky. The time required for the fluid to become relatively clear was then noted. In all tests, including tests with flow rates of up to 100 gpm and tests in which the cylindrical tank without baffles was used, the fluid degassed in less than 5 min of operation. When the inlet of the cylindrical tank was offset about 1/2 in. with respect to the eye of the impeller, the entire hold-up volume of liquid in the tank was given a rotary motion that increased in velocity at high impeller speeds and low flow rates. When the baffles were in place, this circular motion occasionally caused the formation of vortices and gas entrainment in the liquid. Without baffles in the cylindrical tank, the rotary motion was present but no vortices were observed.

This pump carries the Model designation "DAB". See Fig. 8.

The pump operated in a fluoride loop for 564 hours at temperatures between 1450 and 1500°F. Pump operation during this testing period was suspended on three occasions. However, inspection of the hardened-tool-steel vs. silver-impregnated graphite gas seal, after each of the three interruptions, revealed good sealing surfaces. A dry, hot, shakedown run was terminated when noise indicated that the shaft was rubbing against a stationary surface. The pump was reworked so that the clearance between the labyrinth seal and

[redacted]
PHOTO 22756

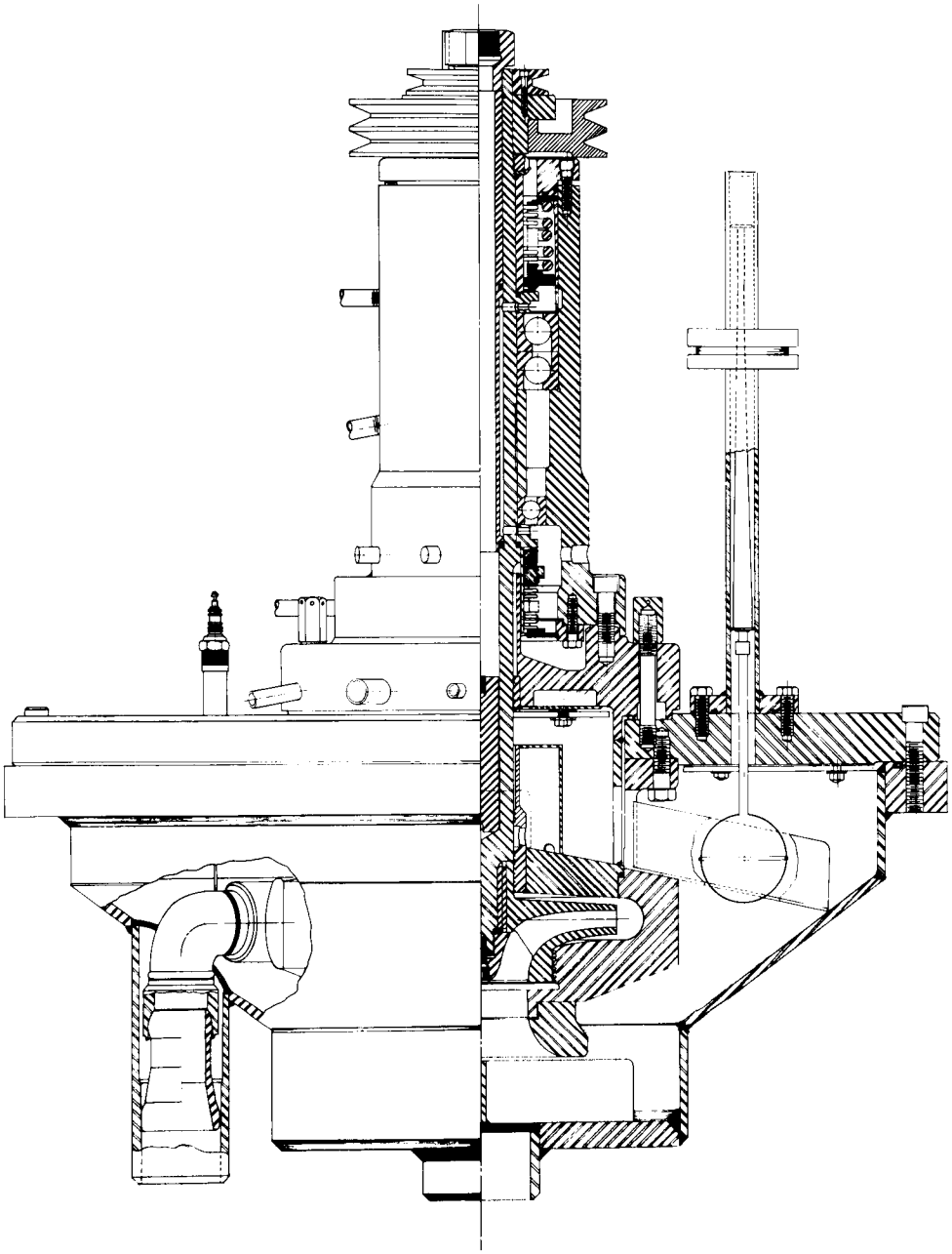

FIGURE 8. ARE SIZE SUMP TYPE PUMP
(CENTRIFUGAL PUMP MODEL "DAB"-EXPERIMENTAL)

the shaft was increased from approximately 0.009 in. on the diameter to approximately 0.040 in.

The second interruption, after a high-temperature test with the fluoride fuel, was to permit investigation of power pulses of 200 to 400 watts superimposed on the normal power curve. No evidence of metal scoring was found; however, frozen fluorides were found clinging to heat radiation shielding just above the labyrinth. This layer of frozen fluorides was pressing against the shaft in brake fashion over an arc of about 120 degrees. The presence of the fluorides in this region was due to accidental overfilling of the surge tank.

The third interruption was for an investigation of bearing housing noise. The noise was caused by slippage of the inner bearing race on the shaft. The bearing race and the shaft were altered to give a 0.0002 to 0.0004 in. interference fit between them in an attempt to eliminate the slippage.

The level of the fluid in the pump tank was raised and lowered to simulate ARE operation. The pump primed immediately with the impeller submerged. With pumping flow established the liquid level was lowered to 1 in. below the inlet eye of the impeller (which level also provided 1-in. submergence of the inlet to the suction bell), and satisfactory behavior of the pump was noted, that is, steady power, and no evidence of entrainment of gases.

The pump was subjected to many stop- and-start tests with the fluoride in the system; 13 of the tests were logged. Most of the tests logged were made to verify a minimum priming level located approximately one-half the way up on the inlet edges of the impeller vanes. The pump primed successfully at this minimum priming level for all tests in which the shaft speed

was 300 rpm or greater. The slower the speed, the greater was the time required to obtain definite priming, that is, resumption of substantially the head and flow for the test shaft speed. During these tests the power trace gave evidence of nearly complete degassing of system fluid in less than 10 minutes.

The pump was tested using sodium as the working fluid. The test was terminated after more than 300 hr of operation at 1200°F because a gasket leak at the parting face of the pump casing allowed sodium to jet against the top flange near the primary gas seal. No further bearing trouble was experienced during the tests, and post-run examination revealed no bearing or shaft wear. It is therefore concluded that altering the interference fit between the bearing and the shaft did successfully eliminate the slippage that occurred in previous tests.

Post-run examination showed that sodium vapor had no deleterious effect on the silver-impregnated graphite seal material. To confirm this, silver impregnated graphite was immersed in sodium at 300°F for 150 hr in a laboratory test, and again no harmful effects could be observed.

During the pump test, it was found that gas entrainment during pump start-up could be rejected in a satisfactory period of time.

The pump performance, both output and mechanically, was considered to be of sufficient reliability that it would be incorporated in the ARE system. The pumps for the two systems, moderator coolant and fuel, will be identical except for a difference in area of the volute discharge and the volumes of the sump tanks, since the fuel pump sump tank must provide volume for the addition of fuel as well as for the thermal expansion of the fuel. The operating characteristics were determined using water and are shown in Figs. 9 and 10. The pump model designation for the fuel pump is "DAC", See Fig. 11, and for the sodium system is "DANA".

ORNL-IR-DWG: 4815 [redacted]

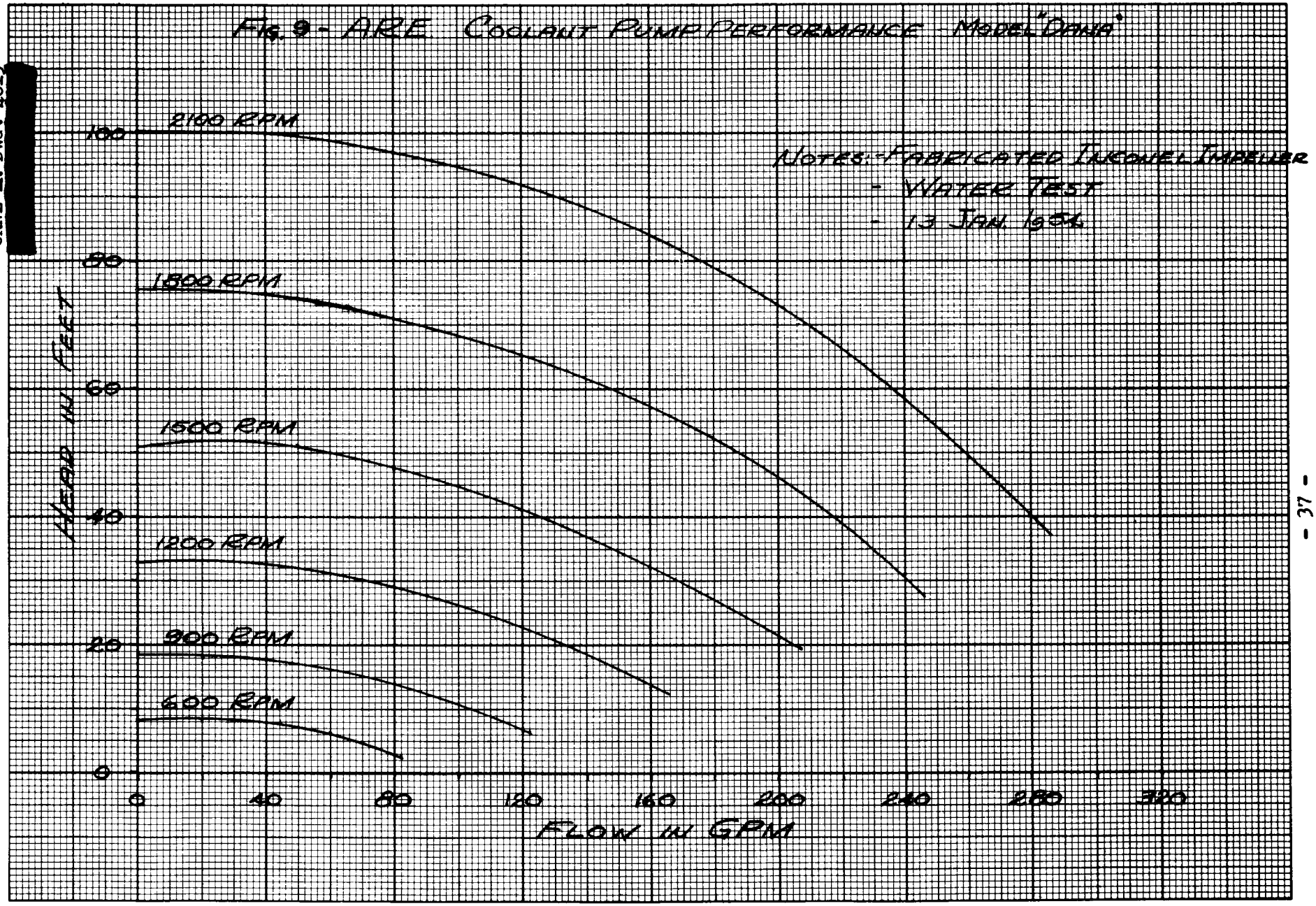

ORNL-LR-DWG: 4816 [redacted]

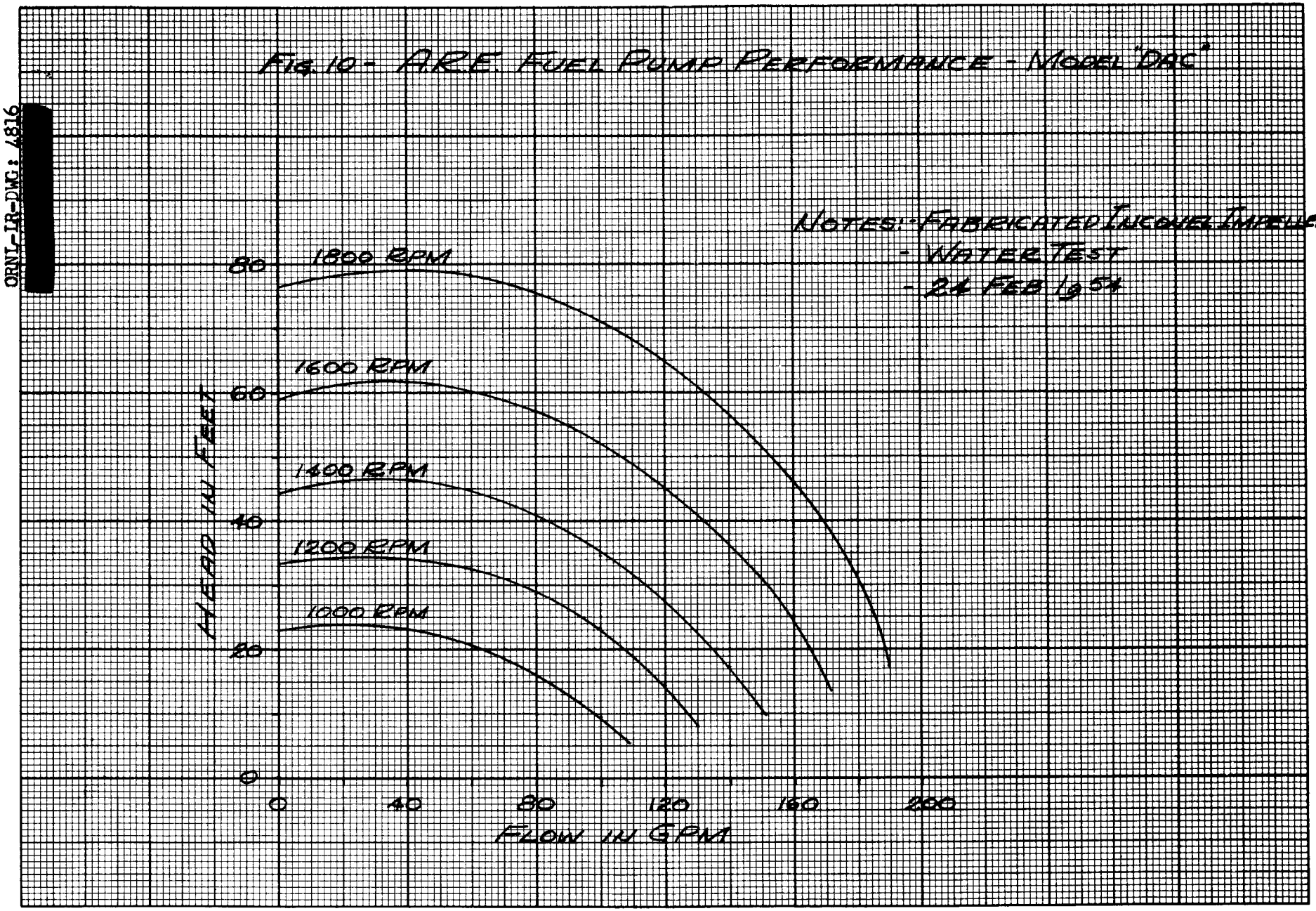

[redacted]
PHOTO 22761

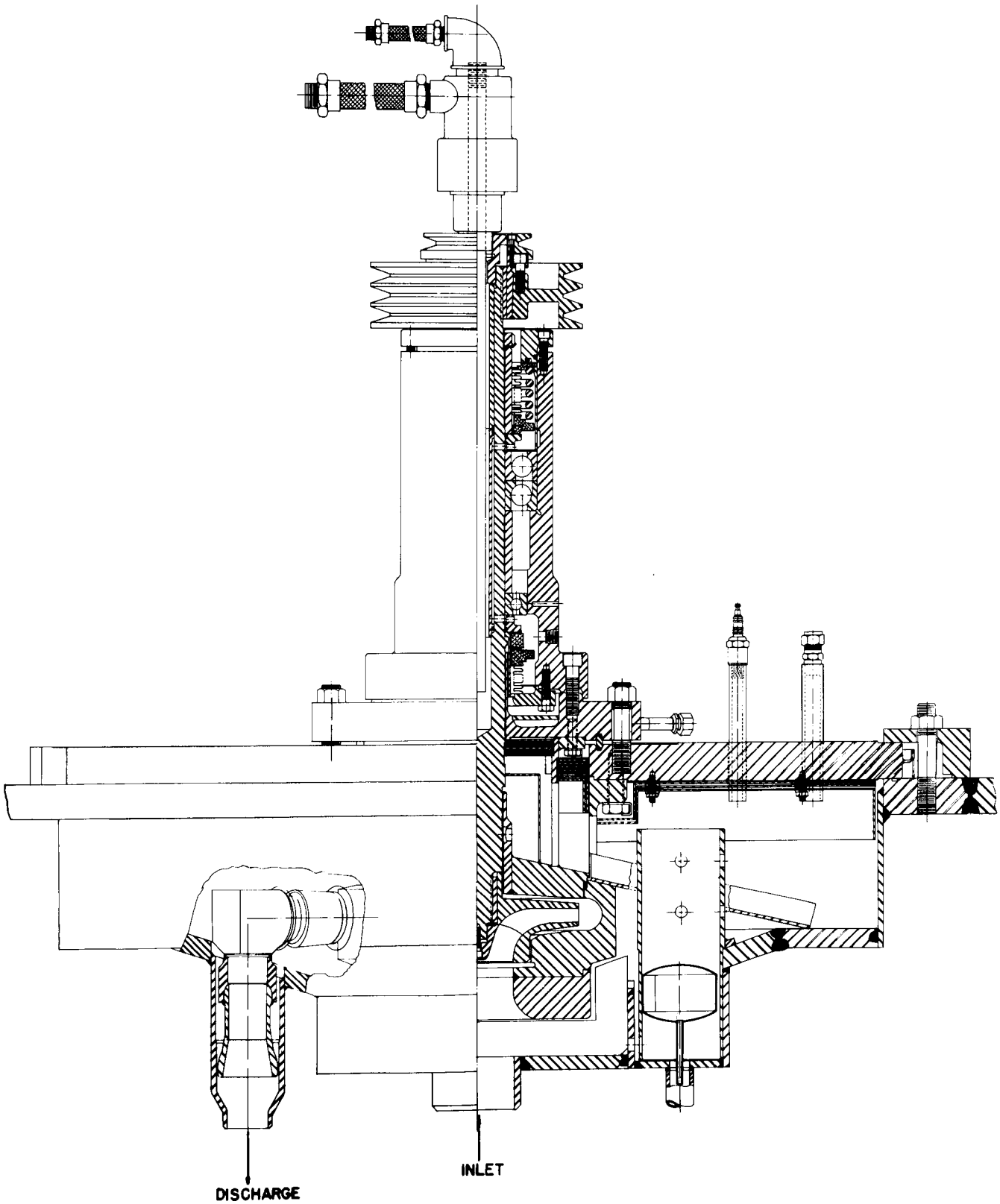

FIGURE 11. ARE FUEL PUMP- MODEL "DAC"

Pump Auxiliaries

The auxiliary systems for the ARE pumps are (1) a system for circulating light spindle oil as shaft coolant and seal lubricant, and (2) a supply of cooling water which acts as a heat barrier between the sump tank liquid and the gas seal. With the prototype sodium pump operating at 1500°F, heat loads of 11,000 Btu/hr in the water from the seal cavity cooling annulus and 7000 Btu/hr in the light spindle oil used as shaft and bearing lubricant were found. This heat was removed by water in external heat exchangers.

The tests conducted with the prototype pump to determine heat loads of the shaft- and seal-cooling circuits showed the need for redesign of these circuits to eliminate the rotary union in the shaft cooling circuit at the upper end of the pump shaft. The cooling circuits were modified, and the cooling and lubricating oil now enters the bearing housing between the upper bearing and the lubricant-to-air face seal. Upon entry, the oil is divided; some of it trickles over the bearings for lubrication and heat removal and the other portion passes into the hollow shaft for heat removal. All the oil collects below the bottom bearing in a cavity outside the primary face seal. It flows from the cavity by gravity through nine 1/4-in. IPS connections at the bottom of the bearing housing to the lubricant reservoir for cooling and recirculation.

Heat exchanger tests indicate that one operating and one spare oil circulating pump will be required for each of the sodium and fuel pumps.

Ref. 9, p. 20-21; Ref. 10, p. 11; Ref. 11, p. 21-22; Ref. 12, p. 15-16.

H. Gas-Sealed Sump Pump For In-Pile Loop Test - Model "LFA"

Development was started on a pump for in-pile loop tests utilizing the laboratory-size gas-sealed pump, Model "LF", scaled down to reduce the fluid holdup in the pump. The pump is Model "LFA" and the drawing is shown in Fig. 12. Water tests of the first pump constructed show that the pump head and flow are within design specification; however, a fluid gassing problem existed which required some design changes.

While some gassing of the fluid is evident under all operating conditions, its magnitude increases rapidly as the height of the free fluid surface above the suction is decreased or the shaft speed is increased. This indicates that the difficulty is caused by vortexing of the free fluid surface because of shaft rotation. As an initial attempt to suppress vortexing, changes were made in the antiswirl baffles in the pump, and the opening through which the rotating shaft enters the suction chamber was moved to a point well below the free surface of the fluid.

With these design changes incorporated in the pump it was found that the gas entrainment in the fluid at shaft speeds and flow rates ranging to well above the design conditions no longer occurred. The pump is sealed with a Morganite (MYIF) face seal, and the shaft and seal are cooled by circulating oil.

An additional two pumps have been fabricated and testing has been started.

One pump was tested for 218 hr with fused salts at 1200°F and 305 hr at 1400°F. The normal operating conditions during this test included a shaft speed of 3200 rpm and a flow rate of 1.3 gpm with a developed head of 26 feet. The second and third pumps are undergoing water tests preparatory to testing at 1500°F with sodium.

Ref. 12, p. 23 and Ref. 13, p. 15.

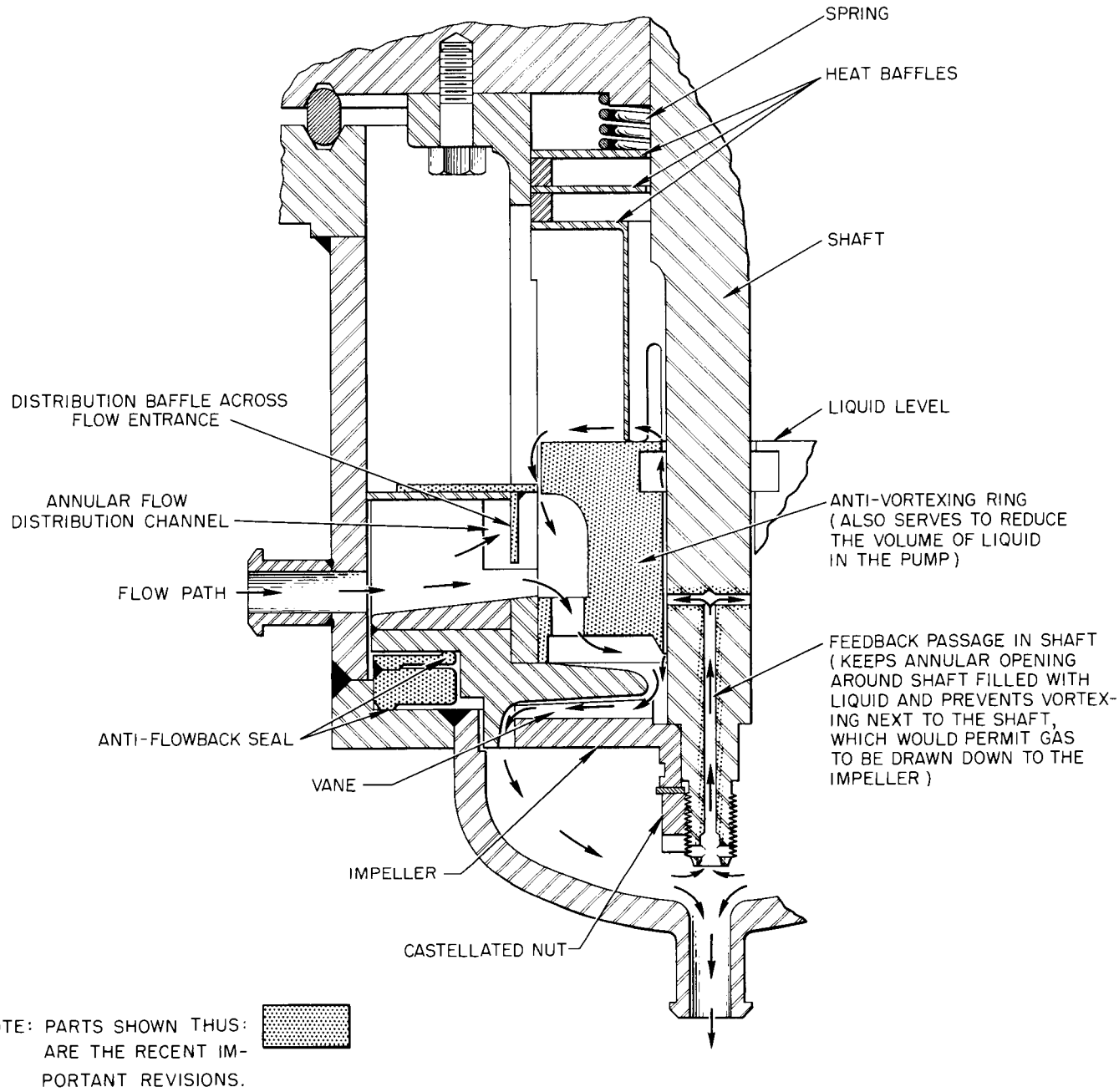

Fig. 12. Vertical-Shaft Sump Pump (Model LFA) Showing Modifications Made to Prevent Gassing

II. FROZEN SEAL PUMPS

A. Frozen Sodium Seal

1. Modified Worthington-Frozen Sodium Seal

A Worthington pump, Model "3/4 CG-1", was modified for pumping sodium using a frozen sodium seal. To provide for the seal, a section of impeller casing surrounding the shaft between the impeller and bearings was wrapped with copper cooling coils through which refrigerated kerosene was circulated. It was later found that water would safely provide sufficient cooling. Since the cooling requirements to insure a frozen seal were relatively small, cooling the seal annulus by forcing cooling air over the seal housing was considered. A finned section surrounding the seal annulus would replace the copper cooling tubes. This cooling technique was not tested. Fig. 13 is a sketch of the air cooled version.

First Test Series: The modified pump was operated in an isothermal sodium loop system for 450 hr at sodium temperatures up to 1100°F. The operating temperature was limited due to pump casting repairs in which silver solder was used. Flows up to 40 gpm with a 25 psig pressure differential across the seal were achieved. No indication of seal failure was observed.

Second Test Series: The pump was installed in a Figure 8 loop system for further testing. The pump operated 1500 hr in this system with maximum sodium temperatures in the loop of 1500°F and at the pump, 1000-1100°F without seal failure.

The parting faces of the pump were sealed with a copper gasket. Mass transfer of the copper from the gasket to the shaft in the cold section of the sealing annulus occurred. The resultant buildup on the shaft filled the annulus and froze the shaft. The copper gasket was replaced with a soft nickel gasket and the mass transfer action was reduced to a tolerable rate.

UNCLASSIFIED
PHOTO 22751

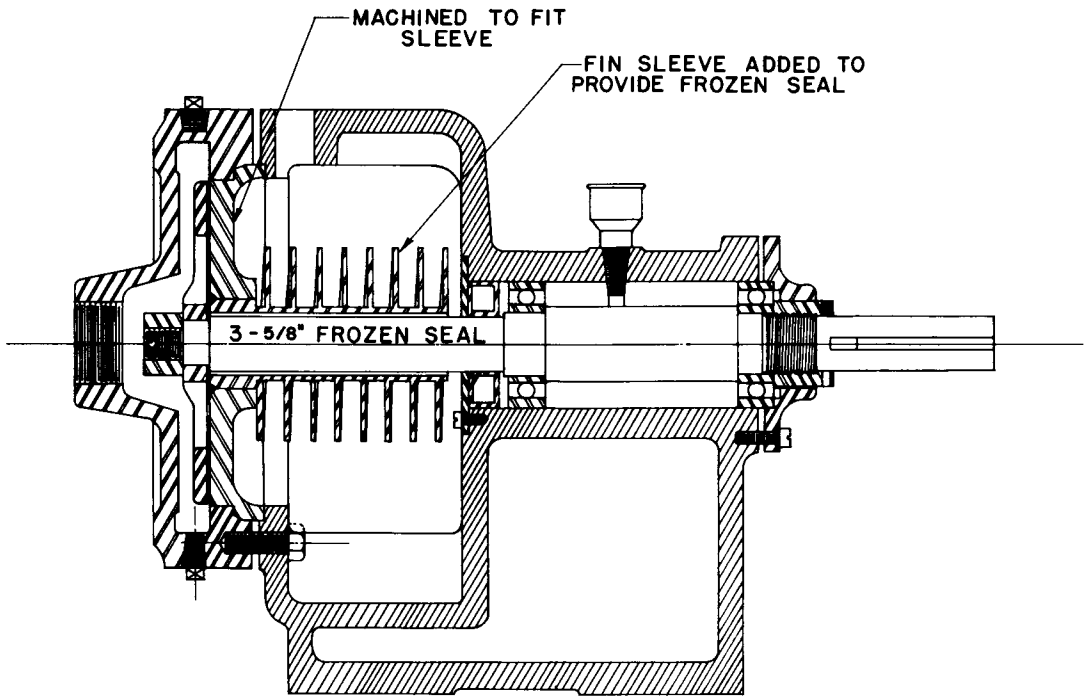

ASSEMBLY
FULL SCALE

FIGURE 13. MODIFIED WORTHINGTON PUMP—FROZEN SEAL
(THIS VERSION WAS NEVER FABRICATED)

The pump could be started from standby conditions without difficulty. Some bearing failures occurred due to the proximity of the bearing housing to the high temperature pump casing.

Third Test Series: The pump was then operated for 3000 hr in the Figure 8 loop. In test series 1 and 2 the cooling fluid for the seal was kerosene. Water was substituted for this testing period and proved satisfactory.

The sealing annulus, originally 0.020 in. clearance, was machined to give 0.035 in. clearance between the shaft and sleeve, and a solid shaft was substituted for the original hollow shaft. Test results indicated that shaft clearance over a fairly wide range was not a critical parameter in this design of a frozen seal.

The testing of the pump was terminated after more than 4000 hr of pumping sodium at temperatures from 800° to 1200°F. During most of the test the sodium temperature at the pump inlet was approximately 1100°F. The pump performance curves are shown in Fig. 14.

Shaft speed during the greater part of the test was 2000 RPM. Pump operation during the test was smooth except for a short period during which there was interference between the impeller and the pump housing. Inspection of the shaft after disassembly showed the shaft to be in excellent condition except for a buildup of nickel on the shaft at the solid sodium-liquid interface. The buildup of nickel was caused by mass transfer from the nickel sealing ring at the parting faces to the cold region of the seal. This buildup caused no operational difficulties but it does indicate that nickel will not be entirely satisfactory for use as a sealing gasket at the parting faces for high temperature pumps that are to be operated for extended periods.

Ref. 4, p. 42; Ref. 5, p. 27; Ref. 6, p. 18; and Ref. 7, p. 15.

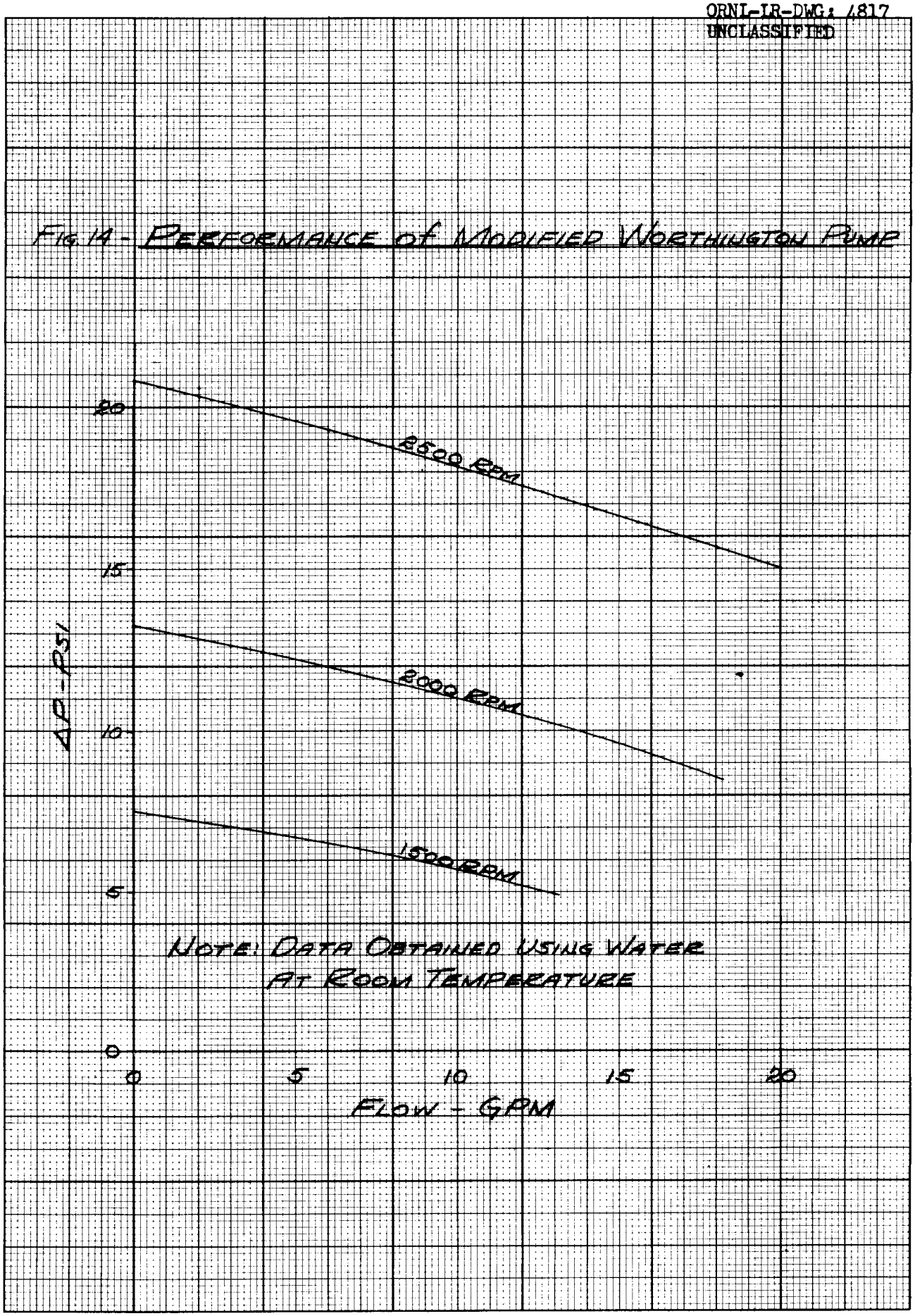
FIG. 14 - PERFORMANCE OF MODIFIED WORTHINGTON PUMP
20
15
10
5
0
ΔP - PSI
2500 RPM
2000 RPM
1500 RPM
NOTE: DATA OBTAINED USING WATER
AT ROOM TEMPERATURE
0
5
10
15
20
FLOW - GPM

2. ARE Size Pump Model "FP"

A standard commercial pump base with ball bearings that support a horizontal, overhung shaft provides the foundation for the pump. The pump casing is supported through the sealing head and casing extension. The sealing head is sealed to the pump casing with a commercial oval-ring gasket in a bolted flange joint. By removing this joint from the hot region near the pumped liquid and away from regions requiring preheating, satisfactory sealing is readily accomplished.

Pump suction and discharge connections to the circulating system are made by welding. The pump impeller is type 316 stainless steel cast from standard Worthington Pump Co. patterns. The discharge case is machined from heavy stainless steel forgings and has a concentric volute and a welded tangential discharge. The impeller is double-keyed to the overhung shaft and is held in place by a thrust nut and a locking screw. Normal radial clearances are employed between the impeller hubs and the sealing labyrinths, and an axial clearance of 5/32 in. in either direction prevents jamming resulting from differential thermal expansion. The shaft seal is of the frozen-packed design; the gland for the stuffing box provides the region for the frozen seal. To prevent cracking or checking of the hard surface material on the shaft, the material is applied as a loose-fitting, prefabricated sleeve. The concentricity between seal and shaft and the differential expansion are controlled by angle-bending the inside of both ends to the geometrical angle of the sleeve.

A cartridge type of electric heater is provided in the center of the shaft for control of temperatures. A turbo-slinger arrangement is provided just outboard of the seal gland to maintain a suitable temperature

on the oil seals and bearing. Two independent heaters are provided on the outer surface of the seal shell for further control of the temperatures in the seal region. Provision is made for the circulation of a coolant through selected portions of the shaft. Circulation of lubrication through the bearing housing is provided to minimize effects of radiation damage to the lubricant.

The pump provides a seal for NaK for system cleaning by maintaining molten sodium in the gland groove and freezing on both sides of the annulus. During operation with fluorides, this annulus will serve as a shield to prevent the loss of enriched material by guiding the expected slight leakage to a container. The coolant for freezing the sodium is to be kerosene at approximately 50°F. A beveled surface on the gland makes a metal-to-metal seal against the inner edge of the seal shell to form a NaK-tight seal around the outer surface of the gland. This frozen-sodium seal also seals the system during vacuum removal of the NaK. During operation with NaK, the cartridge heater is removed from the center of the shaft, and a squirt tube arrangement is inserted to circulate cooled kerosene.

The only alteration necessary to make the pump suitable for circulating NaK as a moderator and reflector coolant is the elimination of the shaft sleeve and the seal heaters.

The pump, Fig. 15, was incorporated in a loop in which NaK was pumped. The most critical feature of the pump is the frozen sodium seal. Three tests were run with the pump operating for 15 min, 4 hr, and 1 hr. Each test was terminated because of excessive seal leakage. Chemical analysis of samples of leakage material indicated the presence of from 1 to 7.5% potassium. (NaK serves as a solvent for sodium.)

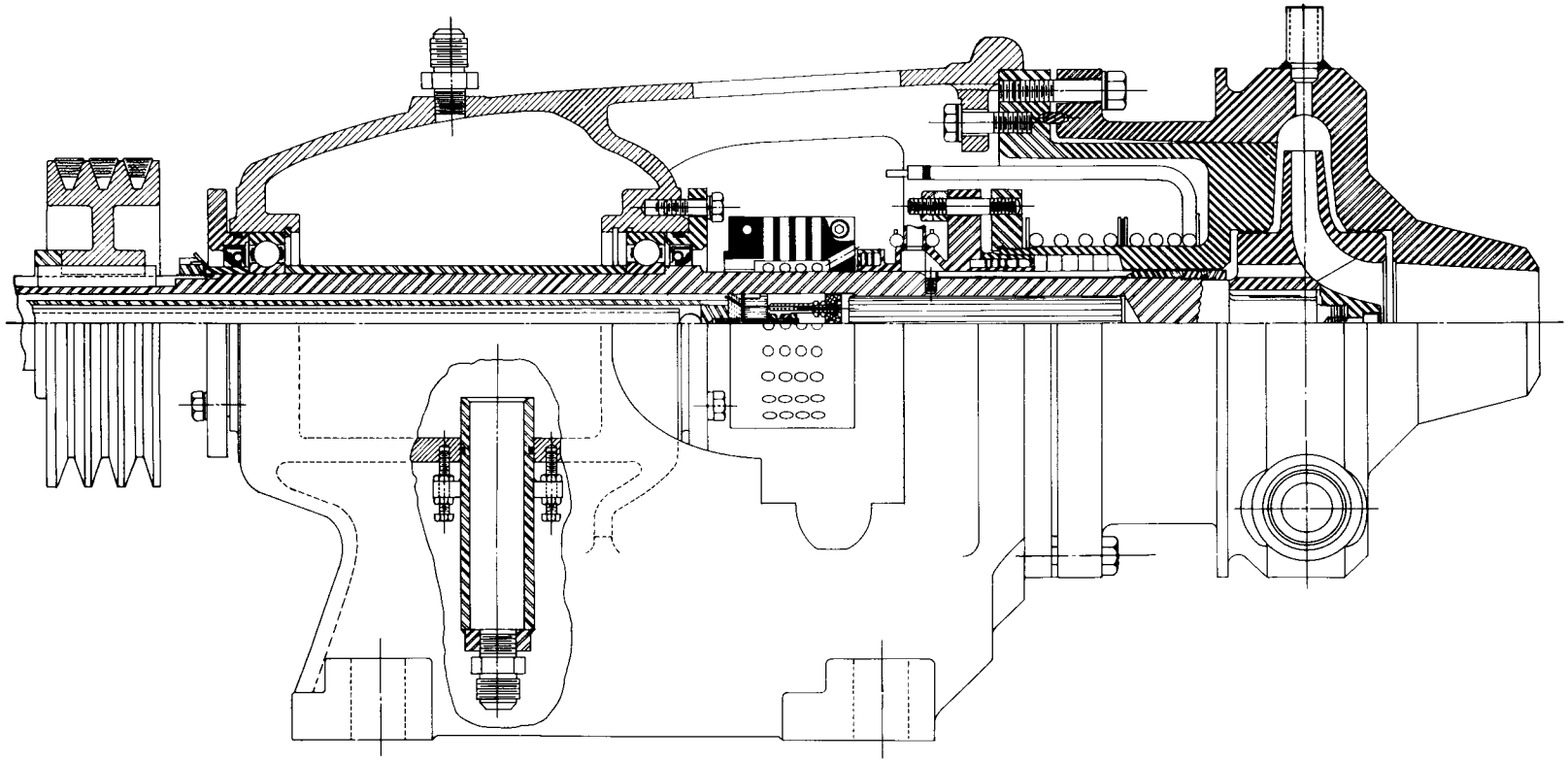

FIGURE 15. ARE SIZE PUMP-MODEL "FP"

PHOTO 22750 [redacted]

In an effort to provide data which would give a better understanding of the frozen-seal mechanism the pump was operated in a system in which helium was pumped. Successful operation, as a gas seal, was obtained over the available range of speeds, 400 to 1920 rpm, and the temperature of the sodium, from the external source, in the gland groove varied from 300 to 400°F and with pressure differences as high as 60 psi.

Since the pump did not operate successfully with NaK, it was modified for testing with sodium. For operation with sodium, the external supply of sodium to the seal is not needed and a larger surface will be presented for seal cooling. The new sealing gland has a length-to-diameter ratio of 2.3 in contrast to the ratios of 0.6 and 0.2 for the inside and outside glands used with the externally supplied sodium. The radial shaft-to-gland clearance was increased from 0.015 in., used with the externally supplied gland, to 0.030 in. for the longer gland. The sodium freezing gland is 5 13/16 in. long and shaft diameter is 2 1/2 in.

The pump operated pumping sodium for 1273 hr at 100 gpm and 20 psi developed head and with sodium temperatures of 1100 to 1250°F. Pump suction pressure was varied from 10 to 50 psi to get data on seal leakage. Six pump shutdowns were made to correct loop difficulties or to make loop changes. Shutdowns and startups were made without difficulty, although considerable time (1 to 2 hr) and care are required to effect a satisfactory startup because of the necessity of heating the frozen seal area.

Difficulties with seal seizure and roughness were eliminated by maintaining a helium gas blanket between the cold end of the seal and the atmosphere. The helium pressure also decreased the pressure differential across the seal and maintained low leakage at low operating power. Without the

helium pressure, at low powers, leakage was excessive. When the cold end of the seal was open to air, operation deteriorated over a period of three or four days and usually ended in sudden shaft seizure. That this was due to oxide accumulation in the seal appears obvious, since the condition was alleviated by addition of the helium gas blanket. however, the seal also accumulates oxygen from within the system, since it contains the coldest sodium of the system. Seal roughness and relatively high leakage rates were observed following periods of no flow through the bypass filter in the loop. The deterioration of operation resulting from this condition is best alleviated by maintaining clean sodium in the system and, if necessary, by infrequent clean-outs of the sodium in the seal.

Post-run inspection of the pump showed the interior surfaces to be in good condition, although some wear between impeller hubs and mating surfaces was observed and the shaft surface at the seal was roughened.

In order to lower the power consumption of the seal and yet maintain low leakage, the pump was redesigned, Fig. 16, Model "FNAB", to accommodate a 1/2 in. long freezing gland with gas pressure backing. The new, short sealing gland was mounted on the 2 1/2-in.-dia shaft with a 0.005-in. radial clearance between the shaft and the gland. With the helium chamber for "backing-up" the seal, it is possible to reduce the pressure stress on the seal from 50 to 5 psi. The helium chamber is sealed from the atmosphere by a rubber O-ring rotating seal.

For the first 168 hr of operation with the new short seal, the sodium temperature of the pump was 260°F, the suction pressure was 20 psig, and the backup pressure was 15 psig. The total sodium leakage past the seal during this period was 32 cm^3 or an average of 4.8 cm^3 per day. Approximately 3/4 hp was dissipated in the seal and the power trace was smooth.

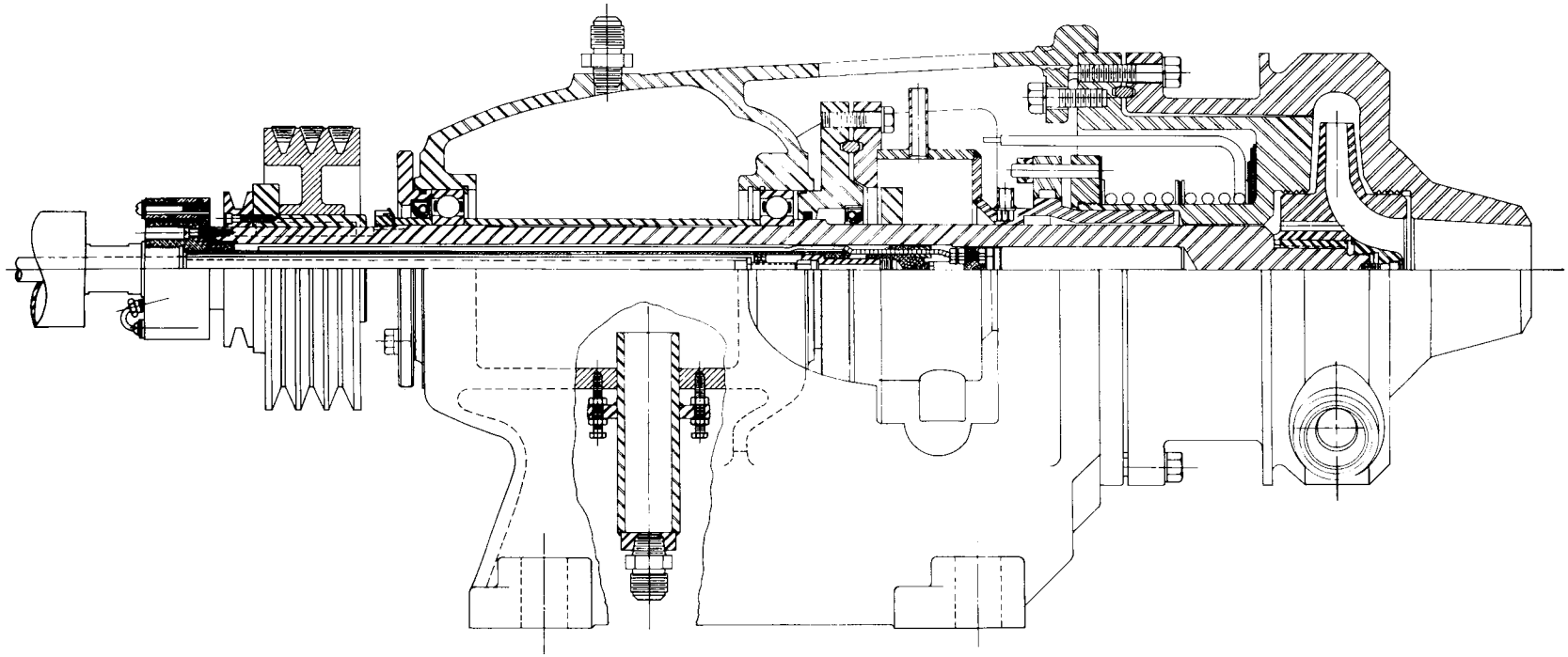

FIGURE 16. ARE SIZE PUMP-MODEL "FNAB"

PHOTO 22748 [redacted]

The Buna N rubber O-ring used to seal the backup gas was destroyed during the application of heat to remove the sodium leakage at the end of 168 hr, and the remainder of the testing was accomplished without the use of back-up pressure. Operation was continued for a total of 980 hr with a shaft speed of 1800 rpm, a sodium temperature of 960°F, and a suction pressure of 12 psig. A slight flow of helium was maintained across the back of the seal. The increase in the pressure differential across the seal from 5 psig during the first part of the test to approximately 12 psig during the remainder of the test resulted in an increase in sodium leakage past the seal to approximately 20 cm^3 per day.

Erratic power fluctuations caused by sodium oxide migrating to the cold section of the seal became negligible when a standard, cold-trap, by-pass filter was installed in the loop.

The results of these tests led to the conclusion that a frozen-sodium shaft seal, for some applications, is manageable for a sodium pump. A satisfactory length-to-diameter ratio for such a seal is approximately 0.1 to 0.3. Leakage of the sodium past the seal can be made negligible by using backup pressure to reduce the pressure differential across the seal. Water cooling is an efficient means of freezing the seal, and it has been demonstrated that the hazard in using water with a properly designed seal is trivial.

Ref. 8, p. 21; Ref. 10, p. 11-15; Ref. 11, p. 20-21; and Ref. 12, p. 23.

B. Frozen Fluoride Seal

1. ARE Centrifugal Pump Model "F".

The Model "F" pump is almost identical to the Model "D" and Model "DA", with the exception of the inclusion of a gas cooled section in which the fluorides surrounding the shaft will be frozen.

Detail design was made, but the pump was never fabricated.

See the discussion of the ARE Model "DA" pump for design details, also Fig. 17.

2. Frozen Fluoride Seal Modified Durco Pump.

A Durco pump was modified to incorporate a frozen fluoride seal, Fig. 18. The seal was cooled by blowing air across a finned sleeve constructed of 316 stainless steel. Diametral clearance between shaft and sleeve was 0.016 in. Parting face of the pump was sealed with a nickel ring gasket. Bearings were originally lubricated through the use of grease fittings. For high temperature operation it is more practical to handle bearing lubrication by a flowing oil system. The bearings are then both lubricated and cooled since the lubricating oil is circulated through a cooling radiator.

The pump was operated in an isothermal loop pumping 1100°F fluorides for 500 hr. Pump operation was limited to 1100°F because of differential thermal expansion between the shaft and pump housing. Above this temperature, axial interference between the impeller and housing occurred. Although the test was terminated because of a slow leak at the parting face of the pump, the seal was completely successful during the period of operation in its function as a seal. From an operational viewpoint difficulties of a rather serious nature were encountered. The pump could not be stopped for periods longer than 5 min without considerable difficulty in restarting.

[redacted]
PHOTO 22747

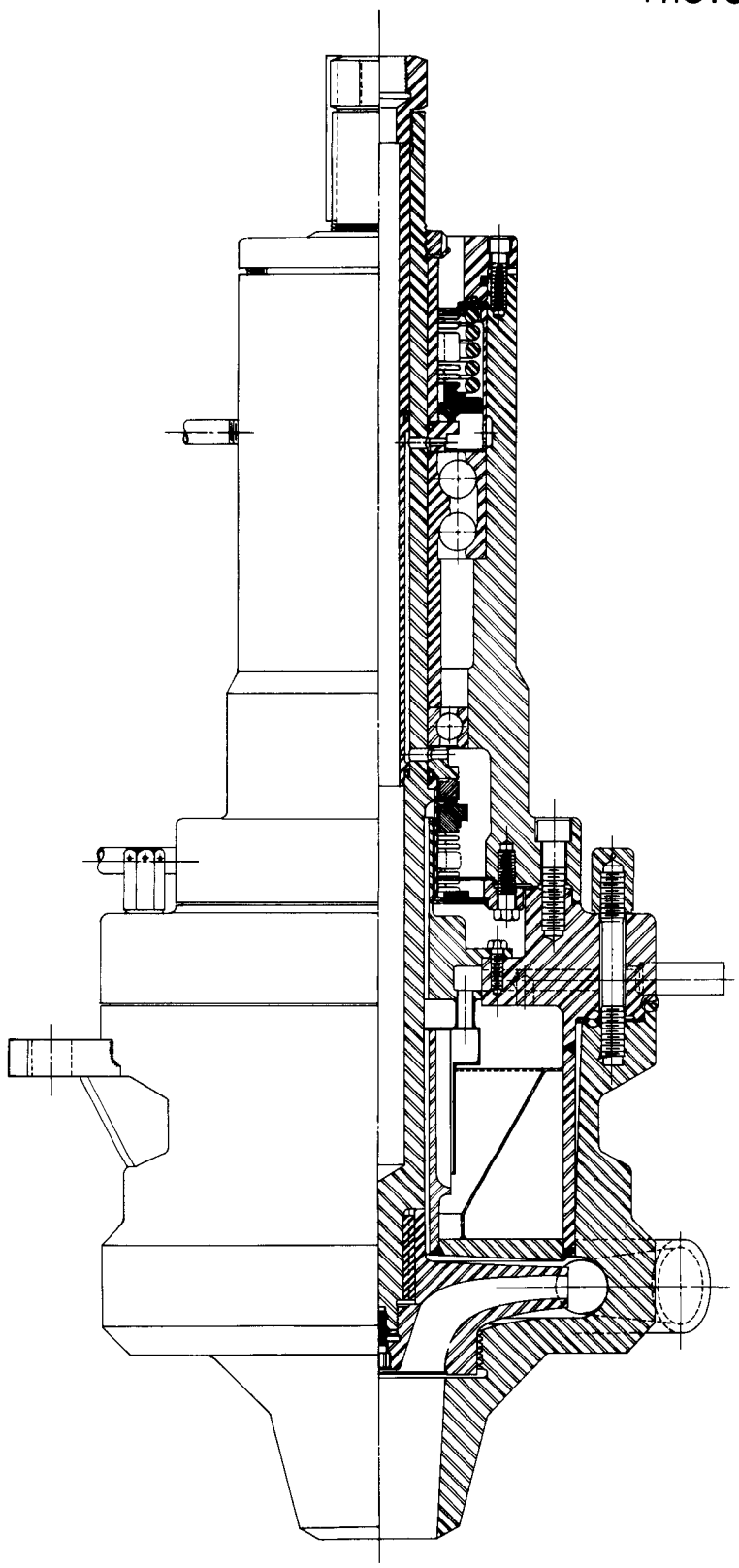

FIGURE 17. ARE SIZE PUMP MODEL "F"
(THIS PUMP WAS NEVER FABRICATED)

UNCLASSIFIED
PHOTO 22752

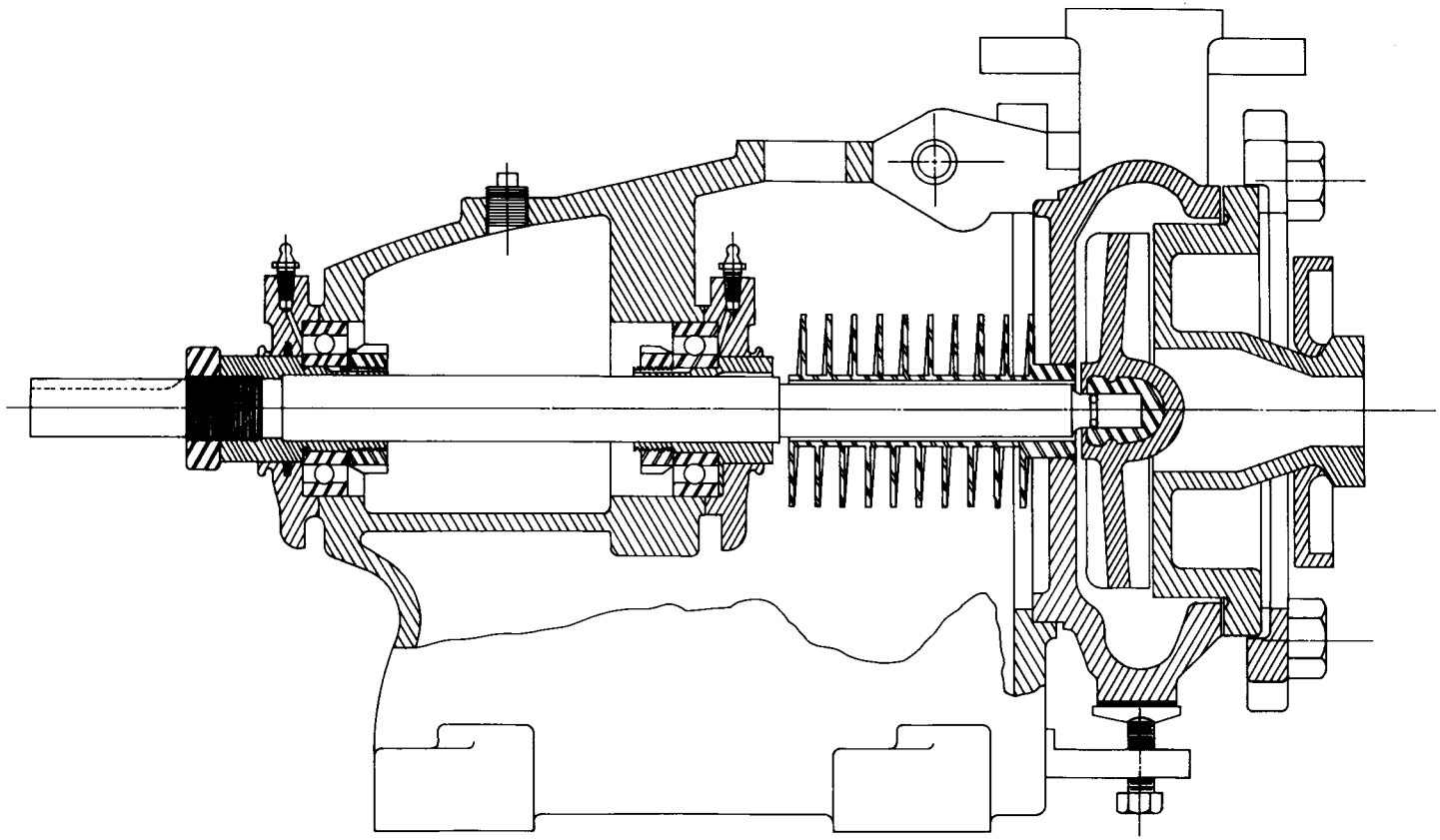

ASSEMBLY
NOT TO SCALE

FIGURE 18. MODIFIED DURCO PUMP WITH FROZEN SEAL

Upon stopping, the frozen fluorides in the seal bonded the shaft tightly to the sleeve and it was necessary to apply sufficient heat to melt the fluorides before operation could be resumed.

Upon examination of the pump shaft and the internal surfaces of the sleeve it was found that there was only a moderate amount of scoring of the shaft. The scoring was not considered to eliminate its use for periods of 1000 hr, or less, of operation and it probably can be helped by coating the shaft with Stellite No. 3, whereas Stellite No. 6 was used. No bearing difficulties were encountered during the test.

Ref. 7, p. 16.

3. ARE Size Pump - Model "FF"

At the conclusion of the testing of the Model "FCH" pump* it was proposed that a purely frozen fluoride seal be tested. The modification necessary for the new seal was simply the insertion of a new seal housing in place of the one used on the "FCH". The modification is shown in Fig. 18A. The packing annulus in operation would contain molten fluorides and the seal section would be 1/4-in. long located at the far end of the packing annulus. Water is circulated in the new seal housing to freeze the fluorides at the seal section. Helium is circulated to reduce oxide accumulation and reduce the differential across the seal at the back side of the frozen seal. Thermocouples were located in the molten fluoride annulus wall for temperature indication. Calrod heaters were placed on the outside of the annulus housing and a cartridge heater was located inside the shaft for temperature control of the seal and molten fluoride in the packing annulus.

The pump was tested in fluorides at 1300°F. Successful operation was not achieved. This type seal requires precise temperature control both of the molten fluoride in the packing annulus and at the seal section. The pump was difficult to start requiring excessive power. The frozen fluoride scored the shaft at the seal section and thereby presented a larger clearance for molten fluoride to leak through. Gross leakage occurred flowing into the helium backup chamber. No further development was considered for this pump.

Ref: Discussion with D. F. Salmon.

* Cf. sec. III.A.4., this report.

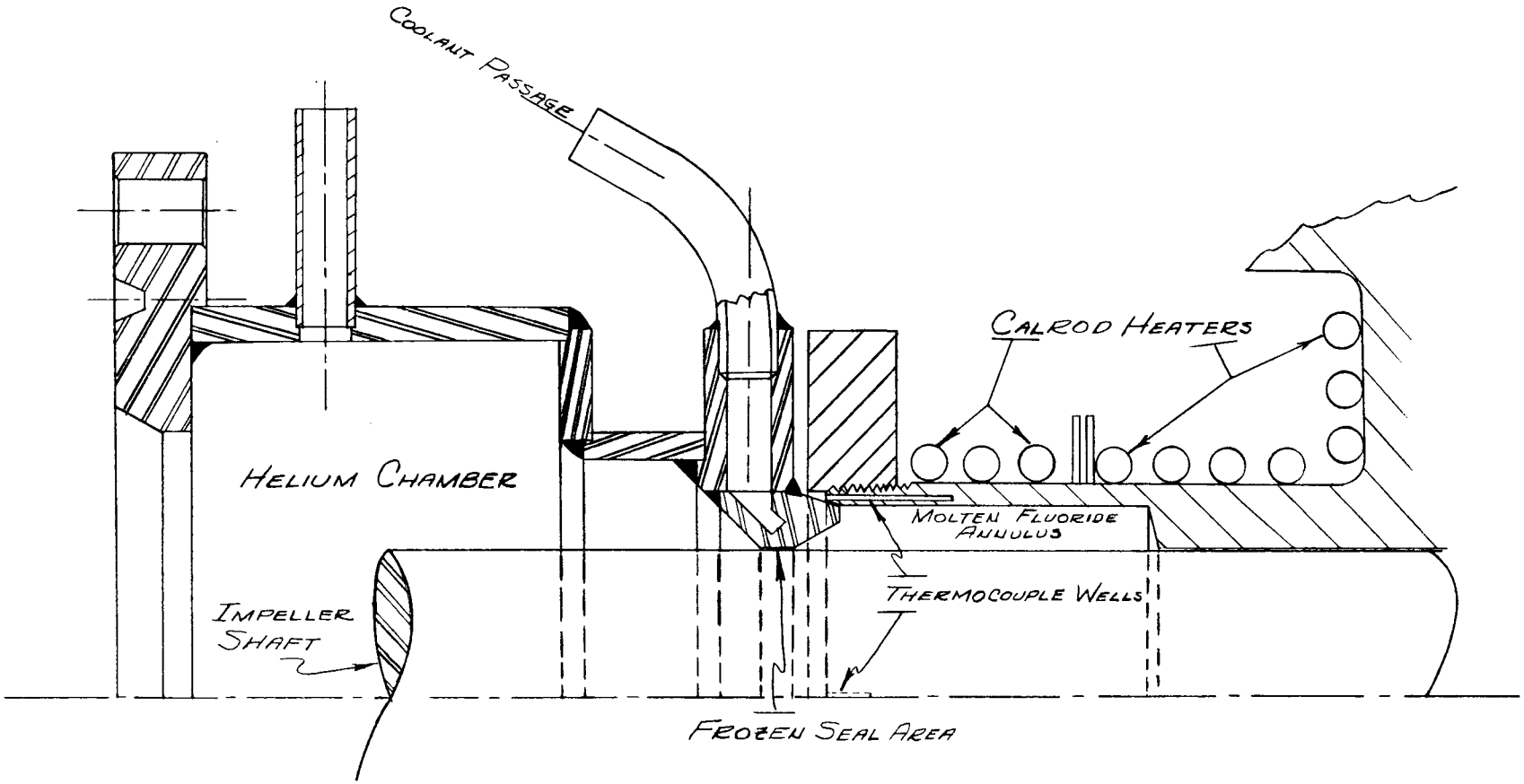

FIG. 18A - MODIFIED SEAL SECTION USED ON THE MODEL "FF" PUMP

ORNL-IR-DWG: 4818

C. Frozen Lead Seal

1. Centrifugal Pump Model "FPB"

Seal tests had indicated that a frozen lead seal has smoother operating characteristics than a frozen fluoride seal and that molten lead and molten fluorides do not intermix when in intimate contact with each other. The pump used with a frozen fluoride seal was modified to incorporate a frozen lead seal. In this redesign, the pump is mounted in a vertical position and inverted, that is, with the seal below the impeller. A chamber equipped with immersion heaters located immediately below the pump impeller housing contains both molten lead and fluorides at 1000°F. Because of the difference in the densities of the two mixtures, the fluorides float on the lead, and a sharp fluoride-lead interface is maintained if turbulence in this region is not too great. A frozen-lead seal is accomplished in the bottom of this chamber in a liquid-cooled seal annulus that is approximately 1 inch long and has approximately 0.030 in. radial clearance around the 2 1/2 in. diameter shaft. Sealed bearings were used and coolant was forced up through the center of the shaft in the bearing section.

The pump was tested circulating fluorides for 120 hr. The test was terminated when it was found that lead from the seal reservoir had been carried out into the loop. A combination of the mixing action of the rotating shaft at the lead-fluoride interface and of the high rate of fuel circulation over this region because of the thrust-relieved impeller seems to have caused this lead transfer.

Operation of the seal appears to have been satisfactory; the power input to the seal is low and it is relatively insensitive to speed and pressure changes. Ten stop-start tests that ranged in duration from 1 min

[redacted]
PHOTO 22755

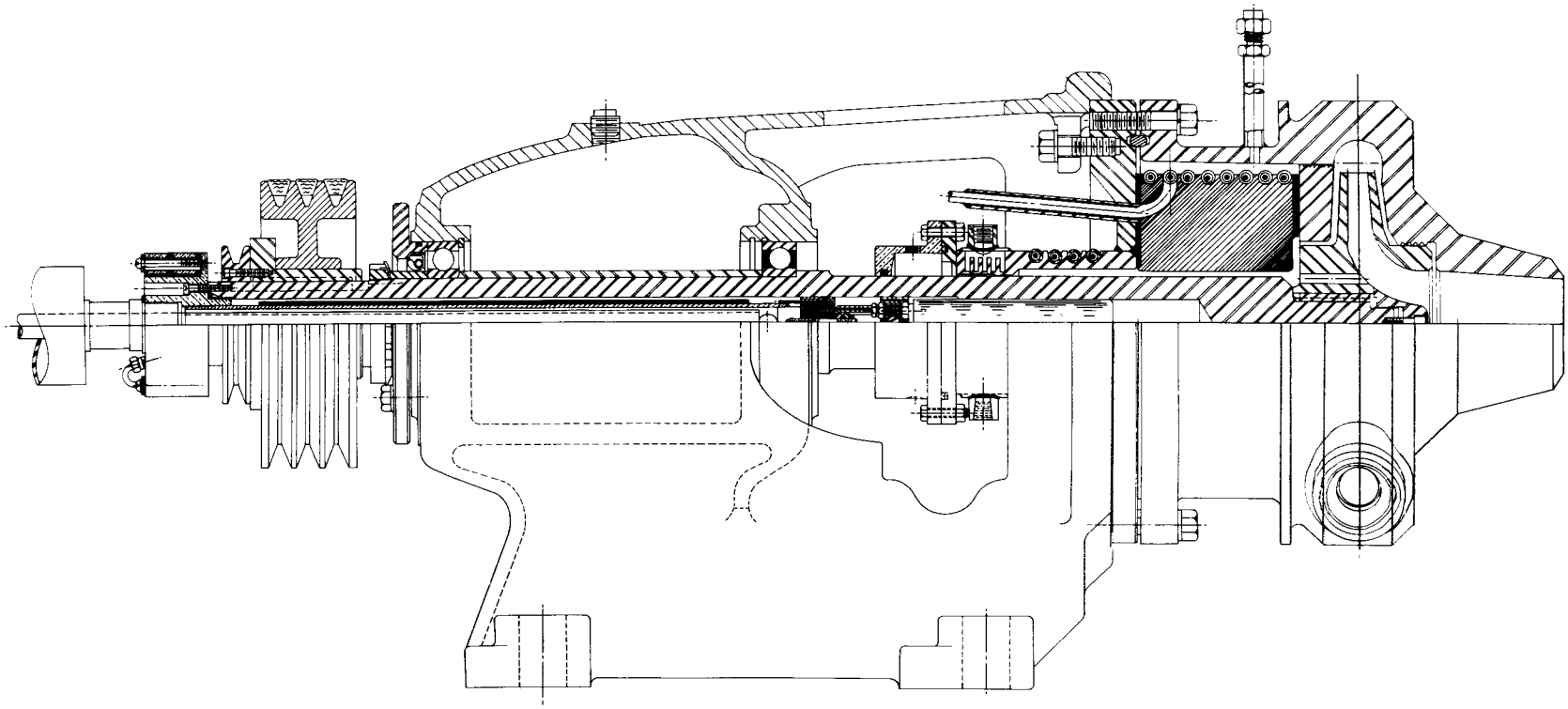

FIGURE 19. ARE SIZE PUMP-MODEL "FPB"

to 1 1/2 hr were made during the run. A helium blanket was maintained over the outer end of the seal to slow any oxidation which might occur in the seal region.

A subsequent test with a 2 1/2 in. diameter shaft rotating in a pot containing both lead and fluorides at 1200°F showed that the fluorides contained approximately 5% lead during operation and that the lead immediately settled to the bottom when shaft rotation ceased. The mixing during operation makes this type of seal impractical for sealing a fluoride pump. No further development work was considered.

Ref. 10, p. 15; Ref. 11, p. 23.

III. COMBINATION PACKED FROZEN SEALED PUMPS

A. Modified Durco Pump with Combination Packed-Frozen-Seal Model LG, Model LH and Model LHA

A Durco pump was modified to incorporate a stuffing box type seal packed with inconel braid and nickel and graphite powders. The packing gland length was increased to 2 1/2 in. and means for providing constant pressure lubrication of the seal with tricresyl phosphate was added, Fig. 20. The pump was operated for 550 hr pumping fluorides at temperatures from 1150°F to 1300°F delivering 16 gpm at 35 ft head and a shaft speed of 1500 rpm. The test was terminated because of a valve failure in the loop. During this period of operation it was found that the seal was effective only if the back end was at a temperature below the freezing point of the fluoride. In effect, the seal only functioned properly when operating as a frozen seal.

Pump power surges of approximately 0.5 kw and about 1/2 min duration occurring at intervals of 2 to 3 min were observed. These power surges were not as large in magnitude as found with the plain frozen seal. Since the length of frozen fluoride in contact with the shaft in this pump is less than that of the purely frozen fluoride seal it is to be expected that power surges would be less. The lubricant, tricresyl phosphate, would reduce the amplitude of the power surge only temporarily and not the frequency of occurrence.

Examination of the shaft after the test showed severe scoring in the frozen seal region (.056 in. on the diameter of the 1 1/2 in. shaft). The shaft had been coated with Stellite No. 6.

The following changes were then incorporated: pump shaft resurfaced; packing changed to nickel-foil wrapped braid with graphite powder between packing layers; seal lubricant was omitted.

UNCLASSIFIED
PHOTO 22759

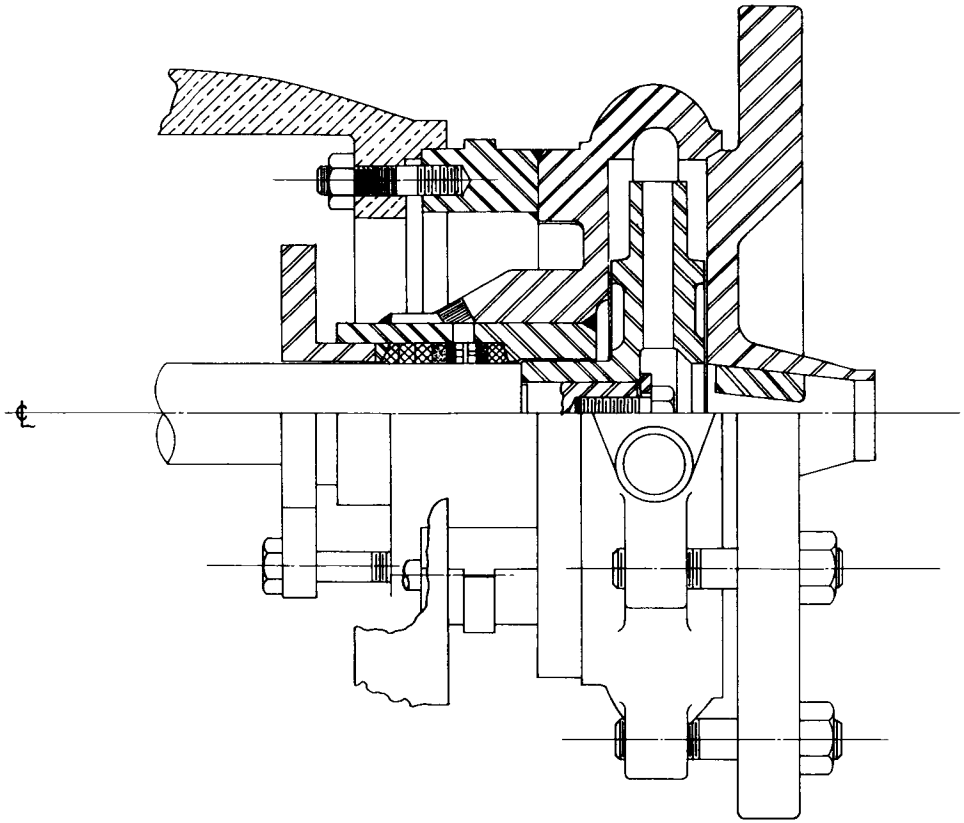

FIGURE 20. CENTRIFUGAL PUMP MODEL "LG"
(REWORKED ASSEMBLY)

The pump was then operated for 600 hr. Loop shut down was caused by leakage of the pump flange. Closer temperature control of the frozen seal area, 750°F to 800°F, resulted in smoother pump operation. In the previous test this temperature varied over the range 600°F to 800°F. Leakage of fluoride from the seal varied from 1 to 3 g per day. The packing temperature was maintained at 1050°F. Pump performance curves are shown in Fig. 21.

Starting the pump, after shutdown periods of 60 sec or less, required heat addition to the seal area. The shaft-seal area quickly froze after the shaft stopped rotating and it was necessary to apply heat to bring the fluoride in the seal area to 850°F before a startup could be made. As the pump starts, it is also necessary to remove the heat supply quickly or excessive leakage will occur through the seal.

A large capacity Durco Pump was similarly modified. It is a 50 gpm pump with a Stellite No. 6 coated 2 1/2 in. diameter shaft. The pump was given the designation Model LH and is shown in Fig. 22. Operation in fluorides at 1200°F for about 85 hr indicated that the seal arrangement was unsatisfactory. The test was terminated because of shaft seizure in the packing area. The seal consisted of a packing of 1/4 by 1/4 in. Monel braid wrapped in nickel foil. Examination of the shaft after the run showed that very severe scoring had occurred. Some grooves were 0.049 in. deep.

It was concluded from this test that small packings alone are inadequate. Compressive loading to minimize leakage will be high and will result in excessive wear because the poor penetration of liquid fluorides will prevent their acting as a sort of lubricant. Subsequent packings should include graphite or MoS_2 as a lubrication source.

ORNL-LR-DWG: 4819

[redacted]

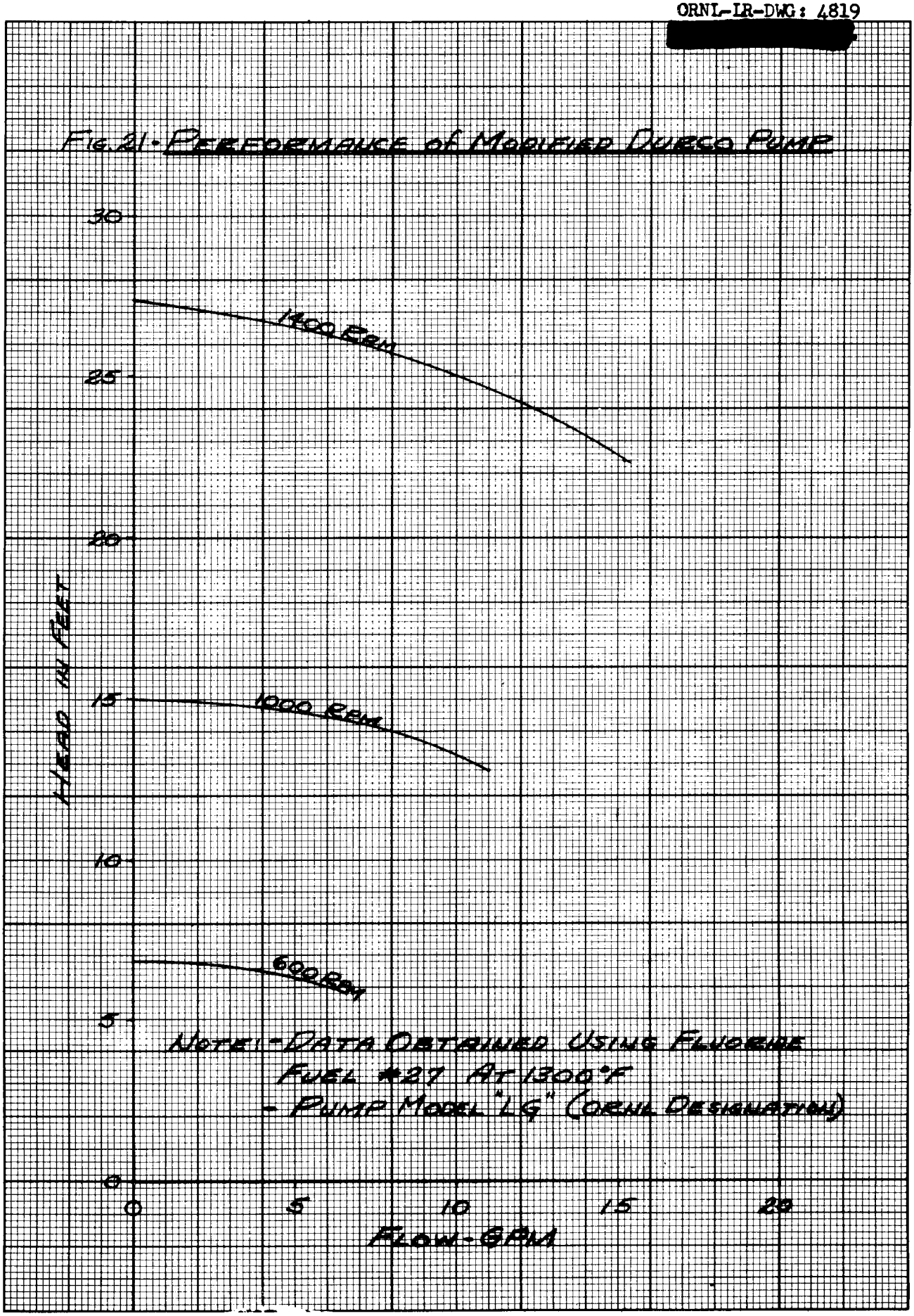

UNCLASSIFIED
PHOTO 22758

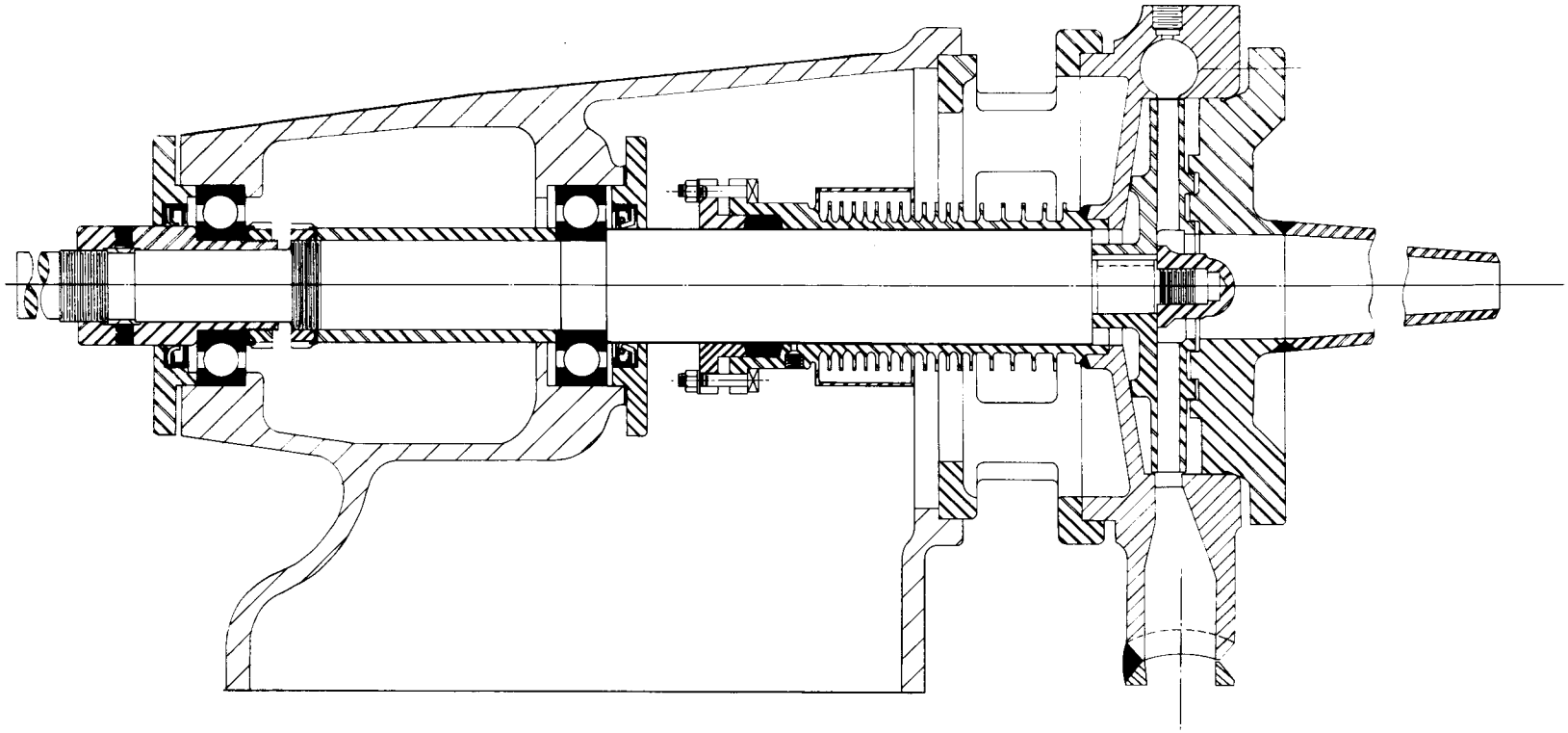

FIGURE 22. CENTRIFUGAL PUMP MODEL "L H"

Three test series were then conducted in which packings containing a self lubricant were used. This pump was designated the Model "LHA" and is shown in Fig. 23. The operating conditions for these tests were: pump speed, 900 to 1400 rpm; pump suction pressure, 4 to 6 psi; pump discharge pressure, 30 to 60 psi; fluid flow, 10 to 30 gpm; fluid temperature, 1200°F. The fuel leakage rate past the seal was 40 to 150 g per 24 hr period.

In the first of these tests, the gland was packed with Dixon's "Microfyne" flake graphite powder retained by close-fitting APC graphite rings at each end of the packing gland. Initial dry runs, without fluorides present, showed this packing to be quite sensitive to compressive loading. Approximately 35 psi was found to be a maximum packing loading for smooth, dry operation without the seal heating excessively. During the 340-hr test run the leakage of solid fuel from the seal varied from 60 to 75 g per day during operation with pressures in the 5 to 10 psi range. The gradual loss of graphite from the seal caused the termination of the test.

For the second test, the seal was packed with braided copper sheathing filled with MoS_2 powder. The power required to rotate the shaft was quite low, but operation was characterized by considerable leakage of MoS_2 powder from the seal. After 260 hr of operation, sufficient MoS_2 powder had been lost to cause fuel leakage through the seal. Post-run examination of the seal showed the copper sheathing to be generally worn at the shaft surface. Stop-start tests were difficult to make during this run, and they always involved the danger of a massive leak, because the temperatures in the seal could not be measured accurately or readily controlled.

UNCLASSIFIED
PHOTO 22754

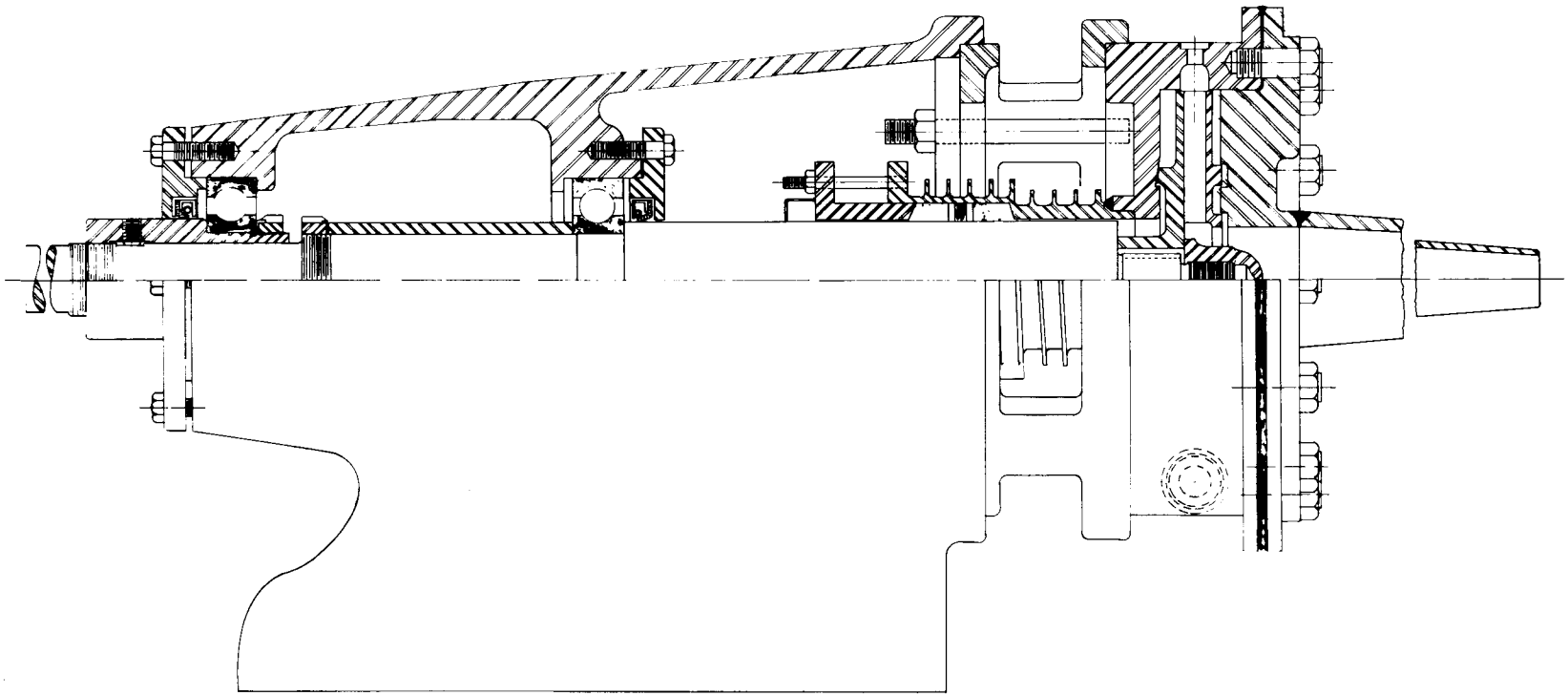

FIGURE 23. CENTRIFUGAL PUMP MODEL "LHA"

The packing gland, for the third test, was filled with strands of copper wire impregnated with MoS_2. Smooth operation was experienced in the early stages of this run; however, power fluctations became greater, and more power was required to drive the shaft as the test progressed. The test was terminated after 385 hr because of a gross seal leak that resulted from frictional overheating of the seal.

Ref. 8, p. 18; Ref. 9, p. 18; Ref. 10, p. 10.

4. ARE Size Pump - Model "FCH"

An ARE size pump was modified to test a packed frozen fluoride seal. The seal packing consisted of strands of copper wire rope which were soaked in an oil suspension of MoS_2 for a period of 24 hr before installation. A Carboloy sleeve was placed under the seal area and integral with the main shaft. Heat was supplied to the seal by electrical tubular heaters on the outside of the shaft housing and a cartridge heater inside the shaft. Cooling of the seal area was achieved by introducing compressed air between the anchor flange and the packing gland flange and allowing the air to pass out through multiple holes around the nose of the gland slightly oblique to the shaft axis. This cooling was supplemented by two small centrifugal blowers directed against the rear of the packing gland and seal, Fig. 24. The pump and test loop of 1 1/2 in. IPS pipe were constructed of 316 stainless steel.

The pump was operated for 49 hr circulating fluorides. During the test, the pump operated at 1250 rpm with a flow of 45 gpm and produced a head of 55 psi. Power input to the pump drive motor was 5.5 , with an estimated 3-hp input to the pump shaft and 0.75 hp absorbed in the seal. Fluoride chip leakage from the frozen end of the seal was checked for each 24-hr period of operation, and measurements of 133 and 132 g were obtained. The test was terminated because of shaft seizure, and the Carboloy sleeve under the seal was found to be cracked.

When pump operation began, the frozen seal apparently established itself ahead of the packing area, but as the test progressed, the frozen zone moved rearward until, after approximately 12 hr , the seal existed in the annulus between the sleeve and the packing gland. However, after an 18 kw power surge, a small amount of heat was placed on the packing and the shaft housing

[redacted]
PHOTO 22753

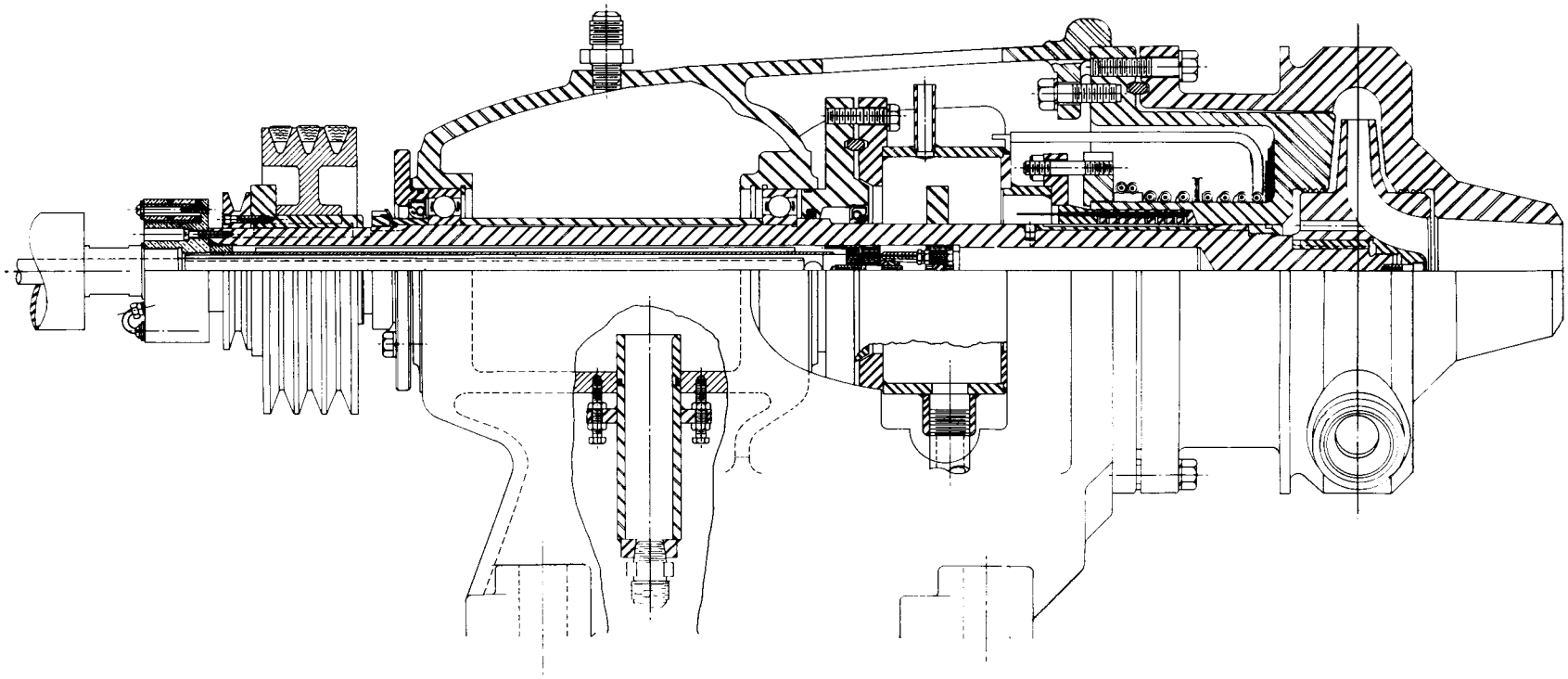

FIGURE 24. ARE SIZE PUMP – MODEL "FCH"

next to the impeller, and no other power surges occurred until the shaft seized. At the time the shaft seizure occurred, all heat had again been off the seal for 30 min.

The Carboloy sleeve was found to have a crack approximately 3/64 in. wide that originated in the corner of a driving notch at the cool end of the sleeve. Subsequent heating and cooling tests on the shaft sleeve assembly alone indicated that a Carboloy sleeve cannot withstand any appreciable axial temperature gradient.

The Carboloy sleeve was replaced with a stainless steel sleeve with Colmonoy hard surfacing. Three different packed-frozen seals were then tested with this pump. The first seal was made up of alternate layers of silicon-bronze wool and graphite powder, the second contained a 1:1 mixture of BeF_2 and graphite powder fused in place under temperature and pressure, and the third was composed of $NaBeF_3$ powder in small annular cavities between close-fitting machined rings placed around the shaft. An inert gas was maintained on the frozen end of the seal and a watercooling sleeve was added.

The first seal operated for a period of 160 hr in circulating fluorides. The fluid temperature was 1250°F, the shaft speed 1250 rpm, the flowrate was 50 gpm, the developed head was 50 psi, and the motor power was 5.7 kw. Heat removed by the water was 5000 Btu/hr. The estimated power absorbed in the seal was 0.8 hp, while the average leakage rate was 100 g per day. The test was terminated because of excessive leakage. Startup was very difficult with the second seal, and excessive heating was required to begin shaft rotation. Gross leakage occurred when the pump loop was filled with the circulating fluid. The third seal arrangement was inoperable because the closely fitting metal rings seized the pump shaft during initial dry runs.

The pump was then modified to incorporate a short, 1/4 in., frozen fluoride seal and is discussed in Sec. II.B.3.

Ref. 10, p. 15; Ref. 11, p. 22 - 92.

IV. STUFFING BOX TYPE PACKED SEAL PUMP

A. Eastern Industries Coolant Pump

The pump driven by a 1/15 hp motor at a shaft speed of 5000 rpm, delivered 5 gpm flow. The pump was operated for approximately 300 hr, pumping 1500°F fluorides. The test was terminated when the 1/8 in. shaft broke at the outside end of the packing gland. It was concluded that since the pump operated for 300 hrs before failure the feasibility of using commercial pumps without extensive modification for pumping high temperature fluids for short periods was demonstrated.

Ref. 6, p. 19.

V. CENTRIFUGAL SEALED PUMP

Pump With a Centrifugal Seal

A plexiglas test model of an in-pile pump with no mechanical liquid seal has been constructed, Fig. 25. The sealing in this pump is accomplished by centrifugal action of the pumped liquid. This is analogous to a sump pump with the gravitational field replaced by a centrifugal field.

The inlet side of the impeller is conventional; however, the back side is extended to form an annular chamber which rotates at pump speed during operation and forms an annulus of liquid with a free surface that never reaches the pump shaft. The annular chamber is pressurized with gas. Since this gas pressure contribues to the absolute pressure throughout the system, it must be such that at no place in the system does the total pressure drop below the vapor pressure of the fluid. The face seal shown in Fig. 25, is a gas seal for retention of the pressurizing gas.

The small radial holes in the annular section of the back of the impeller are designed to permit any gas which might be entrapped due to turbulence between the rotating fluid and the stationary wall of the pump housing to be centrifuged out. Entrapped gas will thus be prevented from entering the main fluid system.

The pump was tested with water as the working fluid and air as the pressurant. The sealing characteristics were very good, and there was no observable pump leakage regardless of pump orientation, even when the pump was inverted. The test also indicated that the loop can be easily filled. A bypass from the pump discharge to the annular chamber at the centrifugal seal removes entrained gas in a short period of operation. Since this pump is not sensitive to its orientation with respect to gravity, it also shows promise as an aircraft type of pump.

UNCLASSIFIED
ORNL-LR-DWG 335

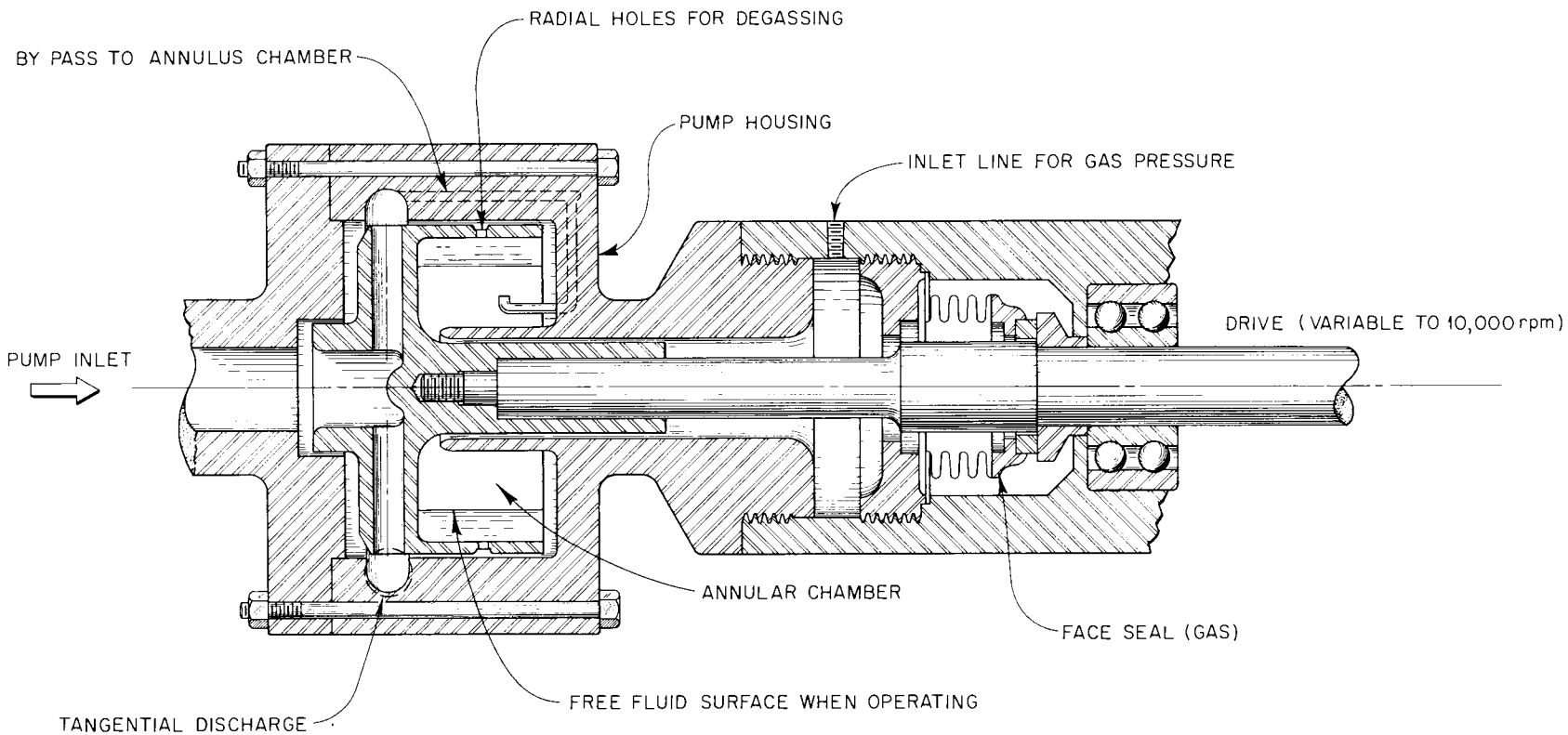

Fig. 25. Centrifugal Seal Pump

Several disadvantages exist with this pump. The pump must be started with the shaft in a vertical position. After the centrifugal field in the annular chamber takes effect the pump may then be rotated to any desired position. A second disadvantage is the fact that if the pump is stopped with the shaft in a horizontal position the pumped fluid will fill the annular chamber and flow into the shaft housing. If this is fluoride or sodium then freezing of the shaft would occur, unless some means is provided for caring for such drainage. The pump inlet pressure is a sensitive function of the radial position of the free surface in the centrifugal field so that there is little expansion space available if this region is to be used as an expansion tank. If a separate expansion tank were used, control of the liquid level would be difficult.

Ref. 13, p. 15-17.

VI. CANNED ROTOR PUMPS

A. Canned Rotor Pump (1 1/2 hp)

The canned rotor pumping system consists of two canned rotors with a centrifugal pump sandwiched in between. Each rotor is part of a 3/4 - hp motor modified so that machined cans having a wall thickness of about 10 mils fit snugly inside the motor stators. The motor armatures are machined to fit inside the cans with 25 mils clearance. When the system is in operation the armatures function as journal bearings and the cans act as bearing sleeves.

A part of the pumped fluid is recirculated to help support the rotating system axially and, by acting as a hydrodynamic lubricant to counteract any small radial loads. The thrust loads are balanced by a combination of the forces produced by (1) the recirculated fluid, (2) the magnetic fields of the motors, and (3) the pump impeller. The recirculated fluid contributes to the overall force that balances the thrust load through the use of a valve at each recirculatory inlet, which may be manipulated so as to produce an upward pressure differential. The magnetic fields of the motors produce forces which tend to center the rotors in their respective magnetic fields. The single entry pump impeller is mounted facing upward. This produces an additional lift on the rotating system. Fig. 26.

The pump was tested, pumping water for a total of 1200 hr. Examination of the pump system after the test failed to indicate any evidence of wear.

The diametral clearance between the motor rotors and motor cans was reduced from .017 to .012 in. The pump was then used to circulate NaK for a total running time of 90 hr. During most of the operating time the temperature was held between 200 and 300°F, although short runs were made at room temperature and also as high as 400°F. No indication of wear or corrosion

[redacted]

X-10 DWG. NO. 11502

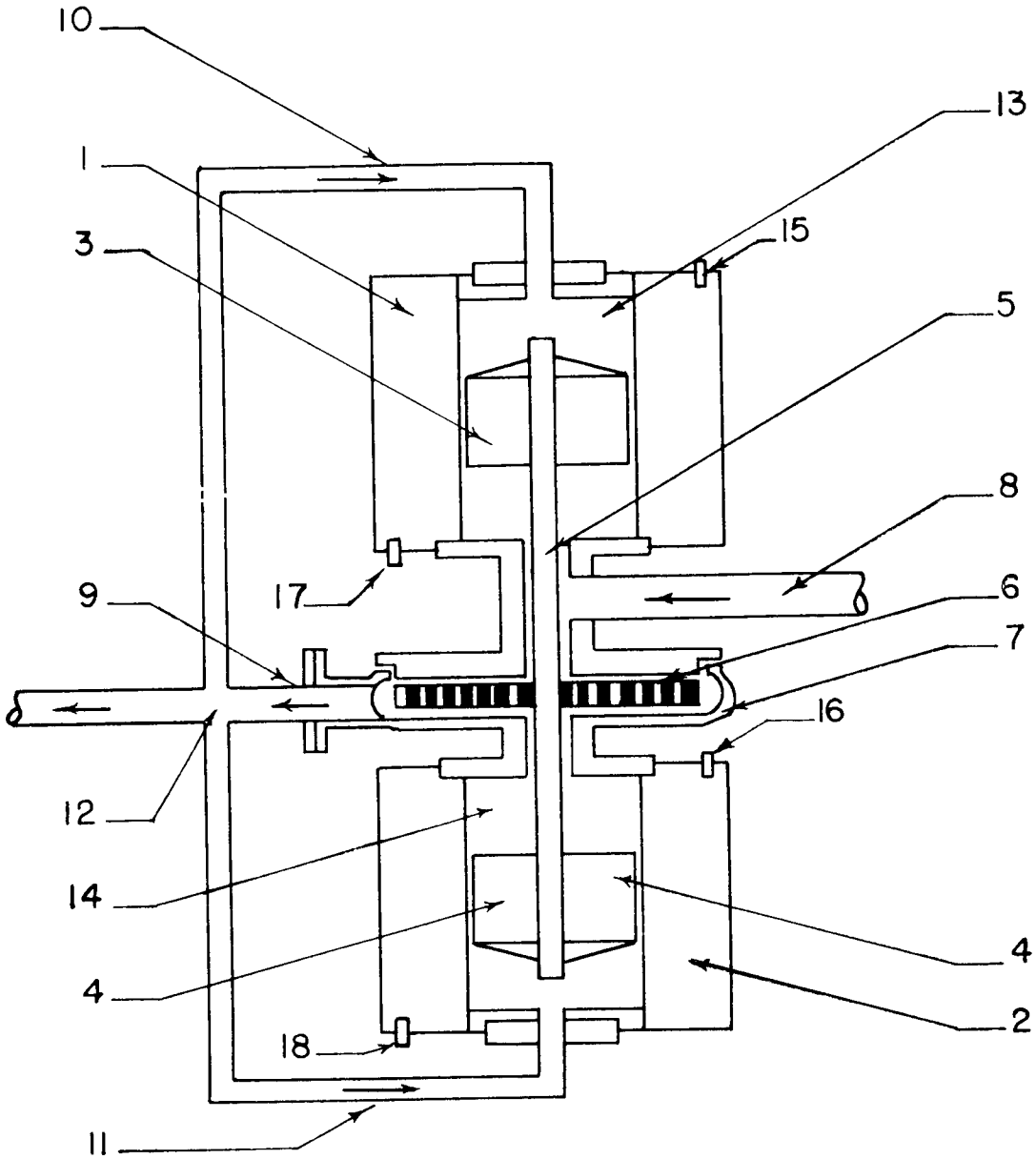

1. UPPER STATOR
2. LOWER STATOR
3. UPPER 'CANNED' ROTOR
4. LOWER 'CANNED' ROTOR
5. SHAFT
6. IMPELLER
7. PUMP HOUSING
8. PUMP SUCTION INLET
9. PUMP DISCHARGE OUTLET
10. UPPER RECIRCULATION INLET
11. LOWER RECIRCULATION INLET
12. JUNCTION
13. UPPER STATOR 'CAN'
14. LOWER STATOR 'CAN'
15. UPPER STATOR COOLANT INLET
16. LOWER STATOR COOLANT INLET
17. UPPER STATOR COOLANT OUTLET
18. LOWER STATOR COOLANT OUTLET

Fig. 26. Schematic Canned Rotor Pump

was found on any of the parts upon dissassembly, but a considerable accumulation of alkali oxides was found at the tabs of the motor cans and close to the walls of the pump volute where the liquid is believed to be relatively stagnant.

The pump was then modified by winding one motor with G. E. Class "H" insulation for 500°F operation and the other motor as received from Allis Chalmers with the standard insulation. The pump was operated in NaK for approximately 8 hrs with fluid temperatures up to 650°F. The test was discontinued when a leak occurred at the discharge flange. The canning on one rotor was torn away due to interference between the rotor and the pump housing.

Due to the inability to obtain high temperature insulation it was decided that this pump would not prove adequate and emphasis was placed on more promising developments.

Ref. 2, p. 172; Ref. 3, p. 17 and Ref. 5, p. 29.

B. Allis-Chalmers Canned Rotor Pump

A 5-gpm canned-rotor pump built by Allis-Chalmers was operated in a test loop in which NaK was pumped. The pump has a hydraulic piston bearing, pressurized by a small impeller at the rear of the pump, which bypasses some of the system fluid through the bearing. The motor windings are made of small diameter copper tubing with fiberglas insulation. The windings are cooled by circulating a coolant through the tubes.

The pump was operated at a maximum temperature of 1085°F. Difficulty was encountered with the impeller binding against the pump housing at temperatures above 1000°F. The pump was designed to operate at 1500°F. The coolant passages through the motor windings showed a tendency to plug during prolonged operation. This plugging was caused by deposits of zinc transported from the galvanized pipe in the distilled water coolant circuit. Replacement of the galvanized pipe with copper pipe corrected this condition.

Pump performance data were taken at various temperatures. The data shown in Fig. 26 was taken at 800°F and is typical of performance at other temperatures. Several attempts to operate the pump at temperatures above 1000°F resulted in impeller binding. The pump, at the request of Allis-Chalmers, was returned for modifications. Presumably development is continuing there.

Ref. 10, p. 15; Ref. 11, p. 23.

FIG. 27 - PERFORMANCE DATA ON THE ALLIS-CHALMERS CANNED ROTOR PUMP

NOTE - NaK @ 800 °F

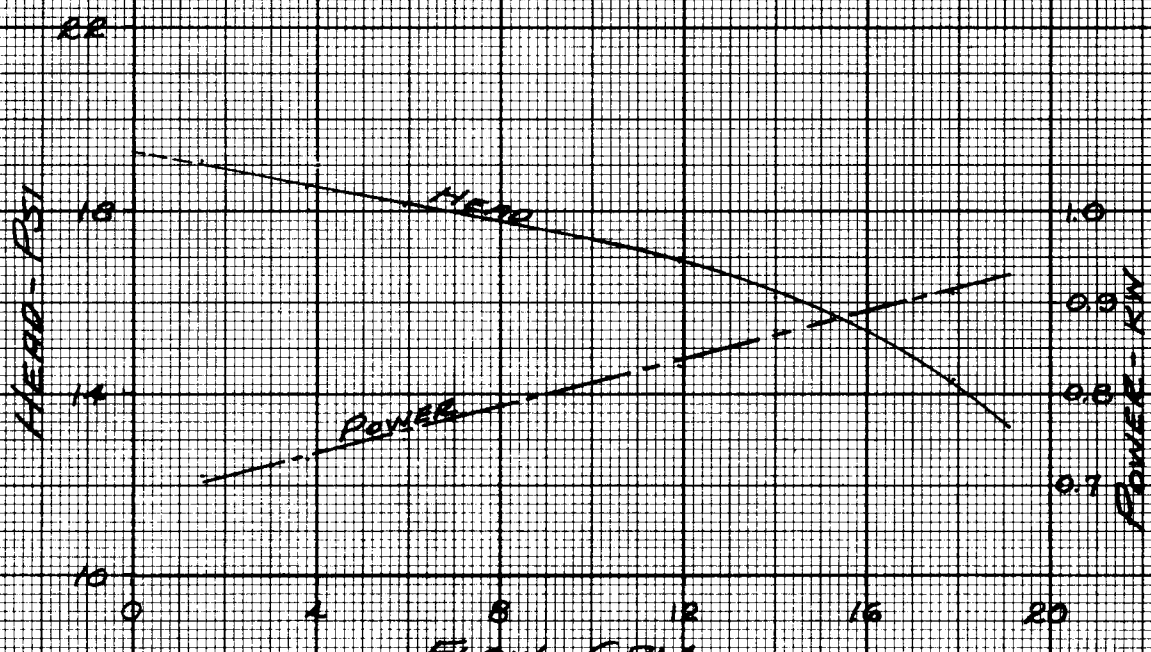

VII. ELECTROMAGNETIC PUMPS

Electromagnetic Pump Development

An electromagnetic pump which was similar to the General Electric G-1 was designed and built for operation in the gifure-8 loops. Initial operation showed that the length of the stainless steel electrode between the wall of the cell and the joint with the copper secondary connector must be held to an absolute minimum to prevent excessive heating with the resultant loosening of the clamped joint. The copper-to-stainless steel weld joint was not satisfactory owing to thermal cracking of the cell wall. Substitution of nickel as the electrode eliminated the weld problem but introduced a higher resistance due to the weld joint. The pump was tested again in a gifure-8 loop but continued efforts to increase the flow rate above approximately 3 gpm resulted in over heating and failure of the joint between the nickel electrodes and the copper secondary connector.

A new cell and pump purchased from General Electric were placed in the loop. This pump had copper electrodes attached to the cell wall with silver brazing metal. No other changes were made at that time, but the pump would not deliver more than approximately 1 gpm. Repeated efforts to increase the flow with this pump resulted in overheating and rupture of the cell wall. The G. E. pump cell was then modified to utilize a flexible secondary conductor. Preliminary tests gave flows of approximately 16 gpm of sodium at 5 psi and 890°F. In a combination performance and endurance test a G. E. type G-3 pump was operated for 173 hr. Performance curves were obtained at temperatures of 300, 500 and 750°F for comparison with data supplied by G. E. The pump failed at 1000°F owing to a current lug melting loose from the cell wall. This failure occurred at 250 volts input but after performance curves had been obtained for that temperature.

A careful appraisal of the details of the G. E. pump cell led some engineers to the conclusion that it should be completely redesigned. Flexible connections of .010 in. thick nickel shim stock were inserted to relieve the stress concentration at the cell wall that resulted in two consecutive failures attended by the worst fires experienced in the ANP experimental program. The redesigned cell gave much higher capacity, and has had a perfect service record, including about 10,000 hr. of testing which included about 4,000 hr. on one pump cell. This unit is described in Ref. 14.

Lack of a-c electromagnetic pumps in the intermediate range of capacities led to theoretical design work to the design of a completely new pump for ARE application, making use of the lessons learned from the successful pump mentioned above. In addition to capacity considerations, efforts were made to improve pump efficiency over currently available models and ultimately to investigate efficiency, pressure and flow rate. Another engineering consideration was reduction of size of the overall pump assembly.

Theoretical design was made for a two-stage pump with a capacity of 120 gpm at 15 psi. This pump, patterned after Mine Safety Applicance pumps, is illustrated schematically in Fig. 29. Design calculations show that currents of the order of 7500 amp at approximately 0.5 volt are required along with a magnetic field strength of about 4 kilogauss. The approximate size of the pump without supporting structure is 30 by 27 in. Since the pump will be used with 1500°F sodium, the material specified for pump cell fabrication is 316 stainless steel. The pump was fabricated but not started immediately.

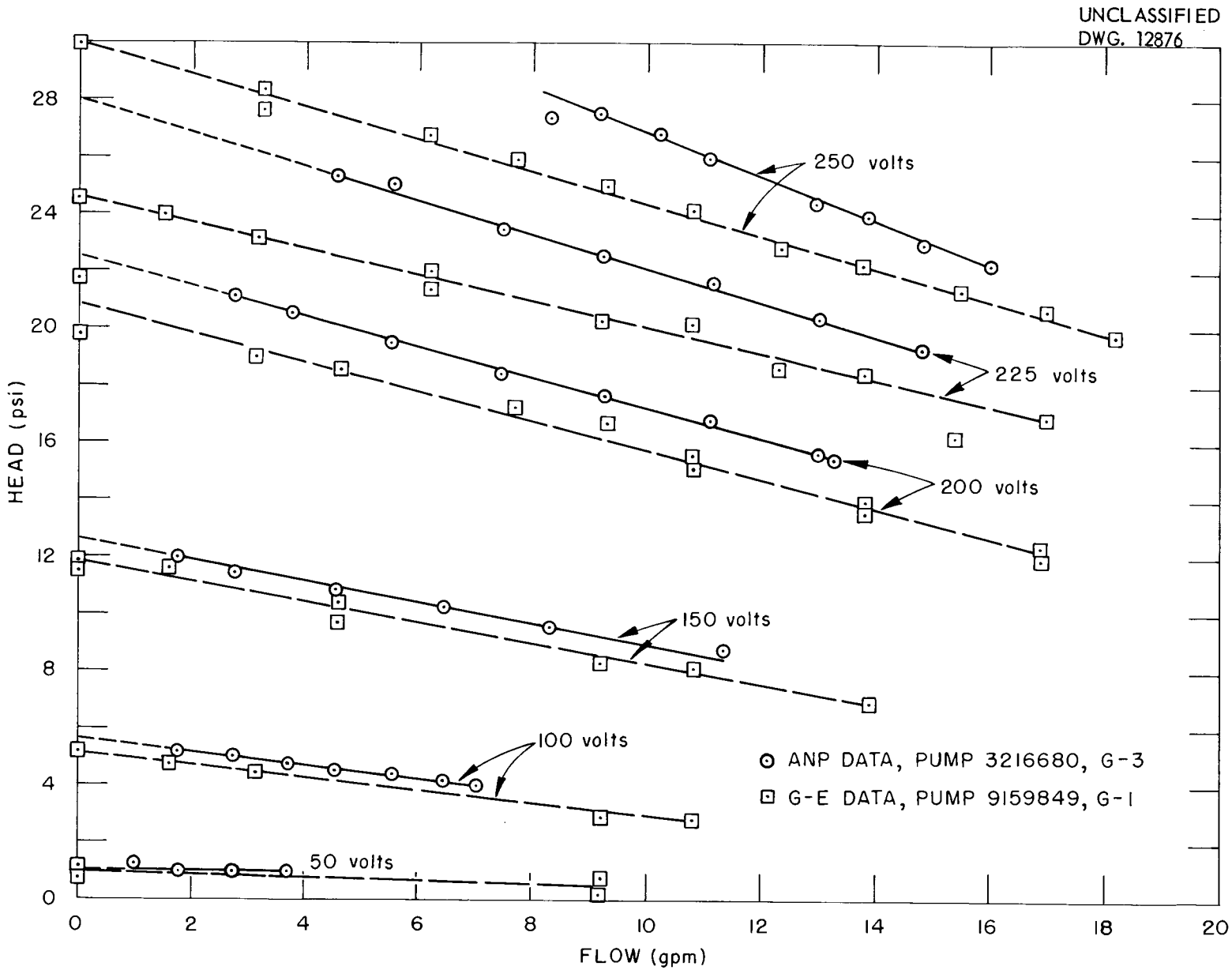

Fig. 28. Comparison of General Electric and ANP Electromagnetic Pump Data (750°F, Sodium)

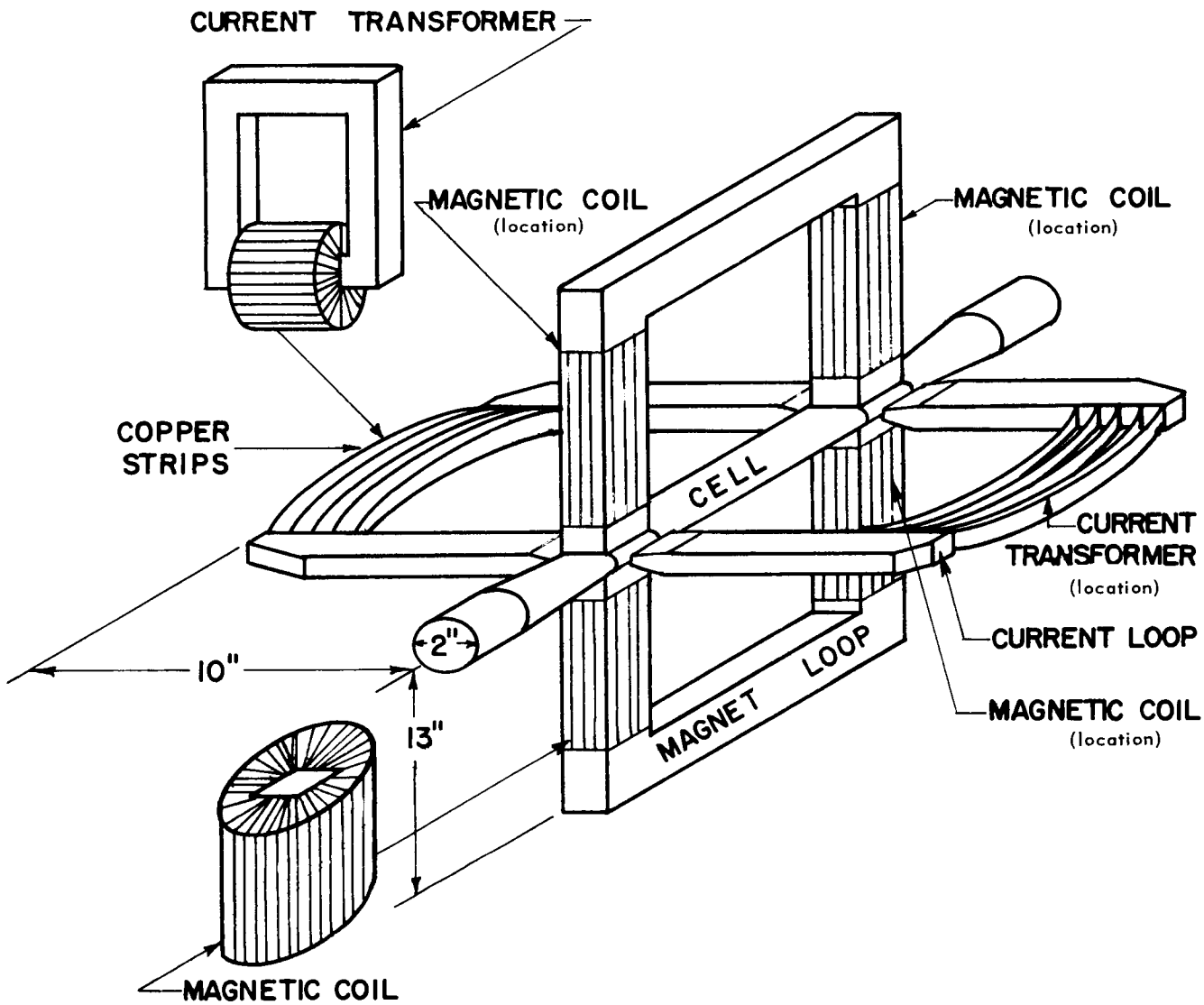

Fig. 29. Schematic of Two-Stage Electromagnetic Pump

During this same period of time a parallel pump cell development program was in progress. Two types of electromagnetic pump cells designed by ANP personnel for high-temperature liquid-metal applications were given preliminary tests. The first of these featured integral construction of the throat and electrodes from 316 stainless steel. The initial tests indicate that severe local overheating occurred. The second cell, employing nickel lugs inserted into the stainless steel pump throat and welded in place with inconel filler, operated satisfactorily for approximately 160 hr, pumping sodium at temperatures up to 1300°F. Test-loop heater limitations prevented raising the sodium temperature above the 1300°F value.

The decision was made that the ARE reactor would be a fused fluoride system rather than a solid fuel element, sodium cooled unit. For this reason development work on E. M. pumps was essentially stopped and emphasis shifted to a centrifugal pump development capable of pumping fluorides.

Approximately a year and half later the two stage E. M. was considered for ARE use to circulate NaK in testing and cleaning operations for the fuel circuit. The pump was tested with NaK at 1500°F. The pump delivery is approximately 90 gpm at approximately 10 psi; performance curves are shown Fig. 30. The pump gave entirely satisfactory performance, except for a hard-soldered joint failure in the current loop, which was easily repaired.

Ref. 1, p. 253 - 254; Ref. 2, p. 168 - 170; Ref. 3, p. 19 - 20; Ref. 4, p. 42 and Ref. 14.

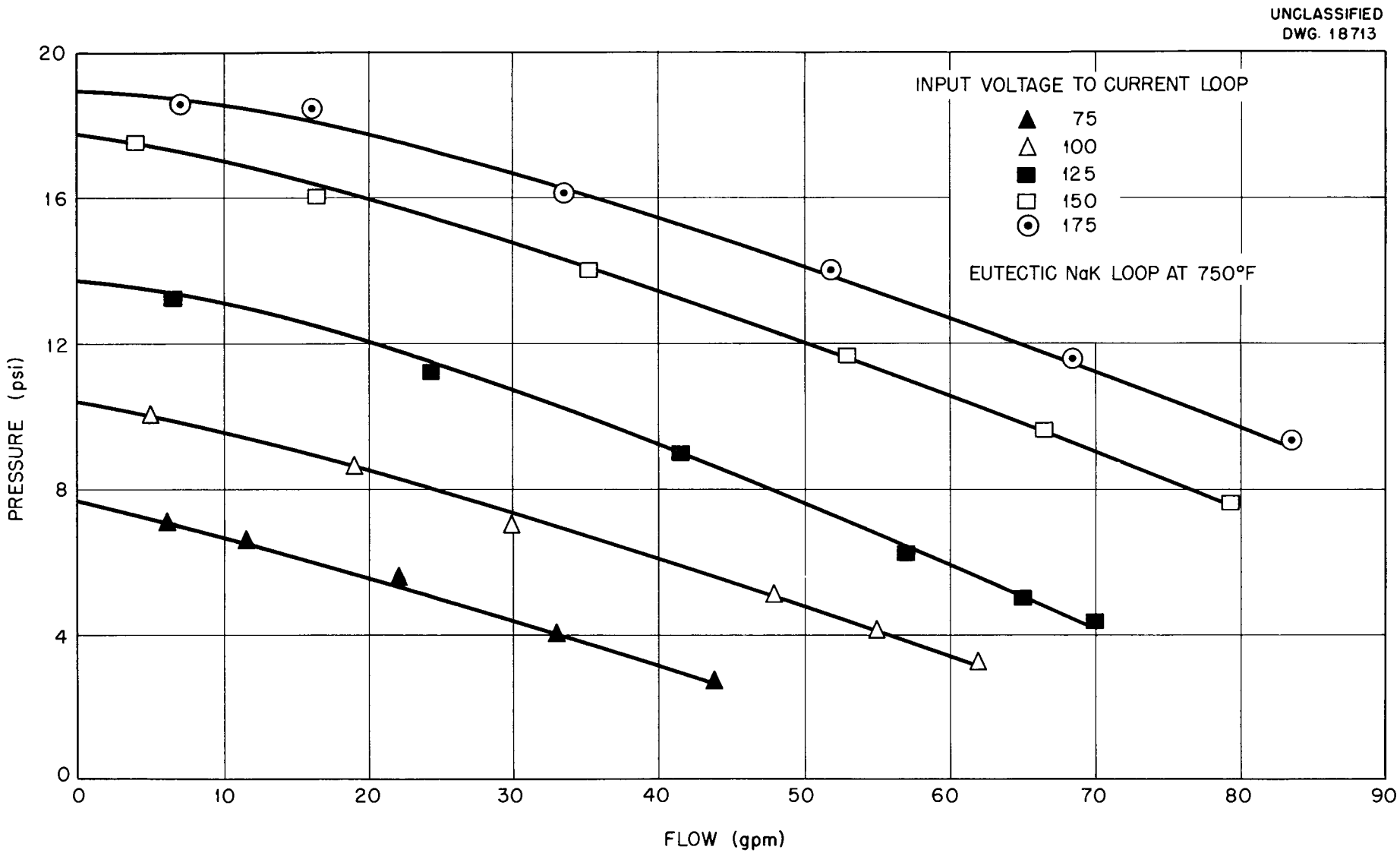

Fig. 30. Performance Curves for Two-Stage Electromagnetic Pump with NaK (Input Voltage to Magnet Loop, 125 Volts)

VIII BIBLIOGRAPHY

Ref. 1	ANP Quarterly	March 10, 1951	ANP 60
Ref. 1	ANP Quarterly	June 10, 1951	ANP 65
Ref. 3	ANP Quarterly	September 10, 1951	ORNL 1154
Ref. 4	ANP Quarterly	December 10, 1951	ORNL 1170
Ref. 5	ANP Quarterly	March 10, 1952	ORNL 1227
Ref. 6	ANP Quarterly	June 10, 1952	ORNL 1294
Ref. 7	ANP Quarterly	September 10, 1952	ORNL 1375
Ref. 8	ANP Quarterly	December 10, 1952	ORNL 1439
Ref. 9	ANP Quarterly	March 10, 1953	ORNL 1515
Ref. 10	ANP Quarterly	June 10, 1953	ORNL 1556
Ref. 11	ANP Quarterly	September 10, 1953	ORNL 1609
Ref. 12	ANP Quarterly	December 10, 1953	ORNL 1649
Ref. 13	ANP Quarterly	March 10, 1954	ORNL 1692

Ref. 14 An Improved AC Electromagnetic Pump Cell, by M. E. LaVerne CF-52-12-153

Ref. 15 Progress Report on S. S. Acid Pump Reworked to Test Special Features for Operation with Liquid Metals, By A. P. Fraas, Y-F15-6