[redacted]

ORNL
MASTER COPY

ORNL 1558
Special

Inv
55

LABORATORY RECORDS
1954

CLASSIFICATION CANCELLED
DATBUL 12 1979 (Doe Review Order)
DECLASSIFICATION OFFICER
OAK RIDGE NATIONAL LABORATORY
AUTHORITY DELEGATED BY ERDA 8-15-77

A DESIGN AND COST ESTIMATE STUDY OF A PUREX PLANT

H. L. Hull
H. R. Zeitlin

DECLASSIFIED
By Authority CE:
AEC 6-30-59
M. Shelley
For: N. L. Bray, Supervisor
Laboratory Records Dept.
ORNL

THIS DOCUMENT WAS PROPERLY DECLASSIFIED
AND IS EXEMPT FROM DOE 1979 REVIEW ORDER
PER DOE LETTER, 10-16-79, R.T. DUFF, OOC

P. S. BAKER, ORNL/CO 12/22/80
INITIALS DATE

OAK RIDGE NATIONAL LABORATORY
OPERATED BY
CARBIDE AND CARBON CHEMICALS COMPANY
A DIVISION OF UNION CARBIDE AND CARBON CORPORATION
UCC
POST OFFICE BOX P
OAK RIDGE, TENNESSEE

[redacted]

[redacted]

ORNL 1558

This document consists of 80 pages.
Copy 27 of 86 copies. Series A.

Contract No. W-7405-eng-26

CHEMICAL TECHNOLOGY DIVISION

Process Design Section

A DESIGN AND COST ESTIMATE STUDY OF A PUREX PLANT

H. L. Hull
H. R. Zeitlin

DATE ISSUED

MAR 15 1954

OAK RIDGE NATIONAL LABORATORY
Operated by
CARBIDE AND CARBON CHEMICALS COMPANY
A Division of Union Carbide and Carbon Corporation
Post Office Box P
Oak Ridge, Tennessee

[redacted]

[redacted]

INTERNAL DISTRIBUTION

1. C. E. Larson
2. A. M. Weinberg
3. C. E. Winters
4. R. B. Briggs
5. J. A. Lane
6. J. A. Swartout
7. J. H. Frye
8. F. L. Culler
9. F. R. Bruce
10. W. K. Eister
11. H. E. Goeller
12. H. K. Jackson
13. R. W. Stoughton
14. H. R. Zeitlin
15-26. Laboratory Records Department
27. Laboratory Records Department, ORNL RC

EXTERNAL DISTRIBUTION

28-30. AEC, Washington
31-38. Argonne National Laboratory
39-41. Brookhaven National Laboratory
42-43. Carbide & Carbon Chemicals Company (Y-12)
44. Chicago Patent Group
45-50. DuPont, Augusta
51. DuPont
52-55. General Electric Co., Richland
56. Hanford Operations Office
57-60. Knolls Atomic Power Laboratory
61-62. Los Alamos Scientific Laboratory
63. MIT (Benedict)
64-78. Technical Information Service
79. Chicago Operations Office
80-83. Phillips Petroleum Company
84-85. North American Aviation, Inc.
86. California Research & Development Co.

[redacted]

[redacted]

TABLE OF CONTENTS

		Page
0.0	Abstract	1
1.0	Introduction	2
2.0	Summary	3
3.0	Plant Design and Description	5
3.1	Design Philosophy	5
3.2	Design Basis	5
3.3	Process Flowsheets	5
3.4	Building Design	7
4.0	Cost Study	
4.1	Methods of Cost Estimating	10
4.2	Cost Summaries	10
4.3	Cost Per Process Operation	14
4.4	Cost Per Gram of Plutonium	17
4.5	Unit Cost of Plutonium as a Function of Processing Rate	17
4.6	Process Building Cost	18
4.7	Future Cost Reductions	20
5.0	Acknowledgment	21
6.0	Appendix 1: Design Notes	22
6.1	Design Criteria	22
6.2	Process Flowsheet Notes	22
6.3	Reworking Procedures	28
6.4	Building Design Notes	30
7.0	Appendix 2: Cost Estimating Techniques	44
8.0	Appendix 3: Breakdowns of Summary Tables	47

FIGURES

Fig. 3-1	Diagram of Process and Laboratory Buildings	8
Fig. 3-2	Process and Laboratory Buildings Cross Sectional View	9
Fig. 4-1	Breakdown of Annual Cost	13
Fig. 4-2	Breakdown of Plant and Equipment Investment	13
Fig. 4-3	Breakdown of Operating Costs	13

[redacted]

[redacted]

		Page
Fig. 4-4	Process Building Cells - Plan View	15
Fig. 4-5	Cost Per Process Operation	16
Fig. 4-6	Effect of Processing Rate on Unit Cost of Plutonium for Plant Having Nominal Capacity of Three Metric Tons Per Day	19
Fig. 6-1	Cutaway of R.R. Tunnel and Slug Charging Facilities	23
Fig. 6-2	Cell Building	31
Flowsheet 1	Dissolution and Feed Preparation	32
Flowsheet 2	First Extraction Cycle	33
Flowsheet 3	Second Uranium Cycle	34
Flowsheet 4	Tail-End Treatment	35
Flowsheet 5	Second Plutonium Cycle	36
Flowsheet 6	Plutonium Isolation	37
Flowsheet 7	Acid-Recovery Evaporation	38
Flowsheet 8	Acid-Recovery Distillation	39
Flowsheet 9	Solvent Recovery	40
Flowsheet 10	RAGS Process	41
Flowsheet 11	Rerun	42
Flowsheet 12	Underground Waste Storage	43

[redacted]

[redacted]

[redacted]

0.0 ABSTRACT

The preliminary design and cost study of a hypothetical Purex plant sized to process 3 metric tons of irradiated natural uranium per day and designed for direct maintenance are reported.

[redacted]

[redacted]

1.0 INTRODUCTION

The cost of chemically processing spent reactor fuel constitutes a significant portion of the total cost of plutonium. Studies of the Long Range Reactor Planning Group at Oak Ridge National Laboratory indicate that the chemical processing cost is one of the controlling factors in the industrial application of atomic energy. As a consequence, development of a less costly technology for radiochemical processing is important in a program for development of economically competitive nuclear power.

In an effort to develop new methods and philosophies of design which will lead to reductions in cost, a program has been undertaken at Oak Ridge National Laboratory[a] to accumulate, analyze, and apply basic chemical processing cost data, and to bring the findings of this investigation to bear upon future process development and chemical plant construction programs. This Purex cost study is one phase of the overall program and has as its purposes

1. To emphasize the major cost variables in radiochemical processing as an aid in developing methods and philosophies leading to lower costs.

2. To provide a basis for determining the advantages and disadvantages of new processes and processing alternates.

3. To develop techniques of radiochemical cost estimating.

An effort has been made in this study to design a low-cost chemical processing plant based on the optimum solvent extraction process, Purex, as developed through the pilot plant stage at Oak Ridge National Laboratory, and on a plant design philosophy, direct maintenance, presently being tested at the Idaho Chemical Processing Plant. The cost of this plant is less than that of any equivalent plant in existence or planned to be built. This cost is one which can be used as a standard with which to compare the cost of new processes and processing alternates, and/or the cost of plants incorporating other methods of maintaining and biologically shielding radioactive equipment.

(a) F. L. Culler, "Program for Economic Analysis of Radiochemical Plant Design," ORNL CF-52-2-134 (Feb. 16, 1952).

2.0 SUMMARY

A directly maintained plant designed to process 3 metric tons of uranium per day, assumed to have been irradiated to give 550 g of plutonium per metric ton of uranium and cooled 120 days, and to have as products a concentrated aqueous uranyl nitrate solution and a concentrated aqueous plutonium nitrate solution, is estimated to have a fixed investment cost of $32,170,000 and an annual operating cost of $3,320,000. The cost of radiochemical processing when amortizing the plant in 6-2/3 years and employing a 16% SF inventory charge and a 2% cost-of-money charge at a processing rate of 3 metric tons per day is

Total (including SF inventory charges)	$25.8 per gram of plutonium
Fixed investment, operating, and working capital costs only	$14.1 per gram of plutonium
Operating costs only	$ 5.5 per gram of plutonium

The cost estimate includes the cost of all process, laboratory, waste handling, maintenance, administrative, and general site facilities required for a self-contained plant.

The most costly processing operations, in order of decreasing cost, are (1) dissolving and feed preparation, (2) waste handling, (3) acid recovery, (4) solvent recovery, (5) first extraction cycle, and (6) second uranium cycle.

An approximate $3 million savings in plant cost is obtained by incorporating a unique design in the liquid-waste storage facilities which reduces the required storage capacity. A fourfold reduction in stored wastes is accomplished by using the fission product heat to boil and self-concentrate the process wastes in the underground storage tanks, an operation presently being investigated at Hanford.

The flowsheet employed in the design, the Purex flowsheet, is basically that developed at ORNL, and consists of

1. A batchwise dissolution of slugs and preparation of solvent extraction feed. (There is no head-end treatment.) Dissolver off-gas is treated to recover the oxides of nitrogen as 55% HNO_3.

2. Continuous solvent extraction consisting of a common first cycle and a second cycle each for plutonium and uranium.

3. A continuous silica gel adsorption tail-end treatment.

4. A semicontinuous ion exchange plutonium isolation.

5. Semicontinuous recovery of approximately 92% of the process nitric acid as 55% acid through two stages of evaporation.

6. Continuous recovery of the process solvent.

3.0 PLANT DESIGN AND DESCRIPTION

3.1 Design Philosophy

In order to arrive at a low-cost Purex plant, the following design principles were generally followed: (1) direct maintenance, (2) continuous flow, and (3) fixed process and plant capacity (i.e., no increase or decrease in plant capacity contemplated).

3.2 Design Basis

The plant is designed to process 3 metric tons of uranium per day. The feed is assumed to have been irradiated to give 550 g of plutonium per metric ton of uranium and cooled long enough for the average cooling time of the product to be 120 days.

The products are an aqueous plutonium nitrate solution containing 60 g of plutonium per liter, as finally isolated by ion exchange, and a concentrated uranyl nitrate solution. (For process and building design criteria see Appendix 1.)

3.3 Process Flowsheets (See Appendix 1)

3.3.1 Dissolving and Feed Preparation (Flowsheet 1). Material is handled in batches for dissolving and solvent extraction feed preparation. Dissolver off-gas is processed to remove iodine and particulate matter and to recover oxides of nitrogen, with addition of the RAGS[a] process optional. No head-end treatment is used, but solvent extraction feed is centrifuged.

3.3.2 Solvent Extraction (Flowsheets 2, 3, and 5). The ORNL Purex No. 3 Flowsheet is used for solvent extraction in pulse columns with the following exceptions:

1. The IIBX is halved.
2. The uranium concentration of the IDF is 340 g/liter.[b]
3. The second uranium cycle flow ratios and acid concentrations are the same as for the first cycle.

(a) Radioactive Gas Separation (See Flowsheet 10).
(b) Since fixing of the flowsheet, a concentration of 320 g of uranium per liter in the IDF has been found more desirable.

Feed to and processing through the solvent extraction and attendant coupling operations is continuous, the concentrated IEU (uranium-bearing stream) being collected and batch-transferred to a "cold" area for a tail-end treatment, and the IIBP flowing continuously from the IIB column through an activity monitor to a "cold" ion exchange isolation step.

3.3.3 Tail-End Treatment (Flowsheet 4). The "cold" uranyl nitrate solution is fed continuously to a silica gel column for further decontamination of zirconium and niobium; it is then collected in batches for transfer to a denitration plant.

3.3.4 Plutonium Isolation by Ion Exchange (Flowsheet 6). The IIBP flows continuously through a filter and one of a series of resin columns in which the plutonium is sorbed; it is then eluted and stored for shipment to metallurgy.

3.3.5 Acid Recovery (Flowsheets 7 and 8). Recovery of approximately 92% of the process nitric acid is achieved by semicontinuously evaporating through two stages the combined IAW, IDW, and IIAW aqueous waste streams and batch-transferring the collected condensate (dilute acid) to a "cold" distillation system for concentration. The still bottoms, 55% HNO_3, are stored and reused for chemical solution makeup.

3.3.6 Solvent Recovery (Flowsheet 9). Solvent recovery is achieved by subjecting the IEW and the combined ICW and IIBW, in two separate similar systems, to a sodium carbonate wash in a pulse column, a centrifugation, and a dilute nitric acid wash in a spray column.

3.3.7 Waste Storage (Flowsheet 12). All wastes to be stored are batch-analyzed and transferred to underground waste storage tanks. The contents of these tanks, with the exception of the laboratory and laundry waste storage tanks, will boil as a result of fission product heat evolution. The vapors are condensed and removed to allow self-concentration of the salt wastes, thus effecting an approximate fourfold reduction in stored wastes. Demonstration of the feasibility of such an operation is being performed at Hanford.[a]

3.3.8 Rerun (Flowsheet 11). Rerun facilities are provided for batchwise chemical treatment, centrifugation, and separation of organic and aqueous phases of any material requiring such treatment. Underground process solution hold tanks are provided for additional temporary storage capacity.

(a) R. E. Tomlinson and F. W. Woodfield, "Preliminary Specifications for Storage Facilities for Purex Salt Wastes," HW-25274 (Aug. 4, 1952).

3.4 Building Design

3.4.1 Process Building. The process building (see Figs. 3-1 and 3-2) consists of a single row of nine processing cells with the attendant galleries, tunnels, and corridors running the length of the building. Facilities for unloading slug-carrying railroad flatcars are located at one end of the building. The sample gallery and lower level of the laboratory building are integrated to facilitate transfer of radioactive samples. The chemical solution makeup and head tank area is located above the gallery and cell roofs and is enclosed in a steel and transite shed.

3.4.2 Laboratory Building and Plutonium Isolation Facilities. The laboratory building (see Figs. 3-1 and 3-2) is a two-story structure running the length of the processing building and containing analytical and plant assistance laboratories, maintenance shops, stores, offices, and personnel facilities.

The plutonium isolation facilities enclosure, designed as a subbasement to a small fraction of the laboratory building adjacent to the process building, consists of an upper-level solution makeup area and a lower-level ion exchange laboratory.

DWG. 19016
UNCLASSIFIED

FIG. 3-1
DIAGRAM OF
PROCESS AND LABORATORY BUILDINGS

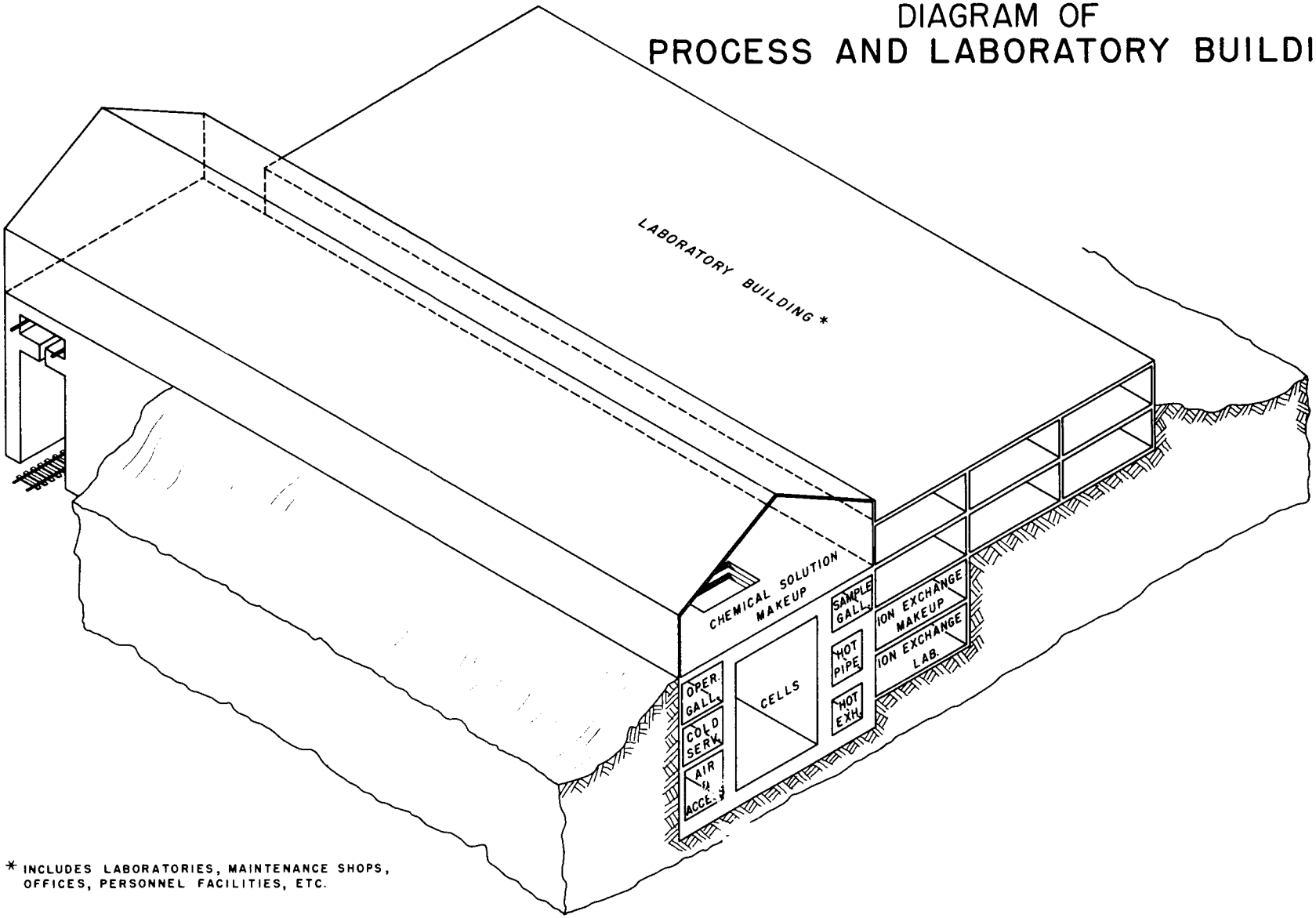

* INCLUDES LABORATORIES, MAINTENANCE SHOPS, OFFICES, PERSONNEL FACILITIES, ETC.

DWG. 19015
UNCLASSIFIED

FIG. 3-2

PROCESS AND LABORATORY BUILDINGS

CROSS SECTIONAL VIEW

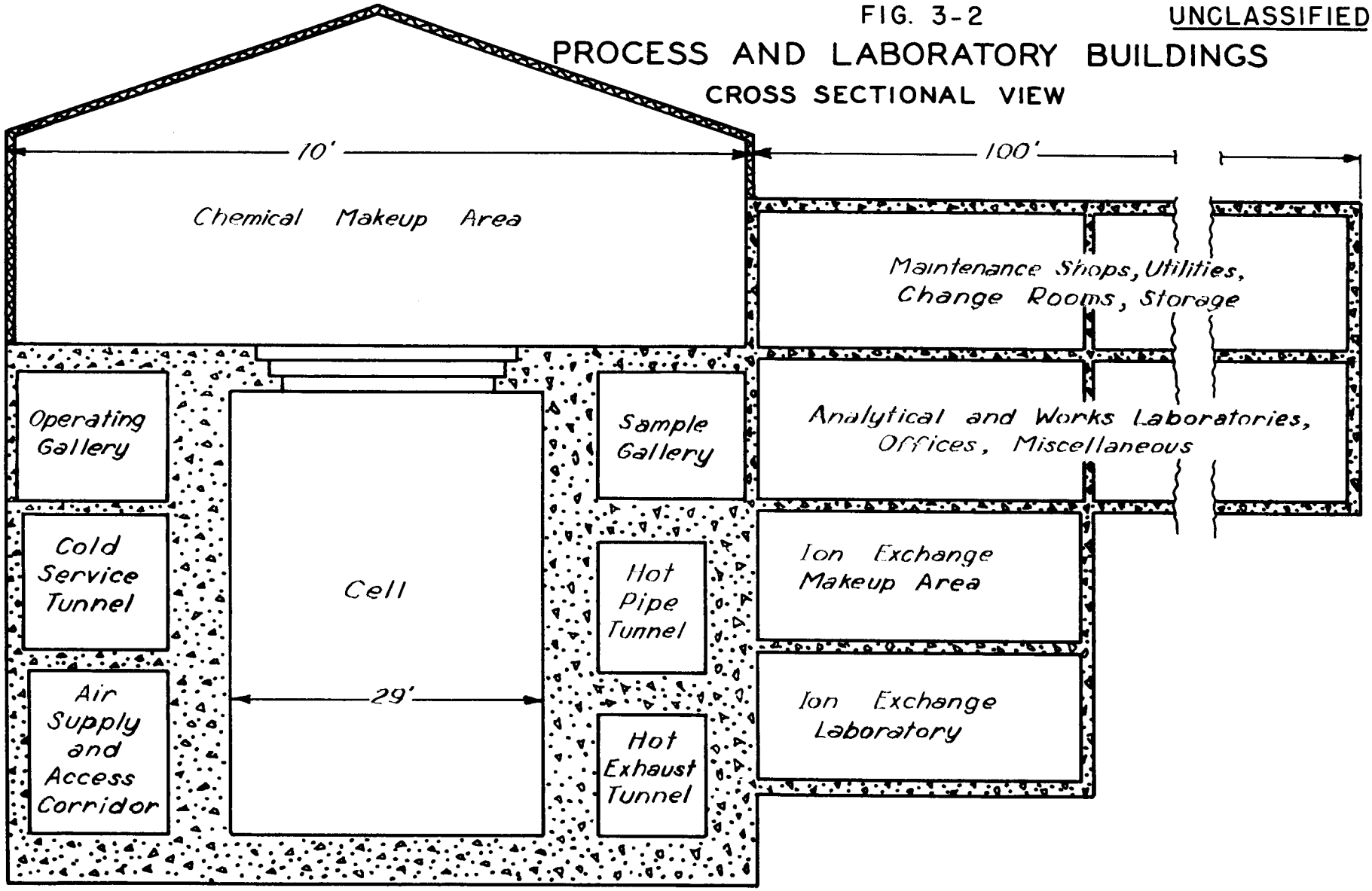

4.0 COST STUDY

4.1 Methods of Cost Estimating

Cost estimates were obtained by: (1) direct estimation of required materials and labor, (2) application of a factor to some basic cost, and (3) application of a unit cost to a calculated number of units. To illustrate, the first method, the most accurate, was used to obtain basic equipment costs; the second method was used in determining piping costs; and the third method was employed in obtaining building costs.

Sources of and justification for the factors and unit costs used are embodied in the detailed estimate in Appendix 3. Estimates are based on an Engineering News Record construction cost index of 600.

4.2 Cost Summaries

4.2.1 Annual Cost Summary (See Fig. 4-1)

Cost	$	$ per gram of plutonium [a]
Fixed investment[b]	5,169,000	8.6
Operating cost	3,320,000	5.5
Working capital[c]	6,900	0.01
SF inventory[d]	7,056,000	11.7
Total	15,551,900	25.8

(a) All costs charged to plutonium.
(b) Fixed investment charged at 16%; F.I. = 0.16 x $32,303,815.
(c) Working capital charged at 2%; working capital = 0.02 x $344,800.
(d) Inventory charged at 16%; SF inventory = 0.16 x $44,100,000.

4.2.2 Fixed Investment Summary (See Fig. 4-2)

Manufacturing facilities	$14,720,264	
Power facilities	1,500,000	
Site development and general facilities	2,200,000	
Subtotal	$18,420,264	
Engineering and design, 15% subtotal[a]	2,763,040	
Construction (supervision, insurance, taxes, overtime, etc.), 20% subtotal[a]	3,684,053	
Contractor's fee or profit, 2% subtotal	368,405	
Contingency, 20% subtotal	3,684,053	
Preoperational and startup[b]	3,000,000	
Total	$31,919,815	
Land, 4 sq miles or 2560 acres at $150 per acre [c]	384,000	
Total fixed investment		$32,303,815
Part of RAGS investment[d] required for rare gas removal: $1,050,275 - $180,000(1.15)(1.57)[e]	725,286	
Total fixed investment with RAGS		$33,029,101

(a) Based on ICPP (Idaho Chemical Processing Plant) costs.
(b) Preoperation costs for ICPP were $2,728,000 as of October, 1952, and the preoperation charge account was not closed until May 1, 1953.
(c) Cost of land will vary considerably with location.
(d) ORNL-1410, p. 49.
(e) The term subtracted allows for the investment for recovery of oxides of nitrogen which has already been included in the plant and equipment investment. The value 1.15 is a factor for adding costs of site development and general facilities, and the value 1.57 is a factor for adding costs of engineering, design, construction, fees, and contingency.

4.2.3 Operating Cost Summary (See Fig. 4-3)

Raw materials	$ 400,000	
Labor and supervision (including overhead)	1,498,000	
Operating supplies	54,000	
Electricity	35,000	
Steam	474,000	
Water	164,000	
Compressed air	13,000	
Analytical	528,000	
Maintenance material	154,000	
Total		$3,320,000
RAGS	416,700	
Total with RAGS		$3,736,700

4.2.4 Working Capital Summary

Materials and supplies[a]	$ 37,800	
Material in process	30,000	
Cash and miscellaneous items[b]	277,000	
Total		$ 344,800

4.2.5 SF Inventory Summary

Uranium and plutonium	$44,100,000

(a) Semifinished and finished product charged to SF inventory.
(b) No accounts receivable for AEC contract.

DWG. 19781

[redacted]

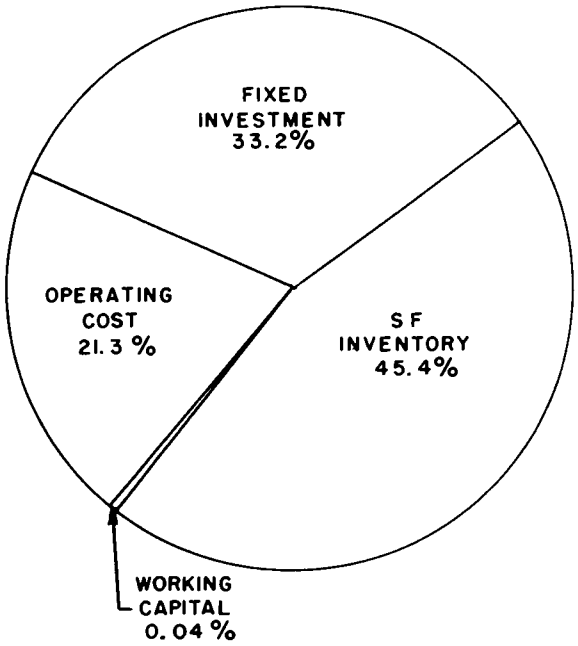

FIG. 4-1
BREAKDOWN OF ANNUAL COST
TOTAL: $ 15,551,900

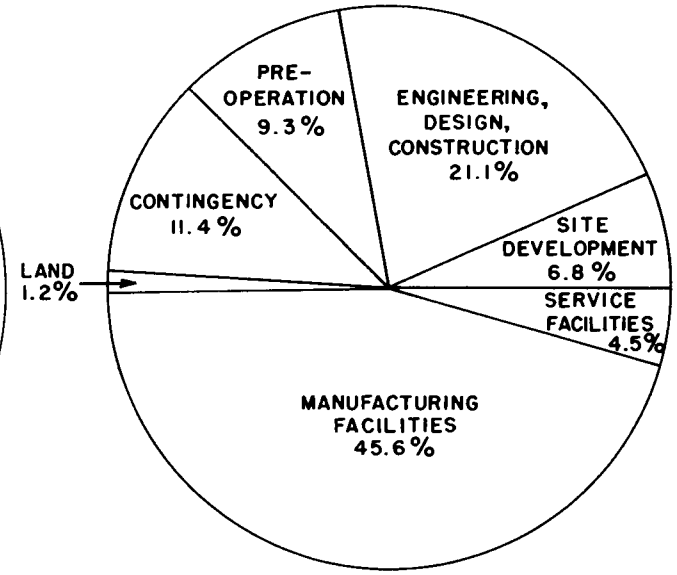

FIG. 4-2
BREAKDOWN OF PLANT AND
EQUIPMENT INVESTMENT
TOTAL: $ 32,304,000

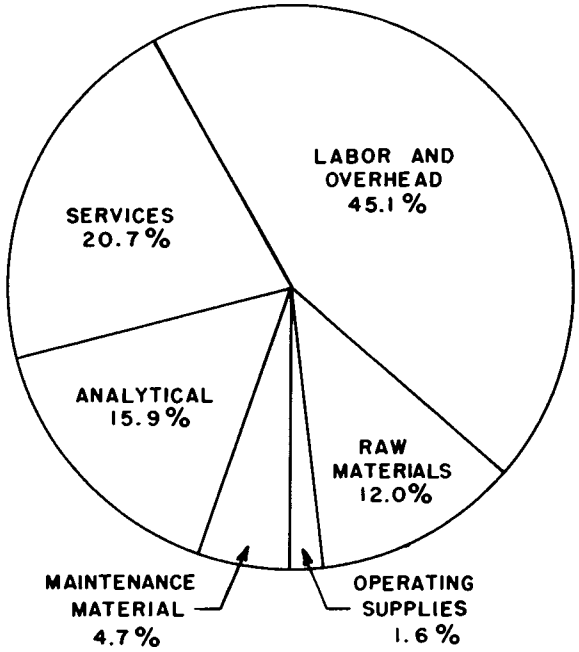

FIG. 4-3
BREAKDOWN OF OPERATING COSTS
TOTAL: $ 3,320,000

4.3 Cost Per Process Operation

By apportioning the total cost of the process building, as indicated in Fig. 4-4[a] and properly allocating the equipment costs, the following table was developed:

Operation	Cost
Dissolving	$ 1,148,000
Feed preparation	1,503,000
First solvent extraction cycle	1,119,000
Second plutonium cycle	293,000
Second uranium cycle	938,000
Tail-end treatment	173,000
Plutonium isolation	287,000
Acid recovery	1,690,000
Solvent recovery	1,589,000
Rerun	676,000
Waste handling	1,961,000
Slug charging	312,000
Miscellaneous (chemical makeup, elevator, unit shielding, process water and demineralization systems, cranes, etc.)	399,000
Raw material storage	403,000
Process liquid storage	124,000
Laboratory	1,980,000
Miscellaneous decontamination and disposal facilities	125,000
	$14,720,000

These costs are represented graphically in Fig. 4-5.

(a) Based on square feet of cell space with the following adjustment: a 25% reduction in the building cost made to Slug Charging since no galleries or tunnels extend along the railroad tunnel portion of the building. This reduction was proportionately allocated to the various process building cells.

DWG. 19185
UNCLASSIFIED

FIG. 4-4
PROCESS BUILDING CELLS - PLAN VIEW*

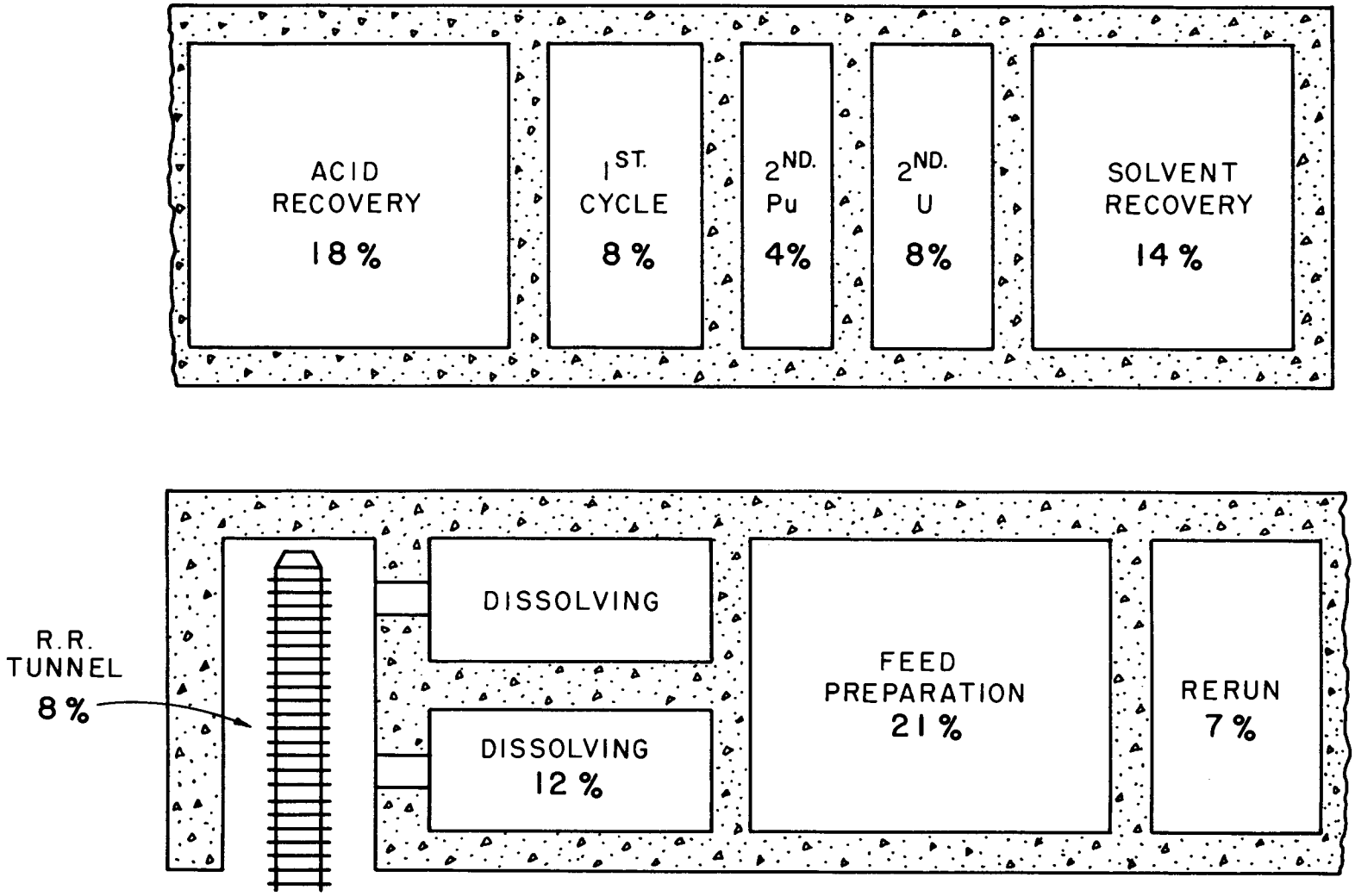

* PERCENTAGE FIGURES REPRESENT THE PERCENTAGE OF THE TOTAL PROCESS BUILDING CELL FLOOR AREA.

DWG. 19186R.1
UNCLASSIFIED

FIG. 4-5

COST PER PROCESS OPERATION

TOTAL MANUFACTURING FACILITIES COST $14,720,000

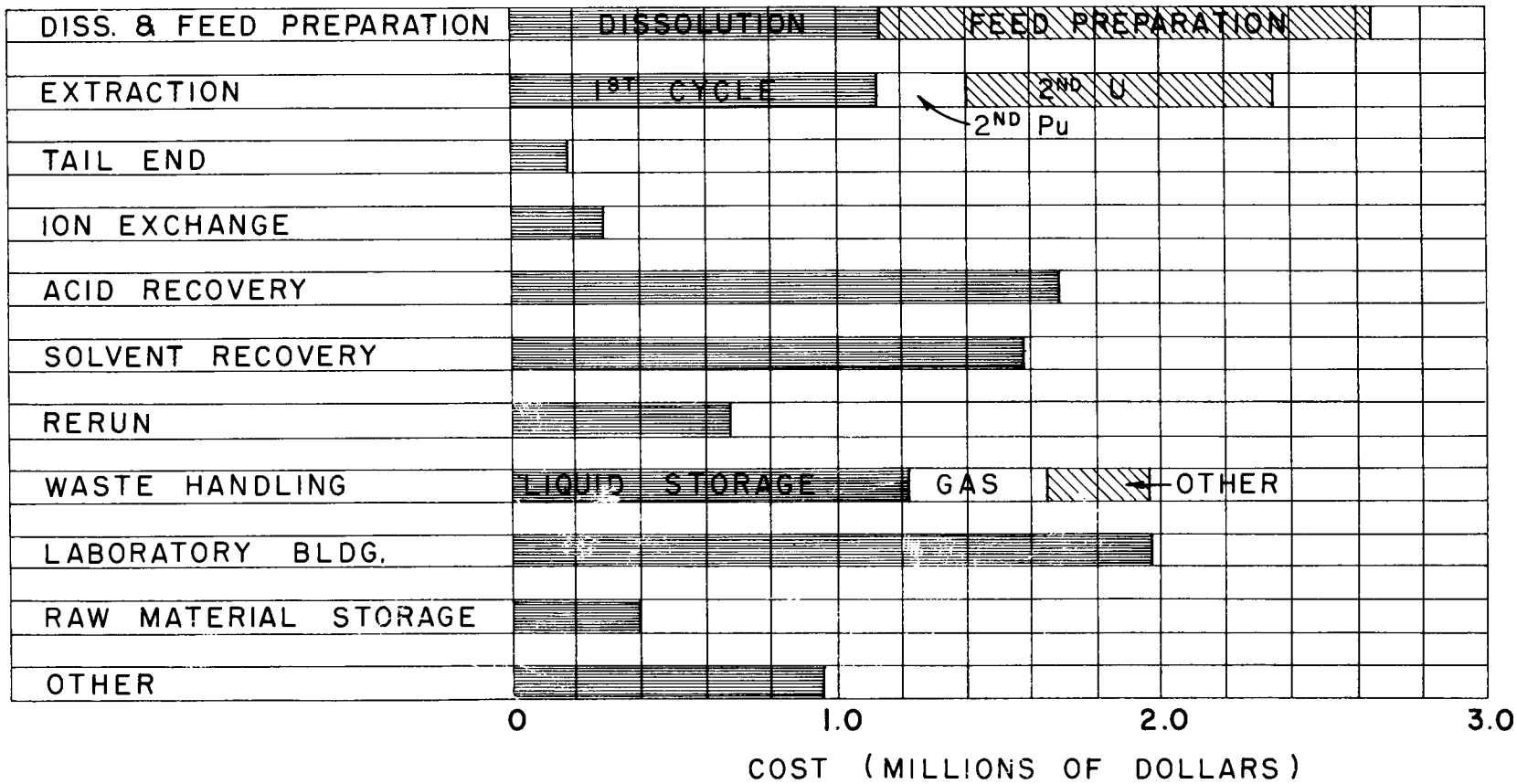

4.4 Cost Per Gram of Plutonium

The cost of chemically processing spent reactor fuel to obtain plutonium, when allocated entirely to the plutonium produced, may be expressed in three significant ways as follows:

(1) Total annual cost = 16% of fixed investment + annual operating costs + 2% of working capital + 16% of SF inventory = $25.8 per gram of plutonium.[a]

(2) Total annual cost less SF inventory cost = $14.1 per gram of plutonium.[a]

(3) Total cost less investment and SF inventory cost = $5.5 per gram of plutonium.[a]

This cost represents operating costs and working capital and is the cost[b] of chemical processing after the fixed investment has been completely amortized (i.e., in the case of this study, after the plant has been in operation for 6-2/3 years).

4.5 Unit Cost of Plutonium as a Function of Processing Rate

In the tabulation below are presented the unit costs of plutonium at various processing rates in a plant having an assumed nominal capacity of 3 metric tons per day. The maximum capacity of the plant is 4.3 metric tons per day, a limit set by the acid recovery and solvent extraction facilities. For a detailed summary of operating costs, see p. 76 in Appendix 3. These results are shown graphically in Fig. 4-6.

(a) This is the cost at a processing rate of 3 metric tons of uranium per day. See Fig. 4-6 for costs at other processing rates.

(b) This cost does not include inventory charges.

Processing rate (metric tons/day)	1	2	3	4.3
Plutonium production (kg/year)	201	402	602	863
Cost per gram of plutonium:				
Fixed investment	$25.6	$12.8	$ 8.6	$ 6.0
Operating costs	12.4	7.2	5.5	4.5
Working capital	0.02	0.01	0.01	0.009
SF inventory	11.7	11.7	11.7	11.7
Total	$49.7	$31.7	$25.8	$22.2
Annual cost (in thousands):				
Fixed investment	$ 5,148	$ 5,148	$ 5,148	$ 5,148
Operating costs	2,499	2,900	3,320	3,926
Working capital	5	6	7	8
SF inventory	2,352	4,704	7,056	10,114
Total	$10,004	$12,758	$15,531	$19,196

4.6 Process Building Cost

This study indicates that the building cost of a direct maintenance plant is approximately equal to the combined cost of equipment, piping, and instrumentation. Similar findings have been obtained in another cost study of a direct maintenance plant processing enriched uranium reported by the American Cyanamid Company.*

(a) F. A. Hall et al., "Projection of Capital and Operating Costs for Uranium-235 Recovery Plants," IDO-14062-ACCO (ACCO-2807) (May 16, 1952).

DWG. 19782
[redacted]

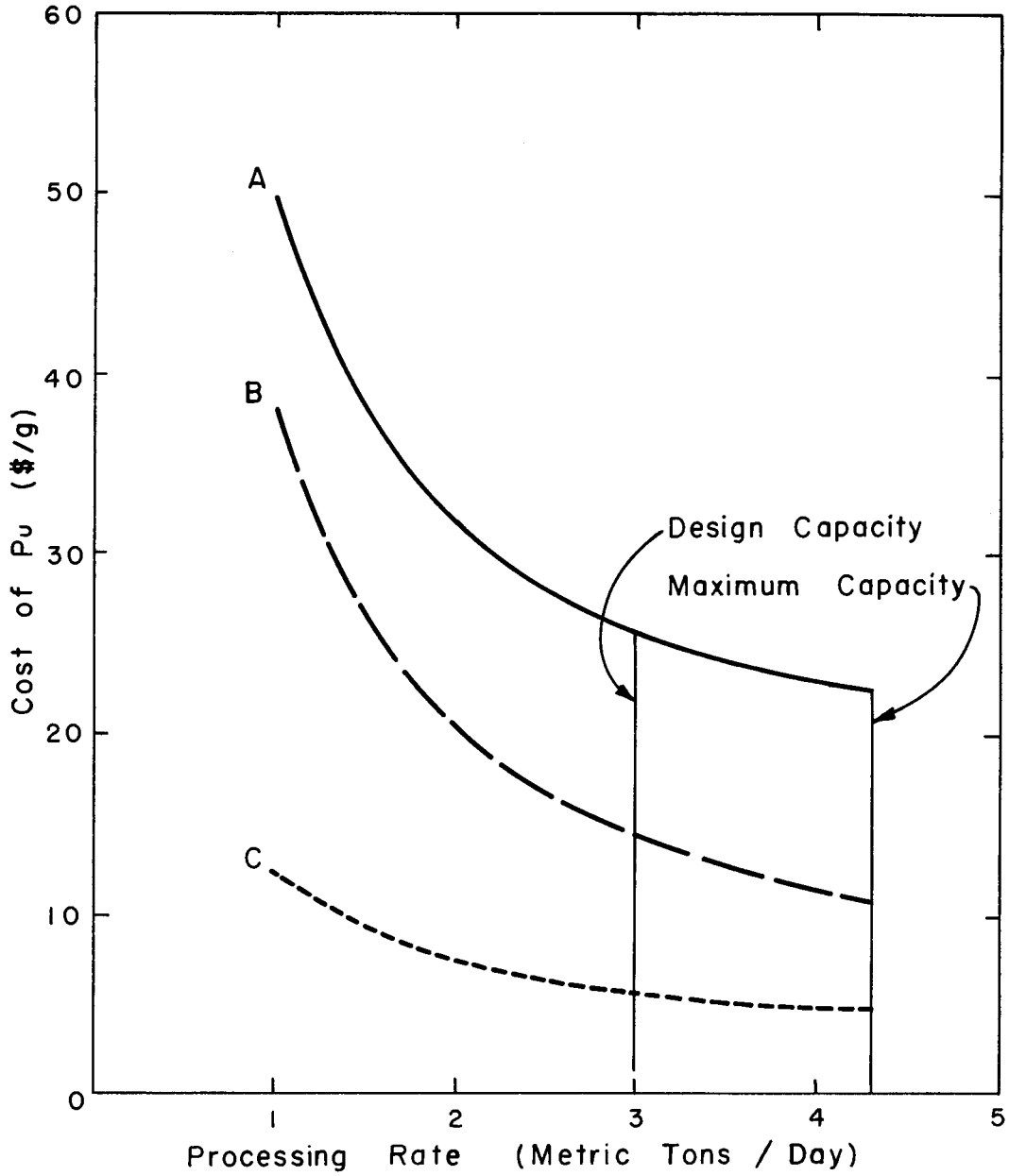

Curve A, total cost; curve B, investment plus operating cost; curve C, operating cost.

FIG. 4-6

EFFECT OF PROCESSING RATE ON UNIT COST OF PLUTONIUM FOR PLANT HAVING NOMINAL CAPACITY OF 3 METRIC TONS/DAY

4.7 Future Cost Reductions

A partial list of future developments which would have possibilities for cost reduction follows:

1. New and better instrumentation to replace sampling and analysis and to make possible further replacement of batch operation by continuous operation (in particular, continuous flow from radioactive areas to nonradioactive areas, which would reduce the equipment and cell space required for holdup of material).

2. Continuous slug dissolving.

3. Continuous feed preparation.

4. Elimination of the centrifugation step in feed preparation by development of a nitric acid—soluble fuel-element bonding agent to replace the aluminum-silicon material in present use.

5. Processing all solvent through one rather than two solvent recovery systems, and replacement of the dilute nitric acid washes in spray columns by water purge washes in the centrifuges.

6. Permanent waste storage.

7. Market for fission products.

8. Fluid fuel which would be more adaptable to continuous processing.

5.0 ACKNOWLEDGMENT

Acknowledgment is due to F. L. Culler for guidance; to W. G. Stockdale for the Idaho Chemical Processing Plant cost data; to T. A. Arehart, D. O. Darby, J. R. Flanary, and R. B. Lindauer, who served as a planning committee; to C. A. Cooper for equipment cost estimates; to the members of all four sections of the Chemical Technology Division, who supplied information and suggestions; and to the many other people throughout the atomic energy program whose contributions to the technology of the Purex process were in this study.

H. R. Zeitlin

H. R. Zeitlin

H. L. Hull HRZ

H. L. Hull

HRZ:HLH:nh:amh

6.0 Appendix 1: DESIGN NOTES

6.1 Design Criteria

1. Equipment, instrumentation, and piping with moving parts are to be located outside cells, with the exception of centrifuges and agitators. (However, air spargers could be substituted for agitators.)

2. All normally used hot process transfer lines and jets are to be duplicated and all hot tanks to have alternate outlets.

3. All process material removed from cells are to be batch-analyzed prior to transfer to cold area. (An exception, the IIBP stream, is continuously monitored for activity as it leaves the second plutonium cycle cell.)

4. All major hot process equipment and cells are to contain spray nozzles for facilitating decontamination of equipment and cell surfaces.

5. All radioactively hazardous material is to be processed within buildings of Class I blast-resistant construction.

6. A minimum working space of 2 ft is to be maintained between major pieces of equipment.

6.2 Process Flowsheet Notes (See pp. 32 through pp. 43 for flowsheets)

6.2.1 General

1. All waste streams to underground waste storage are to be batch-analyzed prior to transfer.

2. All condensate or cooling water wastes are to be batch-analyzed or continuously monitored before being discharged from the plant.

3. Interface jets are provided in all solvent extraction and solvent recovery columns for periodic transfer of accumulated interfacial crud to the rerun collection tank.

6.2.2 Dissolving and Feed Preparation (Flowsheet 1)

Slug Charging Operation. A railroad flatcar bearing Hanford type slug carriers[a] enters the tunnel (see Fig. 6-1) in which a remotely operated bridge crane removes the carrier lid and lifts the slug bucket; the transfer bridge is then positioned at either of two branch monorails, and the bridge crane carrier and bucket enter the corresponding dissolver cell through an opening in the cell wall. The bucket is lowered into the dissolver slug-charging manhole, is tilted to dump the slugs,[a] and is then returned to the slug bucket carrier. The entire operation is viewed by means of periscopes.

(a) "Redox Technical Manual," HW-18700, p. 117 (July 10, 1951).

DWG. 19014 [redacted]

FIG. 6-1

CUTAWAY OF R.R. TUNNEL AND SLUG CHARGING FACILITIES

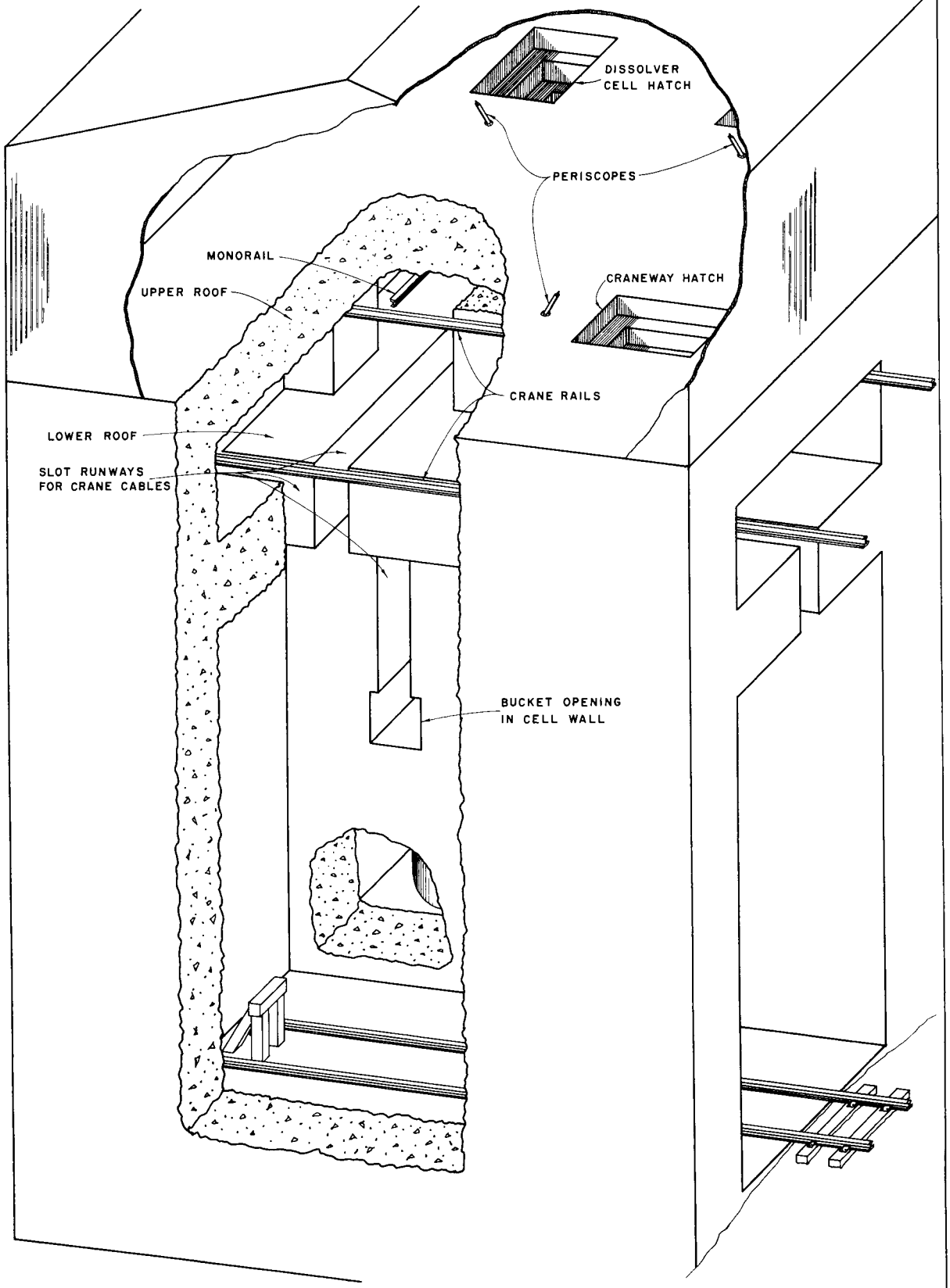

Maintenance of the crane is facilitated by incorporation of a double cell roof. Shielding is provided by suitably covering the slots in the lower cell roof with lead or concrete block.

Dissolving. A charge of 4.8 metric tons of slugs is added to a 2.4-ton heel from the previous dissolving and dissolved as follows:

1. Jacket removal: The jacket removal is carried out in two steps, the first using the partially spent dejacketing solution of the previous dissolution, and the second using a fresh sodium hydroxide—sodium nitrate solution. The first coating solution is discharged to underground waste storage via the coating solution hold tank, and the second coating solution is retained in the hold tank for reuse.

2. Uranium dissolution: Two dissolutions, 2.4 metric tons each, are made, leaving a 100% heel (2.4 tons) of uranium metal. One of the two dissolvers will handle the full plant capacity when operated on a 38-hr cycle. The slug rinse tank receives and holds the final metal heel rinse, which is returned in the following dissolution cycle as dilution water for the raw metal solution.

Feed Preparation. Operation is a batchwise and is based on a 24-hr batch size. The blend hold tank evaporator is used to concentrate, blend, or chemically treat dilute or off-standard feed solutions. A centrifuge removes the insoluble slug-jacket bonding material, silica, and any other solid matter in the raw metal solution; a rerun centrifuge is provided as a spare.

6.2.3 First Cycle and Second Uranium Cycle Solvent Extraction (Flowsheets 2 and 3)

The ICU and IEU condensates and all aqueous streams, with the exception of the IBP, are passed through decanters, the organic phase flowing to the rerun collection tank.

Extraction. The ORNL Purex No. 3 Flowsheet[a] is employed with the following changes:

1. The uranium concentration of the IDF is 340 g/liter.

2. The second uranium cycle flow ratios and acid concentrations are the same as for the first cycle.

(a) W. B. Lanham and J. R. Flanary, "Purex Process Flowsheet No. 3," ORNL CF-51-9-103 (Sept. 19, 1951).

The continuous gravity flow of cold aqueous solutions to the columns and the flow of solvent streams coming from the solvent recovery head tank are controlled by rotameter—control valve systems.

Concentration. The ICU and IEU aqueous streams are concentrated continuously, and the respective condensates are recycled as the ICX and IEX by controlled continuous jetting from the condensate run tanks.

The continuous evaporators are of the vertical long-tube natural-convection type and are controlled by partial reflux of the condensate.

Adjustment. The concentrated ICU is continuously treated with sodium nitrite in a surge tank having a 3-hr holdup, from which it overflows to an air-sparged surge tank for acid adjustment and removal of excess nitrogen dioxide.

6.2.4 Tail-End Treatment[a] (Flowsheet 4)

Feed to one of two silica gel columns is continuous. The beds are operated alternately, and each is regenerated every three days as follows: (1) Uranium remaining in the bed is flushed out (downflow) with nitric acid, (2) fission products are eluted (upflow) with hot oxalic acid, and (3) the bed is washed (upflow) with demineralized water.

6.2.5 Second Plutonium Cycle (Flowsheet 5)

The ORNL Purex No. 3 Flowsheet is employed with one change: The IIBX has been halved. The IBP from the first cycle is continuously treated with sodium nitrite and nitric acid in adjustment pots. Cold aqueous solution and solvent flow to the pots and extraction columns is controlled by rotameter—control valve systems. The IIBP, the only product or waste material leaving a hot area without a batch type analysis, is continuously monitored for activity. By controlling air pressure to a pressure pot, the activity monitor is set to divert off-standard IIBP to the rerun hold tanks in the second plutonium cycle cell.

6.2.6 Plutonium Ion Exchange Isolation[b] (Flowsheet 6)

The IIBP flows continuously through a sand filter to one of six pressure pots, permitting flow to one of six resin columns in which the plutonium is sorbed. When the bed is loaded, the flow of IIBP is directed to a fresh bed, leaving the loaded bed available for elution of uranium and plutonium and preparation for another plutonium sorption step. Valving of the resin columns and attendant pumps is so designed as to permit simultaneous elution of all columns or simultaneous wash of all columns if necessary. At periodic intervals a total plutonium elution of each bed

(a) W. B. Watkins, "Pilot Plant Evaluation of Uranium Product Silica Gel Treatment," ORNL CF-52-5-117 (May 14, 1952).

(b) D. C. Overholt, F. W. Tober, and D. A. Orth, "An Ion-Exchange Process for Plutonium Isolation and Purification," ORNL-1357 (Oct. 1, 1952); subsequent development work on this process is reported in ORNL-1397, 1449, and 1520.

is performed, followed by an oxalic acid elution of fission products. This total elution along with the first and last cuts of every plutonium elution is collected in critically safe tanks, analyzed, batched to a large hold tank, diluted to the IIBP acid concentration, and fed back to a fresh, decontaminated column. Product is collected in critically safe vessels, analyzed, and transferred to product carriers for shipment to metallurgy.

Each resin column is equipped with a rotameter and two variable-speed metering pumps, one on upflow and one on downflow; each column is fed by all elutriant and wash head tanks.

6.2.7 Acid Recovery Evaporation (Flowsheet 7)

A two-stage evaporation (based on an overall decontamination factor 3.5×10^5 per stage[a]) is performed semicontinuously on a 24-hr cycle as follows: At the beginning of each cycle, the second stage evaporator is empty and the first stage evaporator contains the second stage bottoms from the previous cycle. The evaporators are started and operated continuously,[b] dilute acid wastes being fed to the first stage evaporator. The volume of feed for a particular volume of evaporator bottoms is determined by the desired volume reduction, this volume reduction being limited by the heat evolved by the fission products and the solubility of salts present, particularly ferric sulfate.

At the close of the feed period the evaporators are cooled, the first stage bottoms are jetted to the acid recovery waste neutralizer, and the second stage bottoms are jetted to the first stage. This is the end of the cycle.

The second stage condensate (i.e., the dilute nitric acid) is analyzed and jetted to the "cold" acid distillation feed tank on a 6- to 7-hr cycle.[c]

6.2.8 Acid Distillation (Flowsheet 8)

Feed to the nitric acid concentration column is continuous. The column bottoms, 55% HNO_3, the column overhead, and water are collected, analyzed, and pumped to an acid head tank and water storage tank, respectively, for reuse in cold solution makeup.

(a) W. B. Watkins, "Evaluation of Full-Scale Savannah River Project Evaporator," ORNL CF-51-11-113 (Nov. 19, 1952).

(b) Control of the steam rate maintains a constant liquid level, and addition of water, controlled by measurement of the overhead vapor temperature, maintains the acidity of the first stage evaporator bottoms at 8 N HNO_3. At this normality, the volatilization of ruthenium is limited.

(c) The dilute acid is transferred as liquid batches rather than as a continuous vapor stream to prevent activity carryover to the distillation system which is designed for outdoor construction without shielding.

6.2.9 Solvent Recovery (Flowsheet 9)

Two similar systems, one for the ICW and IIBW and one for the IEW solvent streams, incorporate a 2% Na_2CO_3 wash at 50°C in a pulse column, a centrifugation, and a 0.05 N HNO_3 wash in a spray tower of the solvent. The S1 and S3 columns are designed for a required 30-min holdup. Seventy-five percent of the Na_2CO_3 is recycled. Centrifuge cake is discharged as follows: (1) the flow of solvent is diverted by means of a pressure pot, so that the solvent by-passes the centrifuge; (2) the centrifuge is stopped, discharged, and started; (3) the solvent flow is again directed to the centrifuge, and interfacial crud in the column accumulated during the washing period is jetted back to the centrifuge for removal. Makeup TBP and Amsco and TBP-Amsco mixtures are metered in by pump. Spent acid (S2W and S4W) flows by gravity to the acid recovery system, and spent carbonate flows through a decanter to the carbonate hold tank, from which it is transferred to the acid recovery neutralizer where it is analyzed and combined with the first stage evaporator bottoms; it is subsequently transferred to underground waste storage. Storage of hot solvent during decontamination and maintenance of the solvent recovery equipment is facilitated by inclusion of an underground solvent storage tank.

A common spare for the two normally used centrifuges is provided. The solvent jet tanks have a twofold purpose: (1) to elevate the solvent so that cascade flow is possible, and (2) to heat the solvent to approximately 50°C. The solvent hold tank pumps are unit shielded and located in the cold pipe tunnel for ease of maintenance.

6.2.10 Radioactive Gas Separation (RAGS)[a] (Flowsheet 10)

The process, through the gas holders, is operated semicontinuously, whereas the equipment subsequent to the gas holders is operated continuously. Each gas holder, in its turn, collects the total off-gas minus iodine, particulate matter, and approximately 90% of the oxides of nitrogen, of one 2.4-ton dissolving, holds the off-gas for removal of the remaining oxides of nitrogen by oxygen and water scrubbing, and then discharges this gas to the latter part of the process for xenon and krypton removal. The dilute nitric acid produced in the gas holders is used as scrub solution in the acid scrub tower, from which 55% HNO_3 is recovered for use in the slug dissolvers.

6.2.11 Rerun: (Flowsheet 11)

The rerun collection tank receives the jetted column interface solutions, column overflows, off-standard products, and process solutions during plant shutdown. This facility is capable of performing the following operations: (1) chemical treatment, (2) removal of particulate matter or solution crud, (3) separation of phases, and (4) storage of combined or separated aqueous and organic phases in underground tanks.

(a) W. B. Watkins, "Summary of the ORNL Pilot Plant Development of the radioactive Gas Separation Process," ORNL-1410 (Dec. 30, 1952).

6.2.12 Underground Waste Storage: (Flowsheet 12)

The following material is stored in the underground waste storage tanks: coating solution, neutralized acid recovery bottoms, tail-end and solvent recovery waste, centrifuge solids, ion exchange waste, RAGS waste, and laboratory and laundry wastes.

Three 750,000-gal tanks are provided, two for process wastes and one for laboratory and laundry wastes. At flowsheet conditions (i.e., with self-concentration of these wastes) this will provide for a minimum of seven years of process waste storage capacity.

6.3 Reworking Procedures

The reworking of an off-standard product or concentrated acid waste stream is to be accomplished by recycling that stream through the entire solvent extraction battery, as little economic advantage can be gained by introducing rework streams at intermediate points.[a]

IEU Concentrate. The IEU concentrate, sampled at the IEU concentrate hold tank, may be off-standard because of excessive plutonium, fission-product, or other ionic impurity (e.g., sodium, iron) content. If so, it is recycled to the raw metal solution hold tank. If removal of TBP hydrolysis products is necessary, it is transferred to the blend hold tank evaporator and boiled under total reflux for 10 to 15 hr in 8 N HNO_3 to hydrolyze these products completely to phosphoric acid.

Uranium Product. The uranium product, sampled at the uranium product tank, may be off-standard because of excessive oxalic acid content. If so, it is recycled to the raw metal solution hold tank. (Oxalic acid in the IA column at concentrations lower than 0.01 M will cause negligible losses.[b,c])

IIBP Solution. The IIBP, continuously monitored as it leaves the second plutonium cycle cell, may be off-standard because of excessive fission product content. If so, it is diverted by the activity monitor to the rerun plutonium hold tanks for recycle to the raw metal solution hold tank, or, if it is necessary to blend the plutonium into the feed slowly, it may be recycled to the blend hold tank evaporator. An excess of sodium nitrite may be required to destroy the hydroxylamine sulfate and change Pu(III) to Pu(IV).

(a) R. E. Tomlinson and F. W. Woodfield, "Purex Chemical Flowsheet HW No. 1," HW-24763 (June 30, 1952).
(b) "Separations Processes; Progress Report; November, December 1950, January 1951," KAPL-461 (n.d.).
(c) KAPL-744.

Plutonium Product. The plutonium product, sampled at the plutonium product hold tank, may be off-standard because of excessive fission product or uranium content. If so, it is recycled to the raw metal solution hold tank or transferred to the recycle and cleanup hold tank for reworking through a spare resin column.

Condensate from Acid Recovery Evaporation, Second Stage. The acid recovery condensate, sampled at the condensate run tank, may be off-standard because of excessive fission product content. If so, it is recycled to the acid recovery feed tank.

Recovered Nitric Acid. The recovered nitric acid, sampled at the recovered nitric acid run tank may be too dilute for reuse. If so, it is recycled to the dilute nitric acid feed tank.

Condensate from Nitric Acid Column. The nitric acid column condensate, sampled at the water hold tank may have an excessive nitric acid content. If so, it is recycled to the dilute nitric acid feed tank.

Wastes. If any of the various process wastes contain excessive amounts of uranium and plutonium, they are reworked as follows:

1. Coating solution and feed preparation centrifuge cake slurries collected in the coating solution hold tank are stored in the underground process (aqueous) hold tank for later processing, possibly during a reactor shutdown. If necessary, a plant shutdown will make available the feed preparation and first cycle extraction equipment for recovery of the uranium and plutonium.

2. Tail-end waste and solvent recovery centrifuge cake slurries collected in the tail-end waste tank are recycled to the raw metal solution hold tank or to the blend hold tank evaporator. (For the effect of oxalic acid, see "Uranium Product," above.)

3. Ion exchange waste collected in the ion exchange waste hold tank is treated the same as the tail-end waste and solvent recovery centrifuge cake slurries if there is excessive uranium or uranium plus plutonium. If only the plutonium is excessive, it is recycled to the raw metal solution hold tank; or, if not excessively radioactive, it is transferred to the ion exchange recycle hold tank for reworking through a spare resin column.

4. Acid recovery waste and solvent recovery spent carbonate are transferred to the blend hold tank evaporator, boiled under total reflux for 10 to 15 hr in 8 N HNO_3, and used for IAF makeup.

6.4 Building Design Notes

6.4.1 Process Building (see Figs. 3-1, 3-2, and 6-2.)

The process building, including the railroad tunnel, is 241 ft long, 70 ft wide, and approximately 50 ft high, on an average, not including the chemical makeup area enclosure. This enclosure is of Class II construction (i.e., blast-resistant structural frame with friable walls) and is above grade, whereas the cells, galleries, and tunnels are below grade and are of Class I construction (blast-resistant construction). The hot cells are 29 ft wide and have 5-1/2 ft thick concrete biological shielding; warm cells are 32 ft wide and have 4 ft thick shielding.

The cell size and design were determined by equipment layout and gravity flow requirements. All equipment is removable through cell roof hatches.

6.4.2 Laboratory Building and Plutonium Isolation Facilities

The laboratory building is 220 ft long and 100 ft wide. The plutonium isolation facility is approximately 50 ft long and 30 ft wide. Both are two-story structures, the isolation facility and lower floor of the laboratory building being located below grade.

The size of the laboratory building was based on (1) the laboratory analytical load, estimated at 11,000 analyses per month, (2) the number of laboratory and supervisory personnel, and (3) the comparable Idaho Chemical Processing Plant facilities.

Dwg. 19013a [redacted]

FIG. 6-2

CELL BUILDING (GALLERIES, CORRIDORS, ETC. NOT SHOWN)

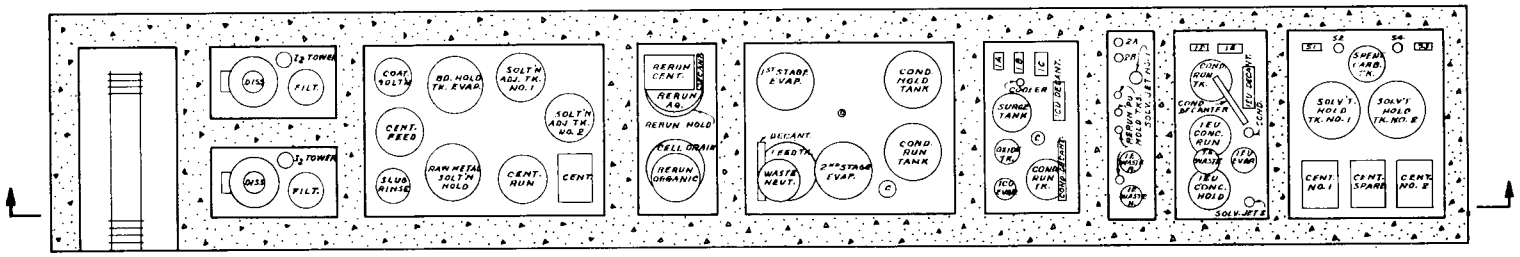

PLAN

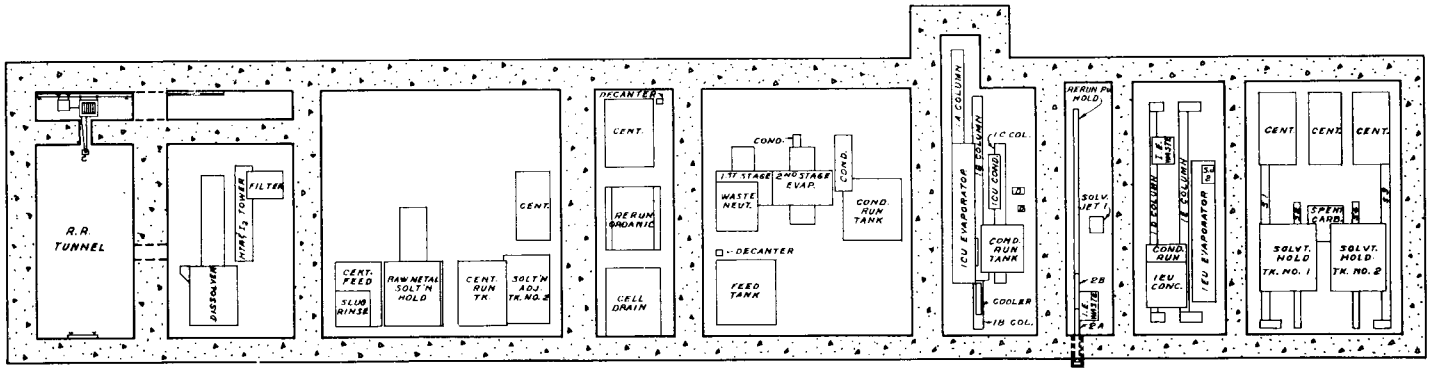

ELEVATION

DWG. 16373 [redacted]

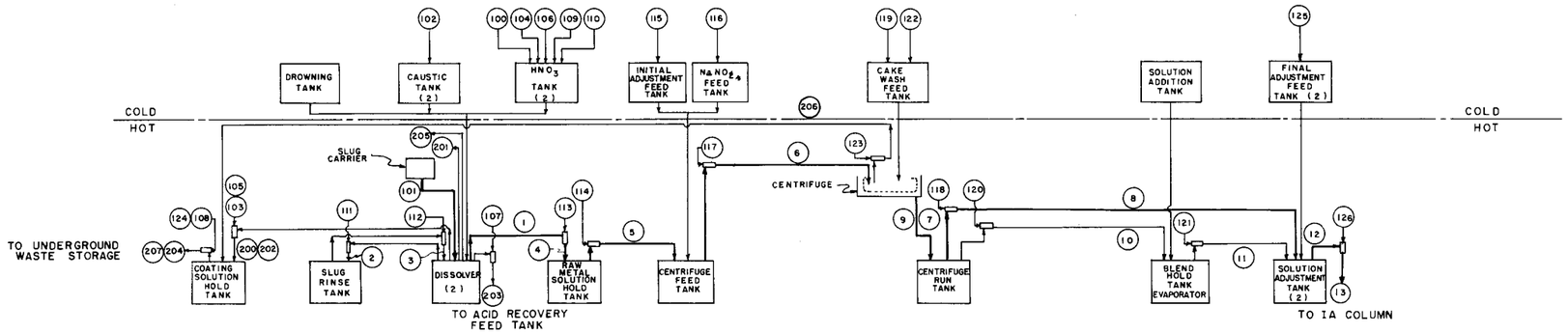

FLOWSHEET I

DISSOLUTION AND FEED PREPARATION

BASIS: 3 METRIC TONS OF URANIUM

Line No.	100	101	102	103	200	201	104	105	202	106	107	203	108	204	109	1	205	110	111	2	112
Process material	25% $NaNO_2$ SOLUTION	SLUGS	50% NaOH SOLUTION	JET DILUTION	COATING SOLUTION	OFF-GAS	HLW COATING SOLUTION (FEED)	JET DILUTION	SPENT RINSE	5% HNO_3 RINSE	JET DILUTION	SPENT RINSE	JET DILUTION	COATING SOLUTION	53% HNO_3 METAL SOLVENT	RAW METAL SOLUTION	OFF-GAS	SLUG RINSE	JET DILUTION	SPENT SLUG RINSE	JET DILUTION
Volume (liters)	1,634	199	317		2,048		700		714	2,059		2,100		2,715	6,459	6,250		1,445		1,474	
(gal)	432	52.6	83.8		541		185		189	544		555		717	1,442	1,651		382		389	
ρ (g/ml)	1.18		1.52		1.25		1.0		1.0	1.02		1.02		1.23	1.33	1.65		1.0		1.0	
Uranium (g/liter)																480					
Plutonium (g/liter)																					
HNO_3 (M)															11.6	0.26					
$NaNO_2$ (M)																					
HNO_3 (kg)										105		105			3,993	101					
Active gases (kg)						Trace											Trace				
NH_4OH (kg)					25	Trace								25							
$NaNO_2$ (kg)					189									189							
Na_2SiO_3 (kg)					7.4									7.4							
$NaAlO_2$ (kg)					299									299							
NaOH (kg)			241		119									119							
Air (kg)		Leakage				Leakage											Leakage				
Silicon (kg)		1.7																			
Aluminum (kg)		98.3																			
Uranium (kg)		3,000																			
$NaNO_3$ (kg)	482				189									189							
H_2O (kg)	1,446		241	50	1,732	Trace	700	14	714	1,995	42	2,037	65	2,511	3,267	5,245	82	1,445	29	1,474	30
NO (kg)																	587				
NO_2 (kg)																	783				
$UO_2(NO_3)_2$ (kg)																4,966					
Total weight (kg)	1,928	3,100	482	50	2,560		700	14	714	2,100	42	2,142	65	3,339	7,260	10,312	1,452	1,445	29	1,474	30
(lb)	4,251	6,836	1,063	110	5,645		1,543	31	1,574	4,630	93	4,723	143	7,362	16,008	22,738	3,202	3,186	64	3,250	66

Line No.	3	113	4	114	5	115	116	117	6	7	118	8	119	9	120	10	121	11	122	123	206	124	207	125	12	126	13
Process material	SLUG RINSE RETURN	JET DILUTION	RAW METAL SOLUTION	JET DILUTION	RAW METAL SOLUTION	55% HNO_3	23.7% $NaNO_2$	JET DILUTION	TREATED METAL SOLUTION	CLEAR METAL SOLUTION	JET DILUTION	CLEAR METAL SOLUTION	CAKE WASH	SPENT CAKE WASH	JET DILUTION	SPENT CAKE WASH	JET DILUTION	DILUTE METAL SOLUTION	CAKE REMOVER	JET DILUTION	CAKE SLURRY	JET DILUTION	CAKE SLURRY	42.2% HNO_3	ADJUSTED SOLUTION	JET DILUTION	IAF
Volume (liters)	1,504		6,453		6,663	481	46.6		7,413	7,413		7,610	20	20		20.5		21	10					1,344	9,005		9,259
(gal)	397		1,705		1,760	127	12.3		1,959	1,959		2,011	5.3	5.3		5.4		5.6	2.6					355	2,379		2,446
ρ (g/ml)	1.0		1.63		1.61	1.33	1.16		1.57	1.57		1.56	1.00	1.00		1.00		1.00	1.00					1.26	1.51		1.498
Uranium (g/liter)			465		450				405	405		394													333		324
Plutonium (g/liter)																											0.178
HNO_3 (M)			0.25		0.24	11.6			0.97	0.97		0.94												8.4	2.1		2.0
$NaNO_2$ (M)							4.0		0.025	0.025		0.024													0.021		0.02
HNO_3 (kg)			101		101	352			453	453		453												714	1,167		1,167
Active gases (kg)																											
NH_4OH (kg)																											
$NaNO_2$ (kg)							12.8		12.8	12.8		12.8													12.8		12.8
Na_2SiO_3 (kg)																					7.4 max.		7.4 max.				
$NaAlO_2$ (kg)																											
NaOH (kg)																											
Air (kg)																											
Silicon (kg)																											
Aluminum (kg)																											
Uranium (kg)																											
$NaNO_3$ (kg)																											
H_2O (kg)	1,504	206	5,451	210	5,661	288	41	228	6,218	6,218	233	6,451	20	20	0.5	20.5	0.5	21	10	0.5	10.5	0.5	11	979	7,451	272	7,723
NO (kg)																											
NO_2 (kg)																											
$UO_2(NO_3)_2$ (kg)			4,966		4,966				4,966	4,966		4,966													4,966		4,966
Total weight (kg)	1,504	206	10,518	210	10,728	640	54	228	11,650	11,650	233	11,883	20	20	0.5	20.5	0.5	21	10	0.5	18 max.	0.5	18 max.	1,693	13,597	272	13,869
(lb)	3,316	454	23,192	463	23,655	1,411	119	503	25,668	25,668	514	26,202	44	44	1	45	1	46	22	1	40 max.	1	40 max.	3,733	29,981	600	30,581

DWG. 16378 R1 [redacted]

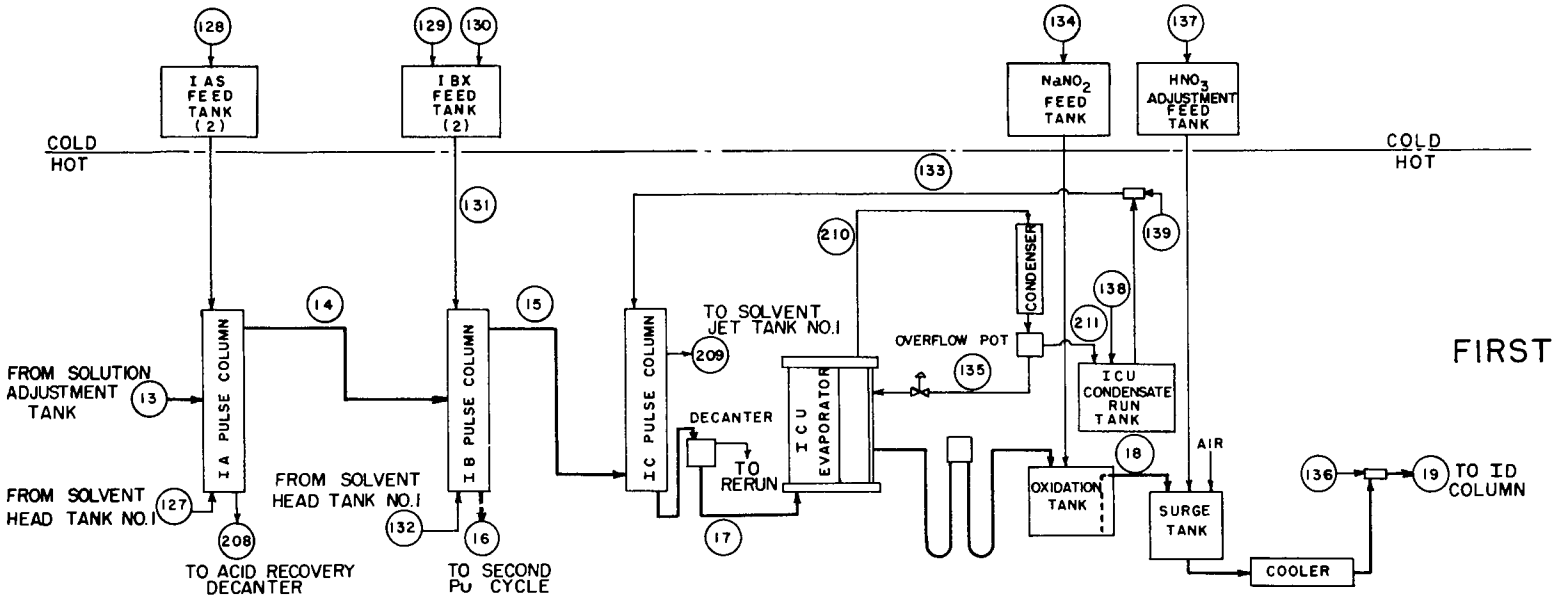

FLOWSHEET 2

FIRST EXTRACTION CYCLE

BASIS: 3 METRIC TONS OF URANIUM

Line No.	13	127	128	14	208	129	130	131	132	15	16	133	209	17	134	210	211	135	18	136	137	19	138	139
Process material	IAF	IAX	17.2% HNO_3 IAS	IAP	IAW	0.64 % HNO_3	30 % $Fe(NH_2SO_3)_2$	IBX	IBS	IBU	IBP	ICX	ICW	ICU	23.7 % $NaNO_2$	EVAPORATOR OVERHEAD	EVAPORATOR CONDENSATE	EVAPORATOR REFLUX	ICU CONCENTRATE	JET DILUTION	55 % HNO_3	IDF	WATER	JET DILUTION
Volume (liters)	9,259	30,832	6,204	32,869	14,074	4,106	81	4,167	8,241	41,110	4,167	61,665	39,073	63,517	110		55,509	11,102	7,262		1,414	8,823	5,325	
(gal)	2,446	8,145	1,639	8,683	3,718	1,085	21.4	1,101	2,177	10,860	1,101	16,290	10,323	16,780	29.1		14,666	2,933	1,919		281	2,331	1,407	
ρ (g/ml)	1.498	0.840	1.098	0.969	1.072	1.00	1.27	1.01	0.84	0.939	1.043	1.00	0.84	1.065	1.16		1.00	1.00	1.56		1.33	1.52	1.00	
Uranium (g/liter)	324			91						73				47					413			340		
Plutonium (g/liter)	0.178			0.050							0.396													
HNO_3 (M)	2.0		3.0	0.19	2.2	0.10		0.10		0.03	1.29			0.02					0.17		11.6	2.0		
$NaNO_2$ (M)	0.02				0.013										4.0				0.062			0.05		
$Fe(NH_2SO_3)_2$ (M)							1.54	0.03			0.03													
TBP in Amsco (vol %)		30		30					30	30			30											
Amsco (kg)		16,860		16,860					4,506	21,366			21,366											
TBP (kg)		9,039		9,039					2,416	11,455			11,455											
H_2O (kg)	7,723		5,639		13,362	4,080	72	4,152			4,152	61,665		61,665	98	66,611	55,509	11,102	6,254	234	846	7,334	5,325	1,209
$UO_2(NO_3)_2$ (kg)	4,966			4,966						4,966				4,966					4,966			4,966		
Plutonium (kg)	1.65			1.65							1.65													
HNO_3 (kg)	1,167		1,173	393.4	1,947	26.3		26.3		77.7	342.0			77.7					77.7		1,034	1,112		
$NaNO_2$ (kg)	12.8				12.8										30.4				30.4			30.4		
$Fe(NH_2SO_3)_2$ (kg)							31.0	31.0			31.0													
Total weight (kg)	13,871	25,899	6,812	31,260	15,322	4,106	103	4,209	6,922	37,865	4,526	61,665	32,821	66,709	128	66,611	55,509	11,102	11,328	234	1,880	13,442	5,325	1,209
(lb)	30,586	57,107	15,020	68,928	33,785	9,054	227	9,281	15,263	83,492	9,980	135,971	72,370	147,093	282	146,877	122,397	24,480	24,978	516	4,145	29,640	11,742	2,666

DWG. 16389 RI [redacted]

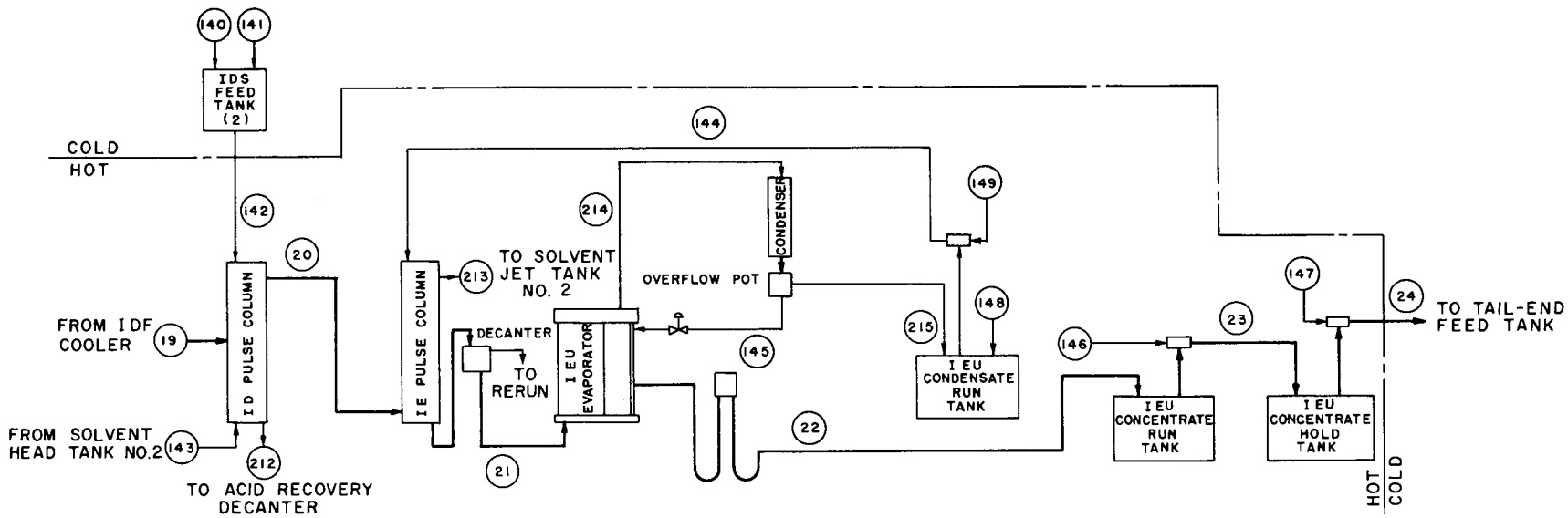

FLOWSHEET 3

SECOND URANIUM CYCLE

BASIS: 3 METRIC TONS OF URANIUM

Line No.	19	140	141	142	143	20	212	144	21	213	214	215	145	22	146	23	147	24	148	149
Process material	IDF	17.7 % HNO_3	30 % $Fe(NH_2SO_3)_2$	IDS	IDX	IDU	IDW	IEX	IEU	IEW	EVAPORATOR OVERHEAD	EVAPORATOR CONDENSATE	EVAPORATOR REFLUX	IEU CONCENTRATE	JET DILUTION	IEU CONCENTRATE	JET DILUTION	IEU CONCENTRATE	WATER	JET DILUTION
Volume (liters)	8,823	5,729	158	5,911	29,380	31,440	13,618	47,160	48,256	29,380		41,746	8,349	6,559		6,773		6,994	4,489	
(gal)	2,331	1,514	41.7	1,562	7,762	8,306	3,598	12,460	12,750	7,762		11,029	2,206	1,733		1,789		1,848	1,186	
ρ (g/ml)	1.52	1.10	1.27	1.11	0.84	0.955	1.076	1.00	1.088	0.84		1.00	1.00	1.64		1.62		1.60	1.00	
Uranium (g/liter)	340					95.4			62.2					457		443		429		
HNO_3 (M)	2.0	3.08		3.0		0.19	2.16		0.124					0.91		0.88		0.86		
$Fe(NH_2SO_3)_2$ (M)			1.54	0.05			0.022													
$NaNO_2$ (M)	0.05						0.032													
TBP in Amsco (vol %)					30	30				30										
Amsco (kg)					16,067	16,067				16,067										
TBP (kg)					8,613	8,613				8,613										
$NaNO_2$ (kg)	30.4						30.4													
H_2O (kg)	7,334	5,184	171	5,355			12,689	47,160	47,160		50,095	41,746	8,349	5,414	215	5,629	219	5,848	4,489	925
$UO_2(NO_3)_2$ (kg)	4,966					4,966			4,966					4,966		4,966		4,966		
HNO_3 (kg)	1,112	1,118		1,118		377	1,853		377					377		377		377		
$Fe(NH_2SO_3)_2$ (kg)			73.3	73.3			73.3													
Total weight (kg)	13,442	6,302	244	6,546	24,680	30,023	14,645	47,160	52,503	24,680	50,095	41,746	8,349	10,757	215	10,972	219	11,191	4,489	925
(lb)	29,640	13,896	538	14,434	54,419	66,201	32,292	103,988	115,769	54,419	110,459	92,050	18,409	23,719	474	24,193	483	24,676	9,898	2,040

DWG. 16387 R1

[redacted]

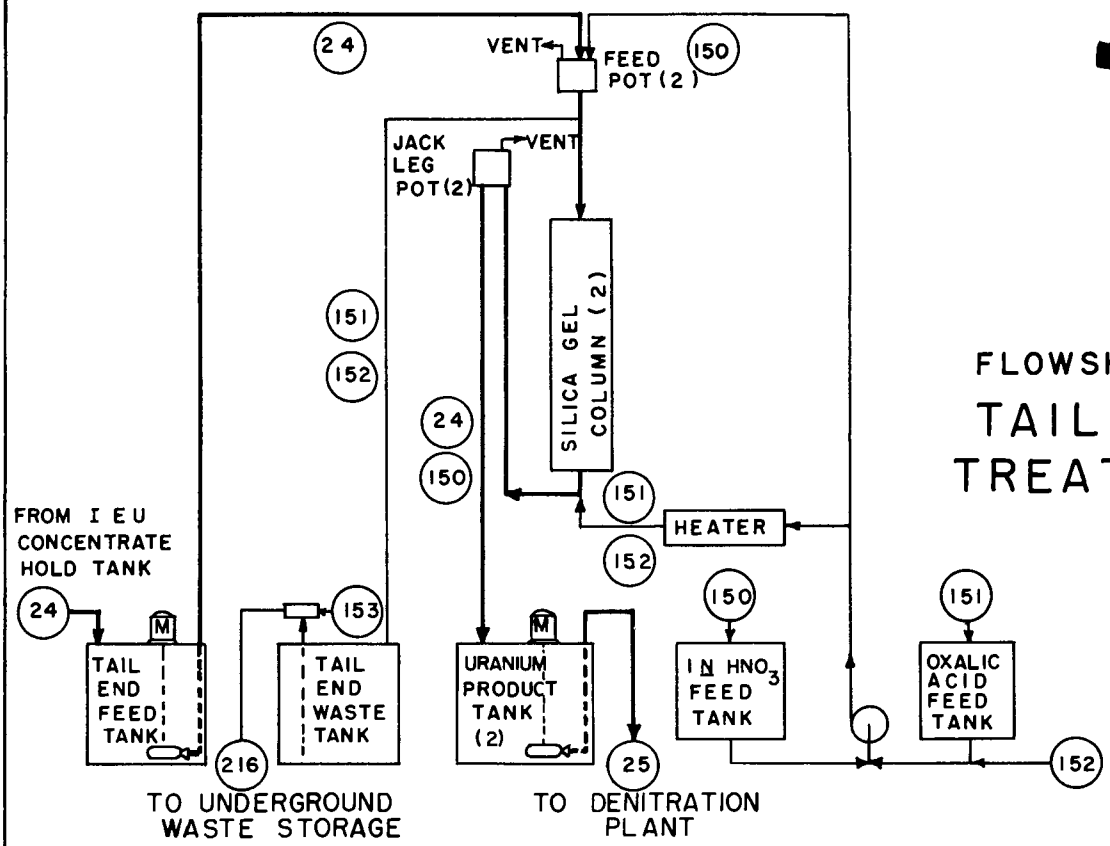

FLOWSHEET 4

TAIL-END TREATMENT

BASIS: 3 METRIC TONS OF URANIUM

Line No.	24	150	25	151	152	153	216
Process material	IEU CONCENTRATE	6.1 % HNO_3	URANIUM PRODUCT	3.5 % OXALIC ACID	WATER	JET DILUTION	TAIL-END WASTE
Volume (liters)	6,994	107.6	7,064	215	143		365
(gal)	1,848	28.4	1,866	56.8	37.8		96.4
ρ (g/ml)	1.60	1.03	1.60	1.01	1.00		1.01
Uranium (g/liter)	429		425				
HNO_3 (M)	0.86	1.0	0.86				0.09
$(COOH)_2$ (M)				0.4			0.24
$(COOH)_2$ (kg)				7.7			7.7
H_2O (kg)	5,848	104	5,952	209	143	7	359
$UO_2(NO_3)_2$ (kg)	4,966		4,966				
HNO_3 (kg)	377	7	382				2
Total weight (kg)	11,191	111	11,300	217	143	7	369
(lb)	24,676	245	24,916	479	315	15	814

DWG. 16386 R.1

[redacted]

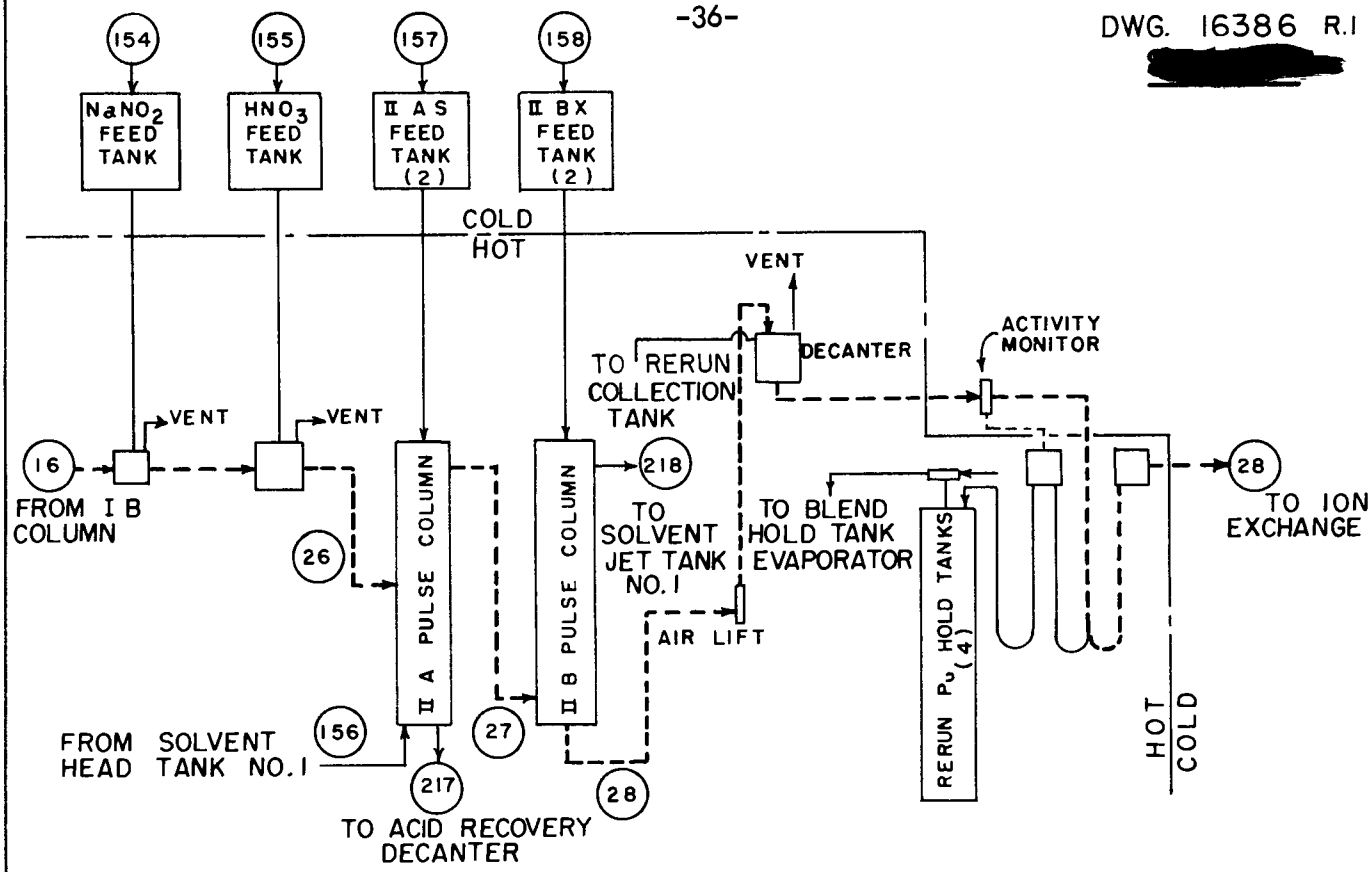

FLOWSHEET 5

SECOND PLUTONIUM CYCLE

BASIS: 3 METRIC TONS OF URANIUM

Line No.	16	154	155	26	156	157	27	217	158	28	218
Process material	I BP	23.7% $NaNO_2$	55% HNO_3	II AF	II AX	II AS	II AP	II AW	II BX	II BP	II BW
Volume (liters)	4,167	202	3,708	8,076	2,019	1,010	2,019	9,058	505	505	2,019
(gal)	1,101	53.4	980	2,134	533	267	533	2,393	133	133	533
ρ (g/ml)	1.043	1.16	1.33	1.20	0.84	1.015	0.848	1.18	1.001	1.04	0.84
Plutonium (g/liter)	0.396			0.204			0.817			3.27	
HNO_3 (M)	1.29		11.6	6.0		0.5	0.12	5.4	0.05	0.53	
$NaNO_2$ (M)		4.0		0.1				0.089			
$Fe(NH_2SO_3)_2$ (M)	0.03			0.015				0.014			
$NH_2OH \cdot \frac{1}{2} H_2SO_4$ (M)									0.05	0.05	
TBP in Amsco (vol %)					30		30				30
Amsco (kg)					1,104		1,104				1,104
TBP (kg)					592		592				592
H_2O (kg)	4,152	178	2,219	6,549		983		7,532	502	502	
Plutonium (kg)	1.65			1.65			1.65			1.65	
HNO_3 (kg)	342		2,712	3,054		31.8	15.3	3,070	1.59	16.9	
$NaNO_2$ (kg)		55.7		55.7				55.7			
$Fe(NH_2SO_3)_2$ (kg)	31.0			31.0				31.0			
$NH_2OH \cdot \frac{1}{2} H_2SO_4$ (kg)									2.07	2.07	
Total weight (kg)	4,526	234	4,931	9,691	1,696	1,015	1,713	10,689	506	523	1,696
(lb)	9,980	516	10,873	21,369	3,740	2,238	3,777	23,570	1,116	1,153	3,740

DWG. 16321 R.1 [redacted]

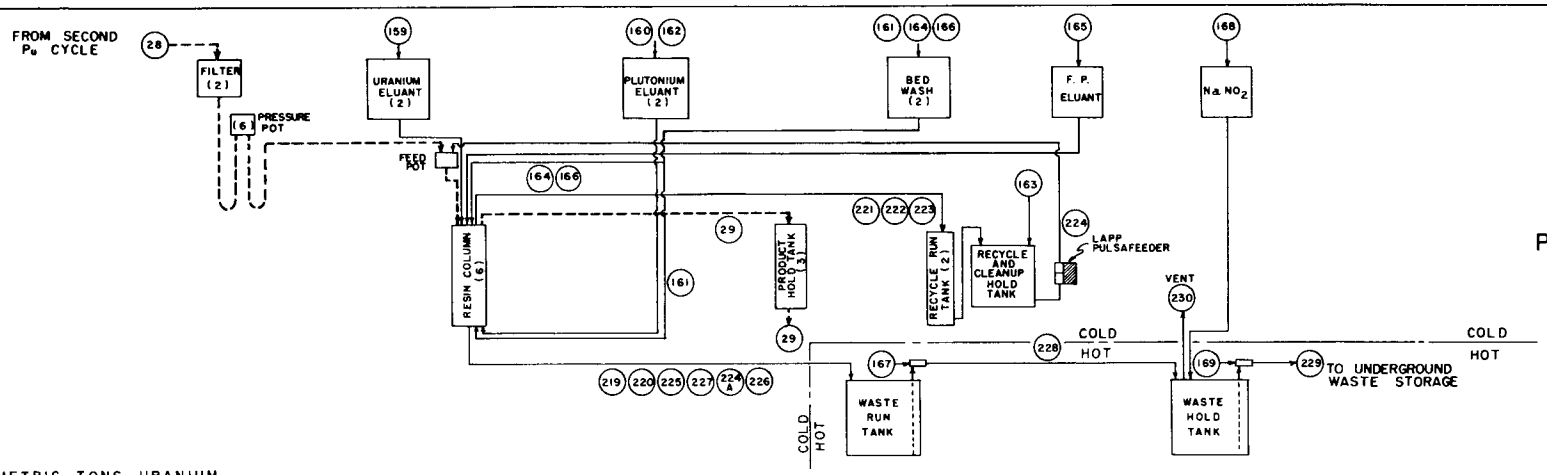

FLOWSHEET 6

PLUTONIUM ISOLATION

BASIS: 3 METRIC TONS URANIUM

Line No.	28	219	159	220	160	221	161	29	222	162	223	163	224	224A	164	225	165	226	166	227	167	228	168	169	229	230
Process material	IIBP	IIBP WASTE STREAM	URANIUM ELUANT	URANIUM ELUATE	PLUTONIUM ELUANT	RECYCLE NO. 1	BED WASH	PLUTONIUM PRODUCT	RECYCLE NO. 2	PLUTONIUM CLEANUP ELUANT	PLUTONIUM CLEANUP ELUATE	DILUTION H_2O	TOTAL RECYCLE	TOTAL RECYCLE WASTE	DEGAS WASH	DEGAS WASH WASTE	F. P. ELUANT	F. P. ELUATE	BED WASH	BED WASH WASTE	JET DILUTION	WASTE	23.7% $NaNO_2$	JET DILUTION	WASTE	OFF-GAS
Volume (liters)	505	505	383	383	27.5	15.3	45.9	27.5	28.6	16.3	15.3	132	191	191	7.14	11.2	5.1	5.1	3.06	2.04		1,120	13.0		1,154	
(gal)	133	133	101	101	7.27	4.04	12.1	7.27	7.56	4.31	4.04	34.9	50.5	50.5	1.89	2.96	1.34	1.34	0.808	0.539		296	3.4		305	
ρ (g/ml)	1.04	1.04	1.01	1.01	1.19	1.01	1.01	1.25	1.01	1.21	1.20	1.00	1.02	1.02	1.01	1.05	1.02	1.02	1.01	1.01		1.02	1.16		1.02	
Plutonium (g/liter)	3.27					0.05		60	0.5		1.80		0.22													
HNO_3 (M)	0.53	0.52		0.02	5.7		0.1	5.7	0.1	5.7	5.7		0.47	0.047	0.1	0.59			0.1	0.1		0.33			0.32	
$NH_2OH \cdot \frac{1}{2} H_2SO_4$ (M)	0.05	0.05	0.05	0.05		0.05	0.05		0.05				0.012	0.012	0.05	0.046			0.05	0.05		0.042				
NH_2SO_3H (M)					0.3			0.3		0.3	0.3		0.024	0.024		0.018						0.0043				
H_2SO_4 (M)			0.25	0.24		0.25							0.020	0.020								0.086			0.085	
$NaNO_2$ (M)																							4.0			
$(COOH)_2$ (M)																	0.5	0.5				0.002			0.002	
N_2 (kg)																										0.14
Uranium (kg)				TRACE																						
Plutonium (kg)	1.65					0.0008		1.650	0.0143		0.0275		0.0426													
HNO_3 (kg)	16.9	16.5		0.51	9.89		0.289	9.89	0.180	5.86	5.50		5.68	5.68	0.045	0.42			0.019	0.013		23.0			23.0	
$NH_2OH \cdot \frac{1}{2} H_2SO_4$ (kg)	2.07	2.07	1.57	1.57		0.063	0.188		0.117				0.180	0.180	0.029	0.042			0.013	0.008		3.87				
NH_2SO_3H (kg)					0.80			0.80		0.47	0.45		0.45	0.45		0.02						0.47				
H_2SO_4 (kg)			9.38	9.00		0.38							0.38	0.38								9.38			9.62	
$NaNO_2$ (kg)																							3.58			
$(COOH)_2$ (kg)																	0.230	0.230				0.230			0.230	
N_2O (kg)																										2.08
Na_2SO_4 (kg)																									3.69	
H_2O (kg)	502	502	375	375	22.0	15.0	45.9	22.0	28.6	13.4	12.3	132	187.9	187.9	7.14	11.3	4.95	4.95	3.06	2.04	22.4	1,105	11.4	23.1	1,141	
Total weight (kg)	523	521	386.0	386.1	32.7	15.44	46.4	34.3	28.9	19.7	18.3	132	194.6	194.6	7.22	11.8	5.18	5.18	3.09	2.06	22.4	1,142	15.0	23.1	1,177	2.2
(lb)	1,153	1,149	851.1	851.4	72.1	34.0	102	75.6	63.7	43.4	40.4	291	429.1	429.1	15.9	26.0	11.4	11.4	6.81	4.54	49.4	2,518	33.1	50.9	2,595	4.9

DWG. 16390 R1

[redacted]

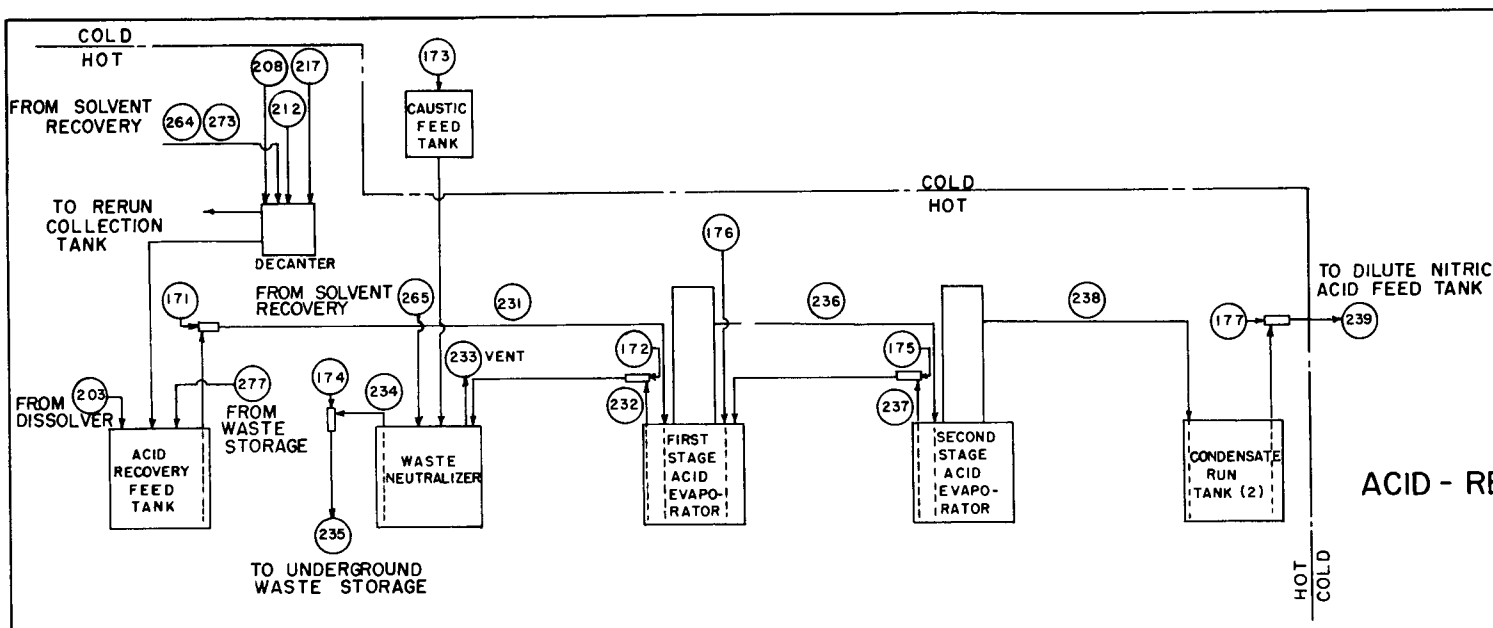

FLOWSHEET 7

ACID - RECOVERY EVAPORATION

BASIS: 3 METRIC TONS OF URANIUM

Line No.	203	208	212	217	264 + 273	277	171	231	232	172	265	233	173	234	174	235	236	237	175	176	238	177	239
Process material	SPENT RINSE	I A W	I D W	II A W	SPENT ACID	CONDENSATE	JET DILUTION	1st STAGE ACID EVAP. FEED	1st STAGE ACID EVAP. BOTTOMS	JET DILUTION	SPENT CARBONATE	OFF-GAS	50% NaOH	NEUTRALIZED WASTE	JET DILUTION	NEUTRALIZED WASTE	1st STAGE ACID EVAP. CONDENSATE	2nd STAGE ACID EVAP. BOTTOMS	JET DILUTION	WATER	2nd STAGE ACID EVAP. CONDENSATE	JET DILUTION	DILUTE HNO_3 (8.3%)
Volume (liters)	2,100	14,074	13,618	9,058	1,438	7,646		48,550	1,107		3,896		486	5,556		5,667	73,839	1,107		24,756	73,229		74,693
(gal)	555	3,718	3,598	2,393	380	2,020		12,827	292		1,028		128	1,468		1,497	19,508	292		6,541	19,347		19,734
ρ (g/ml)	1.02	1.072	1.076	1.18	1.00	1.00		1.09	1.37		1.02		1.52	1.12		1.12	1.05	1.24		1.00	1.04		1.04
HNO_3 (M)	0.79	2.2	2.16	5.4	0.05			2.28	8.0								1.5	8.0			1.39		1.36
$NaNO_2$ (M)			0.032	0.089				0.030															
$Fe(NH_2SO_3)_2$ (M)			0.022	0.014				0.009															
$NaNO_3$ (M)									0.92					1.78		1.74							
Na_2SO_4 (M)									0.19					0.15		0.15							
$Fe_2(SO_4)_3$ (M)									0.19														
NaOH (M)													19.0	0.081		0.079							
$Fe(OH)_3$ (M)														0.076		0.074							
CO_2 (kg)												30											
Na_2CO_3 (kg)											72												
$Fe(OH)_3$ (kg)														45		45							
NaOH (kg)													369	18		18							
$NaNO_3$ (kg)									86.2					839		839							
Na_2SO_4 (kg)									29.9					120		120							
$Fe_2(SO_4)_3$ (kg)									84.1														
H_2O (kg)	2,037	13,362	12,689	7,532	1,405	7,646	1,038	45,737	759	30			369	5,201	124	5,325	70,551	815	27	24,756	69,736	1,523	71,259
HNO_3 (kg)	105	1,947	1,853	3,070	4.5			6,980	558		3,896						6,980	558			6,422		6,422
$NaNO_2$ (kg)		12.8	30.4	55.7				98.9															
$Fe(NH_2SO_3)_2$ (kg)			73.3	31.0				104.3															
Total weight (kg)	2,142	15,322	14,645	10,689	1,410	7,646	1,038	52,920	1,517	30	3,958	30	738	6,223	124	6,347	77,531	1,373	27	24,756	76,158	1,523	77,681
(lb)	4,723	33,785	32,292	23,570	3,109	16,859	2,289	116,689	3,345	66	8,749	66	1,627	13,722	273	13,995	170,956	3,027	60	54,587	167,929	3,358	171,287

DWG. 16388 R1

[redacted]

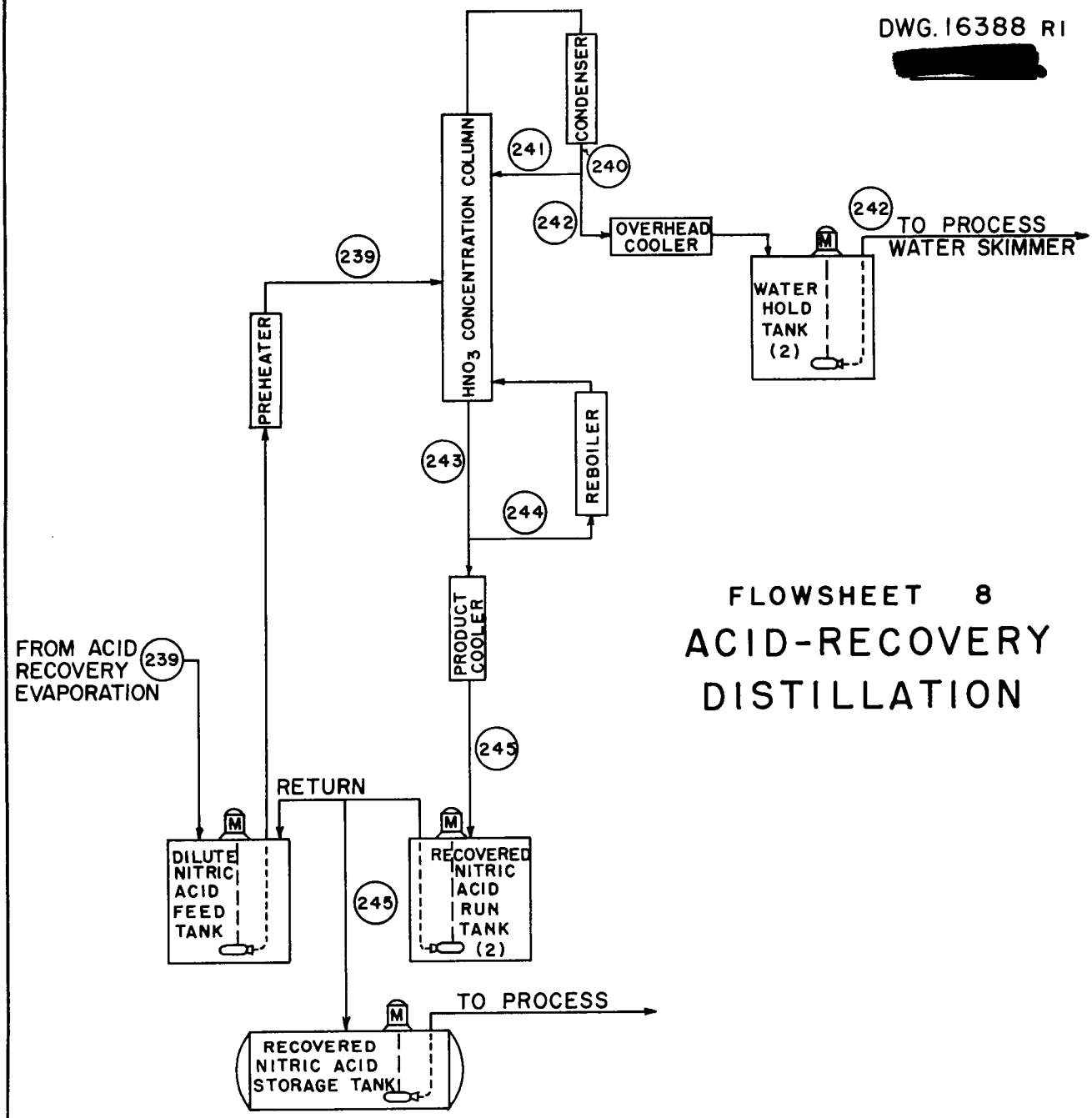

FLOWSHEET 8

ACID-RECOVERY DISTILLATION

BASIS: 3 METRIC TONS OF URANIUM

Line No.	239	240	241	242	243	244	245
Process material	DILUTE HNO_3 (8.3%)	0.1% HNO_3 OVERHEAD	0.1% HNO_3 REFLUX	0.1% HNO_3 CONDENSATE	55% HNO_3 BOTTOMS	55% HNO_3 BOILUP	55% HNO_3 PRODUCT
Volume (liters)	74,693	132,250	66,125	66,125	156,358	147,669	8,689
(gal)	19,734	34,940	17,470	17,470	41,310	39,014	2,296
ρ (g/ml)	1.04	1.00	1.00	1.00	1.33	1.33	1.33
HNO_3 (M)	1.36	0.016	0.016	0.016	11.6	11.6	11.6
H_2O (kg)	71,259	132,118	66,059	66,059	93,580	88,380	5,200
HNO_3 (kg)	6,422	132	66	66	114,376	108,020	6,356
Total weight (kg)	77,681	132,250	66,125	66,125	207,956	196,400	11,556
(lb)	171,287	291,611	145,806	145,806	458,543	433,062	25,481

DWG. 16376 R1 [redacted]

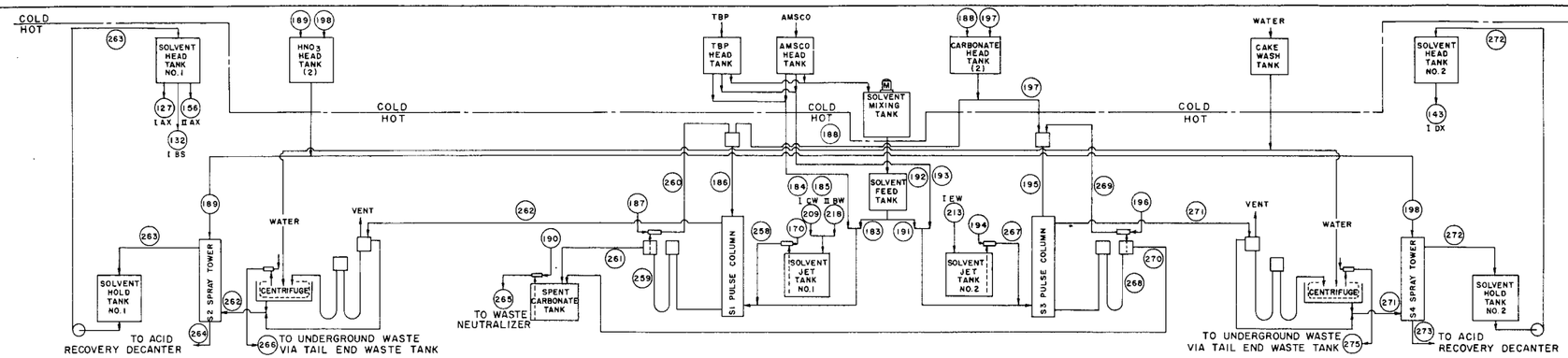

FLOWSHEET 9

SOLVENT RECOVERY

BASIS: 3 METRIC TONS OF URANIUM

Line No.	209	218	183	184	185	170	258	186	259	187	260	261	188	262	263	127	132	156	189
Process material	ICW	IIBW	SOLVENT MAKEUP	TBP MAKEUP	AMSCO MAKEUP	JET DILUTION	S1F	S1S	S1W	JET DILUTION	RECYCLE CARBONATE	SPENT CARBONATE	CARBONATE MAKEUP	S1O	S2O	IAX	IBS	IIAX	0.32% HNO_3
Volume (liters)	39,073	2,019	616*	41.4**	96.7***		41,782	8,218	8,894		6,804	2,224	1,400	41,092	41,092	30,832	8,241	2,019	822
(gal)	10,323	533	163*	10.9**	25.6***		11,039	2,171	2,350		1,798	588	370	10,856	10,856	8,145	2,177	533	217
ρ (g/ml)	0.84	0.84	0.64	0.976	0.78		TWO PHASES	1.02	1.02		1.02	1.02	1.03	0.84	0.84	0.84	0.84	0.84	1.00
Na_2CO_3 (M)								0.193	0.178		0.175	0.178	0.283						
HNO_3 (M)																			0.05
TBP in Amsco (vol%)	30	30	30	100										30	30	30	30	30	
HNO_3 (kg)																			2.6
H_2O (kg)						690	690	8,214	8,904	136	6,814	2,226	1,400						819
Na_2CO_3 (kg)								168	168		126	42	42						
Amsco (kg)	21,366	1,104	337*		75.4***		22,470							22,470	22,470	16,860	4,506	1,104	
TBP (kg)	11,455	592	181*	40.4**			12,047							12,047	12,047	9,039	2,416	592	
Total weight (kg)	32,821	1,696	518*	40.4**	75.4***	690	35,207	8,382	9,072	136	6,940	2,268	1,442	34,517	34,517	25,899	6,922	1,696	822
(lb)	72,370	3,740	1,142*	89**	166***	1,522	77,632	18,482	20,004	300	15,303	5,001	3,179	76,110	76,110	57,107	15,263	3,740	1,812

Line No.	264	190	265	266	213	191	192	193	194	267	195	268	196	269	270	197	271	272	143	198	273	275
Process material	S2W	JET DILUTION	SPENT CARBONATE	SLURRY	IEW	SOLVENT MAKEUP	TBP MAKEUP	AMSCO MAKEUP	JET DILUTION	S3F	S3S	S3W	JET DILUTION	RECYCLE CARBONATE	SPENT CARBONATE	CARBONATE MAKEUP	S3O	S4O	IDX	0.32% HNO_3	S4W	SLURRY
Volume (liters)	822		3,890	4.0	29,380	441*	29.6**	69.1***		29,874	5,876	6,361		4,866	1,590	1,001	29,380	29,380	29,380	588	588	3.0
(gal)	217		1,028	1.1	7,762	117*	7.82**	18.3***		7,893	1,552	1,681		1,286	420	264	7,762	7,762	7,762	155	155	0.8
ρ (g/ml)	1.00		1.02	1.0	0.84	0.84	0.976	0.78		TWO PHASES	1.02	1.02		1.02	1.02	1.03	0.84	0.84	0.84	1.00	1.00	1.0
Na_2CO_3 (M)			0.175								0.193	0.178		0.175	0.178	0.283						
HNO_3 (M)	0.05																			0.05	0.05	
TBP in Amsco (vol%)					30	30	100										30	30	30			
HNO_3 (kg)	2.6																			1.9	1.9	
H_2O (kg)	819	78	3,896	4					494	494	5,874	6,368	97	4,873	1,592	1,001				586	586	3
Na_2CO_3 (kg)			72								120	120		90	30	30						
Amsco (kg)					16,067	241*		53.9***		16,067							16,067	16,067	16,067			
TBP (kg)					8,613	129*	28.9**			8,613							8,613	8,613	8,613			
Total weight (kg)	822	78	3,968	4	24,680	370*	28.9**	53.9***	494	25,174	5,994	6,488	97	4,963	1,622	1,031	24,680	24,680	24,680	588	588	3
(lb)	1,812	172	8,749	8.8	54,419	815*	63.7**	119***	1,089	55,508	13,217	14,306	214	10,943	3,577	2,273	54,419	54,419	54,419	1,297	1,297	6.6

* BASED ON 1.5% LOSS PER THROUGHPUT. ** BASED ON 0.1 VOL % DROP IN THROUGHPUT. *** BASED ON 0.1 VOL % RISE IN THROUGHPUT.

DWG. 16377 R1 [redacted]

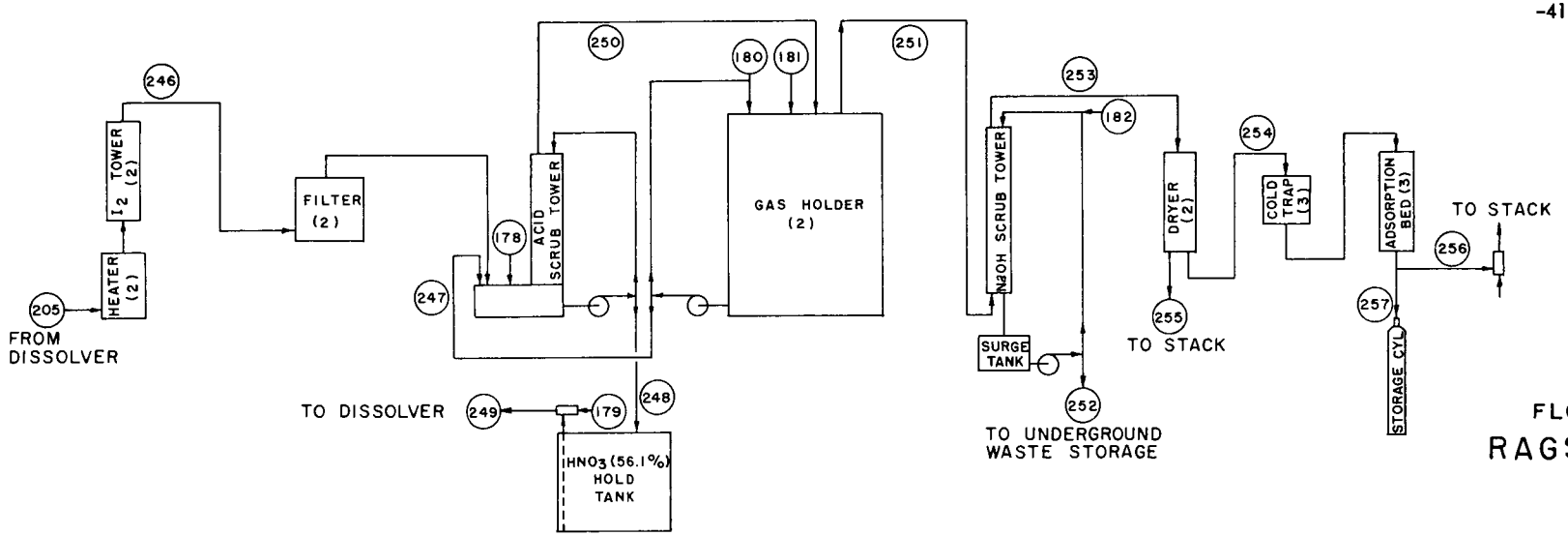

FLOWSHEET 10

RAGS PROCESS

BASIS: 2.4 METRIC TONS OF URANIUM

Line No.	205	246	178	247	248	179	249	250	180	181	251	182	252	253	254	255	256	257
Process material	DISSOLVER OFF-GAS	IODINE UNIT EXIT GAS	OXYGEN	DILUTE HNO_3	56.1 % HNO_3	JET DILUTION	55 % HNO_3	SCRUB TOWER EXIT GAS	WATER	OXYGEN	GAS HOLDER EXIT GAS	NaOH TO SCRUB TOWER	SCRUB TOWER WASTE	NaOH SCRUB TOWER EXIT GAS	ELECTRODRYER EXIT GAS	REGENERATION H_2O	STACK GASES	DESORBED GAS
Volume (liters)				1,719	2,461	66.0	2,529		1,646			11.8	11.8					
(gal)				454	650	17.4	668		435			3.1	3.1					
(ft^3)*	28,700	28,700	10,800					3,084		2,590	638			632	618	14.1	593	24.6
ρ (g/ml)				1.05	1.34	1.00	1.33		1.00			1.14	1.16					
HNO_3 (M)				1.7	11.9		11.6											
NaOH (M)												3.0	1.8					
NO (kg)	470	470						87.9			TRACE							
NO_2 (kg)	626	626									TRACE							
N_2 (kg)	19.8	19.8						19.8			19.8			19.8	19.8		19.1	0.7
O_2 (kg)	6.2	6.2	410							71.0	0.7			0.7	0.7		0.6	0.1
CO_2 (kg)	0.31	0.31						0.31			0.31							
Kr (kg)	0.0535	0.0535						0.0535			0.0535			0.0535	0.0535			0.0535
Xe (kg)	0.334	0.334						0.334			0.334			0.334	0.334			0.334
I^{129} (kg)	0.009																	
H_2O (kg)	66	66		1,620	1,448	66.0	1,514		1,646		0.3	12.0	12.1	0.3		0.30		
HNO_3 (kg)				185	1,850		1,850											
NaOH (kg)												1.42	0.85					
Na_2CO_3 (kg)													0.75					
Total weight (kg)	1,189	1,189	410	1,805	3,298	66.0	3,364	108.4	1,646	71.0	21.5	13.4	13.7	21.2	20.9	0.30	19.7	1.19
(lb)	2,622	2,622	904	3,980	7,272	146	7,418	239.0	3,629	157	47.4	29.5	30.2	46.7	46.1	0.66	43.4	2.62

* at 20°C and 1 atm.

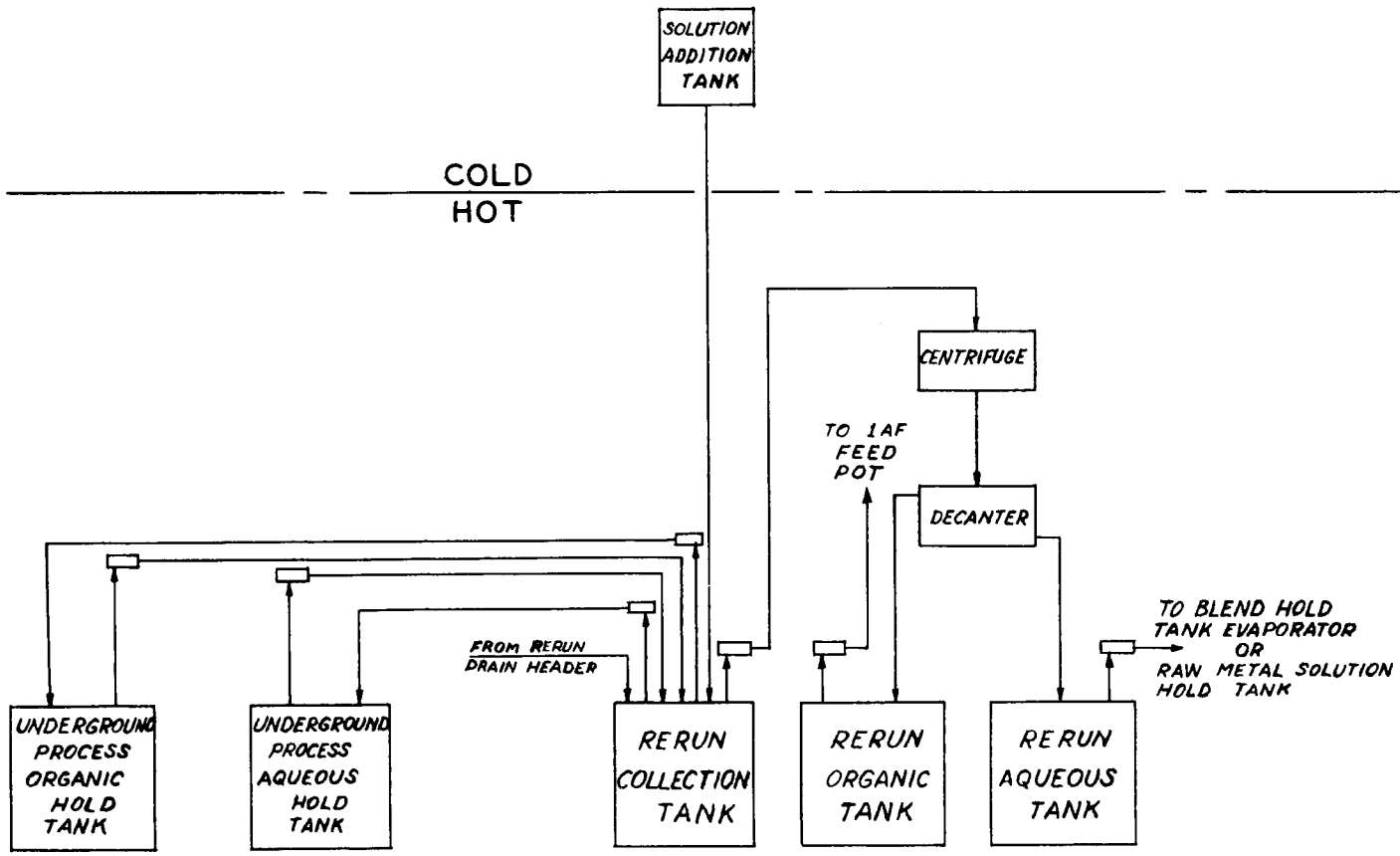

FLOWSHEET II
RERUN

DWG. 16391 [redacted]

DWG. 16766 R1

[redacted]

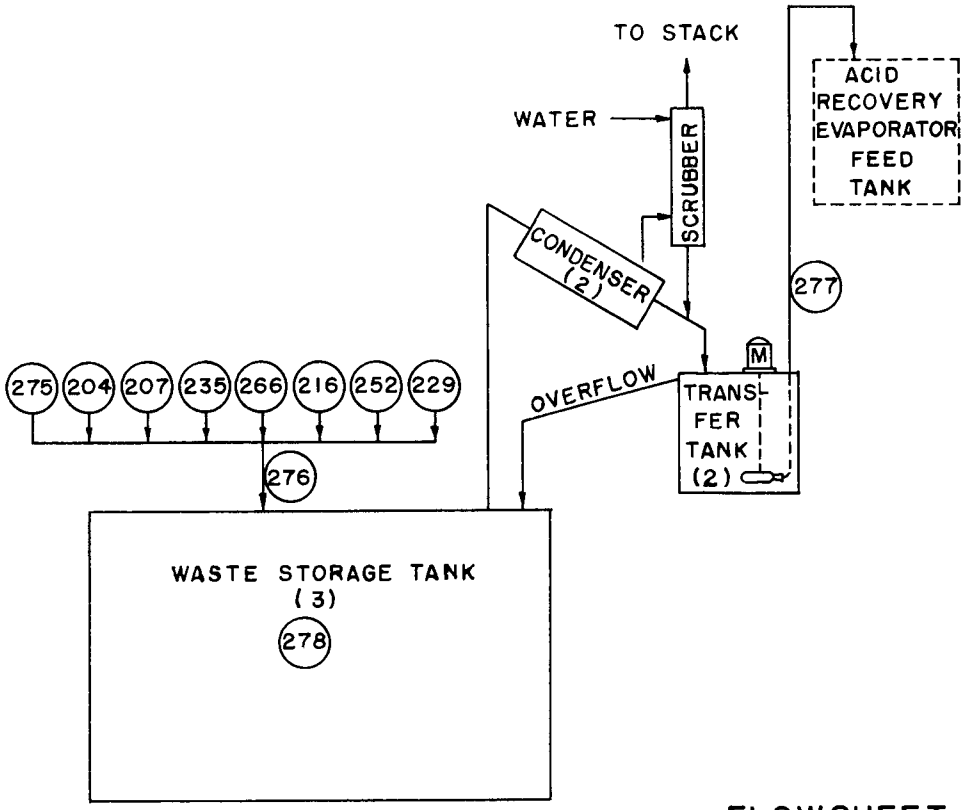

FLOWSHEET 12

UNDERGROUND WASTE STORAGE

BASIS: 3 METRIC TONS OF URANIUM

Line No.	204	207	216	229	235	252	266 + 275	276	277	278
Process material	COATING SOLUTION	CAKE SLURRY	TAIL-END WASTE	ION-EXCHANGE WASTE	NEUTRALIZED WASTE	RAGS SCRUB TOWER WASTE	SLURRY	TOTAL WASTE	WASTE STORAGE CONDENSATE	STORED WASTE
Volume (liters)	2,715		365	1,154	5,667	14.8	7.0	9,972	7,646	2,270
(gal)	717		96.4	305	1,497	3.9	1.9	2,635	2,020	600
ρ (g/ml)	1.23		1.01	1.02	1.12	1.16	1.0	1.13	1.0	1.6
$(COONa)_2$ (kg)								11.8		11.8
$Fe(OH)_3$ (kg)					45			45		45
Na_2CO_3 (kg)						1.0		1.0		1.0
Na_2SO_4 (kg)				3.7	120			138		138
H_2SO_4 (kg)				9.6						
HNO_3 (kg)			2	23						
$(COOH)_2$ (kg)			7.7	0.2						
NH_4OH (kg)	25							25		25
$NaNO_2$ (kg)	189							189		189
Na_2SiO_3 (kg)	7.4	7.4 MAX.						7.4		7.4
$NaAlO_2$ (kg)	299							299		299
NaOH (kg)	119				18	1.1		107		107
$NaNO_3$ (kg)	189				839			1,065		1,065
H_2O (kg)	2,511	11	359	1,141	5,325	15.1	7	9,380	7,646	1,734
Total weight (kg)	3,339	18 MAX.	369	1,177	6,347	17.2	7	11,268	7,646	3,622
(lb)	7,362	40 MAX.	814	2,595	13,995	37.9	15.4	24,846	16,859	7,987

7.0 Appendix 2: COST ESTIMATING TECHNIQUES

Although basically the cost estimating techniques employed in this study were those used widely in ordinary chemical process industries, exceptions to the rule, because of the unique nature of radiochemical processing, were encountered. These exceptions are incorporated as commentary in the following summary of estimating techniques used in this study.

Cost Item	Method Used
Process equipment (installed)	List and price (delivered price) all major and auxiliary equipment. Multiply the resulting cost by the appropriate installation factor to obtain installed equipment cost. Comment: The installation factor employed in this study, 1.14, is based on ICPP costs and is in the lower end of the range of factors suggested in the literature. This lower factor seems reasonable in view of the high cost of stainless steel equipment.
Process piping	Multiply the installed equipment cost by an appropriate piping factor to obtain cost of piping, fittings, and valves. Comment: The piping factor employed in this study, 1.5, is considerably higher than the value of 0.6 used by Lang[a] or the range of values of 0.3 to 0.6 suggested by Chilton.[b] Piping costs are high for a radiochemical processing plant because of piping through concrete, increased length of piping required by remote operation, and the increased number of pipe lines required to reduce the probability of shutdown and to provide for decontamination. The basis for the value of 1.5 is given on p.50.
Instrumentation	Determine a cost of instrumentation per unit of equipment and multiply by the number of units of major equipment. Comment: It was found in this study that the instrumentation cost is a function of the "length" and complexity of a process rather than the capacity. This appears obvious when it is considered that an instrument, such as a liquid-level controller, costs the same whether used with a 100-gal vessel or a 10,000-gal vessel.

(a) H. J. Lang, "Simplified Approach to Preliminary Cost Estimates," Chem. Eng., 55: June, p. 112 (1948).
(b) C. H. Chilton, "Cost Data Correlated," Chem. Eng., 56: June, p. 97 (1949).

Mechanical and special equipment	List and estimate directly. Comment: Sampling-equipment cost, a major item in a radiochemical processing plant, can be obtained by applying a unit price to the total number of samplers required.
Buildings	The cost of the process (cell) building is best obtained by applying unit costs to the major building materials and excavation requirements, if such are available. If not, application of a unit cost to the square feet of cell floor area required would yield a fair approximation. An approximate price based on ICPP costs and costs determined in this study would be $700 per square foot (assuming an internal cell height of 40 ft). Costs for other buildings, such as laboratory, administration, and warehouse structures, can be obtained by the application of unit costs, based on square footage or cubical content of the enclosures, found in the literature. Comment: The laboratory floor area requirements can be obtained from the number of analyses per unit time requirements by assuming (1) a number of samples per analyst per unit time and (2) the number of square feet per required analyst. For this study these numbers were 15 analyses per analyst-shift and 150 ft^2 per analyst.
Service facilities	Apply unit prices available in the literature[a,b] to steam, electricity, water, and compressed air requirements.
Underground waste storage (liquid)	Apply unit costs to the number of gallons of storage capacity required. Comment: Hanford reports a unit cost of approximately 50¢ per gallon, which includes the cost of installed tanks, stainless steel underground lines, and diversion boxes, but not cooling coils, condensers, or the like.
Other facilities	Costs of such facilities as burial grounds, waste lagoons, and burning grounds can be obtained from existing facilities or by "guesstimation."

(a) E. C. Dybdal, "Engineering and Economic Evaluation of Projects," Chem. Eng. Prog., 46: 57 (1950).
(b) P. Jandrisevits, "Preliminary Estimating by Selective Unit Costs," Ind. Eng. Chem., 43: 2299, esp. p. 2301 (1951).

Site development and land costs	Site development costs may be approximated by assuming these equal to 8 to 10% of the manufacturing facilities cost. Land costs vary considerably and must be obtained for the particular plant site considered.
Operation costs	The application of unit costs and factors to raw material, labor, services, and analytical requirements is suggested for best results. (For an illustration of this method, refer to the operating cost estimate in Appendix 3, p. 71. This will necessitate the determination of (1) annual raw materials required; (2) operating labor and maintenance labor requirements; (3) annual steam, water (cooling and process), electricity, and compressed air requirements; (4) annual number of analyses.
Engineering, design, construction, contractor's fee, and preoperational costs	The factors employed in this study, as shown on p. 11, Sect. 4.2.2, are suggested for direct-maintenance plants.

8.0 Appendix 3: BREAKDOWNS OF SUMMARY TABLES

In this appendix are given the detailed breakdowns of the estimates for manufacturing, power, site development, and general facilities (see Sect. 4.2.2).

Manufacturing Facilities, Summary

Cell Building		$ 4,274,000
Equipment in cell building:		
Dissolving	$ 652,993	
Feed preparation	576,348	
Rerun	355,255	
Acid recovery evaporation	549,173	
First solvent extraction cycle	760,230	
Second plutonium cycle	189,461	
Second uranium cycle	613,610	
Solvent recovery	1,003,782	
Miscellaneous	380,278	
Total cell building equipment		$ 5,081,130
Other buildings and equipment:		
Raw material storage	$ 403,214	
Tail-end treatment	159,714	
Plutonium isolation	210,427	
Acid distillation	346,801	
Process liquid storage	123,857	
Process liquid waste storage	1,223,033	
Laboratory waste evaporation	228,000	
Process water system	54,652	
Retention basin	77,000	
Laboratory building	1,980,000	
Burial ground	50,000	
Burning ground	25,000	
Decontamination facility	50,000	
Pond	25,000	
Gaseous waste treatment	408,436	
Total other buildings and equipment		$ 5,365,134
Total manufacturing facilities		$14,720,264

Manufacturing Facilities, Details

A. Cell Building

Concrete. 10,369 yd^3 for cells and hot pipe tunnel at \$100/yd^3 in place;[a] use \$190/yd^3 to allow for concrete (e.g., footings, galleries, tunnels) not included in cells and hot pipe tunnel; 10,369 x 190 = \$1,970,000		
Excavation and backfill. Use 10% of concrete, as location and type of soil are unknown	197,000	
Solution makeup and crane area. Steel and transite structure; 578,400 ft^3 at 60¢/ft^3[b]	347,000	
Heating and ventilation. Use \$1/cfm;[a] air used outside cells before entering cells; 228,000 ft^3 of cell space at 10 changes per hour	38,000	
Stainless steel linings. Cells and hot pipe tunnel (floors and 6 ft up walls); 17,100 ft^2 at \$13/ft^2 installed[a]	222,000	
Electrical services[c]	400,000	
Special equipment. Includes such equipment as radiation-detecting equipment, miscellaneous sampling equipment, and gadgets[a]	1,000,000	
Painting	100,000	
Total cell building		\$4,274,000

(a) Based on Idaho Chemical Processing Plant costs.
(b) Corrected to 1953 from data given by W. L. Nelson, "Cost of Buildings," article No. 22 in "Cost-imating," Oil and Gas Journal publication; also J. Happel, R. S. Aries, and W. J. Borns, "Estimating Chemical Costs," Chem. Eng., 53: December, p. 97 (1946).
(c) \$406,000 for ICPP Building 601, including indirect costs such as profit and construction costs.

B. Equipment in Cell Building

Dissolving

Major equipment in cells

2	slug dissolvers, 8 ft dia x 10 ft high	$ 74,000
2	dissolver condensers, 3 ft 10 in. dia x 15 ft 6 in. high	32,000
1	slug rinse tank, 6 ft dia x 6 ft high	10,580
1	coating solution hold tank, 7 ft dia x 8 ft high	15,300
2	off-gas heaters, 220 ft^2 each	12,000
2	iodine towers, 2 ft 6 in. x 9 ft high	24,900
2	off-gas filters, 6 ft 6 in. dia x 5 ft high	11,600
	Subtotal	$180,380

Major equipment outside cells

1	drowning tank, 6 ft dia x 6 ft high	4,920
2	sodium hydroxide tanks, 3 ft dia x 4 ft high	2,880
2	nitric acid tanks, 7 ft dia x 8 ft high	19,020
	Subtotal	$ 26,820
26	jets	$ 5,140
	Delivered equipment total	$212,340
Installation, 0.14 x D.E.[a]		$ 29,728
	Installed equipment total	$242,068

(a) The value 0.14 is the installation factor based on ICPP costs.

	Piping, fittings and valves, 1.5 x I.E.[a]	$363,102
4	Samplers	20,000
	Instrumentation, $12,012 x 1.387 x 1.67[b]	27,823
	Dissolving equipment total	$652,993

(a) The factor 1.5 is the average of the values 1.2 and 1.8, which were obtained as follows:
(1) The Idaho Chemical Processing Plant costs for piping were adjusted by a factor to correct for the larger average pipe diameter of this design study as compared with the ICPP average pipe diameter. This gave a piping cost for this design study which, when divided by the estimate of installed equipment cost, gave a piping factor of 1.8. This calculation of a piping factor gives a high value since it assumes the same length of pipe for for the two plants and the ICPP probably has the longer length of pipe as it has more pieces of major equipment.
(2) As a rough estimate, the design criteria for remote operation, piping through concrete, reduced probability of shutdown, and decontamination would double the piping costs over those for a comparable fluid processing plant. Using the piping factor of 0.6 given given by H. J. Lang, ("Engineering Approach to Preliminary Cost Estimates," Chem. Eng., 54: September, p. 130, 1947), for fluid processing plants, the piping factor would be 2 x 0.6 = 1.2 for radiochemical plants.

(b) The value 1.387 is a piping and panel factor and 1.67 is an installation labor factor; both factors based on ICPP costs.

Feed Preparation

Major equipment in cell

1	raw metal solution hold tank, 10 ft dia x 11 ft high	$ 21,170
1	centrifuge feed tank, 8 ft dia x 11 ft high	22,940
1	centrifuge, 40 in.	25,000
1	centrifuge run tank, 8 ft dia x 11 ft high	19,790
1	blend hold tank evaporator, 10 ft dia x 11 ft high	22,000
1	condenser, 180 ft^2, and de-entrainer (3 bubble trays)	8,000
2	solution adjustment tanks, 8 ft dia x 11 ft high	39,040
	Subtotal	$157,940

Major equipment outside cell

1	cake wash feed tank, 2 ft dia x 3 ft high	570
1	solution addition tank, 4 ft dia x 5 ft high	2,540
2	final adjustment feed tanks, 4 ft dia x 5 ft high	5,040
1	initial adjustment feed tank, 3 ft dia x 4 ft high	1,790
1	sodium nitrite feed tank, 2 ft dia x 3 ft high	620
	Subtotal	$ 10,560
1	cake wash pump	8,000
31	jets	5,670
	Delivered equipment total	$182,170
	Installation, 0.14 x D.E.	25,504
	Installed equipment total	$207,674
	Piping, fittings, and valves, 1.5 x I.E.	311,511
6	samplers	30,000
	Instrumentation, $11,727 x 1.387 x 1.67	27,163
	Total feed preparation	$576,348

Rerun

Major equipment in cell

1	rerun collection tank, 10 ft dia x 11 ft high	$ 21,070
1	centrifuge, 40 in.	25,000
1	decanter, 1 ft x 1 ft x 6 ft	800
1	rerun aqueous tank, 10 ft dia x 11 ft high	21,060
1	rerun organic tank, 8 ft dia x 11 ft high	19,510
1	cell drain collection tank, 10 ft dia x 11 ft high	20,960
	Subtotal	$108,400

Major equipment outside cell

1	solution addition tank, 2 ft dia x 3 ft high	580
22	jets	4,250
	Delivered equipment total	$113,230
	Installation, 0.14 x D.E.	15,852
	Installed equipment total	$129,082
	Piping, fittings, and valves, 1.5 x I.E.	$193,623
	4 samplers	20,000
	Instrumentation, $5,418 x 1.387 x 1.67	12,550
	Total rerun	$355,255

Acid Recovery Evaporation

Major equipment in cell

	Acid recovery feed tank, 10 ft dia x 11 ft high	$ 20,900
	Waste neutralizer, 7 ft dia x 8 ft high	15,070
	First stage evaporator, 10 ft dia x 10 ft high	26,500
	Condenser, 512 ft^2	10,000
	Second stage evaporator, 10 ft dia x 10 ft high	26,500
	Condenser and subcooler, 840 ft^2	21,500
	Condensate run tank, 10 ft dia x 11 ft high	24,200
	Condensate hold tank, 10 ft dia x 11 ft high	24,280
	Decanter, 1 ft x 1 ft x 10 ft	1,100
	Subtotal	$170,050
Major equipment outside cell		
1	sodium hydroxide feed tank, 3 ft dia x 4 ft high	1,800
19	jets	3,960
	Delivered equipment total	$175,810
Installation, 0.14 x D.E.		24,613
	Installed equipment total	$200,423
Piping, fittings, and valves, 1.5 x I.E.		$300,634
6 samplers		26,000
Instrumentation, $9,548 x 1.387 x 1.67		22,116
	Total acid recovery evaporation	$549,173

First Solvent Extraction Cycle

Major equipment in cell

	IA pulse column	$ 12,000
	IB pulse column	12,000
	IC pulse column	13,500
	ICU decanter, 1 ft x 2 ft x 7 ft	1,400
	ICU evaporator, 977 ft^2	28,700
1	condenser, 515 ft^2	10,000
1	condensate run tank, 7 ft dia x 8 ft high	14,750
1	oxidation tank, 4 ft dia x 5 ft high	1,880
1	surge tank, 6 ft dia x 6 ft high	5,350
	IDF cooler, 30 ft^2	1,600
	Subtotal	$101,180

Major equipment outside cell

	IA pulser	30,000
	IB pulser	30,000
	IC pulser	30,000
2	IAS feed tanks, 7 ft dia x 8 ft high	20,020
2	IBX feed tanks, 7 ft dia x 8 ft high	20,040
1	sodium nitrite feed tank, 2 ft dia x 3 ft high	540
1	nitric acid adjustment feed tank, 4 ft dia x 5 ft high	1,820
	Subtotal	$132,420
2	pumps	1,000
23	jets	3,070
	Delivered equipment total	$237,670
	Installation, 0.14 x D.E.	33,274
	Installed equipment total	$270,944
	Piping, fittings, and valves, 1.5 x I.E.	$406,416
	10 samplers	32,000
	Instrumentation, $21,962 x 1.387 x 1.67	50,870
	Total first solvent extraction cycle	$760,230

Second Plutonium Cycle

Major equipment in cell

IIA pulse column	$ 5,600	
IIB pulse column	1,900	
IIBP decanter, 2 in. x 1 ft x 3 ft	450	
4 rerun plutonium hold tanks, 6 in. dia x 28 ft high	5,720	
Subtotal	$ 13,670	
Major equipment outside cell		
IIA pulser	6,000	
IIB pulser	4,000	
IIBP activity monitor ($3,000 included under instrumentation)	300	
1 sodium nitrite feed tank, 2 ft dia x 3 ft high	540	
1 nitric acid feed tank, 6 ft dia x 6 ft high	5,110	
2 IIAS feed tanks, 4 ft dia x 5 ft high	5,100	
2 IIBX feed tanks, 3 ft dia x 4 ft high	3,980	
Subtotal	$ 25,030	
2 pumps	950	
9 jets	990	
IIBP air lift	150	
Delivered equipment total	$ 40,790	
Installation, 0.14 x D.E.	5,711	
Installed equipment total	$ 46,501	
Piping, fittings, and valves, 1.5 x I.E.	$ 69,752	
10 samplers	30,000	
Instrumentation, $18,654 x 1.387 x 1.67	43,208	
Total second plutonium cycle		$189,461

Second Uranium Cycle

Major equipment in cell

ID pulse column	$ 12,000
IE pulse column	13,500
IEU decanter, 1 ft x 2 ft x 7 ft	1,400
IEU evaporator, 977 ft^2	28,700
1 condenser, 515 ft^2	10,000
1 condensate run tank, 7 ft dia x 8 ft high	14,720
IEU concentrate run tank, 7 ft dia x 8 ft high	14,820
IEU concentrate hold tank, 7 ft dia x 8 ft high	15,080
Subtotal	$110,220

Major equipment outside cell

2 IDS feed tanks, 7 ft dia x 8 ft high	20,040
ID pulser	30,000
IE pulser	30,000
Subtotal	$ 80,040
1 pump	500
24 jets	3,930
Delivered equipment total	$194,690
Installation, 0.14 x D.E.	27,257
Installed equipment total	$221,947
Piping, fittings, valves, 1.5 x I.E.	$332,920
10 samplers	30,000
Instrumentation, $12,409, x 1.387 x 1.67	28,743
Total second uranium cycle	$613,610

Solvent Recovery

Major equipment in cell

2	solvent jet tanks, 2 ft dia x 3 ft high	$ 1,360
S1	pulse column	11,500
S3	pulse column	11,500
3	centrifuges, 40 in. (1 installed spare)	76,200
S2	spray tower	3,000
S4	spray tower	3,000
1	spent carbonate tank, 6 ft dia x 6 ft high	10,450
2	solvent hold tanks, 10 ft dia x 11 ft high	40,880
	Subtotal	$157,890

Major equipment outside cell

S1	pulser	30,000
S3	pulser	30,000
2	solvent head tanks, 10 ft dia x 11 ft high	40,840
1	TBP head tank, 3 ft dia x 4 ft high	1,460
1	Amsco head tank, 4 ft dia x 5 ft high	2,510
2	carbonate head tanks, 6 ft dia x 6 ft high	13,420
1	solvent mixing tank, 6 ft dia x 6 ft high	5,700
1	solvent feed tank, 6 ft dia x 6 ft high	4,990
2	nitric acid feed tanks, 4 ft dia x 5 ft high	5,080
1	cake wash tank, 2 ft dia x 3 ft high	570
	Subtotal	$134,570
12	pumps	23,500
30	jets	4,390
	Delivered equipment total	$320,350
	Installation, 0.14 x D.E.	44,849
	Installed equipment total	$365,199
	Piping, fittings, and valves, 1.5 x I.E.	$547,798
	13 samplers	39,000
	Instrumentation, $19,335 x 1.387 x 1.67	44,785
	Concrete shield for 2 solvent head tanks (1 ft thick) 2360 ft3 at $80/yd3 (a)	7,000
	Total solvent recovery	$1,003,782

(a) Based on Idaho Chemical Processing Plant costs.

Miscellaneous

1	sodium nitrate makeup tank, 6 ft dia x 6 ft high	$ 5,690
1	recovered nitric acid head tank, 8 ft dia x 11 ft high	12,350
1	sodium nitrite makeup tank, 3 ft dia x 4 ft high	2,040
1	ferrous sulfamate tank, 3 ft dia x 4 ft high	1,450
1	55% HNO_3 head tank, 6 ft dia x 6 ft high	5,000
	Subtotal	$26,530
2	pumps	1,000
	Delivered equipment total	$27,530
	Installation, 0.14 x D.E.	3,854
	Installed equipment total	$31,384
	Piping, fittings, and valves, 1.5 x I.E.	47,076
	Instrumentation, $1070 x 1.387 x 1.67	2,478
1	maintenance crane, 50 tons installed	75,000
1	slug loading crane, 5 tons installed (R. R. tunnel)	13,500
3	periscopes for slug charging	25,000
1	fork lift truck	4,000
1	drum truck	5,000
1	truck crane, 10 tons, 50-ft boom, swivel mounted	75,000
	Water demineralization system (5000 gal/day demineralizer, 10,000-gal aluminum tank, stainless steel pump, aluminum lines, stainless steel valves), installed	10,000
	Unit shielding (pulse generators, solvent pumps, condensate reflux valves, IIBP activity monitor, hot spots in cells) 10,000 lead bricks at $5 per brick[a], 27 bricks/ft^3 = 370 ft^3 of lead.	50,000
	Ramp for sodium nitrate makeup tank	1,160
	Ramp for sodium nitrite makeup tank	680
	Elevator, freight	40,000
	Total miscellaneous	$ 380,278
	Total equipment in cell building	$5,081,130
	Cell building	$4,274,000
	Grand total	$9,355,130

(a) Present Oak Ridge National Laboratory cost.

C. Other Buildings and Equipment

Raw Material Storage

Warehouse (5000 ft^2, average height 15 ft), 75,000 ft^3 at 60¢/ft^3 (a)	$ 45,000	
Bulk liquid storage (outdoor)		
2 sodium hydroxide storage tanks, 9 ft dia x 30 ft long	54,600	
4 nitric acid storage tanks, 9 ft dia x 30 ft long	109,200	
1 TBP storage tank, 8 ft dia x 8 ft high	10,190	
2 Amsco storage tanks, 9 ft dia x 30 ft long	54,600	
13 pumps	9,350	
Delivered equipment total	$237,940	
Installation, 0.14 x D.E.	33,312	
Installed equipment total	$271,252	
Piping, fittings, and valves, 0.3 x I.E.	81,376	
Instrumentation, $1764 x 1.387 x 1.67	4,086	
6 safety showers	1,500	
Total bulk liquid storage	$358,214	
Total raw material storage		$403,214

(a) Corrected to 1953 from data given by W. L. Nelson, "Cost of Buildings," article No. 22 in "Cost-imating," Oil and Gas Journal publication.

Tail-End Treatment

Building (prefabricated steel structure, above grade), 20 ft wide x 40 ft long x 20 ft high = 16,000 ft^3 at 60¢/ft^3 [a]	$ 9,600	
Equipment		
1 tail-end waste tank[b], 4 ft dia x 5 ft high	3,600	
2 silica gel columns, 1.1 ft dia x 4 ft high	1,600	
1 tail-end feed tank, 8 ft dia x 11 ft high	14,600	
2 uranium product tanks, 10 ft dia x 11 ft high	31,560	
1 nitric acid feed tank, 3 ft dia x 4 ft high	2,000	
1 oxalic acid feed tank, 4 ft dia x 5 ft high	2,490	
1 heater, 6 ft^2	600	
7 pumps	11,280	
Delivered equipment total	$ 67,730	
Installation, 0.14 x D.E.	9,482	
Installed equipment total	$ 77,212	
Piping, fittings, and valves, 0.6 x I.E.	46,327	
2 samplers	6,000	
Instrumentation, $5,429 x 1.387 x 1.67	12,575	
Shields for silica gel columns (2 in. of lead)	8,000	
Equipment total	$150,114	
Tail-end treatment total		$159,714

(a) Corrected to 1953 from data given by W. L. Nelson, "Cost of Buildings," article No. 22 in "Cost-imating," Oil and Gas Journal publication.
(b) Located in second uranium cycle cell.

Plutonium Isolation

Building (blast resistant, below laboratory, 2 floors, each 50 x 25 ft)		
Concrete, 2-ft-thick walls, 370 yd^3 at $100/$yd^3$ [a]	$ 37,000	
Excavation, 1,157 yd^3 at 10% of concrete cost	3,700	
Dry box, stainless steel lined	20,000	
Subtotal	$ 60,700	
Equipment		
1 waste run tank,[b] 4 ft dia x 5 ft high	3,540	
1 waste hold tank,[b] 4 ft dia x 5 ft high	3,670	
6 resin columns, 6 in. dia x 14 in. high with 2 in. of lead shielding	13,200	
3 product hold tanks, 6 in. dia x 3 ft high	600	
1 recycle and cleanup hold tank, 3 ft dia x 4 ft high	2,070	
2 filters	500	
2 uranium elutriant tanks, 3 ft dia x 4 ft high	4,120	
2 plutonium elutriant tanks, 2 ft dia x 3 ft high	1,700	
2 bed wash tanks, 2 ft dia x 3 ft high	1,700	
1 fission product elutriant tank, 1 ft dia x 2 ft high	250	
1 sodium nitrite tank, 1 ft dia x 2 ft high	180	
2 recycle run tanks, 6 in. dia x 10 ft high	850	
13 pumps	8,310	
11 jets	1,190	
Delivered equipment total	$ 41,880	
Installation, 0.14 x D.E.	5,863	
Installed equipment total	$ 47,743	
Piping, fittings, and valves, 1.5 x I.E.	71,614	
2 samplers	6,000	
Instrumentation, $9,226 x 1.387 x 1.67	21,370	
5 product carriers	3,000	
Equipment total	$149,727	
Plutonium isolation total		$210,427

(a) Based on Idaho Chemical Processing Plant costs.
(b) Located in second plutonium cycle cell.

Acid Distillation (outdoor construction)

1	dilute nitric acid feed tank, 9 ft dia x 37 ft long	$ 30,910	
2	recovered nitric acid run tanks, 7 ft dia x 8 ft high	17,760	
1	recovered nitric acid storage tank, 9 ft dia x 36 ft long	30,800	
2	water hold tanks, 10 ft dia x 14 ft high	35,200	
1	distillation column, 5 ft dia x 22 ft 6 in. high	20,000	
1	preheater, 22 ft^2	1,500	
1	product cooler, 5 ft^2	500	
1	overhead cooler, 68 ft^2	3,000	
1	condenser, 575 ft^2	10,000	
1	reboiler, 537 ft^2	10,000	
1	settling chamber, 2 ft dia x 3 ft high	700	
8	pumps	16,400	
	Delivered equipment total	$176,770	
	Installation, 0.14 x D.E.	24,748	
	Installed equipment total	$201,518	
	Piping, fittings, and valves, 0.6 x I.E.[a]	120,911	
	Instrumentation, $10,306 x 1.387 x 1.67	23,872	
	2 safety showers	500	
	Total acid distillation		$346,801

(a) H. J. Lang, "Engineering Approach to Preliminary Cost Estimates," Chem. Eng., 54: September, p. 130 (1947).

Process Liquid Storage (underground)

1	aqueous hold tank, 23 ft dia x 10 ft high	$ 30,000
1	organic hold tank, 10 ft dia x 11 ft high	11,000 installed
1	solvent hold tank, 23 ft dia x 10 ft high	30,000
	Installed tankage	$ 71,000
2	pumps	$ 1,700
4	jets	1,000
		$ 2,700
	Installation, 0.14 x pumps and jets	378
	Installed equipment total	$ 74,078
	Piping, fittings, and valves, 0.6 x I.E.	44,447
	Instrumentation, $2,302 x 1.387 x 1.67	5,332
	Total process liquid storage	$123,857

Process Liquid Waste Storage

3	underground waste tanks, 750,000-gal, mild steel (similar to Hanford tanks), at 50¢/gal installed complete with stainless steel underground lines and diversion box, but not including cooling coils or condensers	$1,125,000

$$\frac{2{,}250{,}000 \text{ gal}}{200 \text{ gal/ton}} \times \frac{1 \text{ day}}{3 \text{ ton}} \times \frac{1 \text{ yr}}{365 \text{ days}} = 10.3 \text{ yr waste accumulation provided for}$$

(not allowing for laboratory waste concentration or decontamination salts)

2	transfer tanks, 7 ft dia x 8 ft high, above ground, stainless steel, behind 1 ft of concrete; installed	20,000
2	condensers, 717 ft^2 each	27,000
2	vent scrubbers	2,000
2	pumps	3,000
2	jets	144
	Uninstalled equipment subtotal	$ 52,144
	Installation, 0.14 of U.E. total	7,300
	Installed equipment total	$1,184,444
	Piping, fittings, valves, 0.6 x (I.E. - underground tanks)	35,666
	Instrumentation, $1,262 x 1.387 x 1.67	2,923
	Total process liquid waste storage	$1,223,033

Laboratory Waste Evaporation (outdoor construction)

Assume 2,000 gal/day of laboratory waste too hot to discharge to pond and annual investment charge of 5¢/gal[a]

2,000 gal/day x $0.05/gal x 365 days/yr x 100%/16%/yr	$228,000

Process Water System (outdoor construction)

1	process water head tank,[b] 6 ft dia x 6 ft high	$ 5,000
1	process water storage tank, 10 ft dia x 14 ft high	17,600
1	decanter	1,000
1	organic run tank, 4 ft dia x 5 ft high	3,600
1	pump	1,000
	Delivered equipment total	$28,200
	Installation, 0.14 x D.E.	3,948
	Installed equipment total	$32,148
	Piping, fittings, and valves, 0.6 x I.E.	19,289
	Instrumentation, 0.10 x I.E.[c]	3,215
	Total process water system	$ 54,652

(a) Guesstimate.
(b) Located in solution makeup area in cell building.
(c) Instrumentation factor based on previous calculation of instrumentation costs in this report.

Retention Basin (for emergency holdup of cooling water + steam condensate)

4,317,000 gal of cooling water + 136,000 gal of condensate daily = 4,453,000 gal/day or 186,000 gal/hr

2,000,000 gal/186,000 = 10.8 hr holdup

Make similar to Redox basin 207-S

200 ft x 200 ft x 6 ft 9 in. deep for 2,000,000 gal capacity

Concrete, 1,740 yd^3 at \$30/yd^3 [a]	\$52,200	
Excavation, 12,000 yd^3 at 50¢/yd^3 [a]	6,000	
Fencing, 1200 ft of 7 ft chain link fence with gates	4,000	
4 service waste monitors [a]	14,800	
Retention basin total		\$ 77,000

Laboratory Building (includes control laboratory, plant assistance laboratory, change house, offices for operating and laboratory personnel, health physics facilities, and maintenance shops)

2-story building adjacent to cell building, 1 story below grade and 1 above grade

44,000 ft^2 at \$45/ft^2 (equipped) [b]	\$1,980,000
Burial Ground [c]	50,000
Burning Ground [c]	25,000
Decontamination Facility [c]	50,000
Pond or Waste Lagoon (earth dam) [c]	25,000

(a) Based on Idaho Chemical Processing Plant costs.
(b) P. Jandrisevits, "Preliminary Estimating by Selective Unit Costs," Ind. Eng. Chem., 43: 2299 (1950).
(c) Guesstimates

Gaseous Waste Treatment

Process vessel and condenser vent system, 2000 cfm		
1 preheater, 352 ft^2	$ 8,000	
1 glass wool filter, changeable	5,000	
2 stainless steel blowers, 2000 cfm each	6,000	
Cell vent system, 40,000 cfm (10 changes per hour)		
2 fans (1 electric, operating, 40,000 cfm; 1 diesel, standby, 40,000 cfm)	8,000	
Installation, 0.14 x D.E.	3,780	
Installed equipment total	$ 30,780	
Piping, fittings, and valves, 0.6 x I.E.	18,468	
Instrumentation, 0.10 x I.E.	3,078	
Concrete shield, 1 ft thick, for preheater, and glass wool filter 10 x 10 x 5 ft = 500 ft^3 = 18.5 yd^3; 18.5 yd^3 at 60¢/yd^3 (a)	1,100	
Subtotal	$ 53,436	
250-ft stack for 200,000 cfm, complete (stainless steel liner for first 15 ft), installed (a)	175,000	
Partial gaseous waste treatment	$228,436	
Part of RAGS investment (see ORNL-1410, p. 49) required for recovery of oxides of nitrogen	180,000	
Total gaseous waste treatment (exclusive of rare gas removal)		$408,436

(a) Based on Idaho Chemical Processing Plant costs.

Power Facilities

Steam Generation

Process steam	48,000 lb/hr	- calculated daily average
Heating and ventilating	22,000 lb/hr	- estimated for winter
Allowance for peak load	20,000 lb/hr	
	90,000 lb/hr	

An 80,000-lb/hr steam plant, complete with feed water system, coal handling, and building, has been estimated[a] to cost $550,000.

$$550{,}000 \left(\frac{90{,}000}{80{,}000}\right)^{0.6}{}^{(b)} \frac{600}{509.37} = 695{,}000, \text{ taken as } \$700{,}000$$

Electrical Distribution

Listed pump horsepower		=	123
Listed agitator horsepower		=	157
Pulse generator horsepower	7 x 10 + 2 x 3	=	76
Blowers horsepower, cell building	75 in, 75 out	=	150
vessel off-gas		=	30
laboratory building		=	75
	Total	=	611 hp

611 x 0.7455 = 456 kw

More are needed for various uses such as road and fence lighting, lighting of process and service buildings, instruments, compressors, and other unlisted equipment; Redox requires 2500 kva.[d]

Average operating cost for electrical distribution[e] is $40 to $60/kw.

$50(2500)(600/477.02)^{(c)}$ = $157,000, taken as - $160,000

Emergency Electrical Generation

750 kw required

$100 to $175/kw for electric power generation and distribution[e]

$150(750)(600/477)^{(c)}$ = 142,000, taken as - $140,000

(a) P. Jandrisevits, "Preliminary Estimating by Selective Unit Costs," Ind. Eng. Chem., 43: 2299, esp. p. 2301 (1951).
(b) R. Williams, Jr., "'Six-Tenths Factor' Aids in Approximating Costs," Chem. Eng., 54: December, p. 124 (1947).
(c) Cost index correction.
(d) "Redox Technical Manual," HW-18700, p. 1117 (July 10, 1951).
(e) E. C. Dybdal, "Engineering and Economic Evaluation of Projects," Chem. Eng. Prog. 46: 57, esp. p. 64 (1950).

Compressed Air (100 psig)

1000 scfm normal + 150 scfm emergency (instrument) at $90/scfm[a]

1150 (90) + 103,500, taken as $100,000

Water

Listed cooling water	4,316,540 gal/day	
Listed process water (16,300 gal/day)	0 gal/day	since nitric acid column overhead product is 17,470 gal/day
	4,316,540	

Required - 6,000,000 gal/day for plant

ICPP cost is $132,000 for 2,000,000 gal/day[b]

132,000 x 3 = $396,000, taken as $400,000

(a) G. W. T. Kearsley, "Analysis of Construction Costs, Service Building, Idaho Chemical Processing Plant," ORNL CF-52-9-31, p. 8 (Sept. 4, 1952).
(b) Ibid., p. 9.

Site Development and General Facilities

This cost includes clearing, surveying, draining, grading, general excavation, roads, fences, road and fence lighting, yard lighting, parking areas, railroad sidings and switches, yard piping, and buildings and equipment for administrative offices, personnel, payroll, purchasing, receiving, shipping, engineering, transportation, classified documents, security, telephones, lunch rooms, change houses, medical service, fire protection, maintenance shops, and sewage disposal plant.

It is assumed that the cost is 15% of the total manufacturing facilities cost:

$$0.15 \times 14{,}720{,}000 = \underline{\$2{,}200{,}000}$$

Basis for factor:[a]

Administration, etc., 40,000 ft^2 furnished at $\$20/ft^2$	$800,000
General excavation, grading, roads, etc.	$301,000
Miscellaneous buildings	$138,000
Yard piping	$540,000
Fences	$106,000
Top soil and seeding	$ 79,000
Communications and alarms	$ 59,000
Sewage disposal plant	$ 57,000
	$2,080,000

(a) With the exception of the Administration Building, the figures shown were obtained from ICPP costs; (see G. W. T. Kearsley, "Analysis of Construction Costs, Service Building, Idaho Chemical Processing Plant," ORNL CF-52-9-199 (Sept. 4, 1952).

Operating Cost Estimate

	($)	(%)
Raw materials	$ 400,000	12.0
Operating labor, 76 men x 2080 hr/yr x $2.00/hr	316,000	9.5
Maintenance labor,[a] 53 men x 2080 hr/yr x $2.00/hr	220,000	6.6
Supervision, 50% of O.L. + 25% of M.L.[b] = $158,000 + $55,000	213,000	6.4
Operating supplies, 10% of O.L. + 10% of M.L.[c]	54,000	1.6
Electricity, 400 kw x 8,760 hr/yr x $0.01/kwh[c]	35,000	1.1
Steam, 1,300 M lb/day x 365 days/yr x $1/M lb[c]	474,000	14.3
Water, 4,500 M gal/day x 365 days/yr x 0.1$/M gal[c]	164,000	4.9
Compressed air, 500 scfm x 60 min/hr x 8760 hr/yr x $0.05/1000 ft3 [d]	13,000	0.4
Control laboratory, 11,000 analyses/month x 12 months/yr x $4/analysis[e]	528,000	15.9
Maintenance material, 0.5% (plant and equipment minus land minus RAGS[c])	154,000	4.6
Overhead, 100% of O.L. + M.L. + supervision[c]	749,000	22.5
Total	$3,320,000	100.0%
RAGS	416,700	
Total with RAGS	$3,736,700	

(a) Including health physics and instruments.
(b) P. Jandrisevits, "Preliminary Estimating by Selective Unit Costs," Ind. Eng. Chem., 43: 2299, esp. p. 2301 (1951).
(c) C. H. Chilton, "Cost Estimating Simplified," Chem. Eng. 58: June, p. 108 (1951).
(d) E. C. Dybdal, "Engineering and Economic Evaluation of Projects," Chem. Eng. Prog., 46: 57, esp. p. 64 (1950).
(e) ORNL pilot plant laboratory costs.

Raw Materials

	lb/yr (100%)	$/lb (100%)	$/yr
55% HNO_3	2,096,000	0.04	83,800
70% HNO_3	13,000	0.25	3,250
Amsco 123-15	465,000	0.0262	12,200
TBP	250,000	0.643	161,000
30% ferrous sulfamate	84,000	1(a)	84,000
96.5% H_2SO_4	7,560	0.20	1,510
$NaNO_3$	378,000	0.03	11,300
$NaNO_2$	82,500	0.17	14,000
50% NaOH	492,000	0.03	14,800
Na_2CO_3	58,000	0.03	1,740
Oxalic acid	6,390	0.19	1,210
Hydroxylamine sulfate	3,120	2.95	9,200
Sulfamic acid	1,022	0.19	194
Total			$398,204

Basis: 1.5% loss per pass of Amsco and TBP, 92% acid recovery from aqueous wastes plus recovery of oxides of nitrogen from dissolver off-gas.

(a) Price not available.

Cooling Water

	gal/day
Dissolver	9,450
Dissolver condenser	77,300
Centrifuge feed tank	6,890
ICU condenser	503,000
IEU condenser	378,000
First stage evaporator	1,600
Second stage evaporator	1,600
First stage condenser	583,000
Second stage condenser	626,000
ICU condenser run	19,600
IEU condenser run	14,700
IEU concentrate run	34,800
IDF cooler	8,460
Waste ventilator	3,340
HNO_3 still overhead condenser	877,000
HNO_3 still overhead cooler	196,000
HNO_3 cooler	17,200
Underground waste storage condensers	719,000
Cooling jet dilution	132,000
Cooling of fission products	27,600
Laboratory waste condenser	80,000
Total	4,316,540

Steam

	lb/day, 125 psig	lb/day, 15 psig	lb/day, 150 psig
Dissolver	34,400		
Off-gas heater			1,131
Iodine tower			994
Off-gas filter		888	
Centrifuge tank	1,830		
ICU evaporator	187,000		
IEU evaporator	140,000		
First stage acid	200,000		
Second stage acid	200,000		
Tail-end heater		63	
HNO_3 preheater	23,200		
HNO_3 reboiler	324,000		
Jetting	19,100		
Vessel off-gas heater		1,790	
Laboratory waste evaporator	19,200		
Total	1,148,730	2,741	2,125

Total process consumption = 1,153,596 lb/day

Total consumption = 1,300,000 lb/day[a]

(a) Includes 100,000 lb/day for heating and ventilating.

Working Capital

Raw materials and supplies (30 days), 400,000/12 + 54,000/12		$ 37,800
Material in process (plant fill-up of HNO_3, Amsco, and TBP)		$ 30,000
Amsco, 70,000 lb x $0.0262/lb	= $ 1,834	
TBP, 38,000 lb x $0.643/lb	= 24,434	
HNO_3, 68,000 lb x $0.04/lb	= 2,720	
Total	$28,988	
Cash and miscellaneous items (30 days' operating cost),		
3,320,000/12		$277,000
Total		$344,800

In this accounting, semi-finished and finished product are carried with SF inventory. There are no accounts receivable for AEC contract.

SF Inventory

Uranium and plutonium	$44,100,000

[redacted]

Operating Cost and Working Capital As A Function of Processing Rate

Processing rate (tons/day)	1	2	3	4.3
Operating costs (in thousands)	$	$	$	$
Raw materials	133	267	400	573
Operating labor	316	316	316	333
Maintenance labor	200	210	220	245
Supervision	208	210	213	228
Operating supplies	52	53	54	58
Electricity	32	33	35	39
Steam	179	324	474	654
Water	66	109	164	216
Compressed air	13	13	13	13
Control laboratory	422	475	528	607
Maintenance material	154	154	154	154
Overhead	724	736	749	806
Total	2,499	2,900	3,320	3,926
Working capital (in thousands)				
Materials and supplies	15	27	38	52
Materials in process	28	29	30	31
Cash and miscellaneous items	208	245	277	327
Total	251	301	345	410

[redacted]

[redacted]