UNCLASSIFIED

CENTRAL RESEARCH LIBRARY
DOCUMENT COLLECTION

OAK RIDGE NATIONAL LABORATORY LIBRARY
3 4456 0022208 8

ORNL-1865
Progress
Cy. 5

INSTRUMENTATION AND CONTROLS DIVISION

SEMIANNUAL PROGRESS REPORT

FOR PERIOD ENDING JANUARY 31, 1955

CENTRAL RESEARCH LIBRARY
DOCUMENT COLLECTION

LIBRARY LOAN COPY

DO NOT TRANSFER TO ANOTHER PERSON

If you wish someone else to see this document, send in name with document and the library will arrange a loan.

OAK RIDGE NATIONAL LABORATORY
OPERATED BY
CARBIDE AND CARBON CHEMICALS COMPANY
A DIVISION OF UNION CARBIDE AND CARBON CORPORATION
UCC
POST OFFICE BOX P
OAK RIDGE, TENNESSEE

UNCLASSIFIED

ORNL-1865

Copy No. 5

Contract No. W-7405-eng-26

INSTRUMENTATION AND CONTROLS DIVISION

SEMIANNUAL PROGRESS REPORT

for Period Ending January 31, 1955

C. J. Borkowski, Director

DATE ISSUED

MAY 5 1955

OAK RIDGE NATIONAL LABORATORY
Operated by
CARBIDE AND CARBON CHEMICALS COMPANY
A Division of Union Carbide and Carbon Corporation
Post Office Box P
Oak Ridge, Tennessee

OAK RIDGE NATIONAL LABORATORY LIBRARY

3 4456 0022208 8

INTERNAL DISTRIBUTION

1. C. E. Center
2. Biology Library
3. Health Physics Library
4-6. Central Research Library
7. Reactor Experimental Engineering Library
8-12. Laboratory Records Department
13. Laboratory Records, ORNL R.C.
14. C. E. Larson
15. S. J. Cromer
16. L. B. Emlet (K-25)
17. J. P. Murray (Y-12)
18. A. M. Weinberg
19. E. H. Taylor
20. E. J. Murphy
21. E. D. Shipley
22. C. S. Harrill
23. F. C. VonderLage
24. W. H. Jordan
25. J. A. Swartout
26. S. C. Lind
27. F. L. Culler
28. A. H. Snell
29. A. Hollaender
30. M. T. Kelley
31. K. Z. Morgan
32. T. A. Lincoln
33. A. S. Householder
34. C. E. Winters
35. D. W. Cardwell
36. E. M. King
37. G. E. Boyd
38. W. J. Ladniak
39. P. R. Bell
40. C. J. Borkowski
41. G. S. Hurst
42. R. S. Livingston
43. E. E. Fairstein
44. J. W. Morfitt
45. C. W. Sheppard
46. W. G. Stone
47. D. D. Cowen
48. C. P. Keim
49. C. D. Susano
50. P. M. Reyling
51. G. C. Williams
52. M. J. Skinner
53-54. J. V. Francis
55. R. W. Johnson
56. D. J. Fisher
57. E. G. Struxness
58. J. R. McNally, Jr.
59. J. L. Gabbard
60. R. A. Charpie
61. T. V. Blosser
62. D. L. Gilliland
63. E. L. Olson
64. ORNL Document Reference Library, Y-12 Plant

EXTERNAL DISTRIBUTION

65-66. Ohio State University (Professor of Naval Science)
67. R. Hofstadter, Stanford University
68. J. C. Nance, Consolidated-Vultee Aircraft Corporation
69. J. A. Dever, Minneapolis-Honeywell Regulator Company
70. E. A. Rollor, ANP Project Office, Fort Worth
71. Division of Research and Medicine, AEC, ORO
72-370. Given distribution as shown in TID-4500 under Instrumentation category

DISTRIBUTION PAGE TO BE REMOVED IF REPORT IS GIVEN PUBLIC DISTRIBUTION

CONTENTS

Synchronous Delay Line 1

Ballistic Galvanometer 5

Liquid Scintillation Counter for C^{14} 6

Fission-Chamber Preamplifier 8

Scaler Development 10

Creep-Test Instrumentation 10

20-μsec Variable Delay (Q-1538) 11

Automatic Data Recorder 12

Neutron Dosimeter Pulse Integrator 13

Modifications to the Oracle 13
- Auxiliary memory 13
- Parity checking system 13

Double-Line Linear Amplifier 15

Proportional-Counter Action at Low Pressure 21

Characteristics of the Anton No. 106 Halogen-quenched Geiger Counter 22

INSTRUMENTATION AND CONTROLS DIVISION
SEMIANNUAL PROGRESS REPORT

SYNCHRONOUS DELAY LINE

R. A. Dandl R. S. Stone

A memory device with a synchronously switched condenser has been developed to simulate transport lag for an analog computer. Figure 1 shows the operational diagram of the switch and its associated circuitry. In general, the condensers are charged in sequence to potentials proportional to the prevailing input voltage. These voltages are read some fixed time later and give an output which approximates the form of the input but which is delayed in time. Operation of the circuit can be explained through reference to the diagrammatic representation in Fig. 2.

The amplifier and the condenser being read are shown as dotted lines in the diagram because they are not considered explicitly in the analysis. All that needs to be known about them is that the charge on the condenser being read operates through the high gain and low output impedance of the amplifier so that the condenser common terminal is held at some constant output voltage E_K.

UNCLASSIFIED
ORNL-LR-DWG 5806

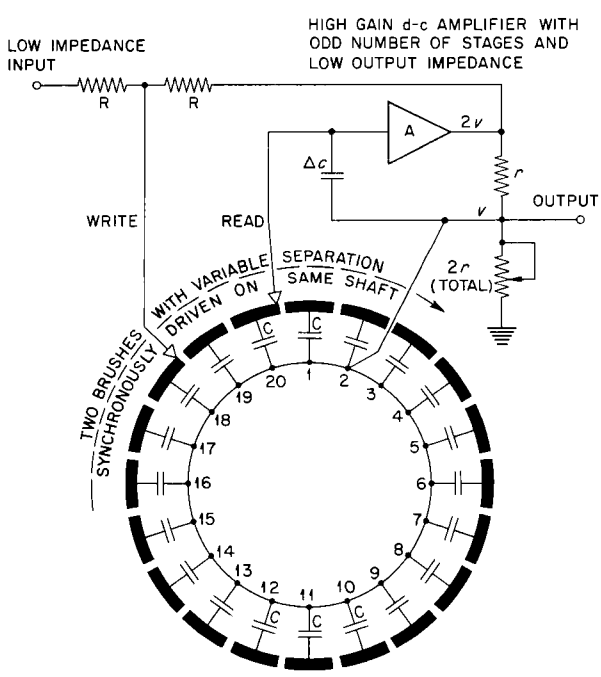

Fig. 1. Circuit of Condenser Switch.

UNCLASSIFIED
ORNL-LR-DWG 5807

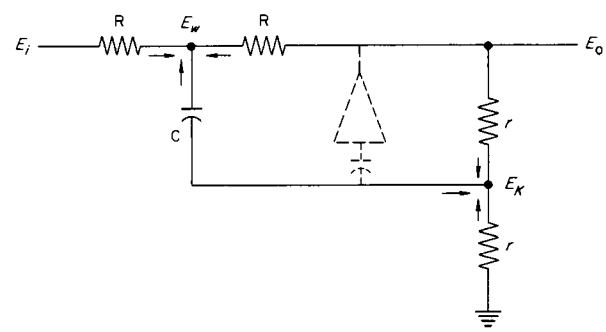

Fig. 2. Circuit of Synchronous Delay Line.

The potentiometer $2r$ in Fig. 1 is adjusted so as to make the total output (load) impedance equal to r (see Fig. 2). The Kirchhoff's Law equations for the currents into the two nodes marked E_w and E_K in Fig. 2 are then as follows:

$$\frac{E_i - E_w}{R} + \frac{E_0 - E_w}{R} + C\frac{d}{dt}(E_K - E_w) = 0 ,$$

$$\frac{E_i + E_0 - 2E_w}{RC} - \frac{dE_w}{dt} = 0 ,$$

$$\frac{dE_w}{dt} + \frac{2}{RC}E_w = \frac{E_i + E_0}{RC} ,$$

$$C\frac{d}{dt}(E_w - E_K) + \frac{E_0 - E_K}{r} - \frac{E_K}{r} = 0 ,$$

$$C\frac{dE_w}{dt} + \frac{E_0 - 2E_K}{r} = 0 ,$$

$$E_0 = 2E_K - rC\frac{dE_w}{dt} ,$$

$$\frac{dE_w}{dt} + \frac{2}{RC}E_w = \frac{E_i + 2E_K - rC\dfrac{dE_w}{dt}}{RC} ,$$

$$\frac{dE_w}{dt} + \frac{2E_w}{(R + r)C} = \frac{E_i + 2E_K}{(R + r)C} .$$

The general solution to these equations is

$$E_w = B \exp\frac{-2t}{(R + r)C} + \frac{E_i + 2E_K}{2} .$$

As a boundary condition, it is known that at $t = 0$ the writing condenser C is effectively a short circuit and that $E_w = E_K$:

$$E_K = B \times 1 + \frac{E_i + 2E_K}{2} ,$$

therefore $B = -E_i/2$, and the complete solution is

$$E_w = E_K + \frac{E_i}{2}\left[1 - \exp\frac{-2t}{(R + r)C}\right] .$$

So

$$\frac{dE_w}{dt} = \frac{E_i}{(R + r)C}\exp\frac{-2t}{(R + r)C} ,$$

and

$$E_0 = 2E_K - rC\frac{dE_w}{dt}$$

$$= 2E_K - E_i\frac{r}{R + r}\exp\frac{-2t}{(R + r)C} .$$

The voltage written on the free terminal of condenser C is E_w, and, from the expression above, its steady-state value is $E_w = E_K + E_i/2$. Since E_K also appears at the common condenser terminal, the total voltage applied across the condenser is $E_i/2$. Hence, E_w, the voltage being currently written, is not affected by E_K, the voltage being currently read.

The voltage $E_i/2$ remains on condenser C until the read brush (Fig. 1) arrives. At read-out, the input of the d-c amplifier is connected, in turn, to each condenser, and, because of the very high gain of the input and the negative feedback through resistor r, the input terminal is driven to virtually zero potential. This means that the (output) common terminal of the condenser must be swung to a potential equal in magnitude but opposite in sign to that which was originally written on the condenser; E_K is identified as $(E_i/2)(t - \tau)$, where τ is the delay time between writing and reading.

It will be noted from the foregoing discussion that the output signal is delayed in time, reversed in polarity, and halved in magnitude. The effect of circuit parameters upon the behavior of the system may be analyzed as follows: Amplifier grid current drains, in turn, each capacitor during the time the read switch is on the corresponding contact. If this leakage amounts to 10^{-10} amp (a pessimistic figure which includes the offset voltage across the input impedance) and if the speed of the switch is one contact per second (20 contacts at 3 rpm), a loss of 10^{-10} coulomb is sustained. Loss in voltage during the reading of a signal then amounts to

$$\frac{\Delta Q}{C} = \frac{1 \times 10^{-10}}{C \times 10^{-6}} = \frac{0.0001}{C} \text{ v},$$

where C is in microfarads. If C is taken as 0.22 μf, this voltage loss becomes 4.5 mv, which is less by a factor of 10^4 than the maximum condenser potential of 50 v. (The analog computer gives an input limited to ±100 v.)

The size of a condenser which may be used is limited by the time constant of the writing circuit. Reference to the expression giving dE_w/dt shows that the writing time constant is $[(R + r)C]/2$. If $C = 0.22\,\mu$f, $R = 100{,}000$ ohms, and $r = 25{,}000$ ohms, the expression becomes

$$\frac{1.25 \times 10^5 \times 2.2 \times 10^{-7}}{2} = 0.014 \text{ sec.}$$

A dwell time of 1 sec on each contact thus constitutes 1.0/0.014 = 73 time constants for the writing circuit. This indicates that the product $(R + r)C$ could be increased by a factor of 10 without seriously affecting the completion of the writing operation.

The output voltage of the operational amplifier used with the switch is

$$E_0 = 2E_K - E_i\frac{r}{R + r}\exp\frac{-2t}{(R + r)C} .$$

Such amplifiers normally operate within the range +100 to −100 v, and E_0 should be held within these limits so as not to cause overload. The input from an analog network of operational amplifiers is represented as E_i and has a maximum value of ±100 v; E_K represents the voltage stored on the read condenser, which has been shown to have a maximum equal to half the input, or ±50 v. To postulate the most extreme situation possible, let $2E_K = +100$ v, $E_i = -100$ v, and $t = 0$. Then

$$E_0 = 100 + 100 \frac{r}{R + r} = 100 \frac{R + 2r}{R + r} .$$

This expression points out the fact that, to avoid transient overloading of the amplifier, R should be much larger than r. Maximum permissible E_i can be set equal to

$$E_{0_{max}} \frac{R + r}{R + 2r} = 100 \frac{R + r}{R + 2r} .$$

When $R = 100{,}000$ ohms and $r = 25{,}000$ ohms,

$$E_{i_{max}} = 100 \frac{125{,}000 \text{ ohms}}{150{,}000 \text{ ohms}} = 83.4 \text{ v.}$$

Computational parameters must therefore be examined so as to make sure that the dynamic range corresponding to the R-r combination used is not exceeded.

Another source of error is leakage current in the condensers; however, it is possible to obtain them with time constants of approximately 10^5 sec. With the use of such condensers, since the maximum displacement between write and read is 19 contacts, or 19 sec, the charge would be expected to decay to $100 \exp(-19 \times 10^{-5})$, or 99.98% of its original value, during the 19-sec time interval. These results would be well within the limits of accuracy for the system.

The small capacitor ΔC is inserted to prevent transients while the read brush is between contacts, the size needed depending upon the duty cycle of the switch. The voltage change between contacts can be expressed as

$$\frac{\Delta Q}{\Delta C} = \frac{I_g \Delta t}{\Delta C} ,$$

or as

$$\Delta C = \frac{I_g \Delta t}{\Delta V}$$

If 99% duty cycle is assumed, $\Delta t = 0.01$ sec, $I_g = 10^{-10}$ amp, and $\Delta C = 10^{-12}/\Delta V = 1/\Delta V$ $\mu\mu$f. If 10^{-2} v is set as the maximum voltage drop permissible, ΔC must be at least 100 $\mu\mu$f. This voltage drop lasts only for 0.01 sec, and if the output of the switch is integrated in some subsequent circuit, a much larger transient can be tolerated.

The ΔC capacitor naturally "spills over" an error voltage from the preceding step onto the one currently being read. The magnitude of this error voltage is $\Delta C/(C + \Delta C)$ times the voltage on the preceding step. When the relative values are 100 $\mu\mu$f and 0.22 μf, the reduction factor is $1 \times 10^{-10}/2.2 \times 10^{-7} = 4.5 \times 10^{-4}$. Since in a ±100-v computing system the highest voltage appearing on any condenser will be 50 v, the greatest spill-over possible is $50 \times 4.5 \times 10^{-4} = 23$ mv. This quantity is comparable in magnitude to the 10-mv switching transient and indicates that a value of 100 $\mu\mu$f is about the proper compromise for ΔC. In computations that require shorter lags or that permit a scaling factor for time, speedup of the switch by a factor of 10 would permit a decrease in ΔC to 10 $\mu\mu$f and would improve the performance of the switch system by an order of magnitude.

A switch was built according to the specifications given above, and the completed unit is shown in Fig. 3. This device has been successfully used to simulate a multisecond transport lag in a reactor control problem solved with the computer and should continue to be useful in this type of application.

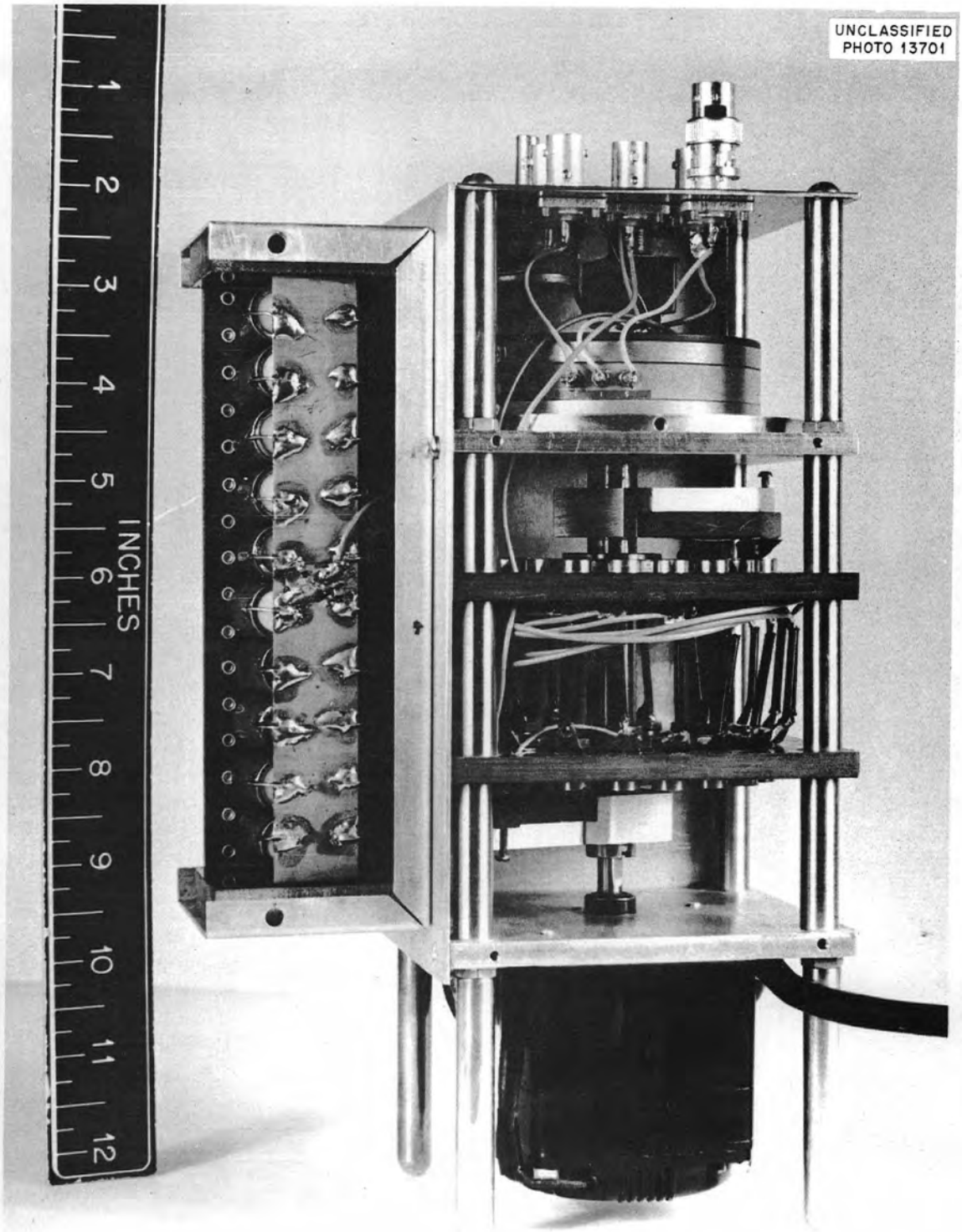

Fig. 3. Synchronous Delay Line.

BALLISTIC GALVANOMETER

E. R. Mann

Investigation of remanent magnetism in Armco ingot magnetic clutches used to release reactor shim rods can be made in a conventional manner by use of a ballistic galvanometer and a search coil through which the magnetic flux threads. The total change in lines of force threading the search coil is proportional to the galvanometer throw or maximum deflection. The ballistic galvanometer is an integrator of $d\phi/dt$, where $d\phi/dt$ is the rate of change of lines of force through the search coil.

Analog computers have components which are excellent integrators and which are free from appreciable drift for periods of several minutes. Madey and Farly[1] have described an electronic circuit designed specifically to be used as an integrator to replace the ballistic galvanometer in measuring magnetic flux through a search coil. The same results have been achieved here by using operational amplifiers from the ORNL analog computer facility. A schematic diagram of the computer is shown in Fig. 4.

[1] R. Madey and G. Farly, *Rev. Sci. Instr.* **25**, 275 (1954).

UNCLASSIFIED
ORNL-LR-DWG 5808

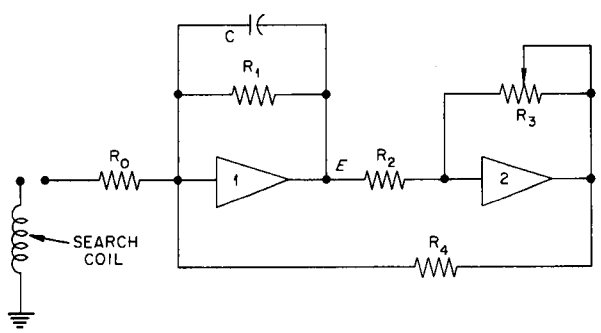

Fig. 4. Schematic Diagram of Computer.

The equation for E as a function of time is

$$(1)\quad \frac{dE}{dt} + \frac{1}{C}\left(\frac{1}{R_1} - \frac{R_3}{R_4 R_2}\right)E = \frac{N\dfrac{d\phi}{dt} \times 10^{-8}}{R_0 C} ,$$

where N is the number of turns on the search coil, and E is the output of operational amplifier No. 1. In practice, R_4 is made equal to R_1, and the ratio R_3/R_2 determines the gain G of amplifier No. 2. Equation 1 then becomes

$$(2)\quad \frac{dE}{dt} + \frac{1}{R_1 C}(1 - G)E = \frac{N\dfrac{d\phi}{dt} \times 10^{-8}}{R_0 C} .$$

If G is made equal to unity, then $E = A(\phi_2 - \phi_1)$; that is, E is proportional to the total change in lines threading the search coil. The term A is equal to $N \times 10^{-8}/R_0 C$, and, without calibration, E is determined directly in volts. Furthermore, after a transient in ϕ, E remains constant for a period of several minutes and changes only because of the amplifier drift, which is low.

In practice, G is made only slightly less than unity so that the time constant of the left side of Eq. 2 is of the order of ½ hr. For all practical purposes, then, an integrator is obtained which has an assured slow drift in E toward zero.

For one of the ARE magnetic clutches measured, lines of force through the search coil agreed within 1% with those calculated at design-point energization. Some remanent magnetism existed when the energizing current was removed. The experiments indicated that care should be taken to make certain that such clutches are of soft iron, since it is possible to have a set of operating conditions with other types of iron such that remanent magnetism could keep the clutch from opening.

LIQUID SCINTILLATION COUNTER FOR C^{14}

J. B. Davidson

A liquid scintillation counter for C^{14} employing automatic sample alternation was developed some time ago but was not previously reported. The instrument has a high degree of accuracy, comparable to that obtained with the vibrating-reed electrometer. An automatic sample changer is incorporated in the design to reduce the effects of instrument drift and background changes. This device allows three samples to be counted alternately for short intervals and the integrated counts for each sample to be stored on separate registers.

The detector is a 1P21 photomultiplier operated at liquid-nitrogen temperature. The phototube rests, base up, on the bottom of a 500-ml Dewar flask, with the cathode facing a $1\frac{1}{4} \times 2$ in. window in the side of the flask. The base of the phototube is partially removed until there is no mechanical connection with the glass envelope, except through the wire leads. Although part of the tube base is removed, it remains rigid and is easily plugged into the standard socket around which are wired the voltage-divider resistors. During operation these resistors are also at liquid-nitrogen temperature. Both the high-voltage and signal leads to the phototube are brought out to connectors mounted on the side of the sheet-brass housing.

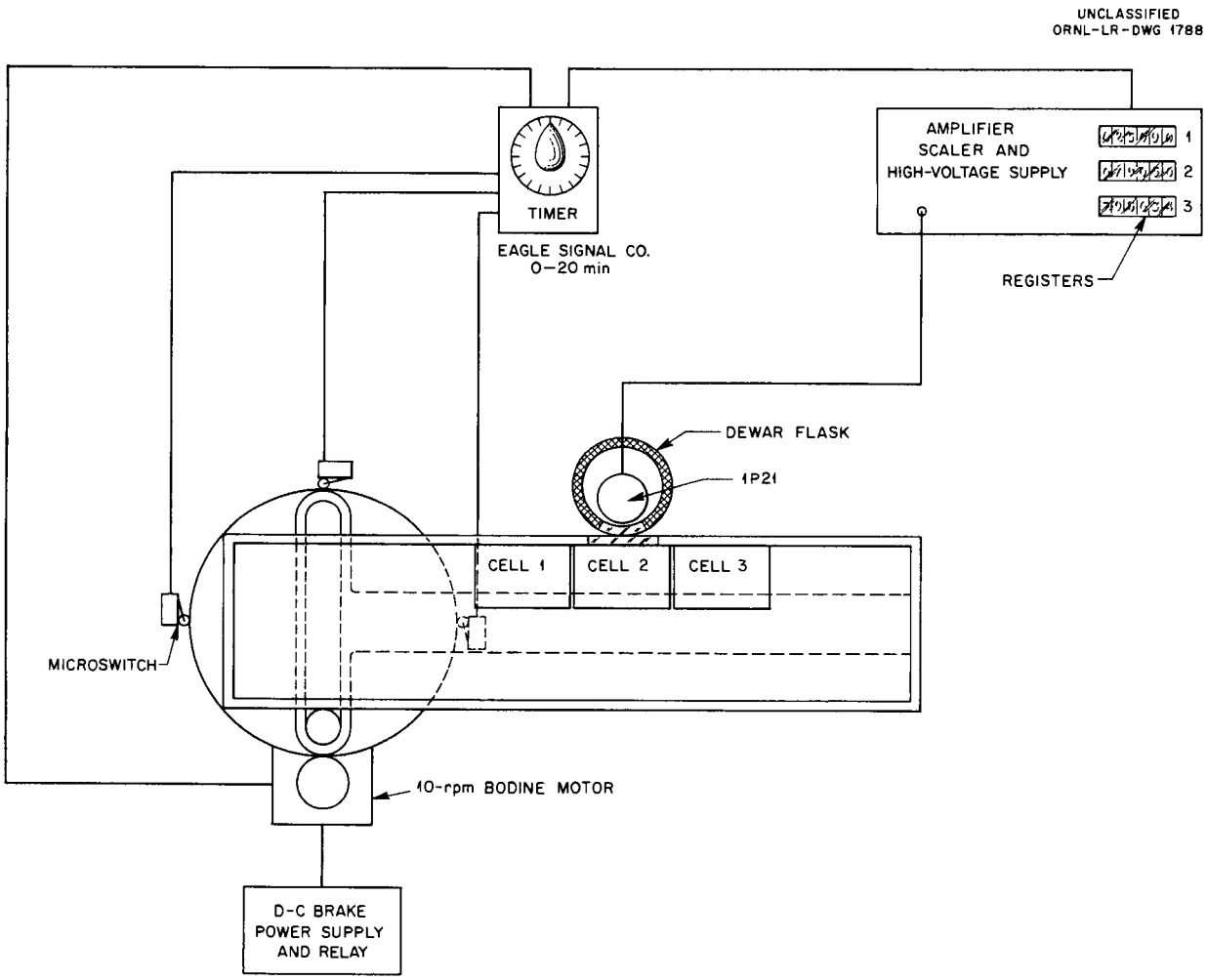

Fig. 5. Schematic Diagram of Liquid Automatic Scintillation Counter.

The phototube output is developed across a 15,000-ohm resistor and is fed directly to the input of the amplifier through a coaxial cable.

Since the desired measurements in many tracer studies are activity-level-above-background ratios of sample pairs, the alternating sample changer will count, in sequential cycles, the sample, the background, and the standard. Figure 5 is a schematic diagram of this system, which includes a carriage operated by a scotch yoke driven by a 10-rpm Bodine motor. Located inside the carriage housing are three dpdt microswitches that stop the motion of the carriage, position the cell being counted in front of the window, switch in the appropriate register, and start the timer. At the end of the timing period, which may be from 1 to 20 min, the carriage moves the next sample into place, and the timing cycle is repeated. In order to position the cells accurately and to prevent the carriage from coasting through a position without being counted, a d-c braking current is applied to the windings of the motor. The positioning of each sample in front of the window is reproducible to within approximately ±0.5 mm. By means of a panel-mounted switch, either two or three samples may be included in the counting cycle.

The cells used are standard, rectangular spectrophotometer cells of approximately 19-ml capacity. They are contained in removable holders which are held in position on the carriage by dowel pins. On the back of the holder is located an aluminum reflector. The dimensions of the window in the cell holder are several millimeters larger than those of the opening seen by the phototube, so that the geometry is essentially constant. The changer may be manually operated by setting the timer for a short interval, say 5 sec, then bringing the desired sample into position, and turning off the timer.

The counter proper is a Nuclear Instrument & Chemical Corp. model 162 proportional counter modified for improved signal-to-noise ratio and dynamic range when used with a beta proportional counter (see Fig. 6). The modified circuit was

Fig. 6. Liquid Scintillation Counter.

retained, except for the diode load at the input, which was replaced by the 15,000-ohm resistor. The high-voltage supply was rebuilt according to ORNL drawing Q-1144-1. This circuit was altered slightly to give 700 to 1400 v and was connected as a positive supply. The supply possesses excellent regulation and is free from tube selection, which was necessary in the original model 162 supply. Provision is made for monitoring the phototube voltage with a potentiometer. A switch, operated by means of the sliding door of the cell housing, removes the voltage from the phototube when the door is opened. The scaling-factor switch allows the selection of the factor that will store the maximum number of counts on the registers without exceeding their speed limitations.

The instrument has been used to measure the activity ratios of pairs of C^{14}-containing solutions (0.1-μc range). The results deviated from the mean and the calculated values by an average of approximately 0.5%, and the efficiency of the measurements was approximately 3%.

If this instrument were being developed at the present time, it would be designed to use newer end-window-type photomultipliers having larger, more efficient cathodes. This would improve the counting efficiency, perhaps by ten times, because it would be possible to obtain better optical geometry. In addition, these tubes would allow the use of dry ice or refrigerators for cooling, thereby eliminating the troublesome liquid-nitrogen cooling.

FISSION-CHAMBER PREAMPLIFIER

W. T. Adams

The remote location of the A-1 amplifier at some reactor installations necessitated the design of a pulse-type preamplifier capable of driving a long cable. The Q-1586 fission-chamber preamplifier has been designed for this purpose.

The basic circuit, Fig. 7, is essentially the same as that of the Q-1455 preamplifier designed by H. N. Wilson. However, since this application requires that the fission chamber be located up to 30 ft from the preamplifier, the input capacity is made quite high. Therefore, the input resistor R_1 has been reduced to 100,000 ohms to reduce the input time constant. The relative output as a function of input-resistor value is given in the list below; no great reduction in amplitude is indicated by using the 100,000 ohms of resistance, and the noise increase resulting from this is negligible compared with the inherent background of alpha pulses from the fission chamber.

R_1	Relative Output
100 megohms	1.0
100,000 ohms	0.9
10,000 ohms	0.4

In order to provide only one ground path for the signal, the preamplifier chassis is insulated from its support and is grounded at the fission chamber through the signal cable. A pulse transformer at the output of the preamplifier is used to isolate the signal ground from the chassis and to differentiate the pulse. The secondary winding is grounded through the signal cable at the A-1 amplifier input; Fig. 8 is a block diagram showing the two ground points.

Filament power is supplied to the instrument by a filament transformer on the preamplifier chassis. A floating d-c power supply, also remotely located from the preamplifier, provides the B+ voltage and chamber voltage. Each is decoupled at the preamplifier to minimize transients which might be picked up on the long cable.

Since the pulse is differentiated in the preamplifier, the differentiating capacitors at the input of the A-1 amplifier are shunted with a large capacitor so that they are relatively ineffective.

A typical fission pulse, as observed at the output of the A-1 amplifier with 1000 ft of cable between the preamplifier and the A-1 amplifier, is shown in Fig. 9.

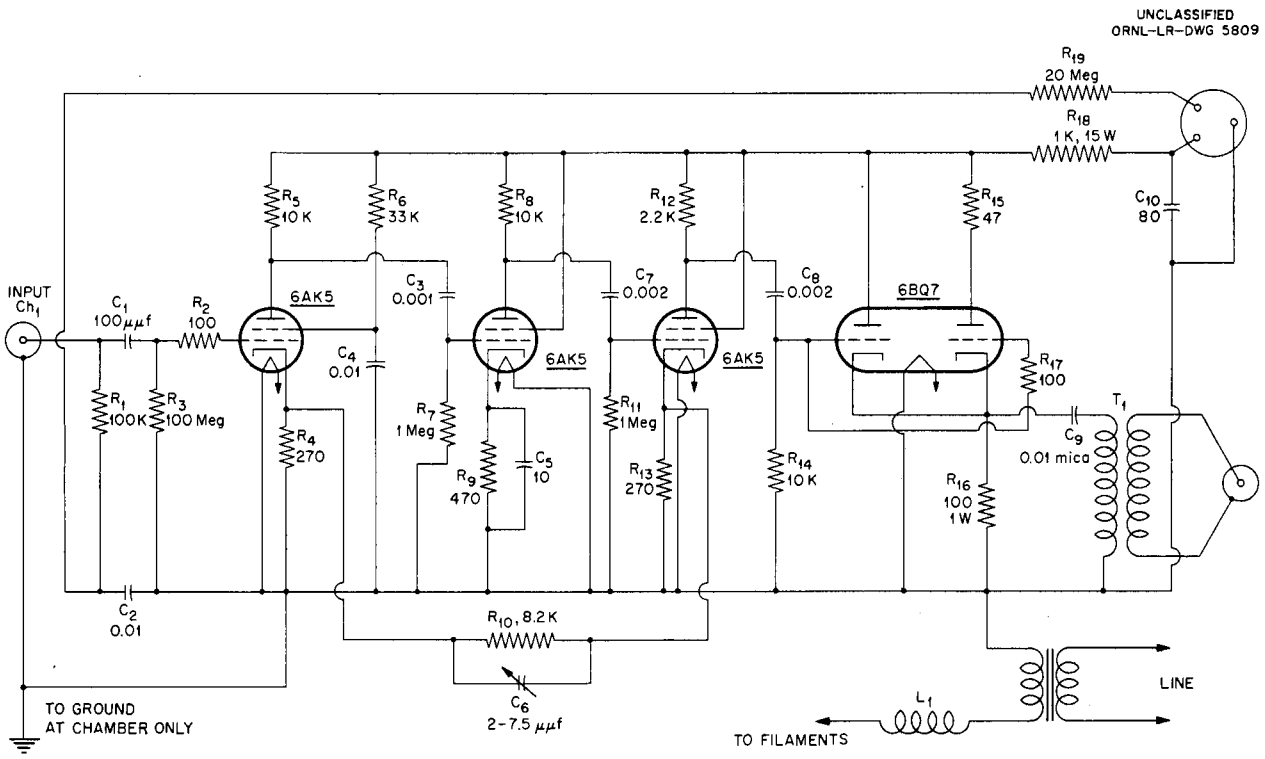

ALL CAPACITANCE VALUES NOT OTHERWISE SPECIFIED ARE IN MICROFARADS
ALL RESISTANCE VALUES NOT OTHERWISE SPECIFIED ARE IN OHMS

Fig. 7. Fission Chamber Preamplifier Circuit.

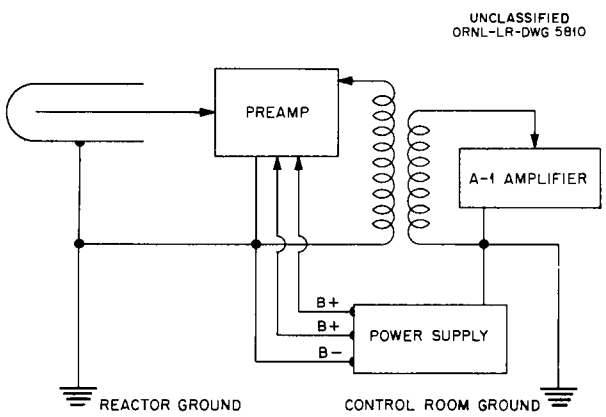

Fig. 8. Block Diagram of the Fission Chamber Amplifier System, Indicating Ground Points.

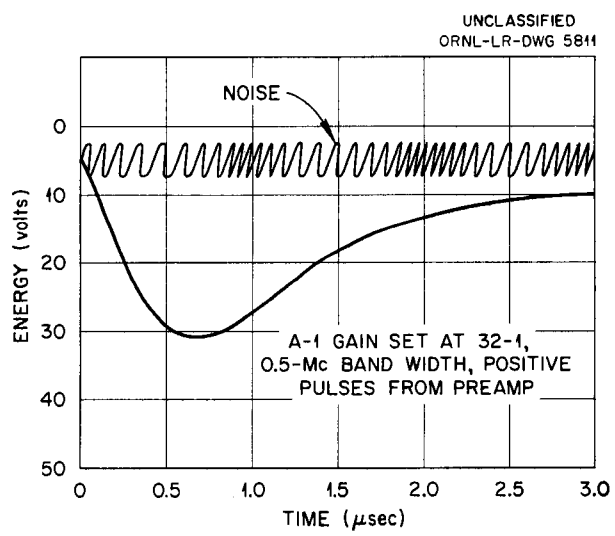

Fig. 9. Typical Fission-Pulse Curve.

SCALER DEVELOPMENT

H. N. Wilson

Work has been progressing on the redesign of scalers, with particular emphasis on true decade-type scalers. After an investigation of binary-scaler techniques, a meeting of interested persons resulted in the decision that merely improving the present binary scale of 64 was insufficient to meet current demands. The feeling was, however, that a need exists for a scaler having a higher scaling factor and a resolving time of the order of 1 μsec. Also, it was felt that a decade-type scaler is highly desirable. With these considerations in mind, several decade-type scaler tubes are being investigated. The tubes investigated so far are the Erricson GC-10B and GC-10D, the Phillips E1T, and the Burroughs MO-10. The results obtained from the Erricson gas-discharge tubes are good. The GC-10B and GC-10D tubes have upper limits of repetition rate of approximately 10 and 40 kc, respectively. Additional decade gas-discharge tubes for evaluation are on order from Sylvania. The Phillips E1T has been investigated, and, with reasonable associated circuitry, its upper limit is 100 kc. The circuitry associated with the tube is rather critical, and, since the speed of the tube is too slow for a good input stage, it is doubtful that the tube will be of use in this work. The Burroughs MO-10 has been investigated and is being used as an input scaler stage that has a resolving time of less than 1 μsec. Several Swedish Trocotron tubes have been received and are presently being investigated.

A decade-type scaler having a resolving time of 0.5 μsec and using the Burroughs beam-switching tube as the input decade has been designed, fabricated, and delivered to the High-Voltage Laboratory. The succeeding two stages use type GC-10/4B glow transfer tubes with their respective 12AU7 drivers. The maximum repetition rate at the input is 20,000 pulses/sec, limited only by the mechanical register. The instrument will accept pulses of either positive or negative polarity and is capable of remote operation in conjunction with data-taking equipment.

CREEP-TEST INSTRUMENTATION

J. L. Horton

The instrumentation for the Liquid-Metal Creep-Testing Laboratory has recently been completed. The installation provides temperature control and recording of 28 creep-test units. The Leeds & Northrup recording controllers will give a temperature control to ±1°C in the range from 500 to 1100°C. The controllers include amplifier "fail-safe" and thermocouple "failsafe" features as provided by the manufacturer. An annunciator with visual and audible alarms is installed in the system to indicate temperature deviations of 10°C. Multipoint recorders are available for the determination of temperature gradients on any specimen or for additional temperature checks. A 100-point L & N precision indicator is used to check all thermocouples, recorders, and controllers. The precision indicator is periodically compared with a laboratory standard potentiometer, thus ensuring accurate control and indication. The entire installation requires a total of 40 ft of control-panel space.

20-μsec VARIABLE DELAY (Q-1538)[1]

R. D. Sidnam

In the identification of decay schemes by delayed coincidence, there is a need for a variable delay with a short dead-time. This requirement precludes the use of linear-sweep pickoff systems and leaves only delay-line techniques as a likely method for delaying pulses.

Delay lines either are of a distributed type (delay cable, for example) or are lumped parameters of series inductance and shunt capacitance. The delay cable is well suited for delaying pulses when the amplitude must be accurately and smoothly reproduced. Delay cable, however, suffers from high attenuation and lack of bandwidth, especially over a large range of delays. A combination of fixed and variable delays was chosen to give the following ranges: a 10-μsec delay adjustable in 1-μsec steps, and a 1-μsec delay adjustable in 0.1-μsec steps. A fixed 10-μsec delay is used to increase the range to 20 μsec and is adjustable in 0.1-μsec steps. Commercially available, lumped-parameter delay lines were found that had sufficient bandwidth for this application.

The coincidence signals are brought in through terminals at A and B on the panel (see Fig. 10). The variable delay can be inserted in circuit A or B, and the delay signal can be brought out at either connector A or B. Both polarity input signals are accepted, and either polarity output is

[1]This particular design is an outgrowth of a similar instrument, developed by E. Fairstein, which employed distributed delay cable as the delay element.

UNCLASSIFIED
PHOTO 12387

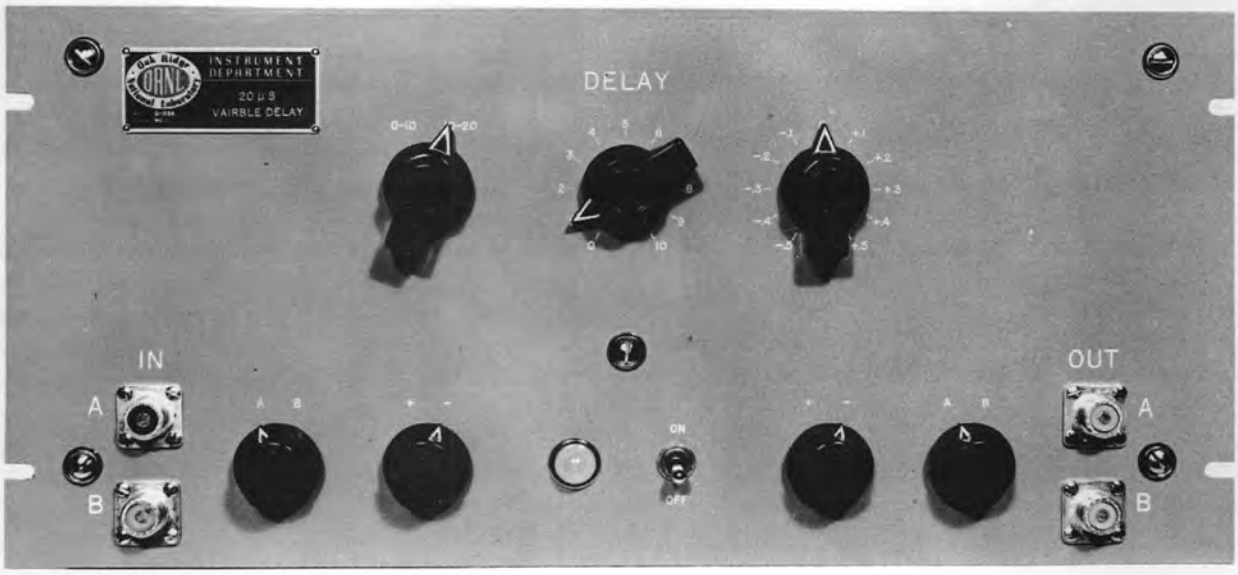

Fig. 10. Panel View of 20-μsec Variable Delay.

provided for the delayed signal. These provisions are for convenience only.

The accumulated delays of separate components such as detectors, amplifiers, cables, etc. can be made equal at any point (probably the coincidence circuit), within ±0.05 μsec, by adjusting the 1-μsec variable delay. This is accomplished by placing a fixed 0.5-μsec delay in the undelayed circuit and 0.5 μsec of the variable 1-μsec delay in the variable delayed circuit; an adjustment of ±0.5 μsec to an accuracy of ±0.05 μsec is thus made available.

The circuitry contains an inverter shaper stage to provide a positive differentiated trigger for the delay-line driver, which normalizes all input pulses placed on the delay line. A pulse shaper stage is triggered by the delayed pulse at the termination of the delay line. The output driver stage provides a low output impedance and requires a termination of 1000 ohms. The delay-line pulse is positive and independent of the input pulse size and shape. This is necessary because the delay is measured at 50% signal amplitude, the point at which the pulse shaper is set to trigger. A positive signal is also used so that the pulse shaper input grid may be biased below cutoff and not be affected by line noise. The output voltage is approximately 25 v when the line is terminated in the 1000-ohm load. The instrument is complete, with a regulated supply contained on the chassis.

AUTOMATIC DATA RECORDER

F. M. Glass

The automatic data recorder was designed to monitor and record, with a single counting-rate meter, the pulse rates from six different radiation sources by the use of one single-pen strip-chart recorder.

Each of the six channels of this instrument is monitored for a total of 2 min, beginning with the first channel and following in sequence. Information is recorded for each channel in the following manner:

1. The strip chart of the recorder is coded for a period of 40 sec, the recorder pen drawing a straight line on the chart at a given location, thus indicating the channel number.

2. The range selector automatically selects the correct range for the counting-rate meter from a total of six ranges, which allows the instrument to give significant information. This is accomplished by a series of stepping operations in which a bidirectional stepping relay is used in conjunction with a meter-type relay connected in the counting-rate meter output circuit.

3. After the correct range has been selected, the device codes the recorder chart for an additional 40 sec, drawing another straight line at the proper position on the chart to indicate the range being used.

4. In the next sequence the counting rate is recorded for another 40 sec (this time the recorder pen follows the counting-rate fluctuations) and, at the end of the period, the device automatically indexes to the next input channel; the cycle is then repeated. Hence, coding of the strip chart consists in moving the pen in definite paths to indicate the various functions of the instrument during its operation.

NEUTRON DOSIMETER PULSE INTEGRATOR

F. M. Glass

The pulse integrator for the neutron dosimeter was built to supersede the model Q-1179 dual-channel dosimeter. The new model contains four channels instead of two and uses the binary system of weighing and integrating the pulses. It contains 13 discriminators feeding into the four binary chains, each chain having a scale factor of 32. The discriminators are set for mid-channel amplitudes of 8, 12, 16, 24, 28, 32, 40, 48, 56, 80, and 96 v, respectively. They are fed into the binary chains so as to produce one count in the storage system for each 4 v of signal amplitude. For example, a 32-v pulse is fed into a scale of eight and produces eight binary indications.

The outputs from the four scales of eight are mixed, after sufficient coincidence preventative delays, and are fed into a scale of 32,000, giving an over-all storage capacity of 1,056,000 counts. The device has been in service for approximately three months and is operating satisfactorily.

MODIFICATIONS TO THE ORACLE

E. W. Burdette

Auxiliary Memory

Construction and installation of the auxiliary memory system for the Oracle are nearing completion. The system is composed of four magnetic-tape transports operating as a nonvolatile memory for information storage in the Oracle (see Fig. 11).

The average access time of the magnetic-tape memory is approximately 14 ms. Starting time of the tape from rest to its terminal speed of 47 in./sec is 5 ms, requiring $\frac{1}{8}$ in. of tape for acceleration. Stopping time from full speed to rest position requires 2 ms and $\frac{1}{16}$ in. of tape for the deceleration process. Storage capacity is 3×10^6 machine words (each word containing 40 binary bits) or 750,000 words per unit, with a packing density of 100 words per inch. This packing density may be increased to 200 words per inch to make the total capacity 6×10^6 machine words.

The type of tape used is Kodapak IV, with a 5-mil base and a 1-mil red iron oxide coating. The tape is 2 in. in width and 1200 ft in length per unit. Each tape contains 42 recording channels, with 40 channels used to store the 40-bit machine word, one channel for word counting, and the remaining channel for parity checking.

Parity Checking System

A parity check (odd-even type) has been installed in the Oracle. With this system all information entering or leaving the machine is constantly checked for machine errors. The check consists of an electronic method of storing a binary bit along with each Oracle word and subsequently comparing the sum of the digits in the word with the bit each time a word is used. When an error is indicated, a signal is produced that stops the computer and warns the operator.

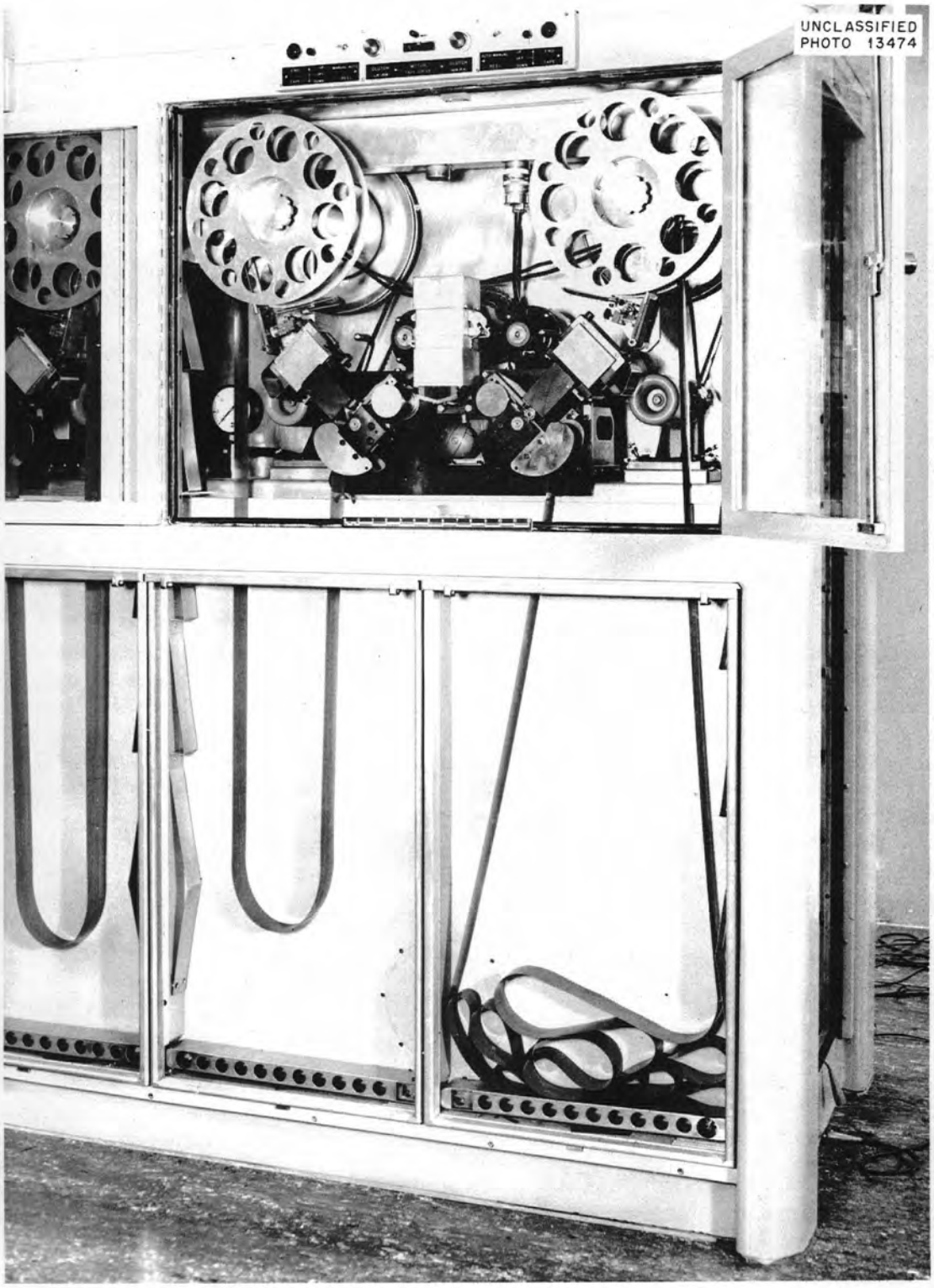

Fig. 11. Magnetic-Tape Drive Unit.

DOUBLE-LINE LINEAR AMPLIFIER

E. Fairstein

A double-delay-line linear amplifier known as the model DD2 has been developed for use with scintillation spectrometers, and a number are now being produced. The expected characteristics of the DD2 were first given in a quarterly report.[1] The amplifier was designed to permit the measurement of low-intensity, low-energy spectra in the presence of a high-intensity, high-energy background. This characteristic is achieved partly by the method of pulse shaping and partly by the type of amplifier circuitry used.

An oscillogram of a typical output pulse is shown in Fig. 12, and a circuit of the amplifier appears in Fig. 13. This oscillogram was obtained by using a DD1 amplifier, an earlier version of the DD2. The primary pulse width of the new amplifier has been increased to 1.2 μsec, but the pulse shape is otherwise unchanged.

Figure 14 shows a performance comparison between the complete DD1, the DD1 with one line removed, and an early model A-1 amplifier. The highest energy peak shown was from a 60-cps pulse generator modulated by a noise source so that its output approximated that of a detector with a resolution of 6%. The output of a sodium iodide scintillation detector with a Co^{60} source of adjustable intensity was mixed with the pulse-generator signal. This mixing technique was used as a means of separating the effects of the amplifier and the detector on the shape of the spectrum. The pulse-generator peak shows the performance of only the amplifier and the discriminator, while the lower-energy peaks show the performance of the amplifier, the discriminator, and the photomultiplier. From these experiments the following conclusions were evident:

1. At high counting rates there is a definite decrease in photomultiplier output, which, in this case, is due to IR drop in the collector-load resistance.

2. Double-line pulse shaping eliminates energy-axis shifts in the amplifier and discriminator at high counting rates.

3. Double-line pulse shaping reduces resolution loss at high counting rates.

The pulse-generator peak width is different in each of the three graphs at the bottom of the figure. This is not due to the amplifier characteristics but to the shortcomings of the pulse generator used, which made it difficult to duplicate widths after changes had been made in the output setting. The resolution of the Co^{60} peaks provides a better comparison of amplifier characteristics with respect to resolution.

The above results indicate the effects of high counting rate only. The effects of high counting rate plus high amplitude overload are shown in Fig. 15. The peaks in this case represent the 32-kev x-ray photoelectric peak present in a Cs^{137} source. The integral counting rate, measured at a threshold of 15 kev, is 2000 cps. A series of Co^{60} sources was used as a background. The two groups of graphs show a comparison between the DD2 and the A1D amplifiers. The A1D is a modified version of the A-1 and has considerably improved overload characteristics. Even so, it is evident that the DD2 can be used with about 10 times higher counting rate for a given loss in resolution.

The circuit differs from convention in two important respects: (1) three stages of amplification are used within the feedback loop, and (2) the grid resistors are much smaller than the preceding plate-load resistors. Stability against oscillation is obtained by causing two of the stages to have a much greater bandwidth than the third. Freedom from blocking is obtained through the use of low-value grid resistors, which result in a coupling time constant nearly independent of grid current.

Because of the manner in which the stage gains are proportioned, it is possible to make the current-swing in the second tube of the feedback group

[1] E. Fairstein, *Instrument Research and Development Quar. Prog. Rep. Jan. 20, 1952*, ORNL-1335, p 12.

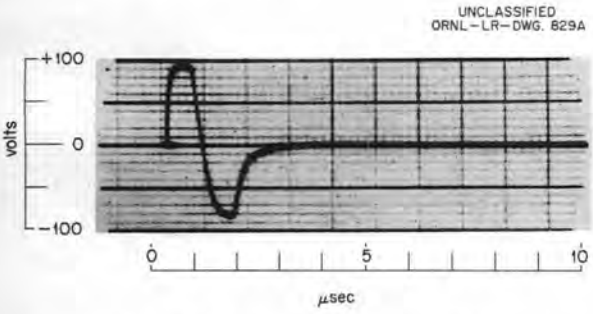

Fig. 12. Output Pulse Shape from DD-1 Amplifier.

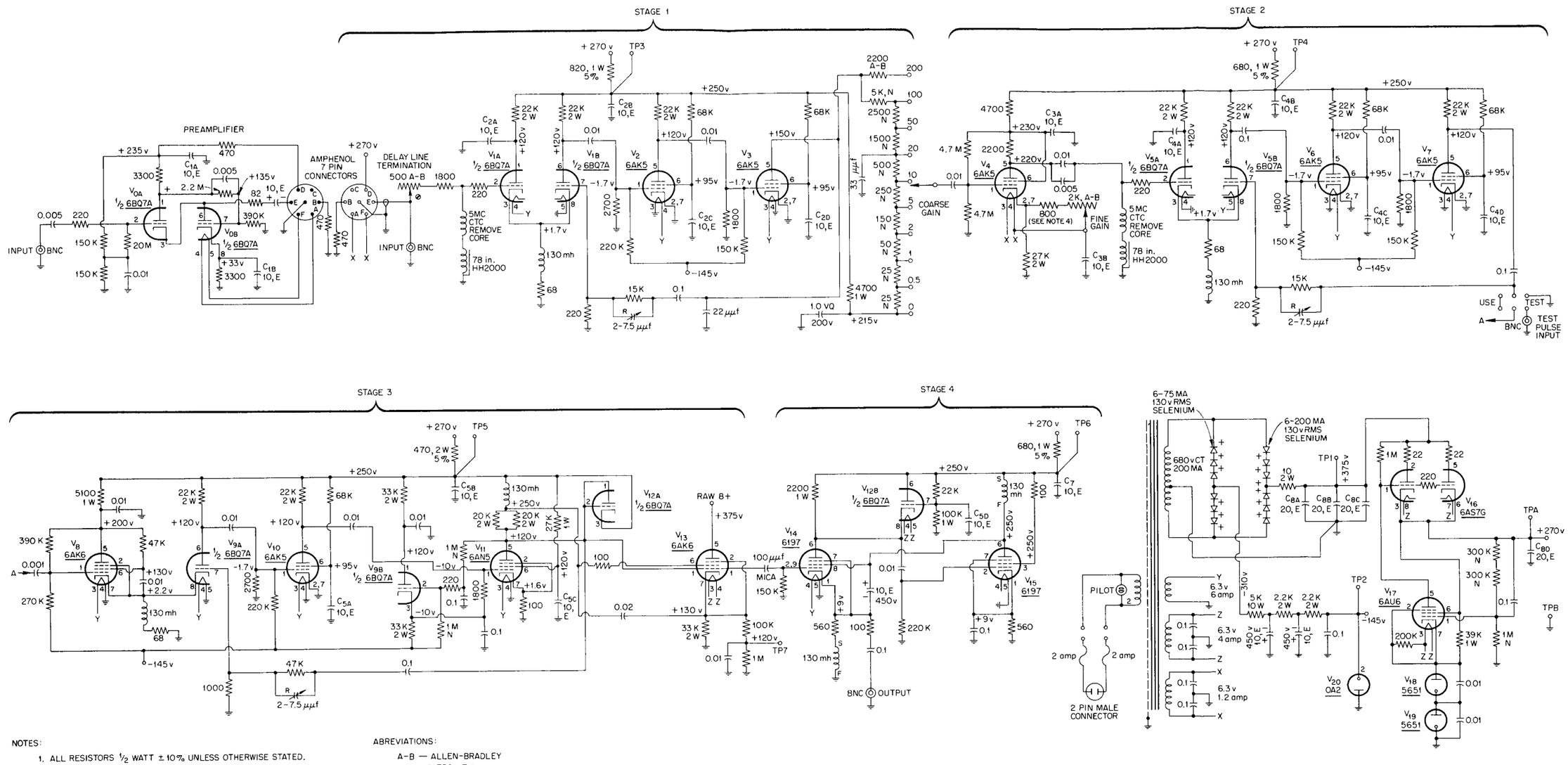

NOTES:

1. ALL RESISTORS ½ WATT ± 10% UNLESS OTHERWISE STATED.
2. ALL CAPACITORS CERAMIC UNLESS OTHERWISE STATED.
3. ALL CAPACITANCES IN MICROFARADS UNLESS OTHERWISE STATED.
4. ADJUST TO 0.40 × RESISTANCE OF FINE GAIN CONTROL.
5. C_1 THRU C_8 — 450 WV.

ABREVIATIONS:

A-B — ALLEN-BRADLEY
E — ELECTROLYTIC
N — NOBLELOY ± 1%
R — ROTOR
CTC — CAMBRIDGE THERMIONIC CORP.
TP — TEST POINT
VQ — SPRAGUE VITAMIN Q

Fig. 13. Circuit of Double-Line Linear Amplifier.

UNCLASSIFIED
ORNL-LR-DWG 722A

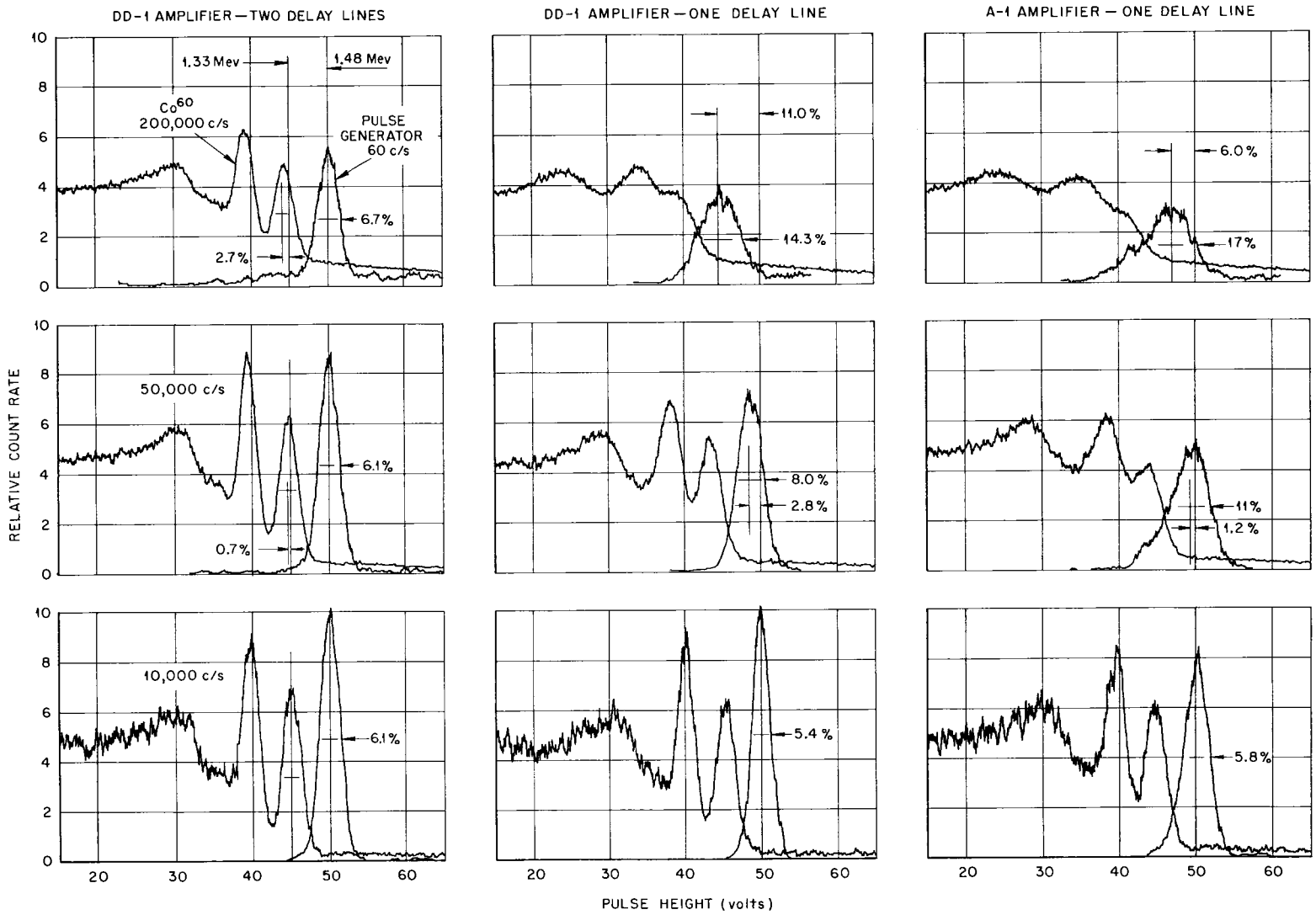

Fig. 14. Performance Comparison Curves.

equal and opposite to that in the third. This technique results in distortion cancellation, giving a linearity improvement of 10 times over that of the conventional circuit. For this reason it is possible to have a usable gain control range of 1000 to 1 with a nonlinearity not exceeding 1.5% at 100 v output for any setting of the gain controls.

It should be noted that choke coils were used liberally throughout the amplifier to act as constant current sources. Their use makes possible the elimination of a high-current negative power supply that was necessary in the DD1 version.

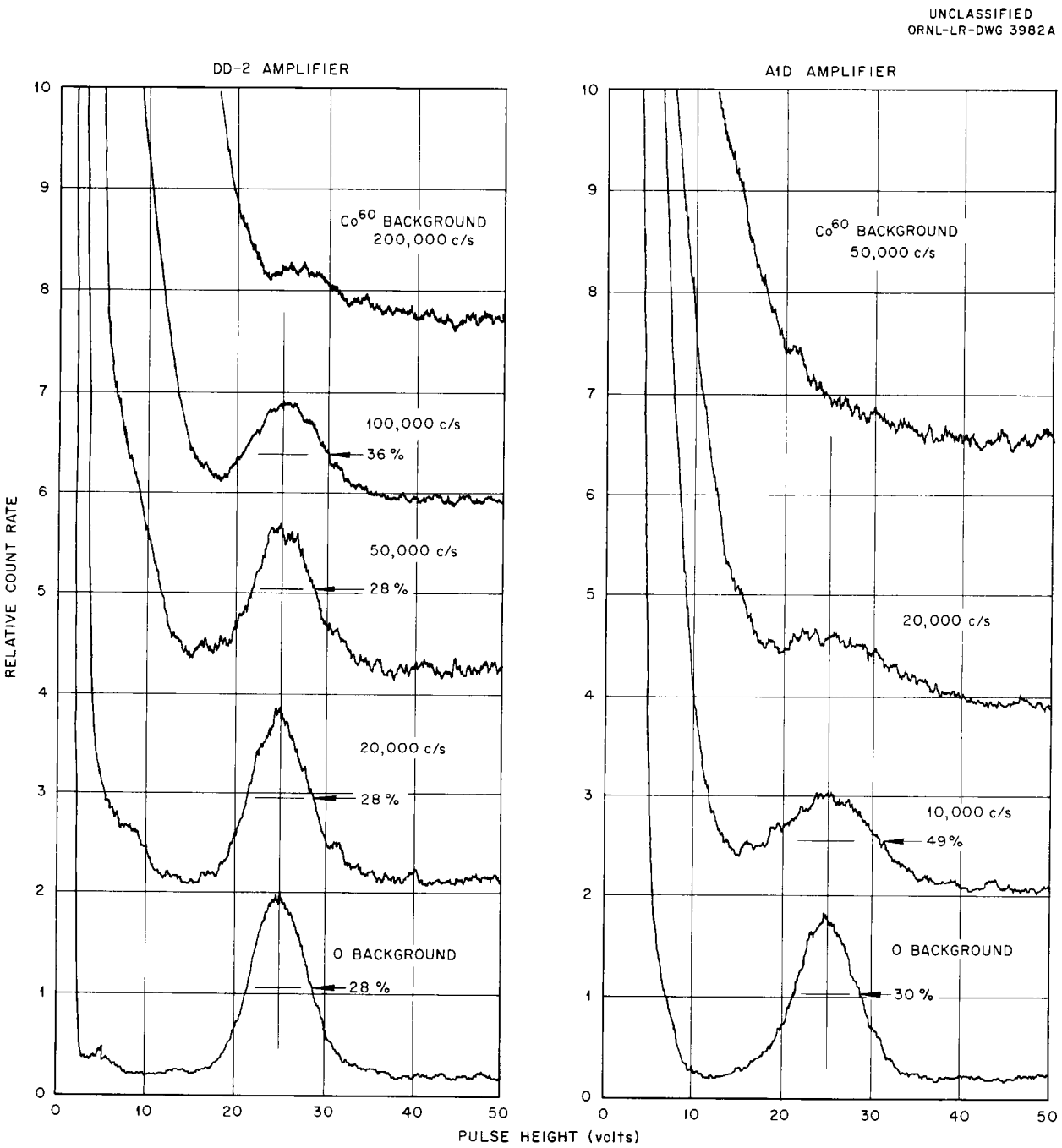

Fig. 15. Amplifier Overload Characteristics; High Counting Rate and High Amplitude.

PROPORTIONAL-COUNTER ACTION AT LOW PRESSURE

R. E. Zedler

For a recently proposed application it was necessary to determine the possibility of producing a proportional counter that would operate at 1 mm pressure, or less. Further, it was necessary that the counter perform satisfactorily at a gas amplification factor of approximately 10^4 in order to detect pulses (using the A-1 amplifier and A1-A preamplifier) initiated by only a few electrons.

Satisfactory counter performance was achieved with both isobutane and amyl acetate as the filling gas at 1 mm pressure, and less, for a wide variety of anode diameters, from 0.003 to 0.250 in., and brass cathodes of $1\frac{15}{16}$ and $2\frac{15}{16}$ in. ID. The influence of these counter parameters on the gas amplification voltage relationship is shown in Fig. 16. The values of gas amplification given should be within a constant factor of 2 or 3 of the absolute values.

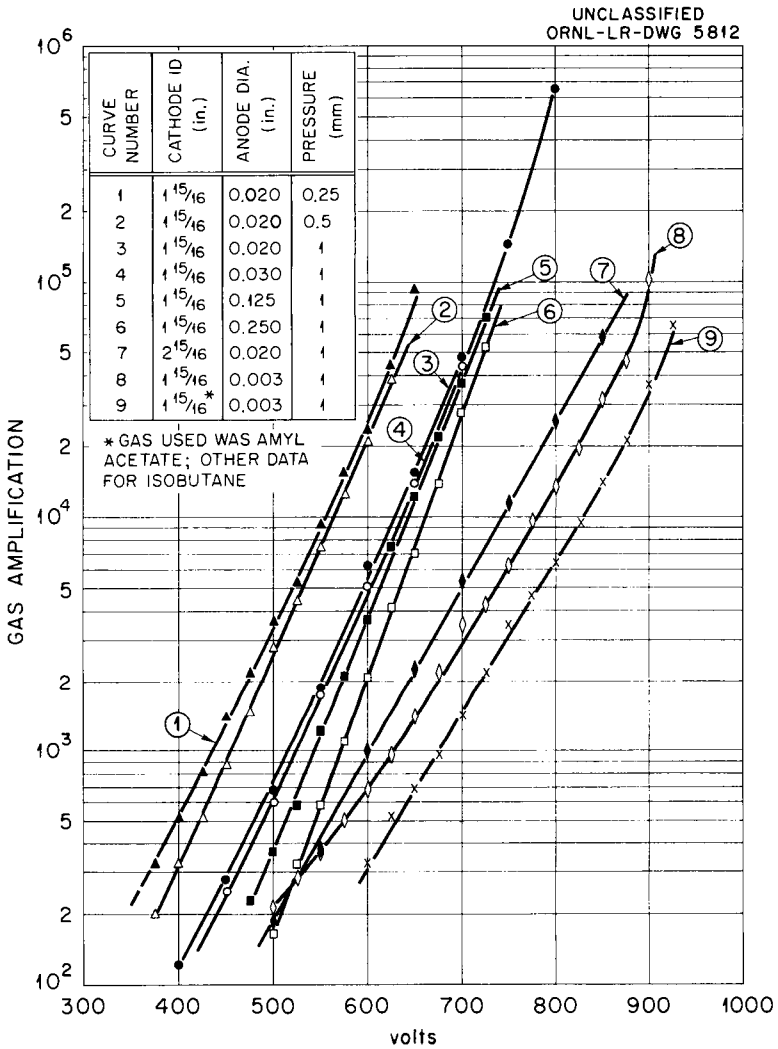

Fig. 16. Gas Amplification vs Voltage Relationships.

CHARACTERISTICS OF THE ANTON NO. 106 HALOGEN-QUENCHED GEIGER COUNTER

R. E. Zedler

The halogen-quenched Geiger counter (900 v) possesses several unique properties that should make it useful as a beta-gamma radiation survey detector. These properties are: an infinite life, unchanging response over a large temperature range (–50 to +75°C), the ability to survive continuous discharging without any permanent change in response, and large current output per pulse at the operating voltage.

In order to evaluate the potential use of the counter, with simple circuitry, as an integrating type of radiation monitor, the counter characteristics were measured. Measurements were made at different counter voltages and several different counting rates to determine the effect of these variables on current output. The results appear in Fig. 17. Counter voltages were measured with an electrostatic voltmeter connected to the counter anode and cathode. The current was determined by measuring the potential drop across a 10-megohm resistor from cathode to ground with the use of a Senior Volt Ohmyst having 11 megohms of input resistance. A 1-μf oil-filled condenser paralleling the 10 megohms served to reduce statistical fluctuations.

The counting-rate-vs-voltage data also were taken. Between 900 and 950 v the plateau slope was approximately 2% per 100 v, and between 850 and 1000 v the slope was about 6% per 100 v. The variation of pulse height (observed with a Tektronix oscilloscope) with voltage was determined by using a 2.2-megohm resistor from the counter anode to the high-voltage supply. The results are given in Fig. 18.

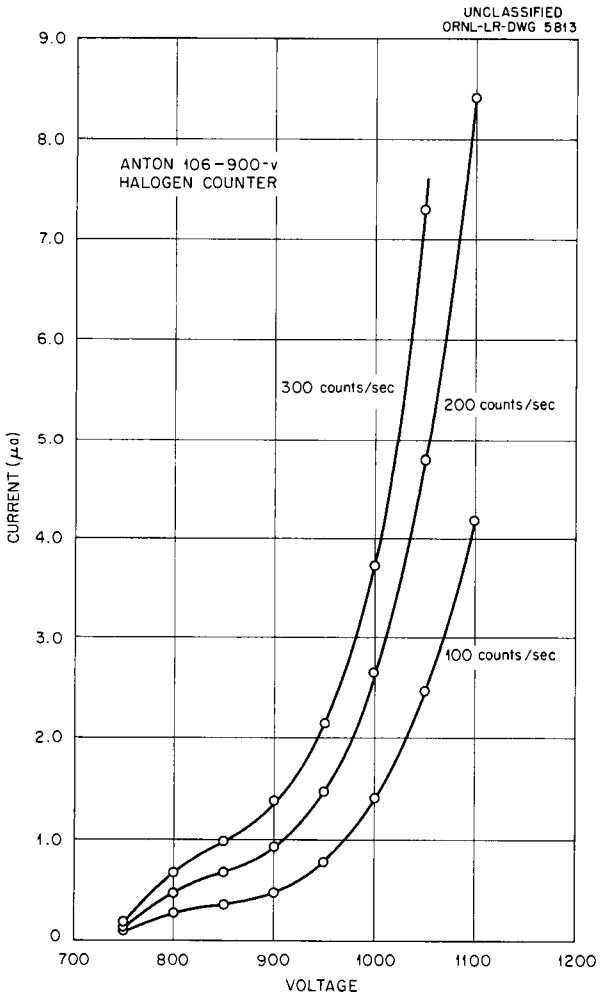

Fig. 17. Counter Characteristics.

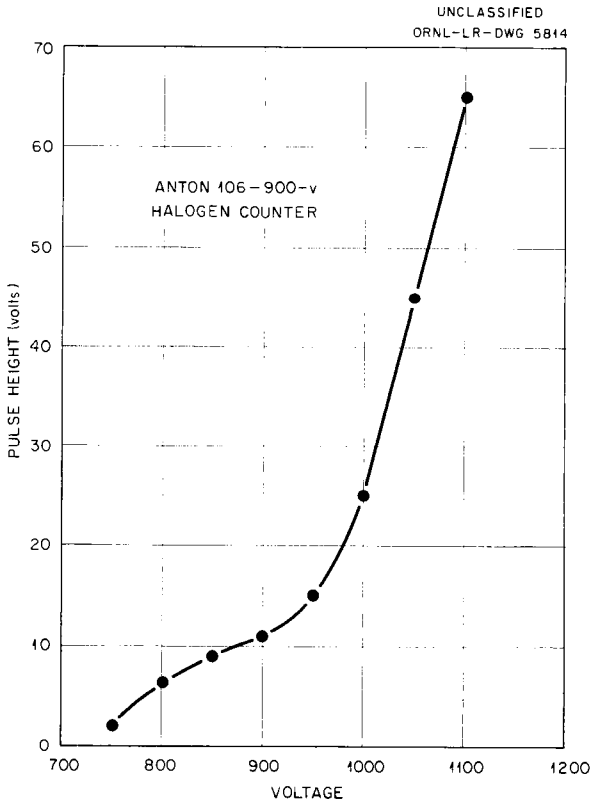

Fig. 18. Pulse-Height Variations vs Counter Voltage.

Because of the appreciable currents involved at high counting rates, a significant voltage drop will occur across the anode resistance and result in a decreased counter voltage. Unless provision is made to maintain the counter voltage constant, the current output of the counter with increased counting rate will be much less than that anticipated from the current-vs-count-rate data.

It should be noted that the current output does not vary linearly with the radiation level. The dead-time of the counter is about 100 μsec. At low counting rates, where virtually no counting losses occur, the rate would be expected to be approximately 50 cps/mr/hr (for a shielded radium source). Because of the dead-time, the counting loss (and consequently loss in current output) at, for example, a radiation level of 20 mr/hr, would be 10%. Another reduction in expected current output occurs because more and more counts occur during the counter recovery time as the counting rate increases. Hence, these pulses will be smaller than those normally produced.