[redacted]

OAK RIDGE NATIONAL LABORATORY LIBRARY
3 4456 0022242 6

TRAL RESEARCH LIBRARY
OCUMENT COLLECTION

Inv 57

Inv 59

Inv 56

Inv 59

Inv 59

AEC RESEARCH AND DEVELOPMENT REPORT

ORNL-1749
Progress
5a

DECLASSIFIED
CLASSIFICATION CHANGED TO:
BY AUTHORITY OF: AEC 4-2-61
BY: R. O. Williams 6/8/61

INSTRUMENTATION AND CONTROLS DIVISION

SEMIANNUAL PROGRESS REPORT

FOR PERIOD ENDING JANUARY 31, 1954

OAK RIDGE NATIONAL LABORATORY
CENTRAL RESEARCH LIBRARY
CIRCULATION SECTION
4500N ROOM 175
LIBRARY LOAN COPY
DO NOT TRANSFER TO ANOTHER PERSON.
If you wish someone else to see this report, send in name with report and the library will arrange a loan.
ORNL-118 (6-97)

OAK RIDGE NATIONAL LABORATORY
OPERATED BY
CARBIDE AND CARBON CHEMICALS COMPANY
A DIVISION OF UNION CARBIDE AND CARBON CORPORATION
UCC
POST OFFICE BOX P
OAK RIDGE, TENNESSEE

[redacted]

[redacted]

[redacted]

ORNL 1749

Th d m t t f 25 p g
C py 5 of 179 p Se A

Cont t No W 7405 e g 26

INSTRUMENTATION AND CONTROLS DIVISION

SEMIANNUAL PROGRESS REPORT

for Period Ending January 31 1954

C J Borkowski Director

DATE ISSUED

JAN 31 1955

OAK RIDGE NATIONAL LABORATORY
Ope ted by
CARBIDE AND CARBON CHEMICALS COMPANY
A D v f U C bid d C bo C po t
Po t Off Bo P
O k R dg T e

[redacted]

[redacted]

3 4456 0022242 6

[redacted]

INTERNAL DISTRIBUTION

1 C E Center
2 Biology Library
3 Health Physics Library
4 6 Central Research Library
7 Reactor Experimental Engineering Library
8 12 Laboratory Records Department
13 Laboratory Records ORNL R C
14 C E Larson
15 S Cromer
16 L B Emlet (K 25)
17 J P Murray (Y 12)
18 A M Weinberg
19 E H Taylor
20 E J Murphy
21 E D Shipley
22 C S Harrill
23 F C VonderLage
24 W H Jordan
25 J A Swartout
26 S C Lind
27 F L Culler
28 A H Snell
29 A Hollaender
30 M T Kelley
31 K Z Morgan
32 T A Lincoln
33 A S Householder
34 C E Winters
35 D W Cardwell
36 E M King
37 G E Boyd
38 W J Ladniak
39 P R Bell
40 C J Borkowski
41 G S Hurst
42 R S Livingston
43 E E Fairstein
44 J W Morfitt
45 C W Sheppard
46 W G Stone
47 D D Cowen
48 C P Keim
49 C D Susano
50 P M Reyling
51 G C Williams
52 M J Skinner
53 54 J V Francis
55 R W Johnson
56 D J Fisher
57 E G Struxness
58 J R McNally Jr
59 J L Gabbard
60 R A Charpie

EXTERNAL DISTRIBUTION

61 Aircraft Laboratory (WADC)
62 AF Plant Representative Seattle
63 AF Plant Representative Wood Ridge
64 American Machine and Foundry Company
65 ANP Project Office Fort Worth
66 68 Argonne National Laboratory
69 Armed Forces Special Weapons Project (Sandia)
70 Army Chemical Center
71 73 Atomic Energy Commission Washington
74 Babcock and Wilcox Company
75 Battelle Memorial Institute
76 Bendix Aviation Corporation
77 80 Bettis Plant (WAPD)
81 82 Brookhaven National Laboratory
83 Bureau of Mines Salt Lake City

[redacted]

[redacted]

84	Bureau of Ships
85 86	Carbide and Carbon Chemicals Company (C 31 Plant)
87 88	Carbide and Carbon Chemicals Company (K 25 Plant)
89	Chicago Patent Group
90	Chief of Naval Research
91	Columbia University (Failla)
92	Columbia University (Havens)
93	Commonwealth Edison Company
94	Detroit Edison Company
95	Dow Chemical Company (Rocky Flats)
96 98	duPont Company Augusta
99	Duquesne Light Company
100	Engineer Research and Development Laboratories
101	Foster Wheeler Corporation
102 105	General Electric Company (ANPD)
106	General Electric Company (APS)
107 110	General Electric Company Richland
111 112	Goodyear Atomic Corporation
113	Hanford Operations Office
114	Headquarters Air Force Special Weapons Center
115	Iowa State College
116	Kaiser Engineers
117 118	Knolls Atomic Power Laboratory
119 120	Los Alamos Scientific Laboratory
121	Mallinckrodt Chemical Works
122	Massachusetts Institute of Technology (Evans)
123	Monsanto Chemical Company
124 125	Mound Laboratory
126	National Advisory Committee for Aeronautics Cleveland
127	National Bureau of Standards
128	National Lead Company Inc (Winchester)
129	National Lead Company of Ohio
130	Naval Medical Research Institute
131 132	Naval Research Laboratory
133	New Brunswick Laboratory
134	Newport News Shipbuilding and Dry Dock Company
135	New York Operations Office
136 137	North American Aviation Inc
138	Nuclear Metals Inc
139	Pacific Northwest Power Group
140	Patent Branch Washington
141	Pennsylvania Power and Light Company
142 145	Phillips Petroleum Company (NRTS)
146	Powerplant Laboratory (WADC)
147	Pratt & Whitney Aircraft Division (Fox Project)
148	Public Health Service
149	USAF Project Rand
150	Sandia Corporation
151 152	U S Geological Survey
153	U S Naval Radiological Defense Laboratory
154	UCLA Medical Research Laboratory

[redacted]

[redacted]

155 156 University of California Radiation Laboratory Berkeley
157 158 University of California Radiation Laboratory Livermore
159 160 University of Rochester
161 Vitro Engineering Division
162 Western Reserve University (Friedell)
163 Yale University
164 178 Technical Information Service Oak Ridge
179 Division of Research and Medicine AEC ORO

[redacted]

[redacted]

CONTENTS

PROCESS INSTRUMENTATION FOR THE TOWER SHIELDING FACILITY 1
- General 1
- Crew Compartment and Positioning Controls 3
- Radiation Detectors 4
- Preamplifier and Remote Electrometer 7
- Control House Instrumentation 8
- Automatic Isodose Plotter 9
- Weather Instrumentation 10
- Visual Indication of TSF Functions 12

INSTRUMENTATION FOR FLUORIDE DYNAMIC CORROSION LOOPS 13

HRE CORROSION EXPERIMENT INSTRUMENTATION – LITR HOLE HB 6 17

INSTRUMENTATION FOR UNIT OPERATIONS EXTRACTION COLUMNS 18

[redacted]

[redacted]

INSTRUMENTATION AND CONTROLS DIVISION SEMIANNUAL PROGRESS REPORT

PROCESS INSTRUMENTATION FOR THE TOWER SHIELDING FACILITY

D M Collier
J L Horton
K H Kline
D J Knowles
W S McBee
F W Manning
L A Meeks
T F Sliski
H J Stripling Jr
J R Tallackson
D D Walker
H N Wilson

GENERAL

The Tower Shielding Facility was constructed for the purpose of making practicable the general study of shielding [1] In order that the shield may be tested without spurious effects resulting from ground and structural scattering the facility is designed so that a low power reactor with its shield and a separate crew compartment can be raised as much as 200 ft above the ground thus rapid full scale tests on a large number of shielding configurations are possible A simplified drawing of the facility is shown in Fig 1

The underground control house is located between the northmost pair of towers as shown in Fig 1 It will house all the operating personnel the reactor control apparatus and most of the radiation measuring equipment In general the radiation detecting elements (ionization chambers fission chambers etc) and their associated preamplifiers are located at the reactor or within the crew compartment the remaining measuring instruments are in the control house The necessary connections between the detector heads and the terminal equipment are provided by means of cables that are fed through conduit from the control house to the instrumentation platform and are suspended between the platform and the crew compartment or the reactor tank This manner of stringing the cables does not limit the flexibility of movement of the two suspended bodies and it does permit the shortest cable length consistent with the proposed modes of operation Nevertheless over 500 ft of cable is required to connect the detector heads to the terminal equipment

In a number of the proposed experiments both the crew compartment and the reactor tank will be filled with water which will thus constitute part of the shielding In order to investigate various asymmetric shield designs the experimenter can move the reactor about inside the reactor tank and move the detector head within the crew compartment These movements must be made by remote operation from the control house so that excessive time is not required for any series of tests Therefore remote positioning controls and position indicators inside the control house are necessary

Since shields are designed primarily for the protection of personnel almost all the measurements will be of the type which provides dosage information Alpha and beta radiations are rapidly attenuated and present little problem as far as shielding is concerned Thermal neutrons do not form a severe hazard because of the high human tolerance for them and because of the ease with which they can be absorbed by a boron film Therefore the major experimental measurements will be those of gamma and fast neutron dosages although certain supplemental thermal neutron measurements will be necessary [2]

From the description of the general aims and appearance of the TSF it is apparent that the instrumentation and controls present some new and unique problems First there are the problems resulting from the spatial distribution of the components of the measuring system The necessity of driving 500 ft of cable has been troublesome especially for pulse measurements and has required a new preamplifier design Extreme care must be exercised in order to prevent noise or

[1] E P Blizard C E Clifford J L Meem R H Ritchie and A Simon *Proposal for a Divided Shield Testing Facility* ORNL CF 52 4 85 (April 18 1952) C E Clifford and L S Abbott *The Tower Shielding Facility Safeguard Report* ORNL 1550 (June 9 1953)

[2] C G Goss K H Kline R K Abele F W Manning J R Tallackson and J E Owens *Instrumentation and Reactor Controls for the Tower Shielding Facility* ORNL CF 52 3 243 (March 15 1952)

[redacted]

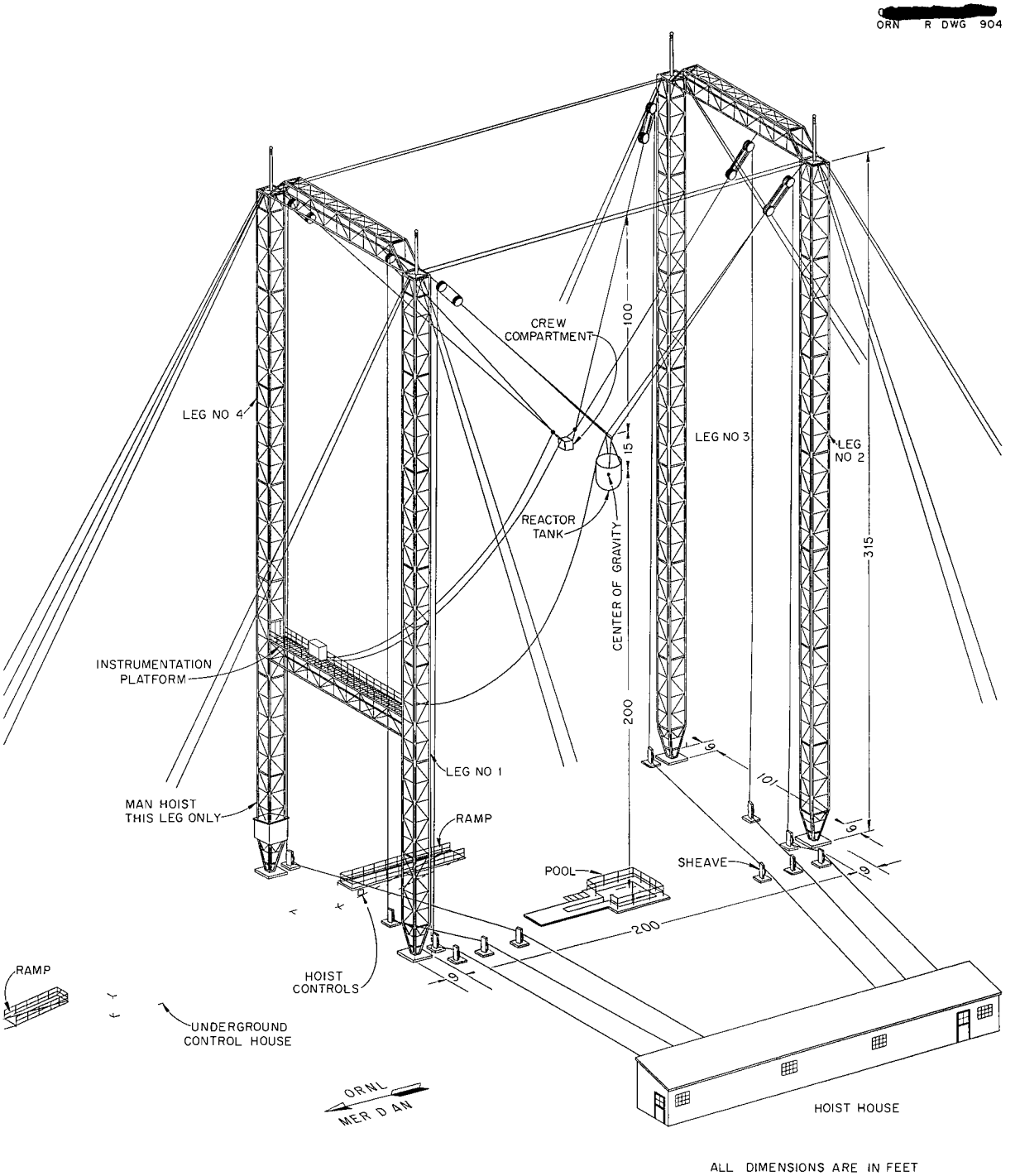

Fig 1 Structure of Tower Shielding Facility

interference pickup in this length of the cable Also the spatial separation makes it necessary to have equipment for remote position control and indication Second there is the problem of designing at least part of the equipment to work underwater outdoors and high above the ground In addition to solving the usual counting and monitoring problems it is necessary to protect the system from lightning to provide weather instruments to design compact chambers and preamplifiers for underwater operation and to devise methods of cable suspension and termination

Several special devices are needed for the TSF among which are a sensitive fast neutron dosimeter and an automatic isodose plotter Limitations on the reactor power together with the great attenuation expected with the divided shield have necessitated the development of a more sensitive fast neutron dosimeter than the ones previously in use The other special device is the isodose plotter In order to regulate the position of the detector head from a remote control point drive motors and position indicators are required By going a step further in the design it is possible to close the loop thus connecting the positioning equipment to the measuring equipment in such a way that contours of constant dosage level within the water shield of the crew compartment can be plotted automatically The operator simply selects a given counting rate and the desired plane of investigation (that is *XY* *XZ* or *YZ*) The isodose plotter then causes the detector head to follow this counting rate in the desired plane and plots the path of the detector on a Variplotter a two dimension recorder Experience at the Bulk Shielding Facility and other shielding test facilities indicates that the isodose plotter will be a highly desirable time saving device

CREW COMPARTMENT AND POSITIONING CONTROLS

The crew compartment in which radiation intensity patterns are to be determined is a rectangular steel box as shown in Fig 2 It has inside dimensions of 60 × 60 in a depth of 96 in and is constructed of $\frac{3}{4}$ in mild steel plate Since this wall thickness would cause excessive absorption in some experiments openings were cut in all four sides and in the bottom of the tank Quarter inch steel plates were then welded into the openings thus adequate structural strength is

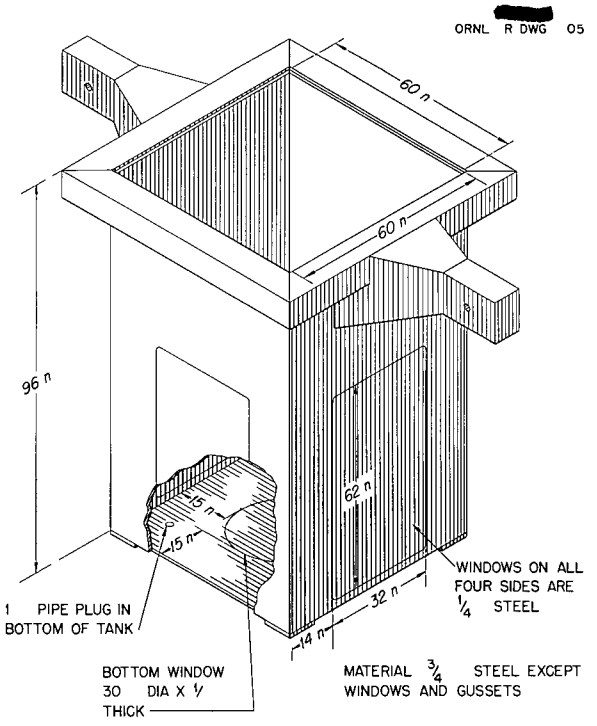

Fig 2 Crew Compartment of Tower Shielding Facility

furnished and absorption of radiation is reduced Provision is made for the insertion of other shielding materials in the tank as may be required The top edges of the tank are reinforced by a square frame of structural angle iron and this framework supports the detector head positioner which is shown in Fig 3

The positioner unit provides four coordinates of motion namely *X* *Y* *Z* and θ where θ is the angular rotation of the counter in a horizontal plane (rotational axis vertical) The orientation of the rectangular coordinate system is given in Fig 3 Since ball bearing lead screws provide highly efficient and economical torque multiplication without requiring multiple gear reduction they are used to transmit power to the *X* and *Y* coordinates Motion in the *Z* direction is provided by a rack and pinion drive The *Z* axis member which connects directly to the various detector heads consists of a vertical sleeve constructed of 3 in tubing with $\frac{1}{2}$ in wall thickness Rack teeth are cut directly into the sleeve for the required length of travel Detector rotation with respect to the θ axis is provided by a shaft that

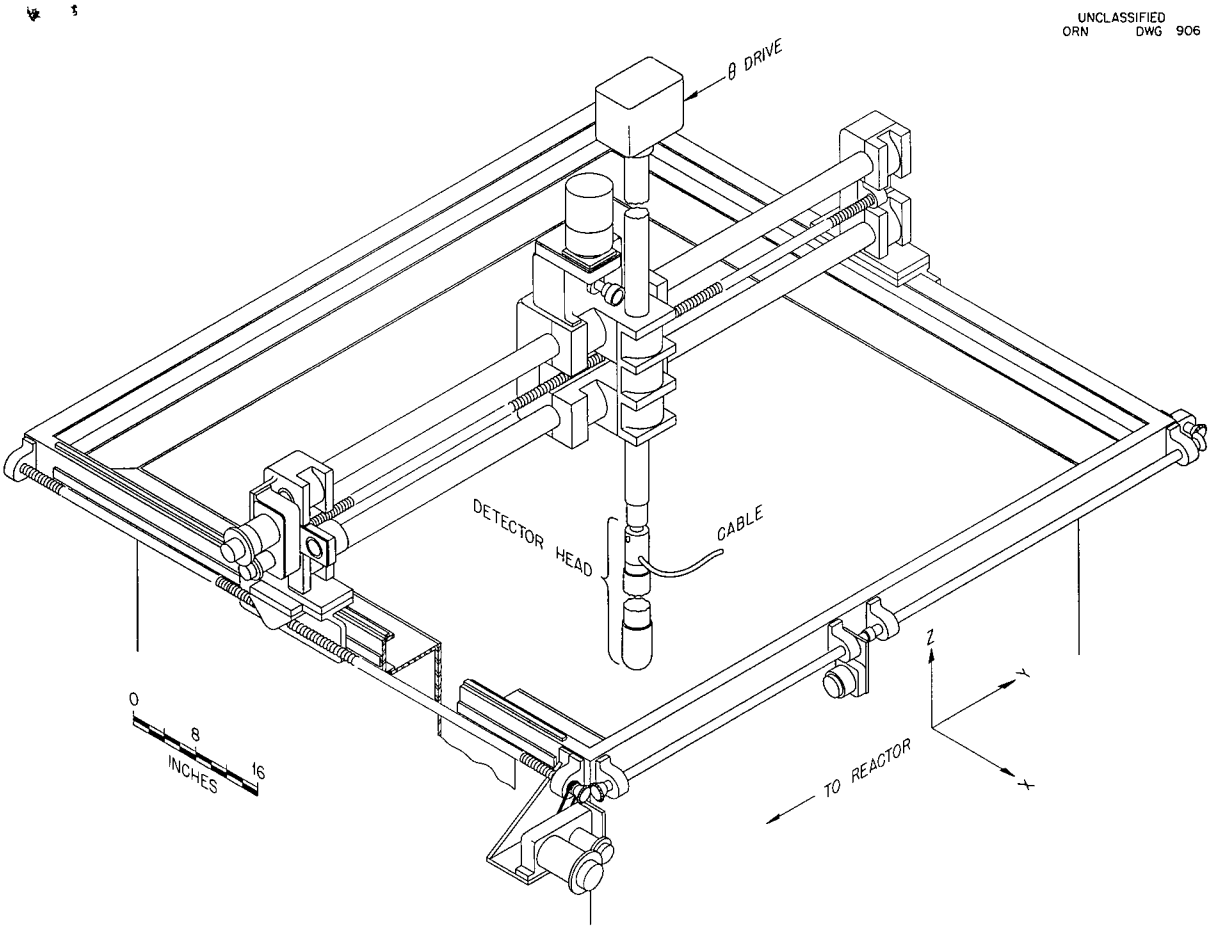

Fig 3 Detector Head Positioner Carriage

rotates inside the vertical sleeve

Remote position indication and remote control of all coordinates are accomplished by a system of motors and synchros The drive motors are a c servomotors In order that positioning information in the control house be accurate to within ±2 mm coarse and fine synchros are used to indicate the exact position of the detector head with respect to the X Y and Z coordinate axes Limit switches are included to provide reference points and slip clutches on all motors prevent damage to the equipment as the result of overloads

RADIATION DETECTORS

In order to satisfy the unusual conditions imposed by the operating environment a complete new set of radiation detector assemblies is being designed and constructed for the TSF Eight different detectors are proposed for the measurement of gamma and neutron dosages Each detection element will be used to probe remotely all parts of the water filled crew compartment a mode of operation which established the following design requirements

1 Each detector must be completely surrounded by water or by a water equivalent material Therefore an 8 in plastic separator is inserted between the detection element and its supporting structure in order to minimize the effects of voids and metals in the support

2 The preamplifier or the input electrometer tube should be located as close as possible to the detector in order to provide a good signal to noise ratio to permit reasonable values of input time constant and generally to facilitate driving 500 ft of cable

3 The entire assembly including the cables must be weatherproof furthermore the first 40 ft of cable as well as the detector head must be capable of operating under water

4 Minimum over all diameters are necessary so that the detector may probe into the tank corners and as close as possible to the walls

5 All material around the counter must be removable during calibration but it must be easily replaced and watertight

In addition to the preceding requirements care must be taken both to protect the instruments from damage due to lightning and to avoid ground loops in the instrument circuitry A counterpoise of heavy copper conductors connected to the tower legs and buried in the ground is sufficient to protect the tower structure from lightning Furthermore heavy copper conductors which are insulated from the tower structure itself and connected to the counterpoise are supported above the guy wires and above the rectangular area between the four tower legs These conductors will be adequate to prevent the tower and its suspended loads from receiving direct lightning strokes In order to protect the instruments from secondary strokes (that is the voltages induced by the large flow of current resulting from direct strokes) all instrument cables have an over all copper braid that is connected to the counterpoise and is insulated from the other conductors in the cable for 5000 v surges of 1 min duration In addition lightning arresters are used wherever they do not interfere with accurate measurement Thus to provide lightning protection it is necessary that each part of the structure and the exterior shields on all cables be connected to the counterpoise or station ground by heavy conductors however ground loops in the instrument circuit may cause spurious counts and/or erroneous pulse heights It is therefore necessary to insulate the instruments from the station ground in order that the existence of only one ground connection may be assured For this reason there is a separate instrument ground which can be left floating This arrangement permits tying instrument ground to station ground at the point which is most advantageous to accurate measurement while still protecting the equipment from damage due to atmospheric electricity Additional measures are taken to protect the operating personnel

Radiation detector heads (that is assemblies) of the general construction shown in Figs 4 and 5 have been evolved to conform to the above requirements Figure 4 is an exploded view of a 50 cc ion chamber while Fig 5 is a photograph of an assembled 900 cc ion chamber both chambers measure gamma dosage Note that the detector element is placed at one end of a plastic separator a cylinder approximately 3 in in diameter and 8 in long The opposite end of the separator fits into a 9 in length of metal tubing which connects in turn to a coupling The metal tubing provides sufficient space to accommodate the electrical connectors and the preamplifier or the first electrometer tube whichever the detector element requires A coupling of the type shown in Figs 4 and 5 is used on each detector head to connect the assembly to the positioner unit and to terminate a length of 1 in plastic tubing The plastic tubing acts as a waterproof jacket which encloses (1) the conductors that carry voltages to the detector and preamplifier or electrometer (2) the cables that transmit the signals to the control house (3) the small tubings that supply gas to the flow type counters (4) the gas line that pressurizes the entire assembly against water leakage and (5) an over all copper braid for lightning protection The other end of this plastic tubing which is approximately 40 ft long connects to a junction box that is located on one side of the crew tank This junction box is one terminus of the aerial cable and contains all necessary gas tanks pressure regulators drying equipment and connectors as well as a small power supply for the preamplifier

In addition to the two ion chambers shown in Figs 4 and 5 the set of detector elements includes a scintillation counter a neutron dosimeter a high sensitivity neutron dosimeter a fission chamber and a neutron detector employing multiple BF_3 counters An additional instrument a scintillation counter with a rotating absorber wheel has also been designed The perimeter of the absorber wheel contains lead disks each of a different thickness These disks may be successively rotated in front of the scintillation counter crystal The absorber wheel in conjunction with the other controllable parameters of the system provides a means of obtaining various shielding data Remote indication and control of the wheel rotation are provided

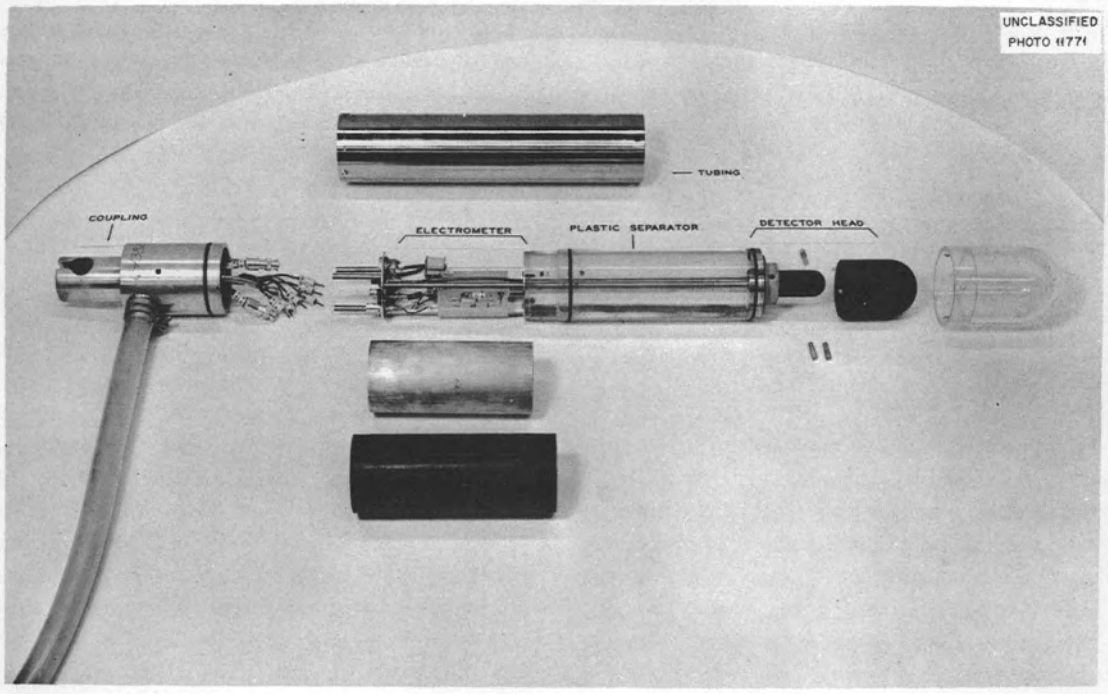

Fig. 4. Exploded View of 50-cc Ion Chamber.

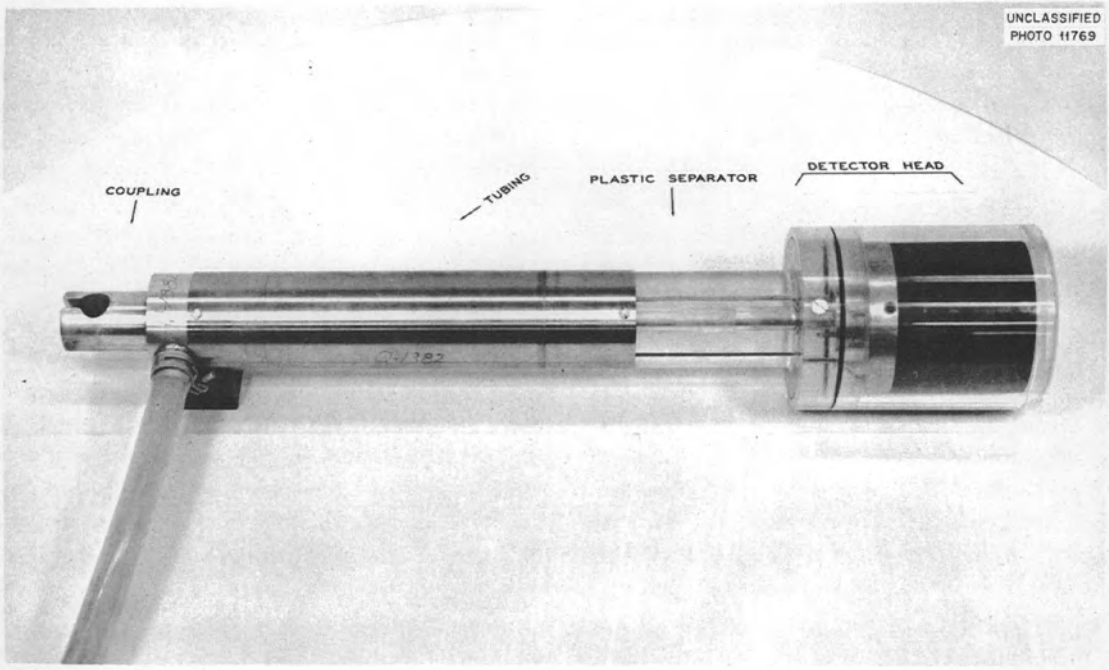

Fig. 5. Assembled 900-cc Ion Chamber.

PREAMPLIFIER AND REMOTE ELECTROMETER

The preamplifier and the remote electrometer which were designed for the TSF are shown in Fig. 6. Each electronic input unit is packaged so that it fits into a 3-in.-dia cylinder that is as short as is feasible. This construction allows the unit to be mounted quite near the detector element without impeding the movement of the detector head in any way. A brass tube encloses each electronic assembly and provides electrostatic shielding. Since the chassis of the electronic unit and the brass shield are connected to the instrument ground, an insulating jacket of Bakelite is necessary to ensure isolation of the instrument ground from station ground. An over-all tubing of stainless steel, connected to station ground, provides strength, some degree of magnetic shielding, and a watertight container for the electronic assembly. An electrometer input unit mounted on the plastic separator is shown in Fig. 4. Also shown are the various tubings which nest within each other and enclose the unit.

The electrometer is designed in accordance with usual practices at this laboratory.[3] With 500 ft of cable between the detector element and the input resistor (10^{10} ohms) of the electrometer, the cable capacity (21 $\mu\mu f$/ft) would lead to prohibitive values of input time constant. Furthermore, leakage in the cables or connectors would shunt the input resistor, resulting in erroneous measurements. The input to the electrometer must therefore be located near the detector element. A relay is included in the input assembly to facilitate remote operation. A 10^9-ohm resistor is placed in series with the input grid to protect the electrometer tube in the event that a positive pulse somehow gets on the input lead, either as the result of lightning or of any other eventuality. The remainder of the circuitry is quite similar to that of the model Q-826-A remote electrometer. Only the input tube, the relay, the 10^9-ohm resistor discussed above, a 10^{10}-ohm resistor, and a filament-biasing resistor are included in the remote input unit. The remainder of the electrometer is located in the control house, where the input circuit is duplicated so that the electrometer may be used for both local and remote operation. Provision is made to connect a calibrated bucking voltage and a galvanometer on the main chasis so that the electrometer may be used as a null-balance device. Since the measurement is dc, no major innovations have been necessary because of the long cable.

[3] F. M. Glass, *Nucleonics* 10, No. 2, 36 (1952).

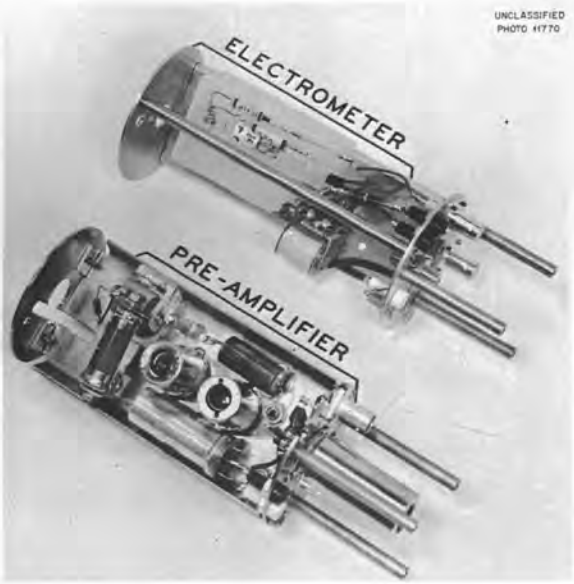

Fig. 6. Preamplifier and Remote Electrometer.

In the case of pulse measurements, the presence of the cable between the detector and the main amplifier places requirements on the preamplifier that are somewhat more stringent than normal. In order to avoid multiple reflections of the pulses, the cable must be terminated in its characteristic impedance at both ends. The cable which has been selected is RG-59/U, with a characteristic impedance of 73 ohms. Pulse reflections that result from impedance mismatch could lead to serious errors when pulses of small amplitude are being counted. As is the case for any preamplifier, the unit must have a linear amplitude response, constant gain, and a high signal-to-noise ratio. The present design uses only R-C differentiation, incorporated in the preamplifier rather than in the main amplifier. Furthermore, to lighten the burden of the output tube, the output pulse is positive instead of negative as is customary. The main amplifiers are readily modified to accommodate these changes.

The preamplifier, shown in Fig. 6, consists of four tubes, three 6AK5's followed by a 6BQ7. The first two stages are very similar to the existing A1-A design. Because of the low value of plate

resistance the third stage acts primarily as a phase inverter although a little gain is realized Differentiation takes place between the third and fourth stages The fourth and final tube acts as a cathode follower with both halves of the 6BQ7 connected in parallel It can handle a differential signal as large as 1 v although in actual practice the maximum signal is ½ v or less The output impedance is less than 100 ohms about as low as is possible when the 6BQ7 is used in a standard circuit An exact match to the cable impedance could be obtained either by making a more complex design for the output stage or by using a higher impedance cable such as RG 62/U Space considerations and reliability of operation dictate that the output circuit be kept as simple as possible furthermore cables which are subject to vibration and flexure have a rather high level of noise [4] and the noise level is especially high in the case of cables with semisolid insulation Unfortunately all cables which are readily available commercially and which have a characteristic impedance higher than 75 ohms have semisolid insulation Therefore the lower characteristic impedance of RG 59/U was accepted as being preferable either to the greater noise of a cable with semisolid insulation or to having a special high impedance cable constructed with solid insulation Extensive tests indicate that the slight mismatch between the preamplifier impedance and the cable impedance causes so little distortion that it is not discernible to the main amplifier

The final innovation necessitated by the remote operation is a special regulated power supply for the preamplifier In order to reduce the number of conductors between the control house and the crew compartment a small power supply that can be mounted directly on the side of the crew tank has been built This supply requires only the usual 110 v a c power and provides both heater and plate voltages to the preamplifier Since the supply is relatively near its load the problem of IR drop in long lines is eliminated

CONTROL HOUSE INSTRUMENTATION

Before the remaining measuring instruments are discussed a brief review of the measurement philosophy and technique is in order

It is generally accepted that a fast neutron in tissue produces its chief damage by knocking protons out of hydrogen atoms The heavy protons having strong ionizing properties produce considerable local damage before their kinetic energy is dissipated The fast neutron dosimeter utilizes the phenomenon of recoil protons knocked from hydrocarbons to measure the reaction of fast neutrons on tissue The dosimeter is a proportional counter tube lined with polyethylene filled with ethylene gas and designed so as to maximize the size of pulses from proton recoil and to minimize the pulse size from gamma radiation [5] The proportional counter pulses are amplified in the preamplifier described above and transmitted down the cable to an A1 linear amplifier (Q 541) The pulses are then sent to an integrator where a function of pulse height is multiplied by the number of pulses thus producing an output count that is directly proportional to dosage [6] Each integrator consists of a model Q 1179 B pulse sorter that feeds two model Q 1010 scalers that have been modified to receive the output of the pulse sorter

As in the measurement of fast neutrons the gamma detectors are selected to be approximately tissue equivalent The ionization chambers illustrated in Figs 4 and 5 are used for high intensity gamma measurements and for calibration A scintillation counter in which an anthracene crystal and 5819 photomultiplier tube are used is another gamma dosage detector one which overlaps much of the useful ionization chamber range and extends to far lower intensities as well With the crystal counter provision is made both to feed pulses into a preamplifier and to measure the d c plate current of the photomultiplier tube For measurement of low intensity gamma dosage the pulses go from the preamplifier to the amplifier integrator system described above At high counting rates the plate current of the photomultiplier tube can be measured by using electrometer techniques In addition the gain of the photomultiplier can be varied by changing the value of high voltage applied to the tube and the crystal size may be changed to give greater or less sensitivity When all these variations are utilized the scintillation counter becomes an extremely wide range instrument

In addition to the above described measurements of fast neutron and gamma dosages several supple

[4] T A Perls *J Appl Phys* 23 674 (1952)

[5] G S Hurst R H Ritchie and H N Wilson *Rev Sci Instr* 22 981 (1951)

[6] F M Glass nd G S Hurst *Rev Sci Instr* 23 67 (1952)

mental measurements are planned In order to obtain additional information useful in shield design energy spectrum measurements can be made by using a Q 1192 differential pulse height analyzer in conjunction with a NaI(Tl) or anthracene crystal counter a preamplifier and an A1 amplifier For all pulse measurements provision is made for the A1 amplifier to drive a logarithmic count rate meter of a new design (Q 1454A) which records counting rate information on a Brown recorder Similarly the electrometer has an output from which a recorder may be driven

Various thermal neutron measurements will be made A high sensitivity BF_3 detector or a fission chamber may be used with the preamplifier an A1 amplifier and two scalers together with a Q 1513 timer (preset time or count) to measure the thermal neutron intensity at any point within the crew compartment Counting room equipment for foil measurements is also being developed to map the flux in reactors of the BSF type A 0 020 in dia cobalt wire may be inserted along the vertical axis of each fuel element and in the lattice between elements The length of each wire is sufficient to cover the total length of each element After the wire has been irradiated in the reactor for a known period of time it is withdrawn and the activity of Co^{60} is measured with a NaI(Tl) scintillation counter The scintillation counter feeds in succession a preamplifier amplifier single channel analyzer (adjusted to read the 1 38 Mev photoelectric peak of Co^{60}) count rate meter and recorder The wire is moved on a motor driven carriage past an aperture under the counter crystal The recorder chart driven at a proportionate speed then plots the counting rate as a function of vertical distance from the top of the fuel element By means of numerous such wires exposed in known positions throughout the reactor a three dimensional plot of average flux density of the reactor can be obtained Correlation with other measurements made by using indium foils is readily obtainable by means of a series of calibrations in which indium foils and cobalt wires are exposed simultaneously

Numerous auxiliary instruments are provided The principal instrument for survey monitoring by the Health Physics Division is the ORNL type Q 1154 remote monitron that records both gamma and thermal neutron irradiation A fast neutron dosimeter will be used periodically to determine the ratio of the gamma and slow neutron dosage to the fast neutron dosage In addition various portable survey instruments are available Weather data will also be provided in the control house wind direction and velocity air temperature at the bottom of the tower and at the top of the tower and humidity will be recorded on the control panel [7] Finally since a means of directly viewing the two suspended bodies from within the control house would present a radiation hazard during operation visual contact is maintained by means of an industrial television link A two camera arrangement permits constant monitoring of the reactor position and the position of the crew compartment with respect to the reactor In the event that gusty winds for example cause the reactor to sway excessively both the weather instruments and the visual indication warn the operator that the reactor must be lowered The visual indication is also helpful in lowering the reactor into its pool [8]

Several precautionary measures are being taken to prevent the introduction of spurious noise into the measuring circuits [9] Each rack of measuring equipment contains a small voltage regulating transformer and a hash filter to eliminate noise from the a c input power line In order to prevent interaction of the scalers and for instance the amplifiers their power supplies are segregated Also no fluorescent lights will be installed in the control building since they are often a source both of radiated noise and of power line noise Power lines for electrical typewriters desk calculators and other such electrical office equipment are kept separate and shielded from the power line for the instruments During a period of experimental data taking the operation of all power will be kept to an absolute minimum in order to avoid the attendant introduction of spurious counts

AUTOMATIC ISODOSE PLOTTER

A final part of the instrumentation is the automatic isodose plotter A block diagram of the proposed system is shown in Fig 7

The principle of operation for the isodose plotter is basically as follows The radiation intensity

[7] Weather instrumentation is described in detail on page 10

[8] Video indication is described on page 12

[9] C G Goss and F M Glass *Nucleonics* 8 No 2 66 (1951)

I determined with the measuring equipment de scribed above is compared with a preselected dosage level I_0 If the measured radiation level differs from the selected value the coordinate drive motors M_x and M_y change their respective speeds until the detector position and heading reduce the difference $(I - I_0)$ to zero The vector sum of the two coordinate drive speeds is con stant however so that the detector head is driven at a constant speed but in a controlled direction along the contour of constant dosage level I_0 Simultaneously the Variplotter a two dimension recorder makes a rectangular coordinate plot of the detector head position in the crew compart ment It should be pointed out that the detector heading turns through an angle γ_1 at a rate propor tional to $(I - I_0)$ Proper damping is achieved by adding the derivative term γ_1 without which the system may be unstable Through proper adjust ment of the derivative term the system can be given a degree of overshoot which ensures no cumulative error The amplifiers are all high gain devices whose response characteristics are largely determined by the feedback networks indi cated in Fig 7 as B_1 and B_2 or tachometers T_1 and T_2 Each such component amplifier and feed back network is essentially a null balance device The remainder of the block diagram is self explanatory

There are some additional features of the system for example provision is made to plot isodoses in any two of the three rectangular coordinate dimen sions By connecting the Z axis in place of the X or Y axis an XZ or YZ plot can be drawn The coordinate which is not used in plotting a contour may of course be preset to any desired value with in its adjustable range Furthermore the speed of the detector head is controllable The accuracy of the plotted contours depends upon among other things the speed at which the detector head is driven Inclusion of a speed control permits con trol of the plotting accuracy The Brown recorder included in the loop makes a record of error as a function of time this record is useful in determining the accuracy of any portion of the isodose contour and in correcting plotting errors Also the second slide wire on the recorder provides a convenient means for changing the control intelligence from a d c to an a c signal voltage thus permitting the use of a c motors and synchro indicators and avoiding the difficulties of d c amplifiers The detector can be made to scan in a constant direction by merely opening the loop at the Brown recorder and setting a fixed angle γ at the resolver The detector then scans along the chosen angle in the selected plane at the desired speed Reference points are included in the design and manual setting of the detector at these points both cali brates and accurately orients the Variplotter chart

Performance information on the automatic isodose plotter can be precisely given only after completion of the device The maximum speed of the detector head is tentatively 0 1 in /sec Instantaneous plotting error depends upon this speed and upon the radius of curvature of the particular isodose path Preliminary studies indicate that a constant radius of curvature of as little as a few millimeters can be plotted at maximum speed with small instan taneous error The statistical nature of the input information I has been considered and should cause negligible error when a logarithmic count rate meter is included in the loop Nevertheless any system that contains as many fundamentally nonlinear elements as this one cannot be precisely specified until actual full scale tests have been completed

WEATHER INSTRUMENTATION

Weather instruments are installed on the TSF in order to provide wind and temperature data These data are indicated and recorded on two strip chart recorders on the panel board in the control room in such a manner that the reactor operator has the information at hand at all times along with a permanent record The data will include the wind direction and velocity at the 328 ft level the air temperature (dry bulb) at the ground level and the differential temperature (dry bulb) between the ground level and the 315 ft level Provision has been made on the recording equipment for instal lation of wet and dry bulb differential at a future date if so desired

A complete commercial analyzer supplied by The Instruments Corporation is used for wind analysis This system consists of a d c generator type anemometer a selsyn anemoscope and the as sociated type M panel mounted anemograph re corder The recorder provides a record of both velocity and direction on a single chart having double rulings A velocity range of either 0 to 75 or 0 to 150 mph is selected by means of a manual switch at the recorder For direction a

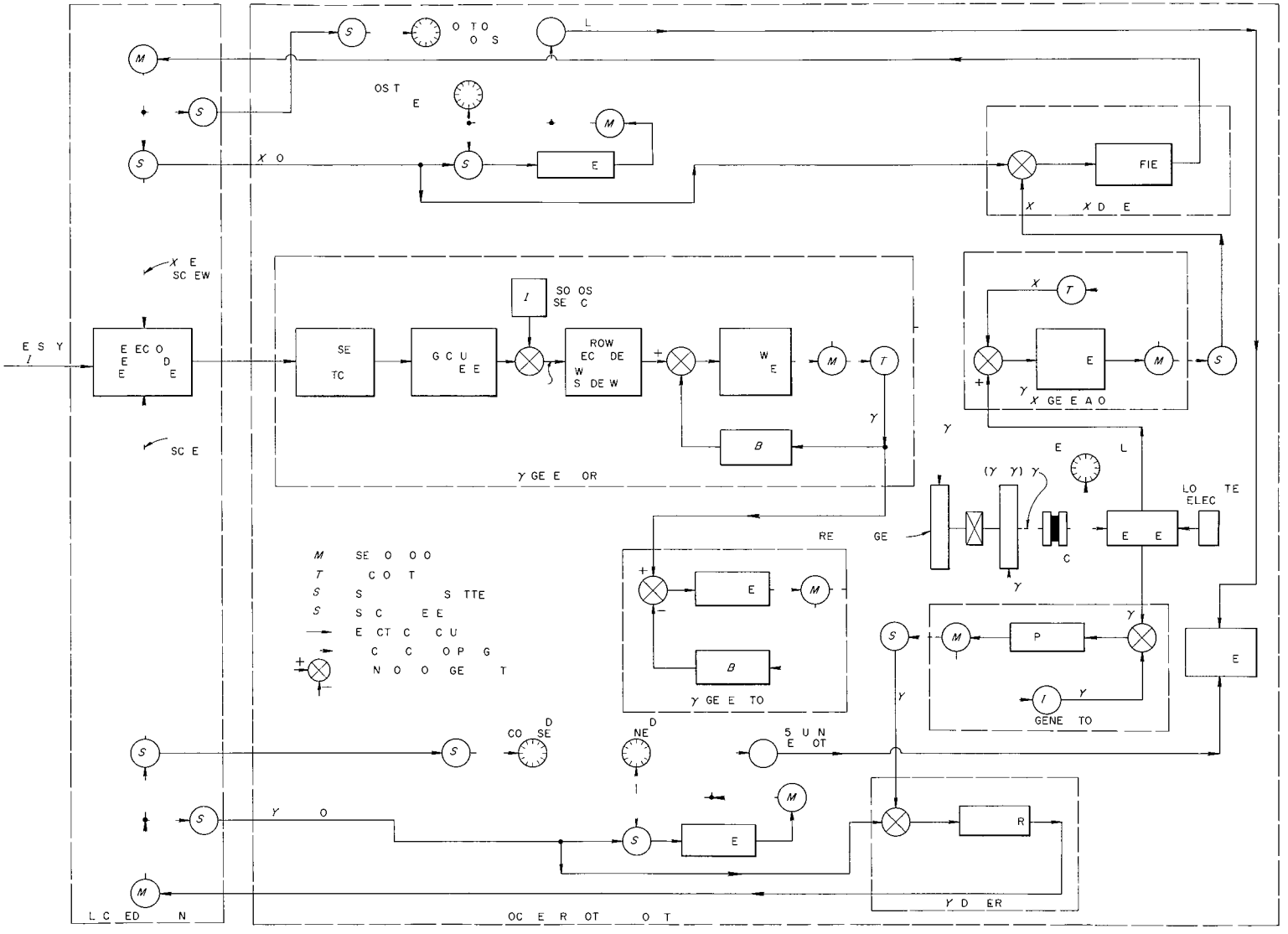

Fig 7 Block Diagram of Automatic Isodose Plotter

two pen system is used with a 0 to 360 deg scale by the manufacturer The transmitters are mounted on a crossarm mast atop the north main truss a distance of approximately 30 ft from tower leg 4 (NE tower) This mounting provides the highest mounting feasible while still allowing reasonable access to equipment and providing lightning protection by the overhead ground cables Also a special three point recorder is used for temperature recording This recorder has a dual range to cover dry bulb temperature and differential temperature on a common scale of –25 to +125°F Copper constantan thermocouples mounted in gold plated solar radiation shields equipped with blowers for aspiration are used for temperature sensing The sensing unit at the top of the tower is mounted on the north side of tower leg 4 (NE tower) at the 315 ft level The unit at the bottom is mounted near the same tower leg at a height of 5 ft from the ground

As the weather data from this installation will also be used by the U S Weather Bureau Office Oak Ridge a coordinated effort was made to have the installation satisfy their specifications as well as those of the TSF

VISUAL INDICATION OF TSF FUNCTIONS

K H Kline

In the TSF there was need for a remote viewing device to permit observation of the operation of the minimum shielded reactor in its suspended tank Further there was need for observation of the functions of the highly specialized equipment used to monitor the radiation by remote control from the underground control house

Television was selected as the most likely means of obtaining visual indication of the processes With this method several positions in and about the reactor can be viewed simultaneously by placing a number of the portable T V Eye cameras at strategic positions on the tower and near the reactor The coaxial cables from the cameras are strung along with the other cables feeding the control mechanisms of the reactor equipment to the underground control house where the viewing receivers are located Television receivers with 17 in picture tubes were selected to serve as the receiver units

It is believed that this system will be invaluable in the TSF study and can be easily adapted to almost any phase of research where remote observation of a process or reaction is needed

INSTRUMENTATION FOR FLUORIDE DYNAMIC CORROSION LOOPS

S A Hluchan

A reactor loop constructed of the metal being studied for corrosion effects will be inserted into a reactor core hole for operation with a circulating mixture of molten fluoride salts at a controlled high temperature The core hole used for this purpose will be HB 2 in the LITR

After a predetermined interval of successful operation the loop system will be stopped removed to a hot cell and dissected for inspection Samples of the fluoride salts the Inconel tubing and special metallic specimens will be analyzed for radiation damage corrosion effects and other changes

The main components of such a fluid circuit are the in pile loop a heat exchanger a venturi flow device and the circulating pump The entire system will be located inside the reactor except for the pump which will rest on a stand located in front of hole HB 2

The entire fluid circuit and its components will be traced by heaters and covered with insulation Numerous thermocouples will be necessary to determine system conditions

The basic measurements and controls required for the operation of this system are summarized on the instrument flow plan Fig 10

The most critical measurement and control problem during the life of this experiment will be that of temperature It will be necessary to maintain the temperature of the entire loop between the limits of about 1150 to 1550°F the lower limit guards against the solidification of the fluid and the upper limit guards against physical failure of the loop piping and components Close temperature control will be maintained at the in pile end of the loop and less critical control will be maintained at somewhat lower temperatures in the other parts of the system

The electric temperature controller for the loop end is of the duration adjusting type with pro portional and reset actions It will be provided with a special expanded scale which will increase the measuring sensitivity in the operating range Temperatures of the various other components of the system are controlled by manually adjusting the variacs which regulate the heaters

It is important that the temperature indicators and thermocouples installed in the fluid circuit be selected for rapid response not only to permit rapid correction but also to provide sufficient alarm setback or scram signals in case of acci dental high temperature Speed of response in thermocouples is improved by the use of small gage wires immersion wells and welded contact between the thermocouple junction and the surface

In progressing toward the required experimental conditions for the loop three modes of control and operation will have been experienced first will be the heating of the system and the consequent melting of the contained fluoride salt mixture next will be the starting of the circulating pump and auxiliaries and the establishment of tempera ture equilibrium and finally will be the fluid circulation in the presence of a neutron flux During the first two stages heat will be supplied to the system by means of electric heaters How ever during the last stage heat will be continu ously removed from the system by the air to fluid heat exchanger Once the fluid mixture is molten and circulating it must be kept in this condition until the conclusion of the experiment

All factors which influence system temperature are regulated by controlling devices Some of these factors are fluid flow rate air flow to the heat exchanger cooling water flow to the hole jacket and off gas vent pressure

Safeguards for operating personnel and for the reactor itself in the event of system leaks high temperatures low air or water flow and high radio activity readings at vent lines are provided by means of adjustable alarm contacts in the recorders or indicators The annunciator equipment will either alert the operator or shut down the reactor Special devices and local alarms (Q 1483 8 Q 1483 16 Q 1483 17) are employed to assist the operator to protect the equipment and to prevent the oc currence of false scram signals during the difficult transitional periods occasioned by planned reactor shutdowns and startups and by emergency shut downs

In case of a severe reduction in pressure or failure of the air supply to the heat exchanger standby cylinders of nitrogen are automatically valved into service

The panel layout (see Figs 11 and 12) is function

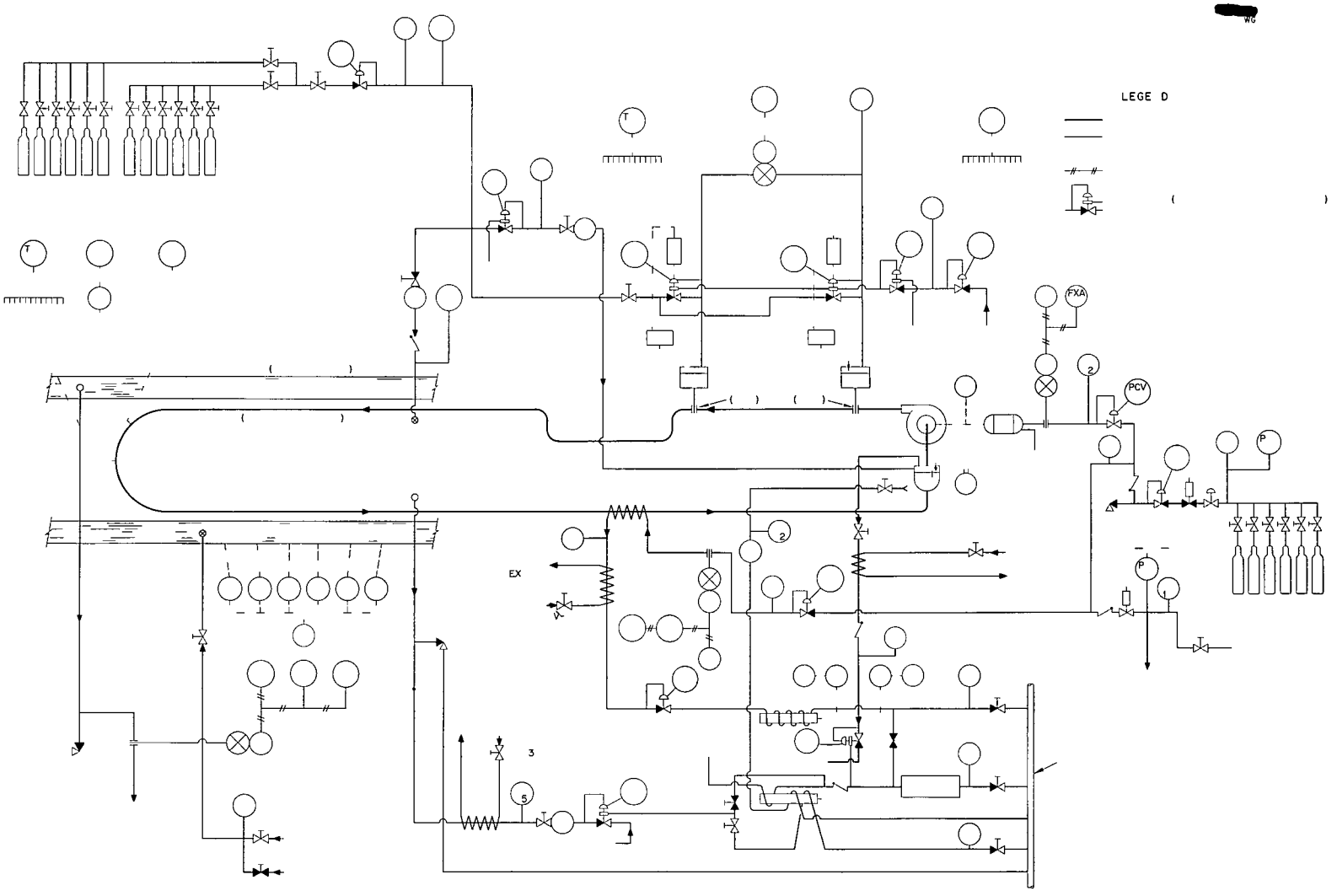

Fig 10 Dynamic Corrosion Loop Instrumentation

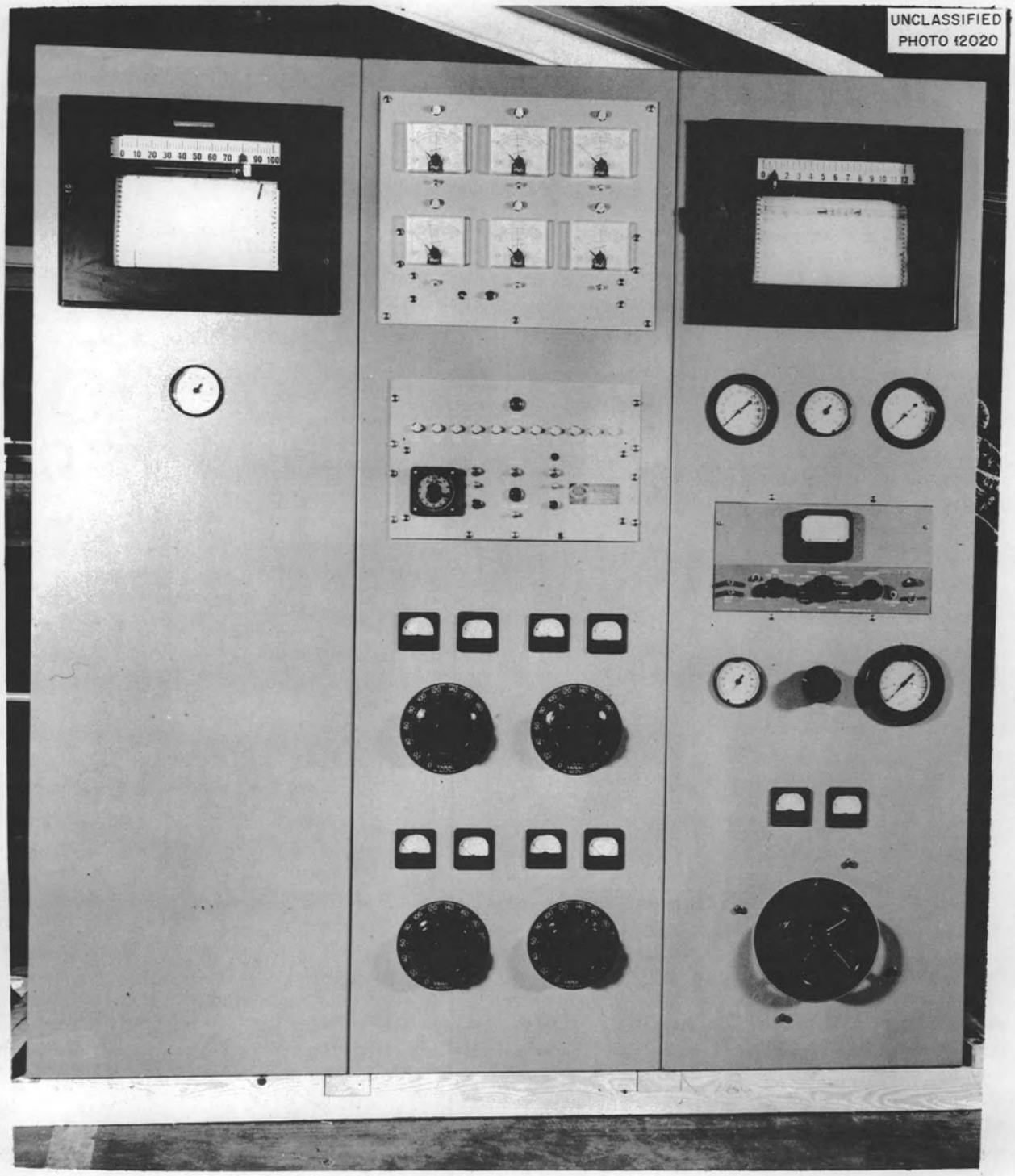

Fig. 11. Fluoride Dynamic-Corrosion Loop Panels 1, 2, and 3.

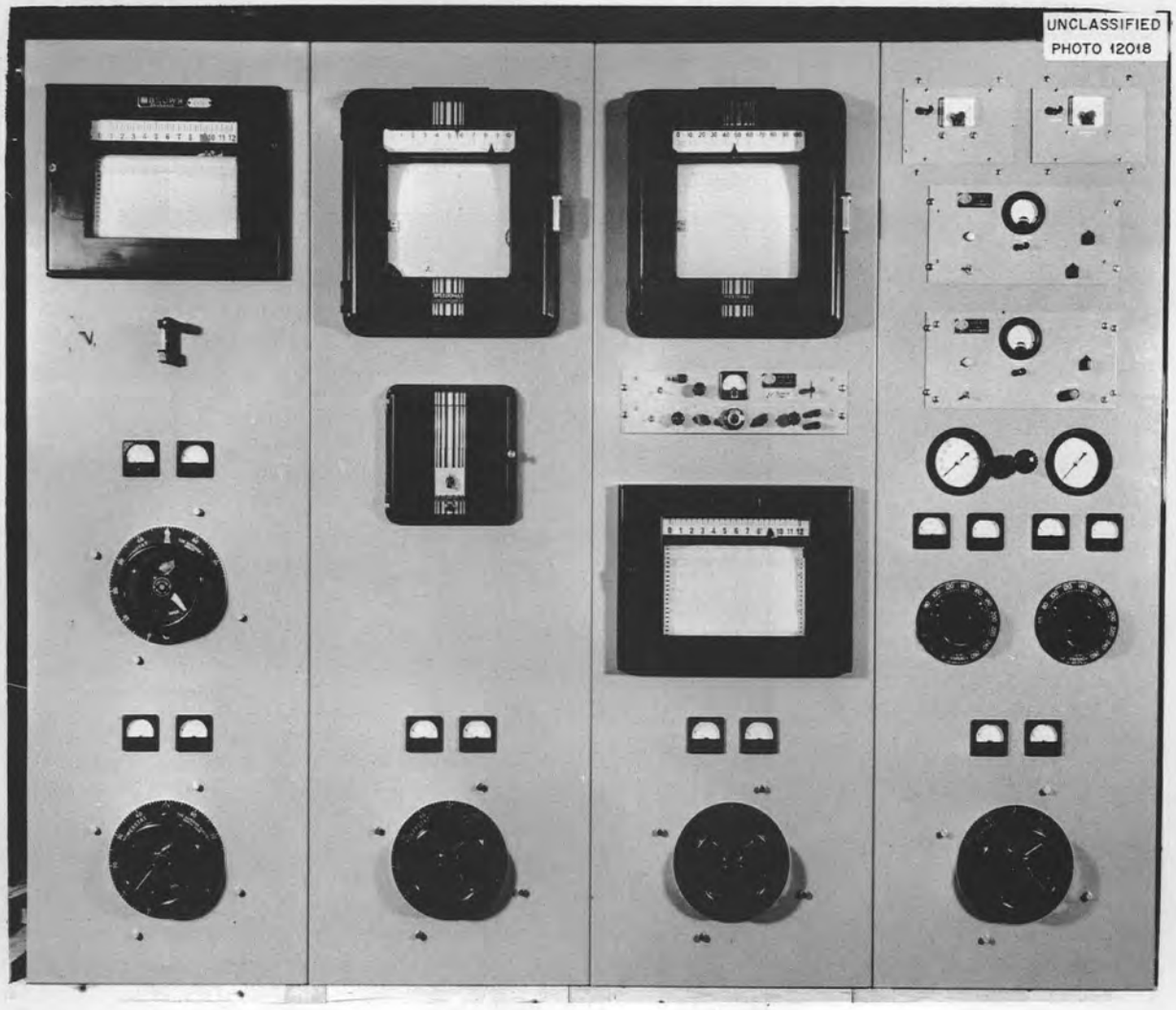

Fig. 12. Fluoride Dynamic-Corrosion Loop Panels 4, 5, 6, and 7.

al in that all controls, meters, regulators, or instruments pertaining to a particular part of the fluid system are together on one panel or on adjacent panels. The panel array consists of seven 24-in. units, any one of which can be removed as an integral part, including its mounting frame and attached electrical power devices and controls. All instruments are located on the upper parts of the panels, and the instrument power cables will plug into receptacle boxes in a feeder conduit line from the building lighting circuit. The load power autotransformers and control devices are all located near the bottom of the panels. Relay boxes and fusible safety switches for each panel will be mounted directly on the back of the frame. Twist-lock receptacles mounted at this point will energize the various heater cables controlled from any particular panel.

The completed panel board has been installed and tested in Building 3550, where it will be used for the high-temperature test runs of loop and equipment. Later it will be moved to the LITR for the in-pile run.

Installation of instruments and control accessories external to the panel is in progress at the LITR. This includes the orifice runs, transmitters, valves, regulators, controllers, heat exchangers, and ionization chambers. Other preparatory work includes the installation of additional electrical power service, large helium and nitrogen gas dispensers, and provisions for air, water, drain, and off-gas connections and controls.

HRE CORROSION EXPERIMENT INSTRUMENTATION – LITR HOLE HB-6

S. A. Hluchan
J. T. DeLorenzo
P. W. Hill

Complete cabinet-mounted instrumentation for the simultaneous recording of temperature and pressure, for temperature control, for off-gas instrumentation, and for alarm and safety circuitry in static-corrosion studies of irradiated metals has been installed for hole HB-6 in Building 3005. Details of the design and construction of this system are shown on ORNL drawings Q-1476-1 through Q-1476-9.

Simultaneous recordings of temperature and pressure are made on a two-variable (time vs X_1, X_2) potentiometer recorder. Temperature control is achieved by use of electric proportional control.

Safety devices for signaling attendants or shutting down the reactor can be provided by means of adjustable alarm contact cams in the recorders and indicators and by appropriate pressure switches in the cooling-air supply and vent lines. Abnormal conditions that will actuate these alarms are excessively high or low temperatures, high pressure, reduction in cooling-air pressure, loss of vent vacuum, or a high reading of space radiation from the monitron at hole HB-6. Figure 13 is a photograph of the control panels for this experiment.

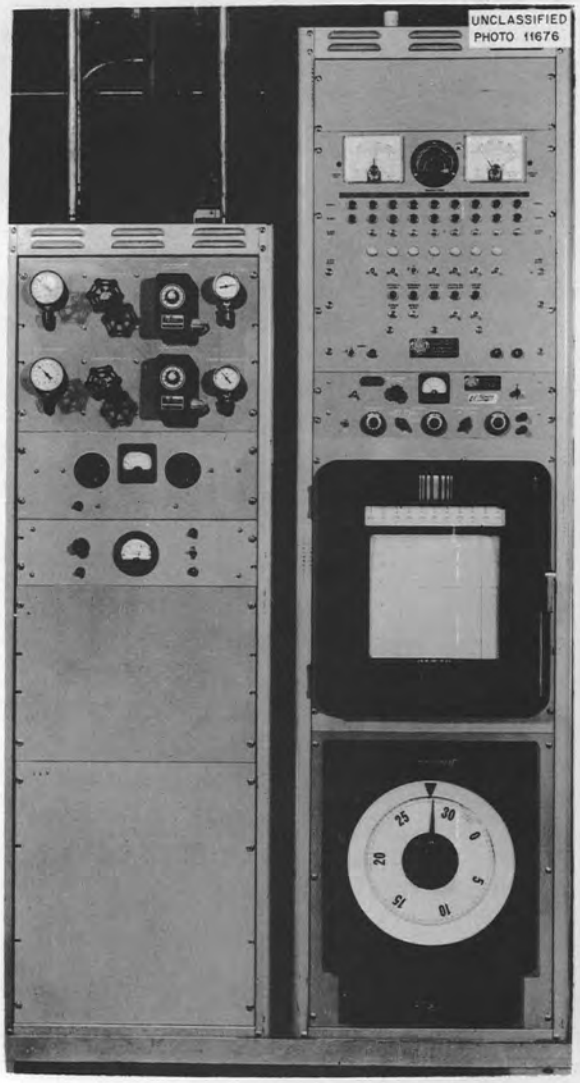

Fig. 13. HRE Corrosion Experiment Instrumentation.

INSTRUMENTATION FOR UNIT OPERATIONS EXTRACTION COLUMNS

T M Gayle

A portion of the Unit Operations experimental engineering program will consist of the construction of two distillation columns two pulse columns a spray column and a packed column These columns will include the usual accessory feed tanks product storage drums etc

The first distillation column is a conventional 15 tray Badger all stainless steel unit with a feed capacity of approximately 60 gph The instrumentation for the column is shown in Fig 14 Each bubble tray will have its temperature monitored by a multipoint recorder and through a switching network any tray temperature may be selected to actuate the temperature recorder controller which controls steam to the reboiler Present plans call for the reboiler to be gravity flooded from the column Also flow control of the tower bottoms will be by liquid level flow control of the condensed coolant will be by column pressure and the flow of the product will be controlled by the product drum level The temperature of the condensed coolant will be measured For this size of column a controlled reflux rate was considered to be more desirable than the variable percentage product to reflux splitting A reflux pump will be used to ensure adequate reflux flow at all times

The second distillation column will be an all glass unit of approximately 15 gph feed capacity Instrumentation for this system will be very similar to that for the stainless steel column Construction of the individual detection and control devices will be in keeping with an all glass system Thermocouple wells for the bubble trays will be of glass tubing with the couple sealed in the end and rotameters for the feed reflux and product streams will be of all glass and Teflon construction The feed pump and reflux pump will be of the Vanton design incorporating packless construction and a plastic displacement element Tests of these pumps over long periods of time have proved their adequacy for this service All control valves will be of the pinch tubing type

Instrumentation for the pulse packed and spray solvent extraction columns will incorporate interface measurement and control together with organic and aqueous flow metering Level measurement in the feed and storage tanks will also be incorporated

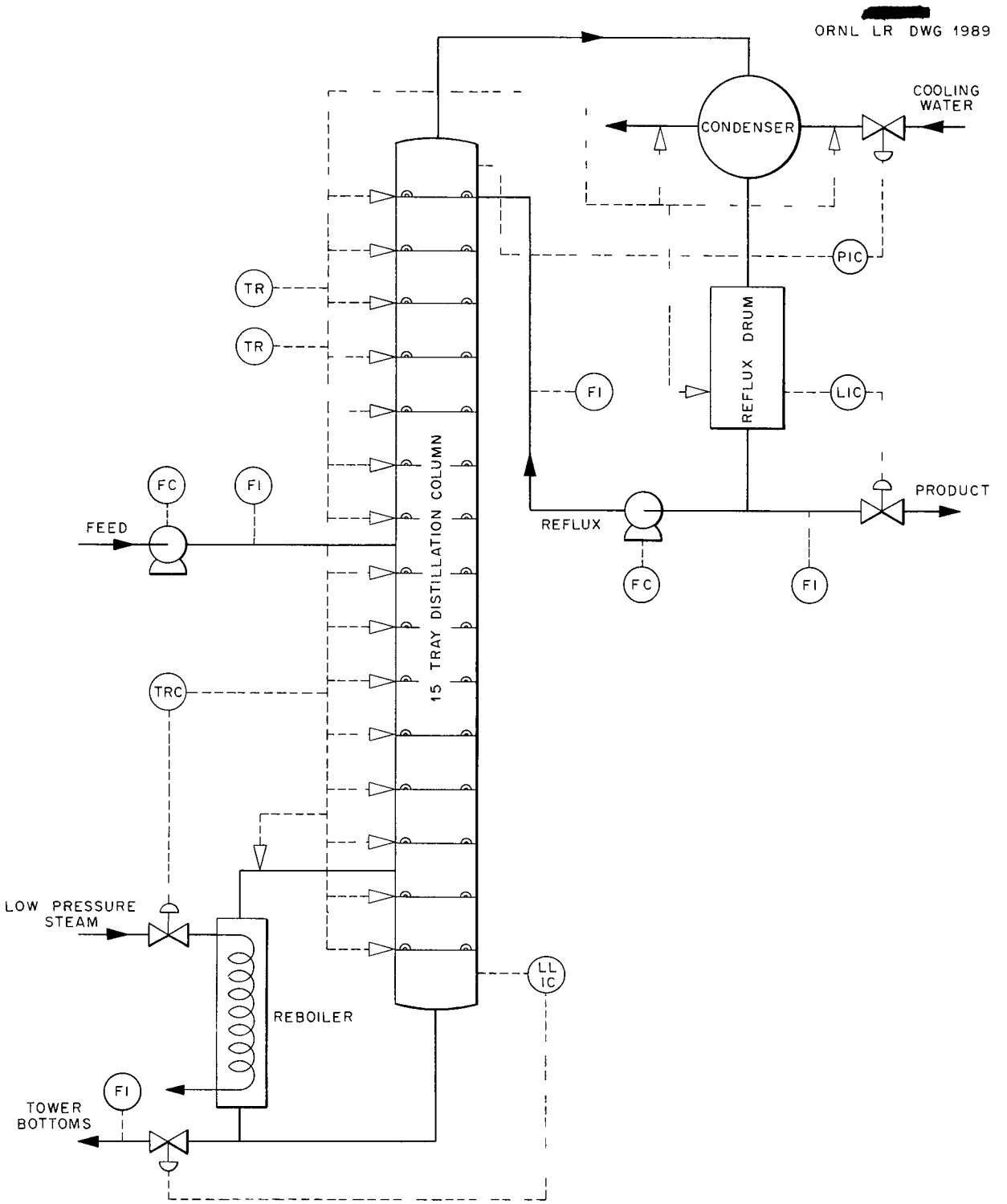

Fig 14 Preliminary Design of Instrumentation for Unit Operations Experimental Distillation Column