JAM-5-20-55

[redacted]

CENTRAL RESEARCH LIBRARY
DOCUMENT COLLECTION

MARTIN MARIETTA ENERGY SYSTEMS LIBRARIES
3 4456 0349684 8

ORNL 1761
Chemistry-Separation Processes
for Plutonium and Uranium Ha

PRELIMINARY COST ESTIMATION: CHEMICAL PROCESSING AND FUEL COSTS FOR A THERMAL BREEDER REACTOR POWER STATION

E. D. Arnold
A. T. Gresky
R. J. Klotzbach
A. R. Irvine

CENTRAL RESEARCH LIBRARY
DOCUMENT COLLECTION
LIBRARY LOAN COPY
DO NOT TRANSFER TO ANOTHER PERSON
If you wish someone else to see this document, send in name with document and the library will arrange a loan.

OAK RIDGE NATIONAL LABORATORY
OPERATED BY
CARBIDE AND CARBON CHEMICALS COMPANY
A DIVISION OF UNION CARBIDE AND CARBON CORPORATION
UCC
POST OFFICE BOX P
OAK RIDGE, TENNESSEE

[redacted]

[redacted]

[redacted]

[redacted]

ORNL-1761

This document consists of 64 pages
Copy 4 of 166 copies Series A

CHEMICAL TECHNOLOGY DIVISION

PRELIMINARY COST ESTIMATION

CHEMICAL PROCESSING AND FUEL COSTS

FOR A THERMAL BREEDER REACTOR POWER STATION

E D Arnold, A T Gresky, R J Klotzbach
A R Irvine

Date Issued JAN 27 1955

Contract No W-7405-eng-26

DECLASSIFIED

CLASSIFICATION CHANGED TO
BY AUTHORITY OF TID-1149
BY R. Manson 8/8/57

OAK RIDGE NATIONAL LABORATORY
Operated by
CARBIDE AND CARBON CHEMICAL COMPANY
A Division of Union Carbide and Carbon Corporation
Post Office Box P
Oak Ridge, Tennessee

[redacted]

[redacted]

3 4456 0349684 8

INTERNAL DISTRIBUTION

1 C E Center
2 Biology Library
3 Health Physics and Metallurgy Library
4-5 Central Research Library
6 Reactor Experimental Engineering Library
7-11 Laboratory Records Department
12 Laboratory Records, ORNL R C
13 C E Larson
14 L B Emlet (K-25)
15 J P Murray (Y-12)
16 A M Weinberg
17 E H Taylor
18 E D Shipley
19-20 F L Culler
21 F C Vondy Lage
22 W H Jordan
23 J A Swartout
24 C P Keim
25 J H Frye, Jr.
26 S C Lind
27 A H Snell
28 A Hollaender
29 M T Kelley
30 K Z Morgan
31 T A Lincoln
32 R S Livingston
33 A S Householder
34 C S Harrill
35 C E Winters
36 D W Cardwell
37 E M King
38 W K Eister
39 F R Bruce
40 D E Ferguson
41 H K Jackson
42 H E Goeller
43 D D Cowen
44 R A Charpie
45 J A Lane
46 M J Skinner
47 R E Blanco
48 B F Bottenfield
49 A C Jealous
50 E M Shank
51 W G Stockdale
52 W E Unger
53 R P Wischow
54 R E Leuze
55 E O Nurmi
56 R A McNees
57 J P McBride
58 W L Carter
59 A M Rom
60 E J Frederick
61 E D Arnold
62 A T Gresky
63 A R Irvine
64 R J Klotzbach
65 E G Bohlmann
66 R W Stoughton
67 S E Beall
68 R B Korsmeyer
69 C B Graham
70 M C Edlund
71 H C Claiborne
72 M Tobias
73 R N Lyon
74 R B Briggs
75 H F Poppendiek
76-77 ORNL Document Reference Library, Y-12 Branch

EXTERNAL DISTRIBUTION

78 American Machine and Foundry Company
79-86 Argonne National Laboratory
87 Armed Forces Special Weapons Project (Sandia)
88 Armed Forces Special Weapons Project, Washington
89-91 Atomic Energy Commission, Washington
92 Babcock and Wilcox Company

93 Bettis Plant (WAPD)
94-96 Brookhaven National Laboratory
Bureau of Ships
Carbide and Carbon Chemicals Company (C-31 Plant)
99-101 Carbide and Carbon Chemicals Company (K-25 Plant)
102 Chicago Patent Group
103 Commonwealth Edison Company
104 Detroit Edison Company
105 Dow Chemical Company (Rocky Flats)
106-109 duPont Company, Augusta
110 duPont Company, Wilmington
111 Duquesne Light Company
112 Foster Wheeler Corporation
113 General Electric Company (APS)
114-121 General Electric Company, Richland
122 Goodyear Atomic Corporation
123 Hanford Operations Office
124 Iowa State College
125 Kaiser Engineers
126-128 Knolls Atomic Power Laboratory
129-130 Los Alamos Scientific Laboratory
131 Massachusetts Institute of Technology (Benedict)
132 Monsanto Chemical Company
133 Mound Laboratory
134 Naval Research Laboratory
135 Newport News Shipbuilding and Dry Dock Company
136-137 North American Aviation, Inc
138 Pacific Northwest Power Group
139 Patent Branch, Washington
140 Pennsylvania Power and Light Company
141-144 Phillips Petroleum Company (NRTS)
145-146 University of California Radiation Laboratory, Berkeley
147-148 University of California Radiation Laboratory, Livermore
149 Vitro Engineering Division
150 Westinghouse Electric Corporation (IAPG)
151-165 Technical Information Service, Oak Ridge
166 Division of Research and Medicine, AEC, ORO

CONTENTS

		Page
0 0	Abstract	1
1 0	Summary and Conclusion	1
2 0	Introduction	6
3 0	Discussion of Process	11
	3 1 Core Solution Processing, Basis	11
	3 2 Blanket Processing, Basis	21
	3 3 D_2O Recovery	22
	3 4 Thorex Processing	25
4 0	Cost Estimate of Processing Facilities	32
	4 1 Cost of Hydraulic Cyclone Processing	37
	4 2 Cost of Thorex Plant Processing	39
5 0	References	49

APPENDIXES

I	Analytical Requirements and Methods	50
II	Fission Product Poisons	52
III	Equations Used in Calculating Inventories and Losses of Fissile and Fertile Materials	57

TABLES

1	Fuel Costs for Two-Region Breeder Reactor Operated at 250°C with Thorium Oxide Slurry Blankets Containing 1000 g of Thorium per Liter	5
2	Characteristics of Proposed Two-Region Thermal Breeder Reactor	9
3	Neutron Balances for Two-Region Thermal Breeder Reactor	10
4	Analysis of K-23 Core Processing, One Reactor	18
5	Analysis of K-23 Blanket Processing, One Reactor	23
6	Analysis of K-23 Core and Blanket Processing, One Reactor	24
7	Annual Operating Costs for Thorex Chemical Plant	39

[redacted]

TABLES (Continued)

		Page
8	Raw Materials for Thorex Process	40
9	Manufacturing Facilities Summary	41
10	Manufacturing Facilities	42
11	Estimated Analytical Requirements for K-23	50
12	Analytical Methods and Equipment Required for K-23 Reactor Power Station Chemical Plant	51
13	Equations Used in Calculating Inventories and Losses of Fissile and Fertile Materials	57

FIGURES

1	Cost Distribution of 1350-Mw Reactor Power Station	4
2	Proposed Chemical Processing Scheme for K-23 Reactor	12
3	Continuous Centrifugation Scheme	14
4	Effect of Cooling Time on Activity of Insoluble Fission Products Produced During One Day's Irradiation at 3.2×10^{14} Flux	19
5	D_2O Recovery System for Thermal Breeder Reactor Power Station	26
6	Schematic Equipment Flowsheet for Thermal Breeder Reactor Power Station, Thorex Process, Sheet 1	29
7	Schematic Equipment Flowsheet for Thermal Breeder Reactor Power Station, Thorex Process, Sheet 2	30
8	Schematic Flowsheet for Thermal Breeder Reactor Power Station Thorex Process, Makeup Area	31
9	Tentative Chemical Process Building for Thermal Breeder Reactor Power Station	33
10	Two-Region Reactor Station with Proposed Chemical Plant	35
11	Fission Product Poisons in Core of Two-Region Thermal Breeder	54
12	Total Poison Effects in Core of Two-Region Thermal Breeder	55
13	Poison Effects as a Function of Chemical Group in Core of Two-Region Thermal Breeder	56

ACKNOWLEDGMENTS

The authors gratefully acknowledge the valuable assistance given by E J Frederick in the estimation and design of the analytical facilities associated with the chemical plant

[redacted]

0 0 ABSTRACT

Results of a cost estimate for the chemical process associated with a three-reactor power station of a proposed homogeneous breeder system, the K-23 reactor, indicate that the chemical processing cost will be 1 06 mills per kilowatt-hour of electricity This cost is based on current Thorex technology for a limited size plant and is not representative of the optimum plant size which would be integrated in a larger power station The unit fuel costs which include reactor inventories, fuel consumption and losses in addition to the chemical processing cost is estimated at 2 19 mills per kilowatt-hour of electricity, or $12 26 per megawatt-day of heat

1 0 SUMMARY AND CONCLUSIONS

The blanket of the K-23 reactor will be processed for isolation, recovery, and recycle of uranium and thorium in a Thorex process plant at the rate of 67 kg/day or with a processing period of 320 days This processing period corresponds to a fission product poison level in the blanket of 3% and a Mass-233* concentration of 6000 g per ton of thorium

The K-23 reactor-core uranium solution will be processed for removal of high-cross-section fission products by two different methods The bulk of the insoluble fission product sulfates will be removed on a daily cycle by means of hydraulic separators The insolubles, which constitute 80% of the total fission product poisons, will be carried in 120 liters per day of cyclone underflow, which is blended with the blanket material as Thorex feed to give a core processing period of 190 days The poison level for these processing conditions will be less than 5 6%

The estimated chemical processing costs for a three-reactor power station with associated hydraulic cyclone facilities and a 0 2-ton/day Thorex chemical plant is 1 06 mills per kilowatt-hour of electricity

* The term "Mass-233" as used in this report refers to U^{233} + Pa^{233}

[redacted]

The total fixed investment cost for the 200-kg/day Thorex plant is $5,798,300 which at 15% amortization represents 30 7% of the processing cost The annual operating cost is $1,290,100 and represents 45 6% of the processing cost The hydraulic cyclone installation cost is 2 84% and inventories represent 8 83% of the total processing cost Losses amount to 12% of the process cost, with heavy water losses making the largest contribution

The addition of reactor inventories, fuel consumption, and losses to the chemical processing cost results in a total net fuel cost for the reactor station of $17,065 per day after crediting a breeding gain of 14 4% This amounts to an estimated unit fuel cost of 2 19 mills per kilowatt-hour of electricity or $12 26 per megawatt-day of heat The estimate is based on fixed charges established in 1953 by the AEC Reactor Development Division and would be significantly lowered if the latest recommended figures available to power study groups were used

The breakdown of fuel and chemical processing costs is shown in Fig 1 Tabulation of fuel costs for the power station is given in Table 1

If the hydraulic cyclone solids removal process is not feasible, the same core poison level can be maintained by processing the core on a 54-day cycle with an increase in the variable costs of ~$1,000 per day This increase represents 0 13 mills/kwh making the total fuel cost 2 32 mills/kwh

Blanket material is cooled for 55 days and the core cyclone underflow is cooled for 110 days before they are blended and processed in the Thorex plant The cooling periods are determined by the activity level which can be tolerated for solvent stability For this estimate the tolerable specific exposure was assumed at 0 5 beta watt-hr per liter of extractant Cooling the blanket for 55 days only allows 4 7% of the Mass-233 to be partitioned as Pa^{233}, which decays to isotopically pure U^{233} and is recovered in a separate extraction cycle The remainder of the blanket Mass-233, as U^{233}, is partitioned and recovered with the

core uranium Core uranium at steady-state conditions is approximately 36% U^{233} diluted with the higher isotopes U^{234}, U^{235}, and U^{236} In this estimate, no premium value was assigned to isotopically pure U^{233} but even in a power economy it must be assumed that the power reactor by-product, represented by breeding gain, would have an enhanced value if it could be recovered mass-pure To recover the U^{233} breeding gain mass-pure, it is necessary to process the blanket after approximately 5 days' cooling Development work is necessary to determine the solvent stability at a specific exposure of 1 0 beta watt-hr/liter, equivalent to that expected after 5 days' blanket cooling

The estimate of the physical facilities necessary for the Thorex processing plant is considered a realistic evaluation for the proposed three-reactor station, based on current Thorex technology An optimum size plant integrated with a larger power station or a group of stations would significantly lower the unit cost For example, an increase in chemical plant capacity by a factor of 3 would result in only a 37% increase in capital investment and a 15% increase in total operating costs, or a unit chemical processing cost of 0 62 mill per kilowatt-hour

[redacted]

ORNL-LR-DWG 4178

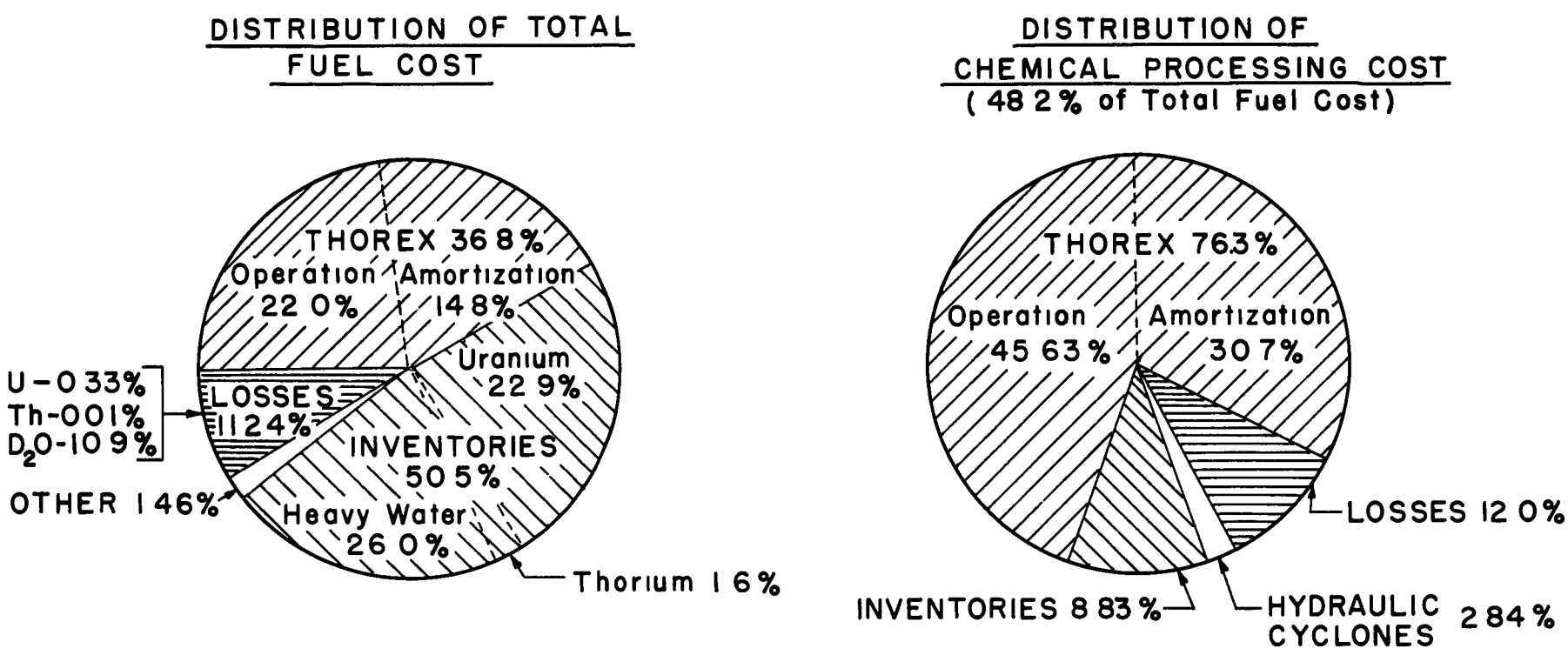

TOTAL COST 2 19 mills/kwh

INVENTORY CHARGE 12%
FIXED CHARGE ON INVESTMENT 15%
HEAVY WATER LOSSES 5% (assumed)

TOTAL COST - 1 06 mills/kwh

THOREX PLANT

PLANT SIZE 200 kg/day-Thorium
FIXED INVESTMENT $ 5,798,300
ANNUAL OPERATING COST $ 1,290,000

FIG 1

COST DISTRIBUTION OF 1350-MW REACTOR POWER STATION

BASIS THREE TWO-REGION 450 Mw REACTORS

Table 1

Fuel Costs for Two-Region Breeder Reactor Operated at 250°C with Thorium Oxide Slurry Blankets Containing 1000 g of Thorium per liter, Core Power at 320 Mw

	Three-Reactor Station
Concentration of U^{233} in core, g/liter	1 24
Fission product poison level in core, $\frac{\text{neutrons absorbed in poison}}{U^{233}\text{ atoms consumed in core}}$	0 056
Breeding gain, $\frac{U^{233}\text{ atoms produced}}{U^{233}\text{ atoms consumed in core}} - 1$	0 144
Total power, Mw of heat	1,392
Net Mw of electricity	324
Total U^{233} + Pa^{233} requirement, kg	463 5
Total thorium requirement, metric tons	63
Total D_2O requirement, metric tons	145 5
Cost, $/day	
Thorium consumption	19
Clone processing	276
Thorex processing of core + blanket and D_2O recovery	
Operation	4,428
Amortization	2,979
Uranium and thorium losses	67
Uranium inventory	4,610
Thorium inventory	324
D_2O inventory and losses	7,440
Value of excess U^{233} produced	3,078
Total cost per day	17,065
Net cost $/Mwd of heat	12 26
Net cost, mills/kwh of electricity	2 19

2 0 INTRODUCTION

The purpose of this study was to establish preliminary bases and estimates for chemical processing costs associated with power producers of the homogeneous thermal breeder class The specific case studied was a power station of three two-region K-23 reactors which utilize $U^{233}O_2SO_4$ solution in the cores and $Th^{232}O_2$ slurry in the blankets The chemical plant was assumed to be closely integrated with the power plant facilities

Advantages of such a study at this particular stage of the K-23 development are that the more critical areas affecting costs may be revealed and priority areas for chemical development can be emphasized It should be realized that this study utilizes educated assumptions for certain chemical processing steps, however, flow diagrams and cost breakdowns of the several process units are included to reveal present concepts of processing requirements

Reactor conditions and proposed chemical processing periods are indicated in Tables 2 and 3

The blanket of the K-23 reactor will be processed in a Thorex plant at a rate of 67 kg/day or at a period of 320 days This processing period corresponds to a fission product poison level in the blanket of 3% and a $U^{233} + Pa^{233}$ concentration of 6000 g per ton of thorium

The K-23 reactor core will be processed for removal of high cross-section fission products by two different methods The bulk of the insoluble fission product sulfates, approximately 80% of the fission product poison, will be removed on a daily cycle by means of liquid cyclones The remainder of the fission products and corrosion products will be removed on a much longer cycle in the Thorex plant

The following assumptions were made for the design of the chemical process flowsheet and facilities

(1) Core and blanket solutions are blended in Thorex feed preparation Cooling periods for the blanket and core are determined primarily by the activity level that can be tolerated for solvent stability The limiting

range of specific exposure considered tolerable is 0 2 to 2 0 beta watt-hr per liter of extractant In the absence of specific data for this estimate, 0 5 beta watt-hr per liter of extractant was arbitrarily chosen as the limiting specific exposure

The exposure was calculated assuming a solvent residence time of 10 min in the A column

(2) Heavy water removal and recovery from the blanket stream is performed immediately after discharge from the reactor and the ThO_2 is reslurried in light water to a concentration of 1000 g/liter and stored for cooling The core solution is evaporated to 1 M UO_2SO_4 in heavy water, stored for cooling, and subsequently dried for complete heavy water recovery and redissolved in light water

(3) Decontaminated thorium can be remotely reprepared as ThO_2 slurry at an activity level of 10^{12} d/m/kg Th (If it is necessary to cool to 10^9 d/m/kg, which is the specification for thorium metallurgical handling, additional fission product decontamination and cooling periods up to 300 days with additional thorium inventory charges of approximately $60 per reactor day will be required)

(4) Protactinium-233 will be stored and cooled in the acid-deficient 2 M aluminum nitrate aqueous raffinate from the Thorex A column Three stainless steel tanks are required two for filling, evaporation, and cooling, and one for feeding to a U^{233} separate-cycle extraction system After decay, this material can be separately isolated as an isotopically pure U^{233} product, if desirable for research or weapons applications

In determining the fuel costs, the tentative basis for establishing the fixed charges for a nuclear power plant recommended by the Evaluation Staff of the AEC Division of Reactor Development[6] was used Table 13 in Appendix III presents equations used in calculating inventories and losses of fissile and fertile materials The cost analysis was based on the following assumptions

(1) The value of the major reactor fuel components were chosen as $20,000 per kilogram for Pa^{233} and/or U^{233}, $11 per kilogram for thorium, and $88 per kilogram for D_2O

(2) Fixed charges on the depreciating capital investment are 15% per year, which includes depreciation, interest on investment, insurance, and all taxes

(3) Fixed charges on nondepreciating capital items such as fissile, fertile, and special materials inventories are 12%

(4) Heavy water is considered as a nondepreciating investment with a 12% fixed charge An additional 5% was added as an assumed annual loss of inventory

(5) The chemical plant is located adjacent to the reactor building with a sharing of common facilities such as administration, maintenance, off-gas stack, some waste facilities, security, fire protection, and miscellaneous overhead items Operating and laboratory personnel and facilities were considered as entirely separate

(6) Power for operating the chemical plant will be purchased from the reactor station

(7) Hydraulic cyclone equipment and facility and operating costs are considered separately from the Thorex plant costs although both systems are integrated

Table 2

Characteristics of Proposed Two-Region Thermal Breeder Reactor

Breeding gain 0 144 (5 6% poisons)

Core

Power	320 Mw
Diameter	6 ft
Volume of core	3,200 liters
Volume of core system	23,000 liters
Average flux in core	$2\ 29 \times 10^{15}$
Average flux in core system	$3\ 2 \times 10^{14}$
Circulation rate	140,000 liters/min
U^{233} concentration	1 24 g/liter
Total U^{233} in system	28 5 kg
Area of stainless steel in system	15,450 ft^2
U^{233} processing rate	150 g/day
Processing period	190 days

Blanket

Power	144 Mw
Volume of blanket	11,600 liters
Volume of blanket system	21,000 liters
Average flux in blanket system	$5\ 1 \times 10^{13}$
Thorium concentration	1,000 g/liter
U^{233} concentration	5 g/liter
Pa^{233} concentration	1 g/liter
Total Mass-233	126 kg
Thorium processing rate	67 kg/day
Mass-233 processing rate	405 g/day
Processing period	320 days

Table 3

Neutron Balances for Two-Region Thermal Breeder Reactor[3]

Temperature 250°C
6-ft-diam core, 320 Mw, no poisons in core
2-ft-thick blanket, 1000 g of thorium per liter, 320-day processing period for blanket, blanket power at 160 Mw

U^{233}/Th ratio in blanket, g U^{233}/kg Th	5
Pa^{233}/Th ratio in blanket, g Pa^{233}/kg Th	1
Breeding gain, $\frac{U^{233} \text{ atoms produced}}{U^{233} \text{ atoms consumed in core}} - 1$	0 20
Neutron balance, $\frac{\text{absorptions}}{\text{absorptions by } U^{233} \text{ in core}}$	
Absorption in the core by	
U^{233}	1 0
U^{234}	0 090
U^{235}	0 090
U^{236}	0 014
S	0 002
D_2O	0 031
Absorption in the core tank	0 055
Absorption in the blanket by	
Th^{232} (resonance)	0 51
Th^{232} (slow)	1 24
Pa^{233}	0 023
U^{233}	0 53
U^{234}	0 005
U^{235}	0 002
Fission products	0 042
D_2O	0 003
Leakage Slow	0 020
Fast	0 051

3 0 DISCUSSION OF PROCESS

Two basic features of the proposed chemical process (see Fig 2) are (1) daily processing of the core solution for continuous removal of insoluble fission and corrosion products, and (2) the longer-range recovery of the thorium and U^{233} from both the blanket and core

Continuous removal of fission and corrosion products is required to minimize the level of insoluble high-cross-section products in the active region of the reactor and would be accomplished by centrifugation, using the DorrClone principle of solids concentration and separation A properly regulated clone underflow, containing high-activity concentrates in a core-solution medium, would then be treated for recovery of the valuable D_2O and subsequently stored to permit decay of the energetic short-lived isotopes

A Thorex processing plant is required to control the level of soluble high-cross-section irradiation and corrosion products in the active region of the reactor and to permit recovery of the U^{233} gained in breeding $ThO_2(D_2O)$ slurry is drawn from the blanket system on an appropriate time cycle, D_2O is recovered, and $ThO_2(H_2O)$ slurry is stored to permit decay of significant short-lived isotopes, including both Pa^{233} and fission products Subsequently, the ThO_2 is dissolved in nitric acid—fluoride solution, combined with UO_2SO_4 solution from the core, and prepared as aqueous feed to the Thorex solvent extraction process The thorium product from the process is re-prepared as a slurry for the reactor blanket, and part of the U^{233} product is re-prepared as a uranyl sulfate solution for the reactor core That part of the U^{233} representing the breeding gain is prepared for appropriate disposal

3 1 Core Solution Processing, Basis

Chemical processing of the core solution of the homogeneous breeder reactor to remove insoluble fission and corrosion products is required to (1) maintain a high level of neutron economy, (2) minimize the biological hazards associated with the operation of a pressurized radioactive system, and (3) reduce the cost of processing in the Thorex plant

[redacted]

ORNL LR DWG 4179

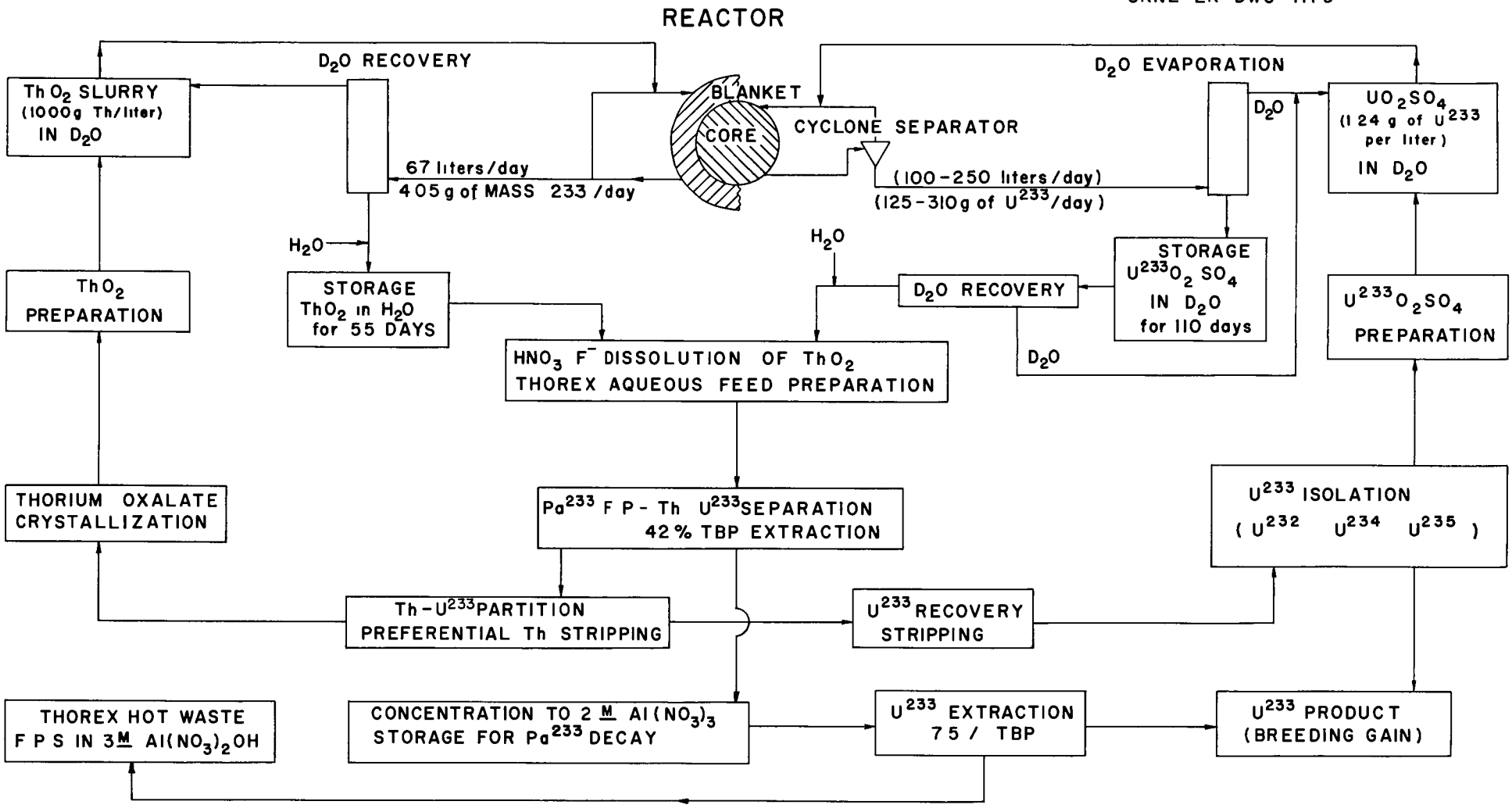

FIG 2 PROPOSED CHEMICAL PROCESSING SCHEME FOR K-23 REACTOR

It has been shown that the major poisoning of the reactor core is contributed by the bulk of the rare earth fission products which constitute 70% of the known certain poisons (see Appendix II) Present data indicate that neutron poisoning due to rare earth fission products in the fuel solutions can be held below 2% by removing the rare earths as insoluble sulfates as they precipitate A review of solid-liquid separation devices has shown liquid-solid cyclones to be the most promising means of separation The cyclones considered[8] basically consist of a number of small cyclone components installed in a common housing with a common feed chamber and common overflow and underflow chambers These multiple units may be installed in one-, two-, or three-stage assemblies Liquid cyclones have been used commercially for the desliming of coal, using a 3-in -diam cyclone to effect a separation of 50-μ particles A 10-mm-diam cyclone is available which is capable of separating ~2-μ particles of clay from water Because the core system is characterized by a low viscosity and a high solid-liquid density difference, there is an excellent probability that a multiple unit utilizing small-diameter cyclones will be effective A schematic flow diagram of a proposed method is shown in Fig 3

The method used to establish poison level and thus the hydraulic cyclone underflow rate was somewhat arbitrary It has been estimated by Briggs[3] that the economic fission product poison level in the core would be ~7% when the calcium fluoride adsorption process[10] for rare-earth removal is used in conjunction with the Thorex process. However, this cost estimate incorporates a centrifugation technique as a replacement for the more expensive fluoride adsorption process Hydraulic cyclone processing is less costly and should maintain a much lower rare-earth poison level It was estimated that the economic fission product poison level should be between 5 and 6% with a hydraulic cyclone—Thorex plant combination A processing period of 190 days (see Appendix II), and thus a processing rate of 120 liters of core solution per reactor per day, was estimated to establish a poison level within these limits and was therefore used for the design and cost estimate

[redacted]

ORNL-LR-DWG 4180

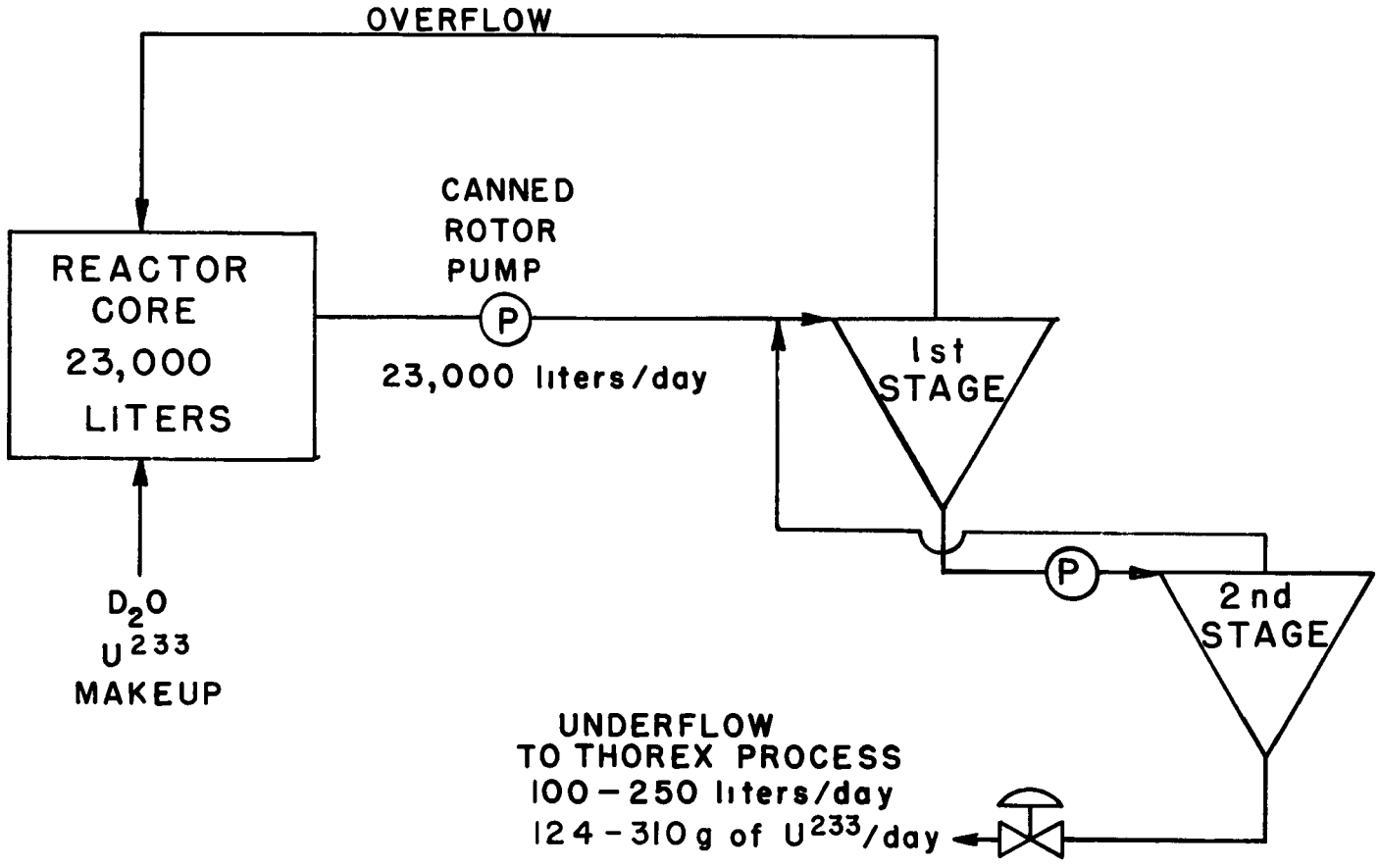

FIG 3 CONTINUOUS CENTRIFUGATION SCHEME FOR K-23 REACTOR CORE SOLUTION

The total poison of 5 6% for a 190-day processing period can be broken down as follows

	% Loss to Poison
High-cross-section fission products	0 77
Cs^{133} - Cs^{135}	1 29
I^{131} (approximate solubility)*	0 1
Poison due to uncertain Tc + Sr with reasonable solubility	1 30
Solubility of rare earths other than Nd	0 2
Solubility of Nd^{143} + Nd^{145}	0 8
Rare gases (10% of maximum)	0 5
Corrosion products at 0 2 mil/year	0 6
Total	5 56

* Approximate I^{131} solubility was estimated from experience with the HRE Noble metals were not included since their solubility characteristics are uncertain Noble metals may add 0 3 to 0 4% if 100% soluble Rare earths will build up to their solubility limit in 30 to 60 days

If hydraulic cyclone processing is not deemed feasible, then a 5 6% poison level can be maintained with a 54-day processing cycle through the Thorex plant Processing by Thorex alone requires a shorter chemical processing period to maintain the same poison level in the core This results in (1) an increase in uranium inventory, (2) an increase in the volume handled per day with attendant increase in D_2O recovery costs, (3) increase in D_2O inventory, and (4) a greater load on the U^{233} isolation laboratory Thorex alone eliminates the capital and operating cost required for the hydraulic cyclone installation, and credit is therefore gained here For this estimate, inspection showed that the credit gained by removing the hydraulic cyclone installation was of the same order of magnitude as the increase in D_2O inventory and drying losses,

assumed to be 0 2%, so neither of these costs were considered The greater load on the isolation laboratory did not contribute to the fuel cost since the resin columns would only have to be loaded and unloaded at more frequent intervals Therefore the variable costs considered were the uranium inventory, D_2O recovery costs, and value of breeding gain lost to core poisons

The comparison of both processing schemes at the same core poison level shows

(1) Hydraulic cyclone processing decreases the total fuel cost by about $1,000 per day

(2) Poison removed by hydraulic cyclones was estimated conservatively and this method may do much better (less than 4% core poisons)

(3) The Thore -alone processing scheme gives no significant reduction of biological hazards The hydraulic cyclones possibly may reduce the long-lived gamma emitting fission products by as much as a factor of 30

(4) If the development program for the solid-liquid separation is unsuccessful, complete processing by Thorex adds only 0 13 mill per kilowatt-hour to the total fuel cost (increase from 2 19 to 2 32 mills per kilowatt-hour)

The variable costs for the hydraulic cyclone-Thorex plant combination can be broken down as follows

% Poison	U^{233} Inventory Cost, $/day	D_2O Processing Cost, $/day	Breeding Gain Loss due to Poison, $/day	Total Variable Cost, $/day
4 6	558	262 3	1,140	1,960
5 6	276 2	126 0	1,380	1,782
6 1	253 9	105 0	1,500	1,859

The variable costs for the Thorex alone processing scheme can be broken down as follows

% Poison	U^{233} Inventory Cost, $/day	D_2O Processing Cost, $/day	Breeding Gain Loss due to Poison, $/day	Total Variable Cost, $/day
4 6	1,206	576	1,140	2,931
5 6	954	447	1,380	2,780
7 0	840	324	1,710	2,870
9 0	660	228	2,184	3,072

The results of this survey indicate that the optimum core poison level is 5 6% and that the savings contributed by the hydraulic cyclones would be $998 (2780 - 1782) per day

The most important prerequisite to Thorex processing of core material is the cooling time needed to reduce the fission product activity to a level equal to or less than that attributed by the short-cooled blanket material with which the core solution will be integrated Processing of core solution to remove the soluble poisons on a 190-day period indicates a processing rate of 120 liters per day of core solution containing one day's production of insoluble fission and corrosion products from the entire core system as well as those soluble fission and corrosion products corresponding to the processing cycle and operating U^{233} concentrations An analysis of reactor core processing conditions is given in Table 4

The following insoluble fission product chains were considered to contribute the major activity (after 1 to 2 days' cooling) that is removed on a one-day cycle The actual activity would be much greater at discharge than those listed, but after reasonable cooling periods these products would be the major activity remaining and the ones which determine the cooling period The chains with the important member circled are

$$Nd^{147} \xrightarrow{11\ 6d} Pr^{147} \xrightarrow{2\ 64y} Sm\ (s)$$

$$Xe^{140} \xrightarrow{16s} Cs^{140} \xrightarrow{66s} Ba^{140} \xrightarrow{12\ 5d} La^{140} \xrightarrow{1\ 68d} Ce^{140}\ (s)$$

$$Xe^{143} \xrightarrow{1s} Cs^{143} \xrightarrow{s} Ba^{143} \xrightarrow{0\ 5m} La^{143} \xrightarrow{20m} Ce^{143} \xrightarrow{33h}$$

$$Pr^{143} \xrightarrow{13\ 8d} Nd^{143}\ (s)$$

Table 4

Analysis of K-23 Core Processing, One Reactor

23,000 liters (1 24 g U^{233}/liter = 28 5 kg U^{233}), flux, 3 2 x 10^{14}

	Alternate Cases		
	A	B*	C
Processing period, days	220	190	90
Volume processed per day, liters	100	120	250
U^{233} processed per day, g	124	149	310
Total poisons**	6 1	< 5 6	4 2
Activity, β-watts/day***	10,070	10,300	11,800
β-watts/liter of core solution	101	86	47
Activity after 5 days' cooling, β-watts/liter of AF	43 9	44 8	49 6
Cooling required to reach activity of 3 β-watts/liter AF, days	110	110	120
U^{233} inventory based on 5 days' cooling, kg	0 62	0 75	1 55
Based on time required to reach activity of 3 β-watts/liter, kg	13 6	16 4	37 2

*Case B chosen for this study

**Includes soluble fission products, corrosion products at 0 2 mil/year, and high-cross-section and rare gas fission products

***Includes 2-day or greater fission products (Fig 4 shows effect of cooling on activity of insoluble fission products)

[redacted]

ORNL-LR-DWG 4181

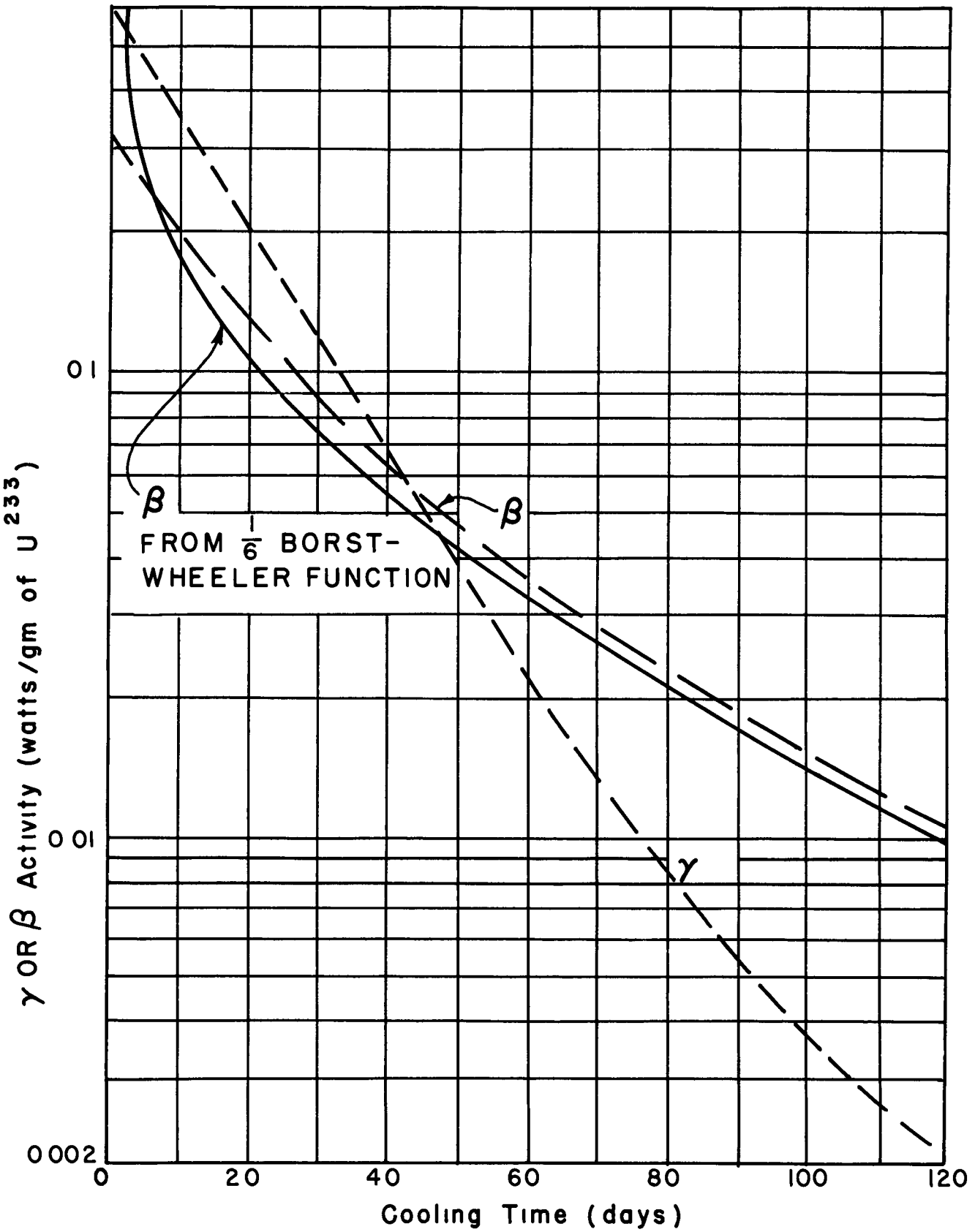

FIG 4 Effect of Cooling Time on Activity of Insoluble Fission Products Produced During One Day's Irradiation at 3.2×10^{14} Flux

$$Xe^{141} \xrightarrow{3s} Cs^{141} \xrightarrow{s} Ba^{141} \xrightarrow{18m} La^{141} \xrightarrow{3\ 7h} Ce^{141} \xrightarrow{32d} Pr^{141}\ (s)$$

$$Br^{89} \xrightarrow{4\ 5s} Kr^{89} \xrightarrow{3\ 3m} Rb^{89} \xrightarrow{15m} Sr^{89} \xrightarrow{54d} Y^{89}\ (s)$$

$$Kr^{91} \xrightarrow{10s} Rb^{91} \xrightarrow{14m} Sr^{91} \xrightarrow{9\ 7h} Y^{91} \xrightarrow{57d} Zr^{91}\ (s)$$

These fission products, when produced during a one-day core period, contribute 130 beta curies, 0 313 beta watt, and 0 575 gamma watt per gram of U^{233} irradiated The total expected beta activity on a one-day period from both soluble and insoluble fission products with a half-life of two days or more would be 1 06 watts per gram of irradiated U^{233}, and the total gamma activity would be 1 12 watts per gram of U^{233}

It can be seen that approximately one-sixth of the total activity (gamma and beta) contributed by all fission products with half-lives of two days or more produced during one-day's irradiation is contributed by the beta activity of these six chains Using the Borst-Wheeler[11] plots and assuming that the insoluble fission product beta activity after one-day's irradiation can be represented by one-sixth the Borst-Wheeler irradiation-decay function, it is found that the calculated beta activity and that obtained from one-sixth of the irradiation-decay function differ by less than 20% over the cooling range of 5 to 120 days A plot of beta activity in watts per gram of irradiated U^{233} obtained from activities of the six important insoluble fission product chains and that estimated from the Borst-Wheeler function is shown in Fig 4 This figure also includes the gamma activity of the insoluble fission products Approximately 85% of this activity is La^{140} gamma

3 2 Blanket Processing, Basis

The blanket will be processed on a 320-day period or at a rate of 67 kg of thorium per day per reactor This is the condition necessary to maintain 5 g of U^{233} per liter at 5 1 x 10^{13} n/cm^2/sec blanket system flux This condition corresponds to approximately 6,000 g of Mass-233 per ton of thorium present in the blanket In order to recover the Mass-233 represented by the breeding gain as isotopic U^{233} it becomes necessary to cool the blanket product for only 5 days (1,2) This cooling time also corresponds to the cooling time for minimum chemical plant Pa^{233} + U^{233} inventory charges The disadvantage in recovering the breeding gain quantity of Mass-233 as isotopic U^{233} comes from the high beta and gamma activity present after short cooling periods The high blanket-material beta activity of 9 8 watts per liter of extraction column feed (AF) results mainly from Pa^{233} and causes the primary damage to the solvent The high gamma activity results from La^{140}, which under these conditions would be approximately 100 curies per mole of thorium processed (1)

A more reasonable processing procedure would be to cool the blanket material sufficiently to allow lanthanum decay and beta activity decay to a reasonable solvent irradiation level The solvent irradiation level assumed in this study was 0 5 beta watt-hr per liter, however, an experimental investigation is in progress at ORNL which should determine the maximum allowable level A cooling period of 55 days for the blanket would be necessary to limit the total beta activity due to the blanket material in the AF stream to 3 watts per liter This activity level in conjunction with the beta activity of the 110-day-cooled core material would produce a radiation level of 0 5 beta watt-hr per liter of extractant in the A column The La^{140} activity will have decayed to 5 7 curies per mole of thorium in 55 days Processing of 5-day cooled blanket material along with 110-day cooled core material would increase the radiation level to 1 07 beta watt-hr per liter of extractant A blanket cooling time of 5 days would establish a Pa^{233} content in the A-column feed of 16% of the total Mass-233 from the blanket which is approximately the total breeding

gain quantity and later can be recovered as isotopic U^{233} in the second cycle On the other hand, a 55-day cooling time would reduce the Pa^{233} content in the A-column feed to 4 7% of the total Mass-233 from the blanket An analysis of blanket processing conditions is given in Table 5 An analysis of chemical processing conditions after integrating core and blanket process solutions is given in Table 6

The core system will contribute 450 g of U^{233} + 750 g of higher uranium isotopes at steady-state reactor conditions, which will be dissolved simultaneously with the blanket material each day This dilution will result in a first cycle uranium product of 68% U^{233} when a 55-day cooling period is used or 66% U^{233} when a 5-day cooling period is used A uranium product of these specifications may be used to feed back to the core to replace U^{233} burnup, however, it is apparent that a salable breeding gain product of only 68% U^{233} would not be desirable The breeding gain product when a 55-day cooling period is used will be divided into two fractions, one of isotopically pure U^{233} comprising 33% of the breeding gain, which will be recovered from the second cycle, and one of 68% U^{233} comprising 67% of the breeding gain

Even in a power economy there should be sufficient justification for a high-grade breeding gain product which may be used as research material, fuel for other reactors, or even as weapons material

3 3 D_2O Recovery

Two processes have been proposed by the Vitro Corporation for recovering D_2O from uranyl sulfate solutions and from slurries (9) One involves evaporating the material to approximately 60% solids and then completing the drying in a pan dryer at 500°C In the other all the evaporation is performed in a pan dryer Drying-tray-area requirements would be approximately 50 to 100 ft^2 per thousand pounds of uranium dried per day An economic analysis by Vitro(9) indicates that the cost of D_2O recovery will be \$0 30 to \$0 40 per pound in a plant handling 2 to 4 tons of D_2O per day However, integration of the D_2O recovery plant with the Thorex processing plant would reduce these costs to approximately \$0 35 per liter

Table 5

Analysis of K-23 Blanket Processing, One Reactor*

21,000 liters (6 g of Mass-233/liter = 126 kg of "23" and 21,000 kg of thorium)

		(U^{233})	(Pa^{233})
Processing period, days	320		
Volume processed per day, liters	67		
Mass-233 processed per day, g	405	338	67
Thorium processed per day, kg	67		
5 days' cooling, Pa^{233} is 16% of Mass-233			
β-activity of AF, watts/liter	9 8		
Mass-233 inventory, kg	14 79	1 69	13 10
Thorium inventory, kg	335		
55 days' cooling, Pa^{233} is 4 7% of Mass-233			
β-activity of AF, watts/liter	3 0		
Mass-233 inventory, kg	24 97	21 1	3 87
Thorium inventory, kg	3,685		
205 days' cooling, Pa^{233} is 0 1% of Mass-233			
β-activity of AF, watts/liter	0 46		
Mass-233 inventory, kg	82 5	82 5	0 0
Thorium inventory, kg	13,735		

The data given may be used in combination with either case A, B, or C in Table 4

Table 6

Analysis of K-23 Core and Blanket Processing, One Reactor

Core 190-day processing period, 120 liters/day underflow, 149 g of U^{233} per day, 5 6% poison

Blanket 320-day processing period, 67 liters/day discharged, 405 g of Mass-233 per day, 3 0% poison

	Case A	Case B	Case C*	Case D
Blanket cooling, days	5	5	55	205
Core cooling, days	5	110	110	110
Blanket β activity in AF, watts/liter	9 8	9 8	3 0	0 46
Core β activity in AF, watts/liter	44 8	3 0	3 0	3 0
Total β activity in AF, watts/liter	(54 6)	(12 8)	(6 0)	(3 46)
β irradiation of Thorex solvent, watt-hr/liter	(4 55)	(1 07)	(0 5)	(0 29)
Blanket Mass-233 inventory, kg	14 79	14 79	24 97	82 5
Core U^{233} inventory, kg	0 75	16 4	16 4	16 4
Total Mass-233 inventory, kg	(15 54)	(31 19)	(41 37)	(98 9)
Blanket inventory cost, $/g Mass-233 processed	0 242	0 242	0 413	1 35
Core inventory cost, $/g U^{233} processed	0 034	0 725	0 725	0 725
Blanket Mass-233 inventory cost, $/day	97 50	97 50	164 00	542 00
Core U^{233} inventory cost, $/day	5 02	107 80	107 80	107 80
Total Mass-233 inventory cost, $/day	(102 52)	(205 30)	(271 80)	(649 80)
Thorium inventory, kg	335	335	3,685	13,735
Thorium inventory cost, $/kg processed	0 0181	0 0181	0 199	0 742
Thorium inventory cost, $/day	(12 10)	(12 10)	(13 33)	(49 70)
Isotopic U^{233} recoverable, % of blanket product	16	16	4 7	0 0
Decontamination development needed?	Yes	Probably	Possibly	Unlikely

*Case C appeared most realistic on the basis of cooling and inventory considerations

In the scheme reported here, the entire D_2O evaporation from the blanket slurry is performed in the pan dryer immediately after the slurry is pumped from the blanket dump tanks The dried cake is then reslurried in light water and transferred to the blanket decay tanks However, for the core, the hydraulic cyclone underflow of $UO_2SO_4(D_2O)_x$ solution containing the insoluble fission and corrosion products, as well as the equilibrium soluble products, is routed to critically safe evaporators where the bulk of the D_2O is immediately distilled to leave a solution or slurry equivalent to about 1 0 M $U^{233}O_2SO_4$ in D_2O This solution is transferred to the critically safe slab-type core solution decay tanks where it is cooled for 110 days After this cooling the remainder of the D_2O is removed in a pan dryer at 500°C The resulting solid is then dissolved or slurried in H_2O to concentration equivalent to about 1 0 M $UO_2SO_4(H_2O)$ and transferred to the dissolver to be mixed with the decayed light-water blanket slurry This procedure for D_2O recovery from core solution was chosen because of the uncertainties associated with the extremely radioactive solids which would be present in the cyclone underflow The inventory charge on D_2O associated with the 110-day cooling period would be $17 per day for the reactor station A flowsheet for the D_2O recovery system is shown in Fig 5

3 4 Thorex Processing[4,5,7]

After a total of 55 days' cooling, the $ThO_2(H_2O)$ blanket slurry is transferred to batch dissolvers and converted completely to $Th(NO_3)_4$ by excess concentrated nitric acid containing fluoride ion for catalysis ThO_2 dissolution rates have been observed to vary as functions of calcination temperature and neutron irradiation A batch of 110-day-cooled $U^{233}O_2SO_4(H_2O)_x$ core solution and aluminum nitrate is added to the dissolver solution which is then treated for removal of the excess nitric acid and prepared as the aqueous feed to the continuous solvent extraction process In this process 42% tributyl phosphate in an organic paraffinic diluent is cascaded through a primary system of

ORNL LR-DWG 4182

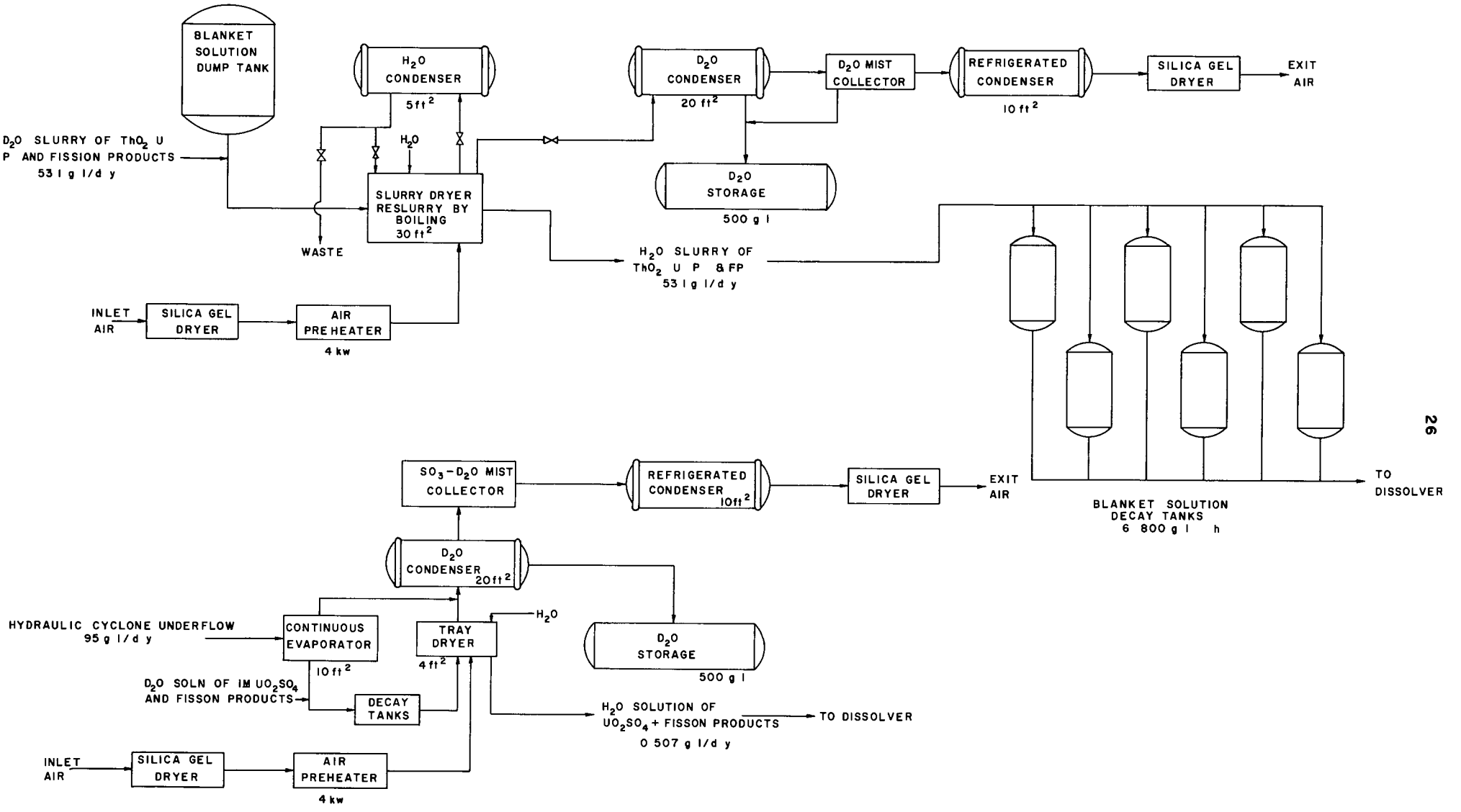

FIG 5 D_2O RECOVERY SYSTEM FOR THERMAL BREEDER REACTOR POWER STATION

four pulse-columns designed for IA, preferential extraction of the thorium and U^{233}, IB, preferential stripping of the thorium by dilute nitric acid, IC, stripping of the U^{233} with water, and ISR, sodium carbonate washing of the used organic solvent

The aqueous stream from column IA contains Pa^{233}, fission products, and aluminum nitrate that was introduced in the feed and scrub solutions as salting agent for the organic extraction of thorium and U^{233} This stream is concentrated by evaporation to acid-deficient 2 M $Al(NO_3)_3$ and stored in stainless steel tanks until the Pa^{233} decays to U^{233} Acid deficiency of the aluminum nitrate serves to inhibit fluoride-induced corrosion of the stainless steel storage equipment Subsequently, this solution serves as aqueous feed to a secondary solvent extraction system using 7 5% tributyl phosphate in three columns designed for IIA, extraction of the U^{233}, IIC, water stripping of the U^{233}, and IISR, sodium carbonate washing of the used organic solvent The aqueous waste from column IIA is concentrated to 3 M $Al(NO_3)_2OH$, and becomes the final radioactive waste from the Thorex process The U^{233} from column IIC is recovered from the stripping solution and isolated by an ion exchange process employing Dowex-50 This U^{233} will be isotopically purified by virtue of the fact that U^{232}, U^{234}, U^{238}, and/or their parents were previously extracted in column IA Recovery of the breeding gain in this purified form is considered vitally significant to establish a salable product and maximum write-off of power costs

The aqueous solution from column IB containing 0 25 M $Th(NO_3)_4$ and 0 2 N HNO_3 is concentrated by a factor of about 4 Oxalic acid is added to precipitate crystalline thorium oxalate, which is then dried and decomposed at about 500°C to form thorium oxide This oxide is then used for remote re-preparation of a D_2O slurry, containing 1000 g of thorium per liter, for return to the reactor blankets Remote operations will be required since the thorium product will contain the beta and gamma activity of Th^{234} at a level of approximately 10^8 d/m per milligram of thorium

The aqueous solution from column IC containing the bulk of the uranium product is processed by ion exchange for recovery and isolation of the U^{233} (7) This product is eluted as uranyl acetate, which is subsequently converted to anhydrous $U^{233}O_2SO_4$ and then prepared in D_2O solution for return to the reactor cores At equilibrium conditions of reactor operation this product will contain large quantities of U^{232} and higher isotopes which will reduce its value as weapons-grade material However, its reuse in the core solution would not be limited

Flowsheets for the cell and makeup areas of the Thorex plant are shown in Figs 6, 7, and 8

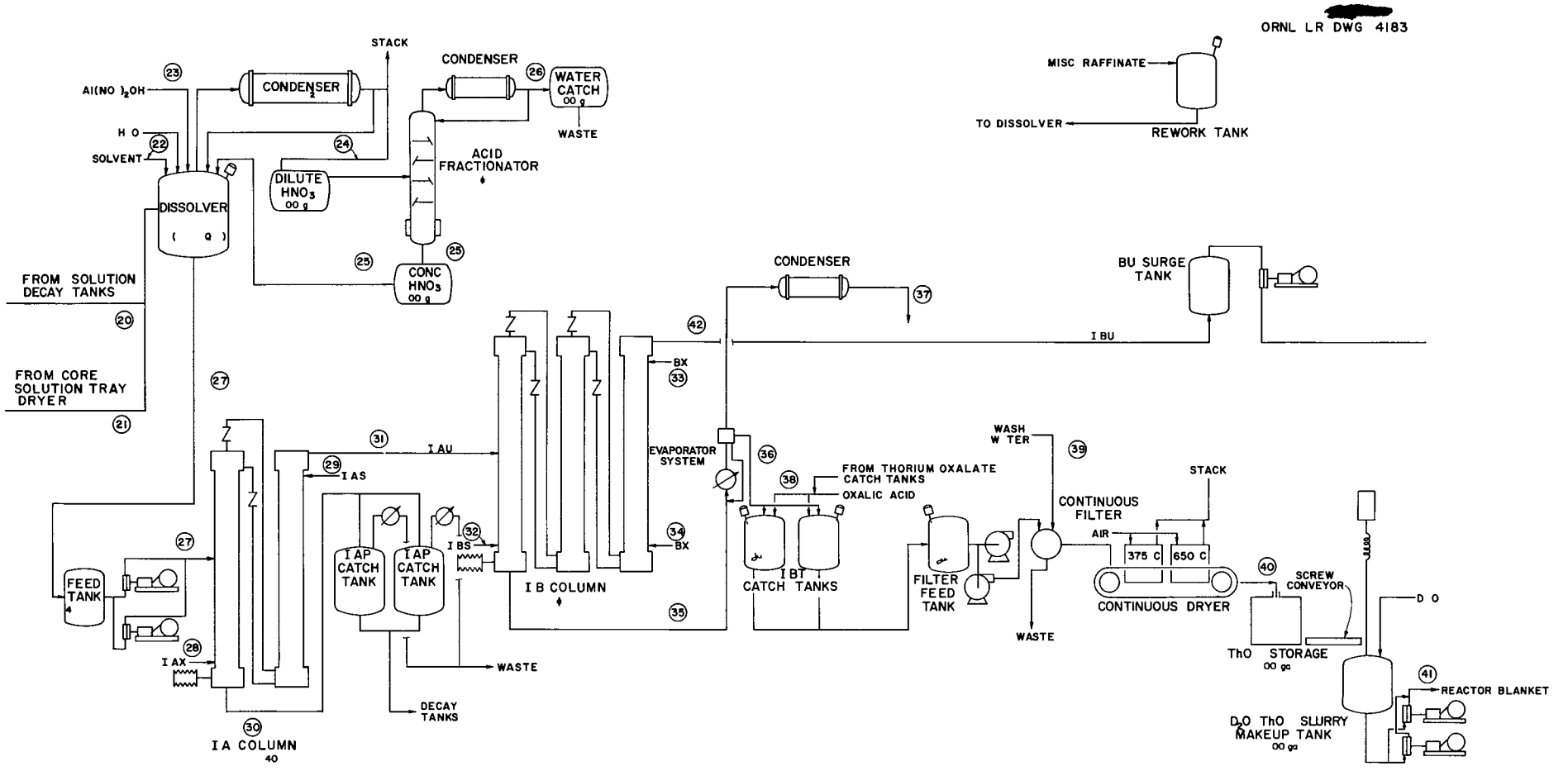

(20) 200 kg Th AS ThO
180 kg H O
~1150 g U
~ 50 g P

(21) ~0 45 kg U AS UO SO

(22) 275 lit 13_ HNO
0 075 _ F

(23) 285 lit 1_ Al (NO) OH

(24) 530 li 6 5_ HNO

(25) 255 l t 13_ HNO

(26) 255 lit 0 5_ HNO

(27) 575 li 5_ Th
0 5 _ Al

(28) 2850 li 42 5% TBP

(29) 575 li 0 6_ Al
0 4 _ ACID DEFICIENT

(30) 1035 lit 0 64 _ Al
200 g FISSION PRODUCTS

(31) 3000 li SOLVENT Th U

(32) 910 l 42 5 % TBP

(33) 3800 l t 0 005_ NO_3

(34) 2760 l t 0 24_ HNO

(35) 3450 lit 0 25_ Th(NO)

(36) 862 li 1 0 M Th(NO)

(37) 2588 l 0 02 _ HNO

(38) 170 kg OXALIC ACID (SOLID)

(39) 1000 li DEMINERALIZED WATER

(40) 227 kg ThO

(1) SLURRY 1000 g/l

ALL PROCESS STREAM QUANTITIES ARE ON DAILY BASIS

FIG 6 SCHEMATIC EQUIPMENT FLOWSHEET FOR THERMAL BREEDER REACTOR POWER STATION THOREX PROCESS SHEET I

[redacted]

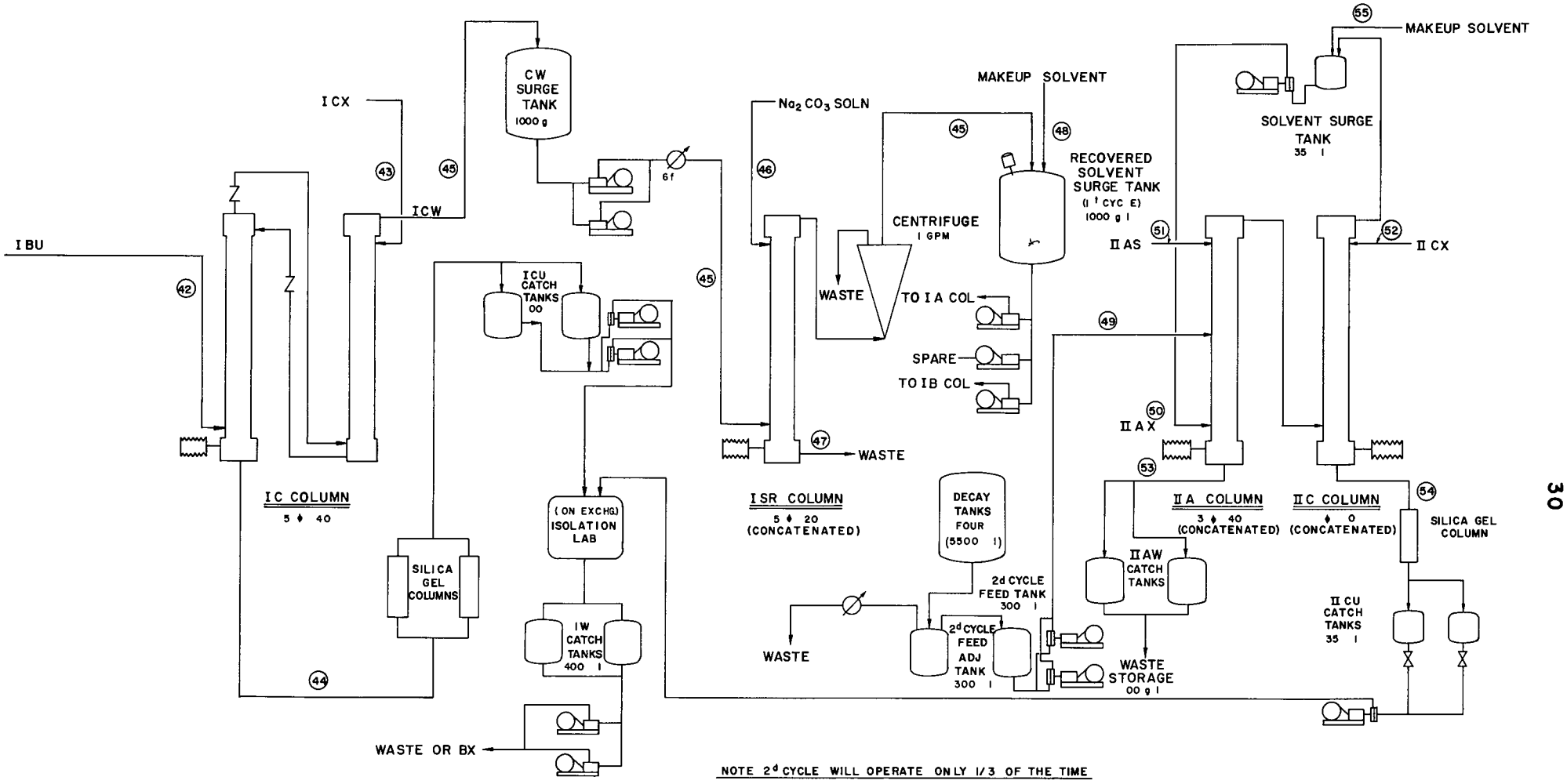

NOTE 2d CYCLE WILL OPERATE ONLY 1/3 OF THE TIME

(42) 3800 lit SOLVENT 1600 g U	(47) 380 l t SPENT N CO	(52) 100 l t 0 01_ HNO
(43) 760 lit 0 01_ HNO	(48) 38 lit 42 5% TBP	(53) 1096 l t 1 87_ Al
(44) 760 l t 1600 g U	(49) 996 l t 2 0_ Al 150 g U	(54) 100 lit 15 g/l OF U (CRITICALITY PROBLEM)
(45) 3800 l t SOLVENT	(50) 100 lit 75% TBP	(55) 3 l t 75% TBP
(46) 380 lit 0 2_ N CO	(51) 100 lit 0 6M Al 0 4M ACID DEF	ALL QUANTITIES ARE ON A DAILY BASIS

FIG 7 SCHEMATIC EQUIPMENT FLOWSHEET FOR THERMAL BREEDER REACTOR POWER STATION THOREX PROCESS SHEET 2

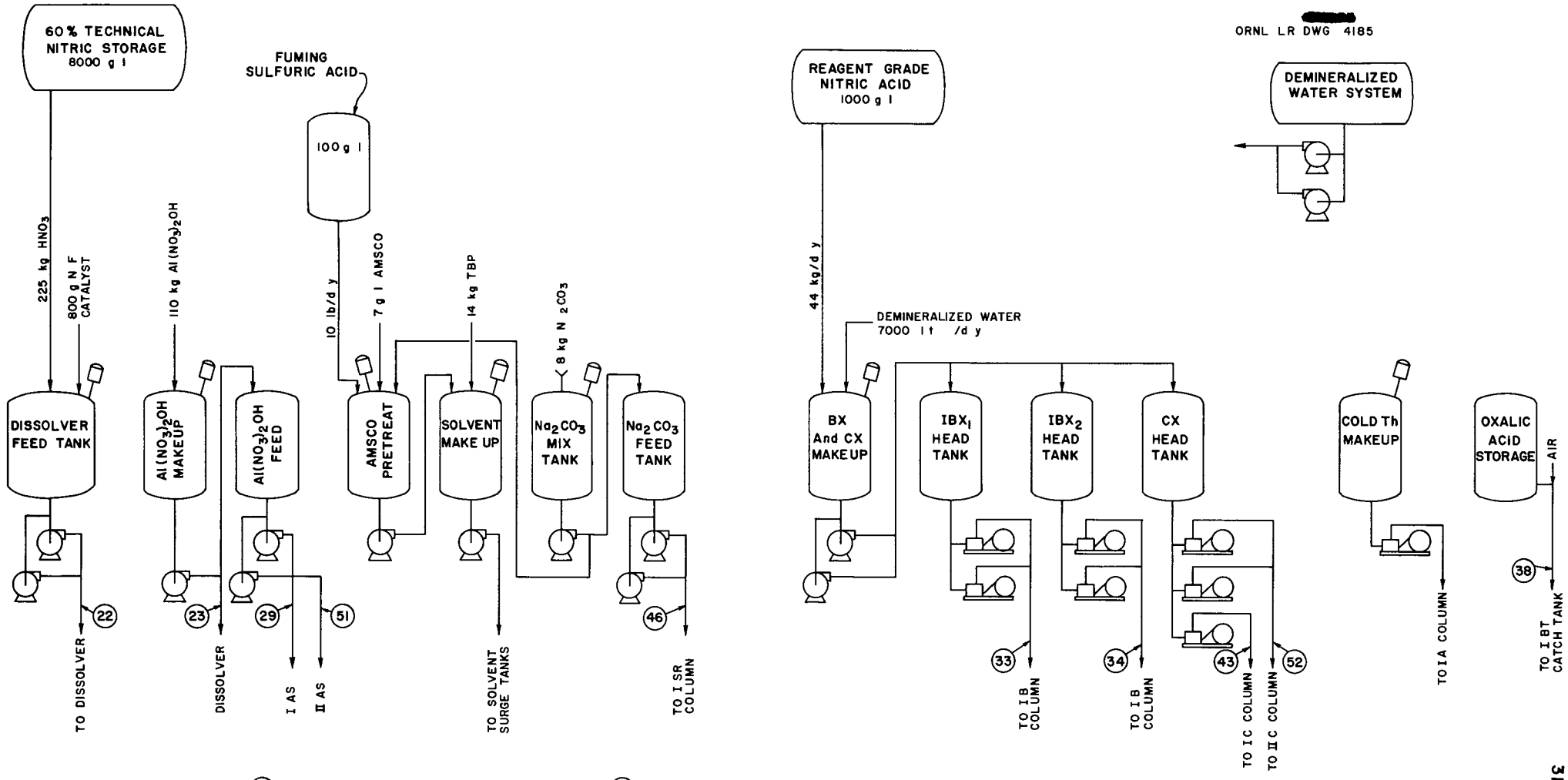

(22) 275 L t 13 M HNO_3
0.075 M F
(23) 285 L t 1 M $Al(NO_3)_2$ OH
(29) 575 L t 0 6 M $Al(NO_3)_2$ OH
0 4 M A d D f t
(33) 3800 L t 0.005 M HNO_3
(34) 2760 L t 0 24 M HNO_3

(38) 170 kg OXALIC ACID (SOLID)
(43) 760 L t 0 01 M HNO_3
(46) 380 L t 0 2 M N 2 CO_3
(51) 100 L t 0 6 M Al^3
0 4 M A d D f t
(52) 100 L t 0 01 M HNO_3

NOTE ALL QUANTITIES ARE ON A DAILY BASIS

FIG 8 SCHEMATIC FLOWSHEET FOR THERMAL BREEDER REACTOR POWER STATION THOREX PROCESS MAKEUP AREA

4 0 COST ESTIMATE OF PROCESSING FACILITIES

A cursory cost estimate of a chemical processing plant was made incorporating heavy water recovery, a 0 2-ton/day Thorex plant, reactor feed makeup, radiochemical and isolation laboratory, and operating facilities The total fixed investment is $5,798,300 (see Table 9) That part of the fixed investment represented by the direct cost of the manufacturing facilities is $3,571,400 The annual operating cost is $1,290,100 (see Table 7) The estimated cost of process equipment for this plant is of the same magnitude as the equipment cost for the Thorex pilot plant which has the same capacity

The addition of hydraulic cyclones to the feed end of the Thorex plant requires an additional fixed investment of $191,000 and an annual operating cost of $40,000 This cyclone cost represents a total cost of $276 per operating day

A description of the process and schematic flowsheets of the equipment required are included in preceding sections In designing a facility for housing this equipment a philosophy of guarded optimism was used Although there is some departure from standard techniques, a conservative approach was used in estimating the process canyon space requirements, laboratory equipment, and physical separation of various processing areas The design of the facility was made primarily in order to make the cost estimate of the fixed investment as realistic as possible The building layout is a tentative design and should not be considered an optimum arrangement

The arrangement of process cells, laboratory, and operating building is shown in Fig 9 This plant is designed to process reactor fuel from a power station in which three large cells for reactors are arranged in line and for which a tentative building arrangement has been made [3] Therefore, the general arrangement of the chemical processing building has already been partially determined by the reactor building arrangement and the necessity of placing the hydraulic cyclone cells in close juxtaposition to the reactor high-pressure systems with which they are integrated The three cyclone cells are butted against the wall of the reactor building to ensure a minimum volume for the reactor high-

ORNL LR DWG 4186

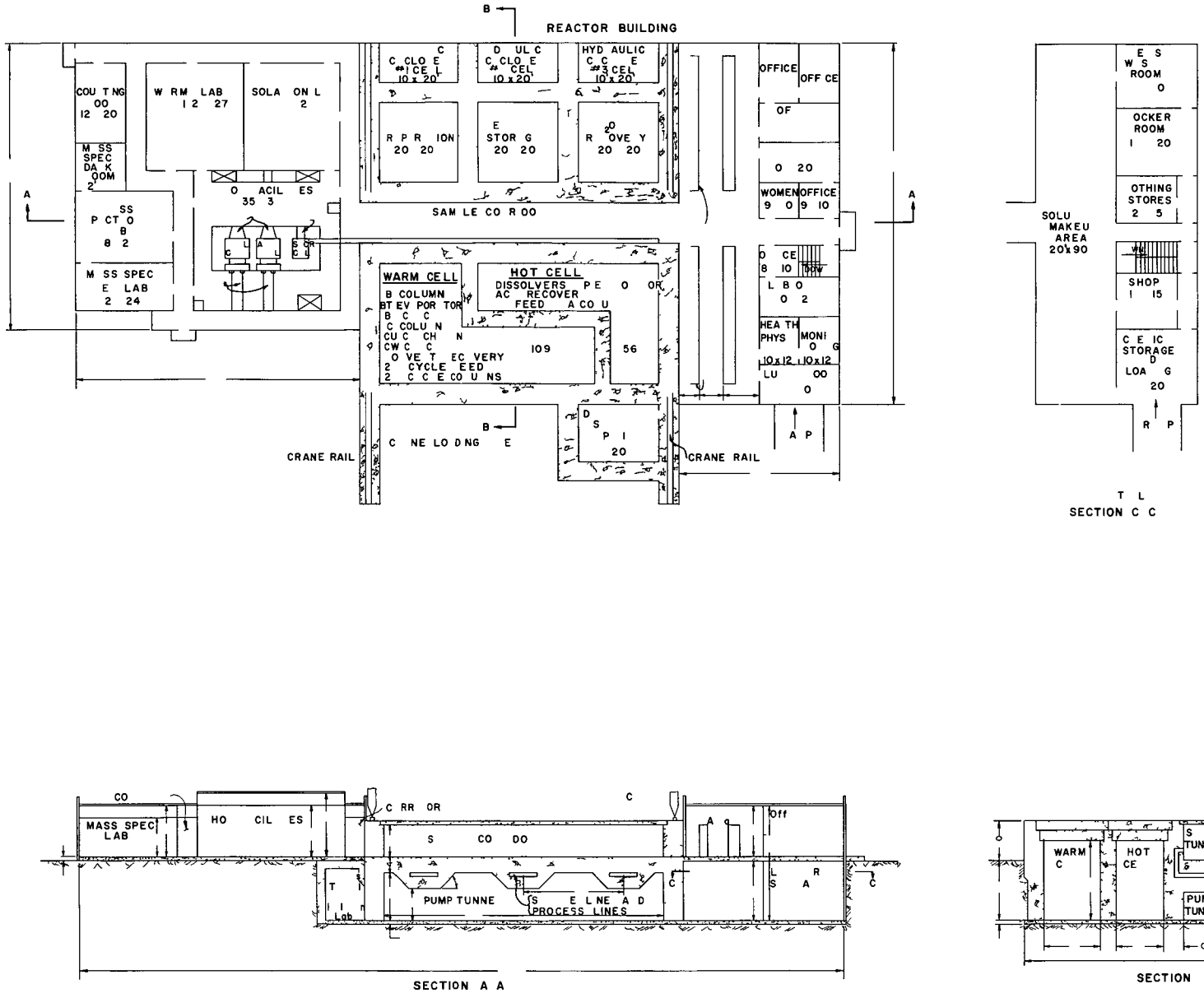

FIG 9 TENTATIVE CHEMICAL PROCESS BUILDING FOR THERMAL BREEDER REACTOR POWER STATION

pressure systems and the remainder of the processing canyon is an extension of the cyclone cells, perpendicular to the reactor building The relation of the chemical plant to the reactor and turbogenerator buildings is shown in Fig 10

Immediately adjacent to the cyclone-separator cells there are three cells for (1) heavy water recovery, (2) decay storage, and (3) blanket makeup These cells, with the cyclones, constitute that part of the chemical processing system involving heavy water solution and slurry handling and are separated from the Thorex processing canyon which is designed for underwater maintenance

The Thorex process canyon is separated from the heavy water system by sampling and pump corridors which service both systems Pipe lines connecting the two systems run through shielded conduits in the roof of the pump corridor The Thorex canyon is divided into two main areas for hot and warm equipment The hot cell contains dissolution, feed adjustment, acid recovery, and Thorex A-column equipment, the warm area contains B and C columns, solvent recovery, and isotopic U^{233} second cycle equipment Both areas are run dry and are flooded either simultaneously or separately for underwater maintenance At the end of the building, adjacent to the Thorex cells, is a pool for partially decontaminated equipment, and a crane loading area

Maintenance is accomplished by direct means in the heavy water system After sufficient chemical decontamination, the cells are maintained and equipment is replaced from the top of the cell The Thorex system is flooded for underwater maintenance Coffins are provided for reducing the radioactivity to tolerable levels while partially decontaminated equipment is being transported from the cells through the cell roof to the storage pool All cells are serviced by a Gantry crane which is used to handle roof plugs from individual shielded compartments and for installing and removing equipment

The product isolation laboratory and the blanket makeup cell are located on the side of the processing plant adjacent to the reactor feed

[redacted]

ORNL-LR-DWG 4187

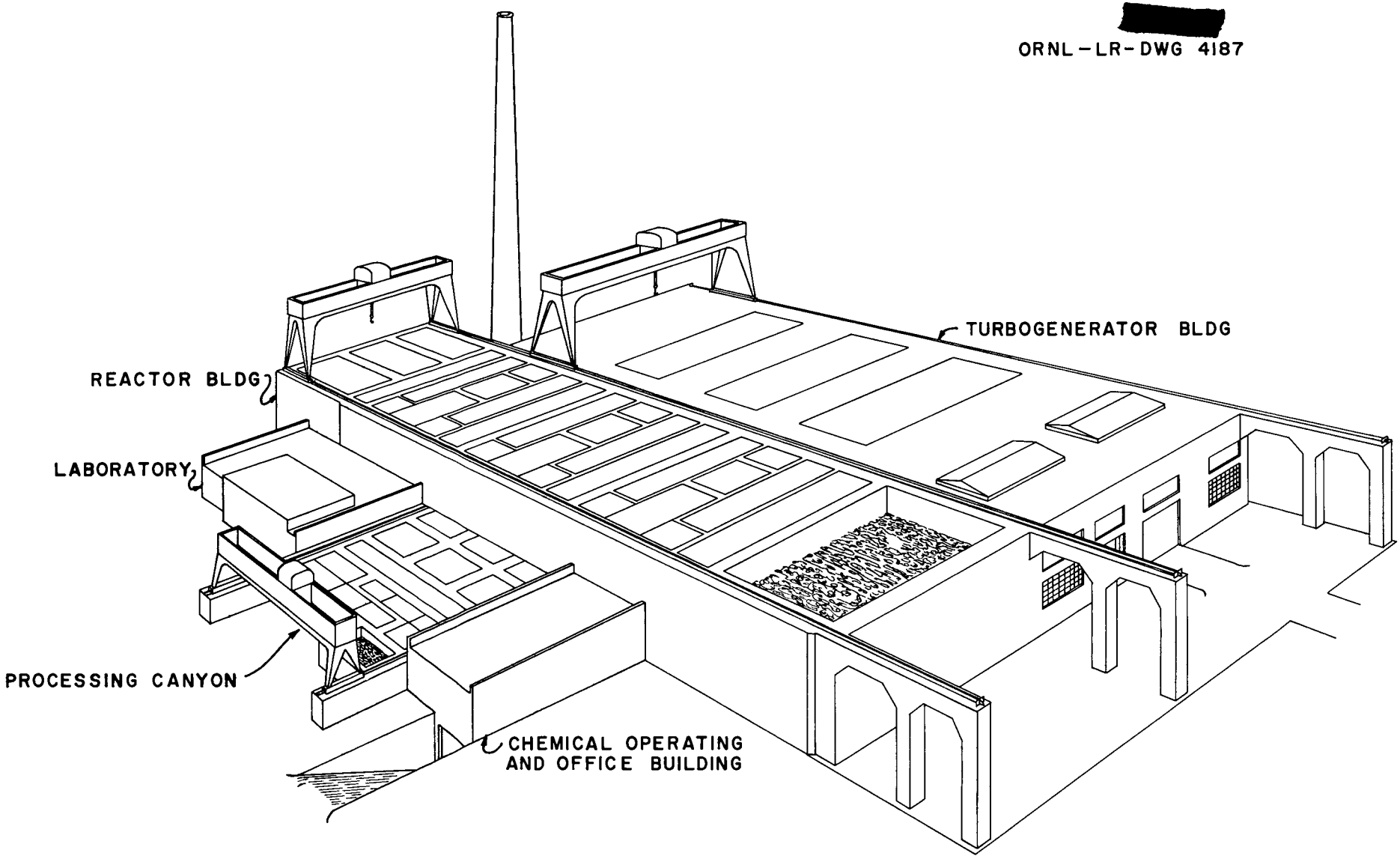

FIG 10 TWO-REGION REACTOR STATION WITH PROPOSED CHEMICAL PLANT

and low-pressure equipment The isolation laboratory is integrated in a radiochemical laboratory building containing hot and warm analytical facilities and a mass spectrometer laboratory (see Appendix I for analytical requirements and methods) Uranium product from the Thorex warm cell is piped to the isolation laboratory through an access tunnel immediately under the laboratory area

The laboratory building is arranged so that the hot analytical facilities, which consist of a storage cell and two analytical cells, are conveniently centered on the shielded sample station conveyor which is located in the sample corridor Each cell is equipped with high-density windows, and the analytical cells have doors which roll open on tracks for easy access to the remote equipment A large section of the laboratory area is utilized by a mass spectrometer laboratory for D_2O and U^{233} analysis Two mass spectrometers are required because (1) deuterium and uranium, at different ends of the spectrum, require two different types of ion current sources, and (2) U^{233} is analyzed as UF_6 by a thermal emission method and because of its high alpha activity must be handled in a hood, while D_2O is analyzed by equilibration with deuterium It is questionable whether a U^{233} mass analysis is required, because for reactor control accurate knowledge of the U^{233} content of the uranium recycled to the reactor is apparently not needed However, because excess U^{233} is made which is disposed of as a fuel for other reactors, weapons material, etc , and since the breeding gain might be diluted with higher uranium isotopes (depending on the blanket cooling period before processing), the mass analysis was considered necessary for this estimate

The operating, solution makeup, office, change room, shop, and chemical storage areas are located on the other side of the process canyon with easy access to all sections of the process building The sample corridor separating the process building connects the laboratory and operating buildings

It seems reasonable to assume that the chemical plant can purchase steam, water, electricity, and probably high-pressure air from the reactor station For this reason, no investment cost has been included for these items In addition, other economies will result from sharing the following facilities

(1) Stack for dispersal of off-gas

(2) Instrument repair shop

(3) Maintenance personnel

(4) Overhead facilities and personnel such as those for fire protection, guards, etc

4 1 Cost of Hydraulic Cyclone Processing

The cost of hydraulic cyclone processing was estimated from the following assumptions

(1) The cyclones will be housed in three individual cells adjacent to the center section of the reactor building The size of these cells will be 20 by 10 by 25 ft, and they will have 5-ft-thick concrete walls lined with stainless steel

(2) One operator per shift will be needed for the three-cyclone assembly

The breakdown of the cost is

Hydraulic cyclone system	$12,000
Pumps	9,000
Valves and piping	5,000
Instrumentation	1,000
Tankage	2,000
Total delivered cost	$29,000
Installation	7,250
Total equipment for each hydraulic cyclone system	36,250
Total equipment for three hydraulic cyclone systems	$108,750

Cell costs	
Excavation	$ 2,100
Concrete	35,000
Stainless steel liners	45,200
Total cell costs	$ 82,300
Total hydraulic cyclone costs	191,050
Amortization at 15%, $/year	28,700
Operation and maintenance labor, $/year	40,000
Maintenance material, $/year	12,000
Total cost per year, $	80,700
Total cost per operating day, $	276
Total cost hydraulic cyclones per day, $	92

4 2 Cost of Thorex Plant Processing

Table 7

Annual Operating Costs for Thorex Chemical Plant

Based on plant factor of 0 8

Raw materials	$ 48,000
Labor, 80 men at $6500/man-year	520,000
Overhead, 75% of labor	390,000
Operating supplies, 10% of labor[a]	52,000
Electricity 100 kw at $0 007	4,900
Steam, 70,000 lb/day at $0 30 per 1000 lb	6,100
Water, 15,000 gal/day at $0 20 per 1000 gal[b]	900
Compressed air, 50 cfm at $0 10 per 1000 ft^3[b]	2,100
Maintenance material, 50% of maintenance labor, based on 30 men	97,500
Analytical lab material, $\frac{\$0\ 70^{(c)}}{\text{analysis}} \times \frac{48{,}000 \text{ analyses}}{\text{year}}$	34,000
Waste storage, 60 gal/day at $1 per gallon[d]	17,600
Subtotal	$1,173,100
Contingency, 10%	117,000
Total annual operating cost	$1,290,100

[a] C H Chilton, "Cost Estimating Simplified", Chemical Engineering, 58 (June) 108 (1951)

[b] E C Dybdal, "Engineering and Economic Evaluation of Projects", Chemical Engineering Progress, 46 57 (1950)

[c] Based on ORNL pilot plant laboratory costs

[d] For stainless steel tankage

Table 8

Raw Materials for Thorex Process

Based on full operating day

	lb/day	$/lb	$/day
60% HNO_3 (tech grade)	496	0 05	25
NaF (tech grade)	2	0 12	
Aluminum nitrate	243	0 15	37
Sulfuric acid, fuming	10	0 03	
Amsco diluent	7 gal/day	0 35/gal	3
Tributyl phosphate	31	0 64	20
Sodium carbonate	18	0 05	1
60% HNO_3 (reagent grade)	98	0 15	15
Oxalic acid (tech grade)	375	0 165	62
Demineralized water chemicals			1
Total raw materials			$164

Table 9

Manufacturing Facilities Summary

Main process buildings	$1,072,900	
Auxiliary buildings	150,000	
Equipment, piping, and instrumentation	1,168,700	
Laboratory equipment	254,900	
Special equipment and facilities	125,000	
Protactinium-decay tank farm	85,600	
Subtotal	$2,857,100	
Contingency, 25% of total manufacturing facilities	714,300	
Total		$3,571,400
Site preparation, 7 5% of manufacturing facilities		267,900
Subtotal		$3,839,300
Engineering and design, 15% of subtotal		575,900
Construction (supervision, insurance, taxes, overtime, etc), 20% of subtotal		767,900
Contractor's fee or profit, 3% of subtotal		115,200
Preoperation and startup[a] plus working capital		500,000
Total fixed investment		$5,798,300

[a] Based on three months cold operation as a training period and one month's operating cost as working capital

Table 10

Manufacturing Facilities

Main Process Building

Concrete for cell construction, 4,000 yd^3 at $100 per cubic yard	$ 400,000
Stainless steel lining, 14,500 ft^2 at $13 per square foot	188,500
Excavation, 5,000 yd^3 at $3 per cubic yard	15,000
Gantry crane	100,000
Make-up, operating areas, etc , 7,200 ft^2 at $30 per square foot	216,000
Laboratory area, 5112 ft^2 at $30 per square foot	153,400
Total	$1,072,900

Auxiliary Buildings

5,000 ft^2 at $30 per square foot, integrated with reactor plant	150,000

Major Process Equipment

Number Required	Item	Description	Delivered Cost
		Radioactive cell area, Thorex process	
2	Dissolvers	800 gal jacketed, 309 SNb agitated	$ 18,000
2	Dissolver off-gas condensers	100 ft^2, stainless steel tubes carbon steel shell	5,500
1	Dilute nitric acid catch tank	200 gal, jacketed	2,000
1	Condenser for acid recovery system	20 ft^2 stainless steel tubes, carbon steel shell	1,000
1	Water catch tank	200 gal, jacketed, stainless steel	2,000
1	Acid fractionator	12 in diam by 15 ft with reboiler, 309 SNb	6,000
1	Feed tank	400 gal, jacketed, stainless steel	3,200
1	Pulse column, extraction	5 in diam by 40 ft concatenated	8,000

Table 10 Continued

Number Required	Item	Description	Delivered Cost
2	IAP catch tanks	500 gal, jacketed, stainless steel	7,000
1	Rework tank	200 gal, jacketed, stainless steel, one agitated	2,250
1	BU surge tank	200 gal, stainless steel	2,250
1	Partitioning column	5 in diam by 45 ft	8,500
1	BT evaporator	15 ft^2 heating surface, stainless steel, with necessary surge vessel, etc	6,000
1	Condenser for BT evaporator	15 ft^2, stainless steel tubes, carbon steel shell	800
2	BT catch tanks	400 gal, jacketed, stainless steel, with agitators	7,600
1	Filter feed tank	400 gal, jacketed stainless steel, with agitator	3,800
1	Continuous filter	1000 lb/day	4,000
1	Continuous dryer		27,000
1	ThO_2 storage tank	200 gal, stainless steel	2,000
1	Screw conveyor	Stainless steel	1,000
1	D_2O-ThO_2 slurry makeup tank	500 gal, agitated, stainless steel, with weighing device	5,600
1	Strip column	5 in diam by 40 ft	8,000
2	CU catch tanks	400 gal, stainless steel, jacketed	6,400
2	IW catch tanks	400 gal, stainless steel, jacketed	6,400

Table 10 Continued

Number Required	Item	Description	Delivered Cost
	Isolation laboratory equipment	Facilities for isolating U^{233} and converting to UO_2SO_4, not to include building, installation, or piping	$ 15,000
3	Silica gel columns	6 in diam by 48 in	1,800
2	Solvent surge tanks	1000 gal, stainless steel, jacketed, one agitated	12,000
1	SR column, pulsed	5 in diam by 20 ft	4,500
1	Solvent heater	6 ft^2, stainless steel tubes, carbon steel shell	400
1	Centrifuge	1 gpm, stainless steel	5,000
6	Pulse generators		20,000
8	Lapp Pulsafeeders		20,000
7	Pumps (centrifugal and positive displacement)		5,250
1	2nd cycle feed adjustment tank	300 gal, stainless steel, jacketed	2,700
1	2nd cycle feed tank	300 gal, stainless steel, jacketed	2,700
1	2nd cycle extraction column (pulsed)	3 in diam by 40 ft, concatenated	6,500
1	2nd cycle strip column	1 in diam by 40 ft, packed, concatenated	3,000
2	IIAW catch tanks	400 gal, stainless steel, jacketed	6,400
2	IICU catch tanks	35 gal, stainless steel, 5 in diam	1,400
1	Solvent surge tank	35 gal, stainless steel, 5 in diam	700
2	IAW catch tank condensers	10 ft^2	2,000
	Subtotal		$253,650

Table 10 Continued

Number Required	Item	Description	Delivered Cost
	Makeup area, Thorex process		
1	Nitric acid storage (tech grade)	8,000 gal, stainless steel	$ 8,000
1	Dissolver feed tank	300 gal, agitated, stainless steel	1,800
1	Aluminum nitrate scrub makeup tank	300 gal, agitated, stainless steel	1,800
1	Aluminum nitrate scrub feed tank	300 gal, stainless steel	1,500
1	Solvent makeup tank	300 gal, stainless steel, agitated	1,800
2	Sodium carbonate makeup and feed tanks	300 gal, stainless steel, one agitated	3,300
1	Nitric acid storage (reagent grade)	1,000 gal, stainless steel	2,200
1	BX and CX makeup tank	1,000 gal, stainless steel, agitated	2,600
1	BX_1 head tank	1,000 gal, stainless steel	2,200
1	BX_2 head tank	750 gal, stainless steel	1,800
1	CX head tank	500 gal, stainless steel	1,500
1	Cold thorium makeup tank	300 gal, stainless steel, agitated	1,500
1	Oxalic acid storage tank	500 gal, with pneumatic conveyor	2,000
1	Demineralized water system	5 gpm, with 2,000-gal aluminum storage tank	7,000
22	Pumps	Centrifugal or positive displacement	16,500
	Subtotal		$ 55,500

Table 10 Continued

Number Required	Item	Description	Delivered Cost
	Major equipment for handling and storing thorium and uranium prior to chemical processing		
1	Continuous evaporator for UO_2SO_4	4 in diam, stainless steel, 10 ft^2	$ 3,000
1	Tray dryer for UO_2SO_4	4 ft^2, stainless steel, special design with heating equipment	6,000
2	Condensers for D_2O	Stainless steel, 20 ft^2	2,000
2	Mist collectors	Electrostatic, stainless steel	8,000
2	Refrigerated condensers	10 ft^2, stainless steel	1,600
4	Silica gel dryers	10 in diam by 3 ft, stainless steel	3,000
2	Air preheaters	4 kw, Calrod unit	1,000
2	D_2O storage tanks	500 gal, stainless steel	3,200
1	Dryer for ThO_2 slurry	30 ft^2, stainless steel, special design with heating equipment	12,000
1	H_2O condenser	5 ft^2, stainless steel	400
3	Core fission product tanks	60 gal capacity, slab tanks with cooling coils	6,000
6	Blanket product decay tanks	800 gal, stainless steel, jacketed	30,000
	Subtotal		$ 76,200

Table 10 Continued

Total delivered equipment	$ 385,350	
Installation cost, 0 14 x delivered equipment cost	54,000	
Total installed equipment	439,350	
Piping, valves, etc , 1 0 x installed equipment cost	439,350	
30 samplers at $3,000 each installed[a]	90,000	
Instrumentation, installed[a]	200,000	
Total equipment, piping, and instrumentation		$1,168,700

[a] Thorex pilot plant cost

Laboratory Equipment and Facilities

2 Mass spectrometers	75,000
2 α proportional counters	2,500
2 β-γ proportional counters and pigs	3,000
1 γ ionization chamber	4,500
4 Glove boxes	10,000
3 Beckman Model K titrators	2,200
3 Beckman Model B spectrometers	2,200
2 Pipettors	3,000
1 Specific gravity falling-drop setup	2,000
1 ORNL automatic titrator with positive feed microburet	4,000
6 Model 8 manipulators	30,000
2 Zinc bromide windows	6,600
1 Cerium glass window	10,000
Concrete for analytical cells at $100 per cubic yard	12,500
Barytes concrete at $200 per cubic yard	10,400
Reinforcing	1,600

Table 10 Continued

2 Access door dollies and tracks	$ 1,200	
Cell off-gas tie-in	1,000	
2 Analytical balances	1,200	
6 Double-island type 6-ft laboratory benches	6,000	
10 Hoods, 6 ft	23,000	
4 Wall-type 6-ft laboratory benches	2,000	
2 Lavatory type sinks	500	
1 Decontamination hood, 4 x 6 ft, stainless steel	2,500	
Service racks	32,000	
Cell lighting	2,000	
Cell services	2,500	
Demineralized water still	1,500	
Total		$ 254,900
Special Equipment and Facilities		
Radiation monitoring equipment	15,000	
Dilute waste evaporator and allied equipment	25,000	
Vessel and cell off-gas system and duct work	85,000	
Total		$ 125,000
Protactinium Decay Tank Farm		
4 Stainless steel tanks, 5,500 gal each, installed	50,200	
4 Condensers, stainless steel, 40 ft^2 each, installed	8,200	
200 yd^3 concrete at $80 per cubic yard	16,000	
600 yd^3 excavation and backfill at $2 per cubic yard	1,200	
Piping and valves	10,000	
Total		$ 85,600

5 0 REFERENCES

(1) Arnold, E D and A T Gresky, "Thorium Irradiation Study U^{233} Production and Neutron Economy Associated with Thorium Blankets," ORNL-1817 (in preparation)

(2) Arnold, E D and A T Gresky, "Thorium Irradiation Study in Relation to Present and Projected Thorium Programs," ORNL-1818 (in preparation)

(3) Briggs, R B , "Aqueous Homogeneous Reactors for Producing Central-Station Power,' ORNL-1642 (May 13, 1954)

(4) Gresky, A T , M R Bennett, S S Brandt, K L Mattern, W T McDuffee, B G Ryle, J E Savolainen, and R P Wischow, Progress Reports Laboratory Development of the Thorex Process, Reports ORNL-1367, 1431, 1518, and 1610 (November 1951 to June 1953)

(5) Gresky, A T , "The Thorex Process," Reactor Sci Technol 4(2): 43 (June 1954)

(6) Ott, H C , Meeting of Evaluation Groups, Argonne National Laboratory, June 22 to June 23, 1953, WASH-148 (Aug 19, 1953)

(7) Overholt, D C , "Ion Exchange Processes for Plutonium and U^{233} Isolation," Reactor Sci Technol 3(3) 9 (September 1953)

(8) The Dorr Company, "Type TM DorrClone," Bulletin No 2502

(9) Vitro Corporation of America, Project Summary, D_2O Recovery (57-B), KLX-1611 (April 1, 1953)

(10) Vitro Corporation of America, "Homogeneous Reactor Processing - Progress Report for May 1953," KLX-1615 (June 10, 1953)

(11) Wende, C W J , "TNX Report No 7" (January 1944)

APPENDIX I

Table 11

Estimated Analytical Requirements for K-23 Reactor Power Station Chemical Plant

Sample Source	Activity	Analyses Required	Samples per Day	Analyses per Day
Dissolver	High β, γ, low α	Th, OH^-, Sp Gr	2	6
Adjusted feed	High β, γ, low α	Th, OH^-, Al, Pa^{233}, β,γ	2	14
IAP	High β, γ, no α	U, Th, Pa, Al	3	12
IAP concentrate	High β, γ, no α	U, Th, Pa, Al	3	12
ICU	Low β, γ, high α	U, Pa, Th, β, γ	3	15
ICW	Low β, γ, no α	U, Pa	3	6
IBT concentrate	High β, γ, low α	U, β, γ, Th, Th^{234}	1	5
IIAF	High β, γ, high α	U, Al, Pa, OH^- β, γ	3	18
IIAW	High β, γ, low α	U, Pa, β, γ	3	12
IICU	Low β, γ, high α	U, Pa, Th, β, γ	3	15
IICW	Low β, γ, no α	U, Pa	3	6
Isolation laboratory product I and II	Low β, γ, high α	U assay, isotopic analysis, Th, Pa, β, γ	6	36
D_2O-ThO_2 slurry	High β, γ, low α	D_2O, Th	1	2
UO_2SO_4 reactor feed	Low β, γ, high α	U, D_2O	1	2
D_2O storage (2)	High β, γ, low α	D_2O	2	2
Blanket decay tanks	High β, γ, high α	Th, U, Pa, β, γ, Th^{234}	1/3	2
Core decay tanks	High β, γ, high α	U, β, γ	1/3	1
Total			39-2/3	166

Table 12

Analytical Methods and Equipment Required for K-23 Reactor Power Station Chemical Plant

Analysis	Method	Equipment
Thorium	Colorimetric	Beckman Model B spectrophotometer
Th^{234}	Radiochemical	β, γ proportional counter and lead pig
OH^-	Potentiometric titration	Beckman Model K titrator
Specific gravity	Falling drop	ORNL Model specific gravity setup
Aluminum	Potentiometric titration	Beckman Model K titrator
Pa^{233}	Radiochemical	β, γ proportional counter
U^{233}	Radiochemical	α proportional counter
β	Radiochemical	β, γ proportional counter and pig
γ	Radiochemical	γ ionization chamber and vibrating reed electrometer
U assay	Potentiometric titration	Microburet, accessories, and glove box
U isotopic analysis	Mass spectrometer	Ingram mass spectrometer
D_2O analysis	Mass spectrometer	Consolidated mass spectrometer

APPENDIX II

Fission Product Poisons

The fission product poisons buildup in the core of the two-region thermal breeder was simulated using part of the ORNL Reactor Controls Computer The derived formulas in the development of the equation used in this simulation, omitting electrical and graphic conversion and scale factors, are as follows

$$\frac{dN_1}{dt} = \phi \Sigma_f y - (\lambda_1 + \phi\sigma_1)N_1$$

Poison cross-section $= \Sigma_p = N_1\sigma_1 \quad (cm^2)$

Therefore,

$$\frac{d\Sigma_p}{dt} = \phi \Sigma_f y \sigma_1 - (\lambda_1 + \phi\sigma_1)\Sigma_p$$

or,

$$\Sigma_p = \frac{\phi \Sigma_f y \sigma_1}{\lambda_1 + \phi\sigma_1}(1 - e^{-(\lambda_1 + \phi\sigma_1)t})$$

The term percent poison given on the graphs of this analysis (see Figs 11, 12, 13) was defined as

$$\% \text{ poison} = (100)\frac{\Sigma_p}{\Sigma_f} = (100)\frac{N_1\sigma_1}{\Sigma_f}$$

The term "percent loss to poison" used in this report is conventionally defined as

$$(100) \times \frac{\text{neutrons absorbed by poison}}{\text{neutrons absorbed by } U^{233} \text{ in core}} \quad \text{or} \quad (100)\frac{\Sigma_p}{\Sigma_a}$$

Therefore, to convert 'percent poison' as given in graphs to "percent loss to poison, use the following

$$\% \text{ loss to poison} = (100)\left(\frac{\Sigma_p}{\Sigma_f}\right)\left(\frac{\Sigma_f}{\Sigma_a}\right) = 100\left(\frac{\Sigma_p}{\Sigma_f}\right)\left(\frac{\sigma_f}{\sigma_a}\right)$$

$$= (\% \text{ poison})\left(\frac{\sigma_f}{\sigma_a}\right) = (0\ 92)(\% \text{ poison})$$

Nomenclature

N_1 = number of atoms of a given species in the entire core system

ϕ = average thermal neutron flux over the entire core system

Σ_f = total macroscopic fission cross-section of the U^{233} in the entire core system (cm^2)

Σ_a = total macroscopic absorption cross-section of the U^{233} in the entire core system (cm^2)

y = fission yield of a given species

σ_1 = microscopic cross-section of a given species (cm^2)

λ_1 = radioactive decay constant for a given species

t = time (sec)

Σ_p = total macroscopic cross-section of poison (cm^2)

σ_f = microscopic fission cross-section of U^{233} (barns)

σ_a = microscopic absorption cross-section of U^{233} (barns)

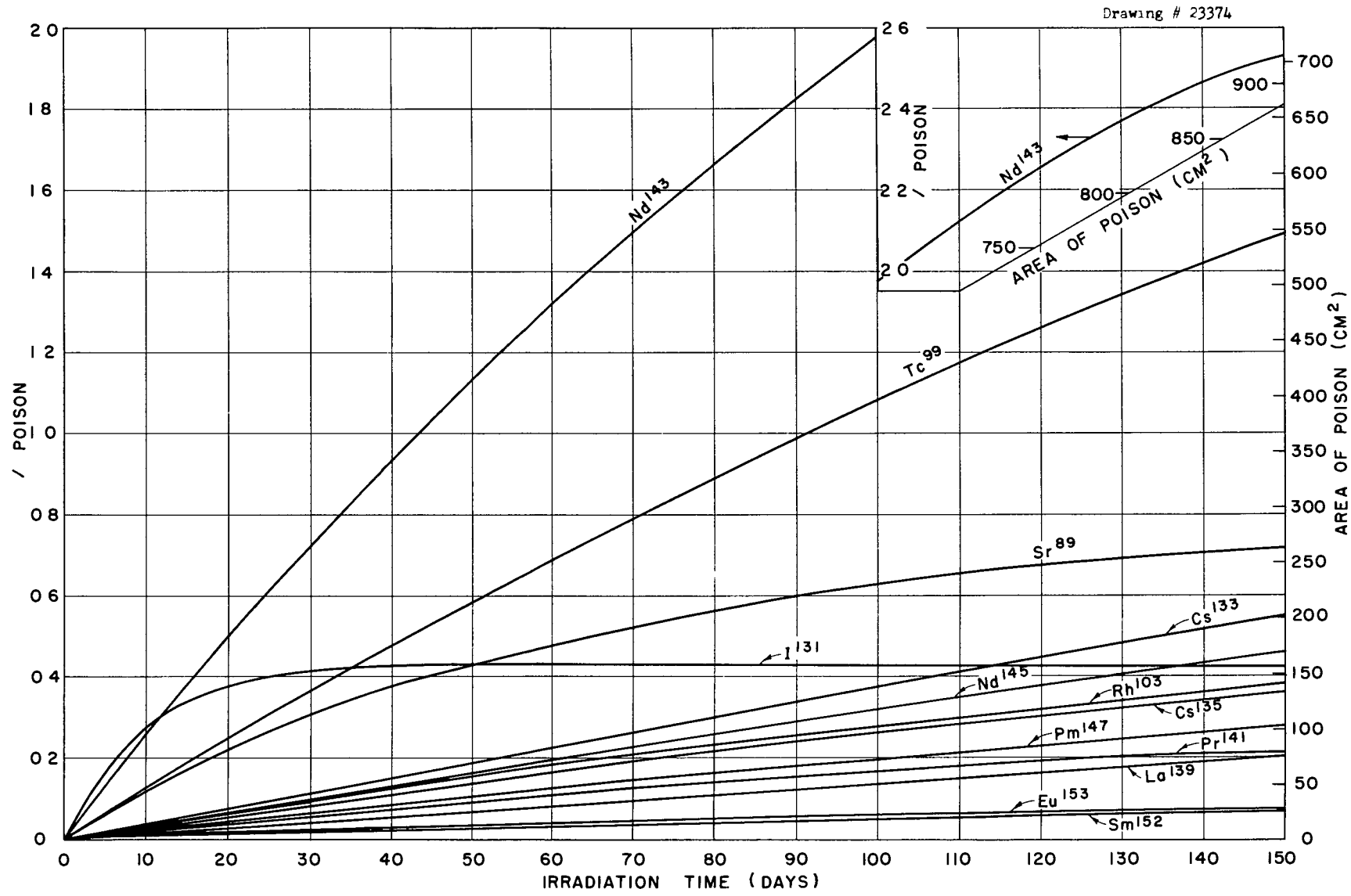

FIGURE 11

FISSION PRODUCT POISONS IN CORE OF TWO REGION THERMAL BREEDER

AVG FLUX 3.2×10^{14} Σ_f CORE SYSTEM 37 250 CM^2 CORE POWER 320 MW

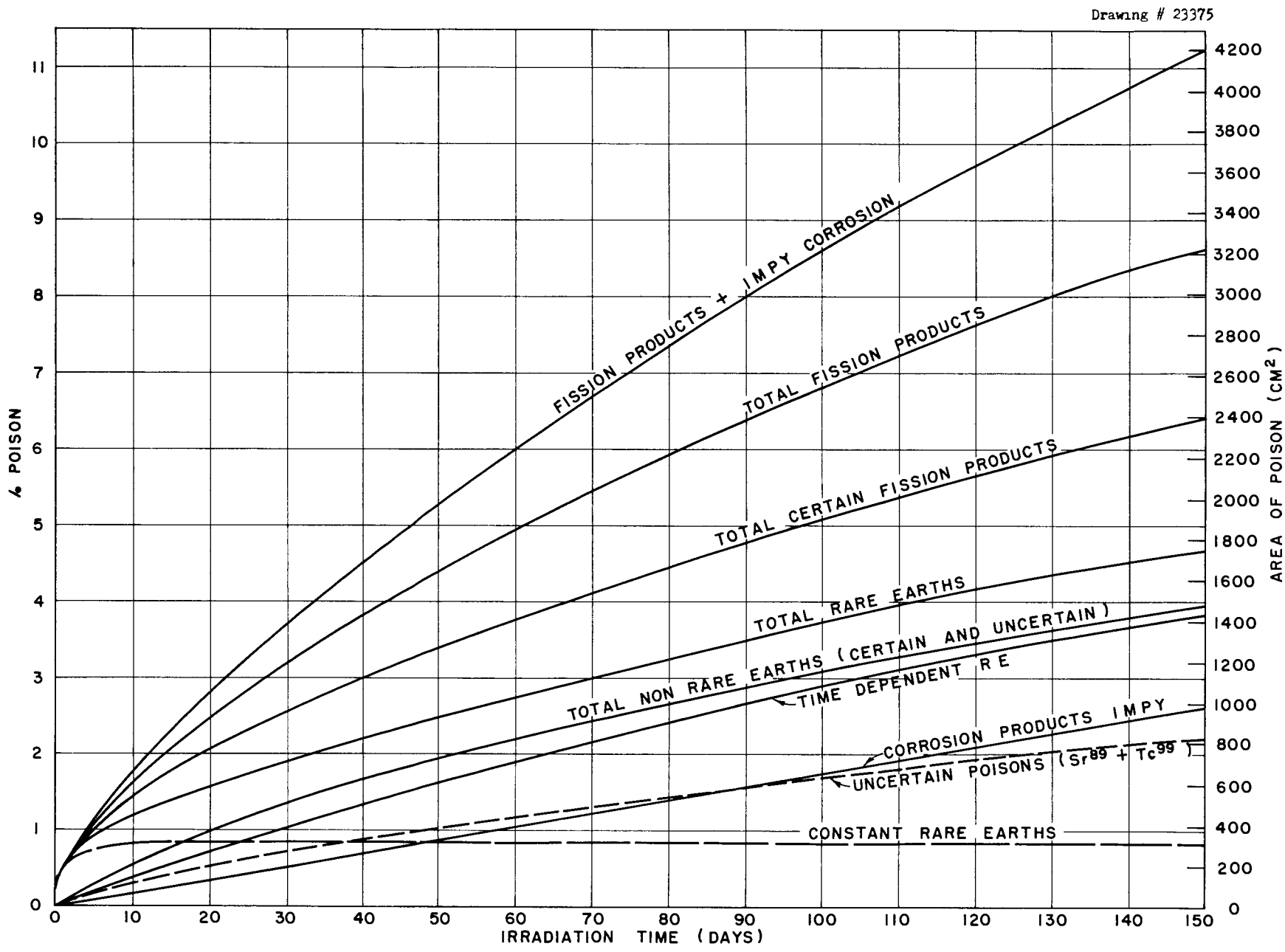

FIGURE 12 TOTAL POISON EFFECTS IN CORE OF TWO REGION THERMAL BREEDER
AVG FLUX 3.2×10^{14}, Σ_f CORE SYSTEM 37 250 CM^2, CORE POWER 320 MW

Drawing # 23377

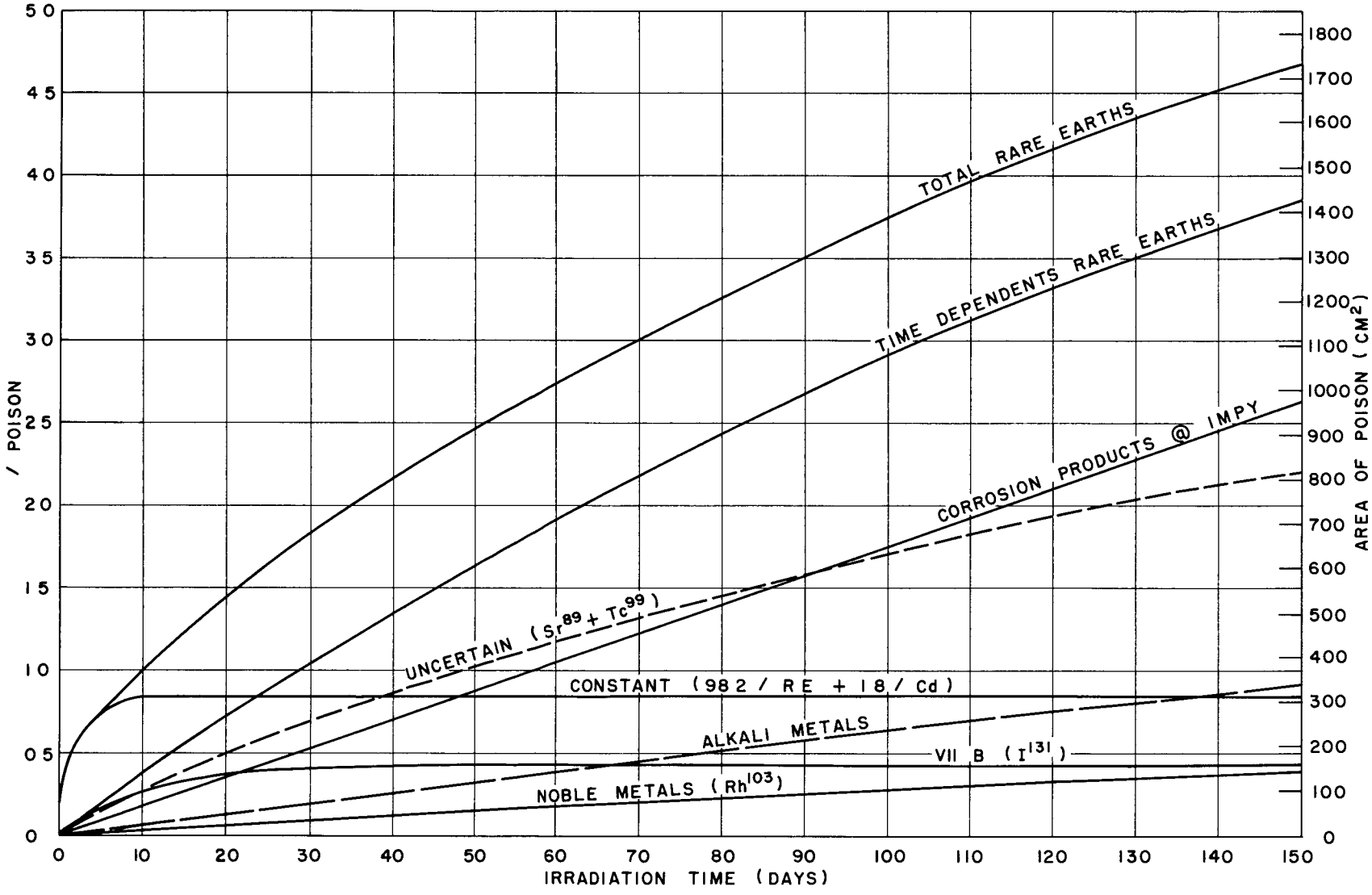

FIGURE 13

POISON EFFECTS AS A FUNCTION OF CHEMICAL GROUP IN CORE OF TWO REGION THERMAL BREEDER

AVG FLUX $3\ 2 \times 10^{14}$ Σ_f CORE SYSTEM 37 250 CM^2 CORE POWER 320 MW

APPENDIX III

Table 13

Equations Used in Calculating Inventories and Losses of Fissile and Fertile Materials

For U^{233} Inventory

$$I_1 = \frac{0.12v}{365e}\left[M_1\left(1 + \frac{t}{T_2}\right) + \frac{M_2}{1 + G}\left(1 + \frac{t^*}{T_3}\right)\right]$$

For Thorium Inventory

$$I_2 = \frac{0.12v_1M_3}{365e}\left(1 + \frac{t^*}{T_3}\right)$$

For U^{233} Losses

$$L_1 = 2.0 \times 10^{-3}v\left(\frac{M_1}{T_2} + \frac{M_2}{T_3}\right)$$

For Thorium Loss

$$L_2 = 1.0 \times 10^{-3}v_1\frac{M_3}{T_3}$$

Nomenclature

e = plant factor = 0.8

I_1 = U^{233} inventory charges, \$/day

I_2 = thorium inventory charges, \$/day

I_3 = D_2O inventory and loss, \$/day

L_1 = U^{233} loss charges, \$/day

L_2 = thorium loss charges, \$/day

M_1 = U^{233} in core, kg

M_2 = U^{233} + Pa^{233} in blanket, kg

M_3 = thorium in blanket, kg

T_2 = core processing period through Thorex, days

T_3 = blanket processing, days

t = core cooling period, days

t^* = blanket cooling period, days

G = breeding gain

v = value of U^{233} = \$20,000/kg

v_1 = value of thorium = \$11/kg

Table 13 Continued

For D_2O Inventory and Loss

$$I_3 = \frac{0\ 17 v_2}{365e}\left(S_1 + S_2\right)\rho$$

For Thorium Consumption, $/day

$$C_1 = 1\ 05 v_1 A\left\{P_b + P_c\left[1 + f(1 + \alpha)G\right]\right\}$$

Value of Excess U^{233}, $/day

$$V = vAP_c f(1 + \alpha)G$$

v_2 = value of D_2O = $88/kg

S_1 = core system volume, liters

S_2 = blanket system volume, liters

ρ = density of D_2O = 1 1 kg/liter

A = 1 1 x 10^{-3} kg fissioned per megawatt-day

C_1 = thorium consumption cost, $/day

P_b = blanket power, Mw

P_c = core power, Mw

f = fraction of core power generated by fissioning of U^{233}

α = ratio of capture to fission cross-section of U^{233} = 0 1

V = value of excess U^{233} produced, $/day