CENTRAL RESEARCH LIBRARY
DOCUMENT COLLECTION

MARTIN MARIETTA ENERGY SYSTEMS LIBRARIES
3 4456 0349688 4

ORNL 1784
Chemistry-Separation Processes
for Plutonium and Uranium

THOREX SOLVENT RECOVERY

DEVELOPMENT OF CALCIUM HYDROXIDE

SLURRY PROCESS

P. A. Haas
A. C. Jealous

CENTRAL RESEARCH LIBRARY
DOCUMENT COLLECTION
LIBRARY LOAN COPY
DO NOT TRANSFER TO ANOTHER PERSON
If you wish someone else to see this document, send in name with document and the library will arrange a loan.

OAK RIDGE NATIONAL LABORATORY
OPERATED BY
CARBIDE AND CARBON CHEMICALS COMPANY
A DIVISION OF UNION CARBIDE AND CARBON CORPORATION
UCC
POST OFFICE BOX P
OAK RIDGE, TENNESSEE

RESTRICTED DATA
This document contains Restricted Data as defined in the Atomic Energy Act of 1954. Its transmittal or the disclosure of its contents in any manner to an unauthorized person is prohibited.

[redacted]

[redacted]

ORNL-1784

This document consists of 30 pages.
Copy 5 of 145, Series A.

CHEMICAL TECHNOLOGY DIVISION

UNIT OPERATIONS SECTION

THOREX SOLVENT RECOVERY:

DEVELOPMENT OF CALCIUM HYDROXIDE SLURRY PROCESS

P. A. Haas
A. C. Jealous

DECLASSIFIED

Classification Changed To:
By Authority Of: TID-1148
By: R. Monsen 7/24/57

Date Issued: FEB 1 1955

OAK RIDGE NATIONAL LABORATORY
Operated by
CARBIDE AND CARBON CHEMICALS COMPANY
A Division of Union Carbide and Carbon Corporation
Post Office Box P
Oak Ridge, Tennessee

[redacted]

[redacted]

MARTIN MARIETTA ENERGY SYSTEMS LIBRARIES

3 4456 0349688 4

INTERNAL DISTRIBUTION

1. C. E. Center
2. Biology Library
3. Health Physics and Metallurgy Library
4-5. Central Research Library
6. Reactor Experimental Engineering Library
7-11. Laboratory Records Department
12. Laboratory Records, ORNL R.C.
13. C. E. Larson
14. L. B. Emlet (K-25)
15. J. P. Murray (Y-12)
16. A. M. Weinberg
17. E. H. Taylor
18. E. D. Shipley
19-20. F. L. Culler
21. F. C. Vondergge
22. W. H. Jordan
23. J. A. Swartout
24. C. P. Keim
25. J. H. Frye, Jr.
26. S. C. Lind
27. A. H. Snell
28. A. Hollaender
29. M. T. Kelley
30. K. Z. Morgan
31. T. A. Lincoln
32. R. S. Livingston
33. A. S. Householder
34. C. S. Harrill
35. C. E. Winters
36. D. W. Cardwell
37. E. M. King
38. W. K. Eister
39. F. R. Bruce
40. D. E. Ferguson
41. H. K. Jackson
42. H. E. Goeller
43. D. D. Cowen
44. R. A. Charpie
45. J. A. Lane
46. M. J. Skinner
47. R. E. Blanco
48. A. C. Jealous
49. J. E. Savolainen
50. P. A. Haas
51. W. R. Winsbro
52. E. M. Shank
53. E. Lieberman
54. B. F. Bottenfield
55-56. ORNL Document Reference Library, Y-12 Branch

EXTERNAL DISTRIBUTION

57. American Machine and Foundry Company
58-65. Argonne National Laboratory
66. Armed Forces Special Weapons Project (Sandia)
67. Armed Forces Special Weapons Project, Washington
68-70. Atomic Energy Commission, Washington
71. Babcock and Wilcox Company
72. Bettis Plant (WAPD)
73-75. Brookhaven National Laboratory
76. Bureau of Ships
77. Carbide and Carbon Chemicals Company (C-31 Plant)
78-80. Carbide and Carbon Chemicals Company (K-25 Plant)
81. Chicago Patent Group
82. Commonwealth Edison Company
83. Detroit Edison Company
84. Dow Chemical Company (Rocky Flats)

[redacted]

8[redacted]-88. duPont Company, Augusta
[redacted]89. duPont Company, Wilmington
[redacted] Duquesne Light Company
91[redacted] Foster Wheeler Corporation
92. [redacted]eneral Electric Company (APS)
93-100. G[redacted]eral Electric Company, Richland
101. Go[redacted]ear Atomic Corporation
102. Hanf[redacted]d Operations Office
103. Iowa [redacted]te College
104. Kaiser [redacted]gineers
105-107. Knolls At[redacted]ic Power Laboratory
108-109. Los Alamos [redacted]ientific Laboratory
110. Massachusett[redacted]nstitute of Technology (Benedict)
111. Monsanto Chemi[redacted]l Company
112. Mound Laboratory[redacted]
113. Naval Research Lab[redacted]atory
114. Newport News Shipbu[redacted]ing and Dry Dock Company
115-116. North American Aviati[redacted] Inc.
117. Pacific Northwest Power [redacted]roup
118. Patent Branch, Washington[redacted]
119. Pennsylvania Power and Lig[redacted] Company
120-123. Phillips Petroleum Company ([redacted]S)
124-125. University of California Radiat[redacted]n Laboratory, Berkeley
126-127. University of California Radiati[redacted] Laboratory, Livermore
128. Vitro Engineering Division
129. Westinghouse Electric Corporation ([redacted]G)
130-144. Technical Information Service, Oak Ridge
145. Division of Research and Medicine, AEC, ORO

[redacted]

[redacted]

CONTENTS

		Page
1.0	Abstract	1
2.0	Introduction	1
3.0	Equipment Evaluation	1
	3.1 Recommendations for Plant Applications of Calcium Hydroxide Solvent Treatment	2
	3.2 Mixer-Settler Contactor	2
	3.3 Solvent Clarification Equipment	4
4.0	Calcium Hydroxide Charge	5
	4.1 Charge Composition	5
	4.2 Charge Life	6
5.0	Removal of Solvent Degradation Products	7
6.0	Removal of Radioactive Impurities	7
	6.1 From Purex First Uranium Cycle Solvent	8
	6.2 From Thorex Solvent	9
7.0	Waste Volume and Disposal	9
8.0	References	10
9.0	Appendix	11
	9.1 Equipment System	11
	9.2 Basis for Mixer-Settler Contactor Design	13
	9.3 Procedures	16
	9.4 Product Solvent Quality Evaluation	17
	9.5 Tabulated Results	18

TABLES

9-1	Solvent Quality Ratings for an Empirical Shake Test	19
9-2	Summary of Solvent-Recovery Operations	20
9-3	Gross Beta and Gamma Decontamination of Purex Solvent from Calcium Hydroxide Slurry Treatment	22
9-4	Radiochemical Analyses of Use First Cycle Solvent from Purex Run HCP-20	23
9-5	Radiochemical Analyses of a Purex Solvent After Treatment With a Calcium Hydroxide Slurry	23

[redacted]

TABLES (continued)

		Page
9-6	Decontamination of Radioactive Solvent by Calcium Hydroxide Slurry Treatment	24
9-7	Removal of Thorium and Uranium by Calcium Hydroxide Slurry Treatment	24

FIGURES

3-1	Calcium Hydroxide Contactor	3
9-1	Solvent Recovery System With Mixer-Settler Calcium Hydroxide-Solvent Contactors	12

[redacted]

[redacted]

1.0 ABSTRACT

Calcium hydroxide slurries, approximately 360 g of calcium hydroxide per liter of water, effectively removed impurities from Thorex process solvent (42% tributyl phosphate in Amsco 123-15) which had been used in nonradioactive pulse column studies, so that it could be reused in extraction columns. Contact between solvent and slurry was made in mixer settlers. The volume of waste from this recovery process was 1% or less of the volume of solvent treated. An equipment diagram and a flowsheet are given.

2.0 INTRODUCTION

The objective of this investigation was to determine the feasibility and advantages of semicontinuous treatment of used Thorex solvent with calcium hydroxide prior to its reuse in the extraction process. In the nonradioactive pulse column studies when Thorex process solvent, 42% tributyl phosphate (TBP) with a hydrocarbon diluent, Amsco 123-15, was reused without purification, decomposition products of the TBP and other impurities in both the TBP and the diluent caused the formation of solid particles of insoluble material at the solvent-aqueous interfaces in the process contactors.(1,2) This solid-particle layer tended to hide the interface, cause flooding, concentrate radioactivity and carry it over in the product, and otherwise make column operation unsatisfactory. Laboratory-scale batch treatment of solvent with a calcium hydroxide slurry was effective in removing these impurities from the Thorex solvent,(3,4) and earlier purification systems for other TBP-hydrocarbon solvent mixtures used countercurrent extraction of the used solvent with sodium hydroxide or sodium carbonate solutions.(5,6) Such systems would not adequately remove the solid-impurity formers from Thorex solvent,(3,4) since the acid deficient Thorex flowsheet makes the solvent quality more critical than for some similar processes, such as Purex.

The studies reported here were made in a 6-in.-i.d. vertical mixer-settler contactor with a design processing capacity of 18 liters/hr; this was one-tenth the size which would be required for the 200-kg/day Thorex pilot plant. Studies were made to evaluate the equipment used and to establish an optimum flowsheet for the purification process.

The advice and assistance of J. Savolainen, who was responsible for the chemical development of the calcium hydroxide solvent treatment, and of W. R. Winsbro, who designed the contactors used, is recognized and appreciated.

3.0 EQUIPMENT EVALUATION

The experimental studies included evaluation of the equipment suggested for this process by the Process Design Section engineers (see Sec. 9.1). Comparisons with possible alternative systems were not attempted. Semicontinuous rather than batch operation was recommended because it permitted smaller equipment, smaller holdup volumes, and treatment of more solvent per unit weight of

[redacted]

calcium hydroxide, so that both waste volumes and solvent losses were smaller. Calcium hydroxide requirements were about 1 g or less per liter of solvent for the mixer-settler contactor system compared to about 20 g per liter for batch treatment.

3.1 Recommendations for Plant Applications of Calcium Hydroxide Solvent Treatment

If the calcium hydroxide slurry treatment of solvent is to be applied in a production plant, studies to select an optimum type of contactor would be justified. Possible alternate contactors which could have advantages include: (1) a pulse column which would give continuous operation, (2) separate mixer and settler units, which would give a wider range of throughputs without excessive carryover of calcium hydroxide slurry, and (3) a jet mixer loop or similar contactor which would use a pump to eliminate the use of an agitator. Alternates (2) and (3) with a centrifuge would give very flexible systems in respect to the holdup time, flow rate, and agitation variations possible.

Since the mixer-settler contactors require periodic shutdowns for recharging, feed and product holdup facilities would have to be provided for using them in a solvent recovery system for a continuous solvent extraction process. The time for recharging, the charge lifetime, and the solvent input rate to the extraction columns would determine the capacities required for holdup facilities and the solvent recovery system. An extra contactor and spare centrifuge could be included with a piping system to make the solvent recovery completely continuous, but the holdup tanks seem simpler and cheaper.

3.2 Mixer-Settler Contactor

The mixer-settler contactor as designed performed well with only minor alterations (see Sec. 9.1). The vessel (see Fig. 3-1), which was similar to a Rushton contactor for two liquids, combined mixing of the calcium hydroxide slurry with the solvent and settling out of the solids in one vessel to give a relatively solids-free solvent product. The used solvent entered the contactor at the bottom, passed through the agitated mixing region into the baffled settling section, over a sawtooth weir, and out at the top. The design called for an average contact time of 1 hr in a single contactor, a solvent velocity of 2.5 cm/min, agitation at 400 rpm, and a solvent processing capacity of 18 liters/hr.

The mixer-settler contactors could be scaled up by keeping the same height and solvent flow per unit area, with larger baffles, agitators, and body diameters. The use of a higher feed rate per unit area of cross section, with a longer column to maintain the 1-hr contact time, increased the carryover of entrained solids and should be avoided.

Rate of Operation. Satisfactory operation was possible for rates up to double the design rate of 18 liters/hr. The rate of operation of a calcium hydroxide slurry solvent recovery system is limited by either (1) the contact time required for the slurry to adequately remove impurities from the solvent, or (2) the solvent velocity which must be low enough to give tolerable entrainment of slurry particles out of the contacting volume and out of the settling region overflow.

ORNL-DWG-4751 [redacted]

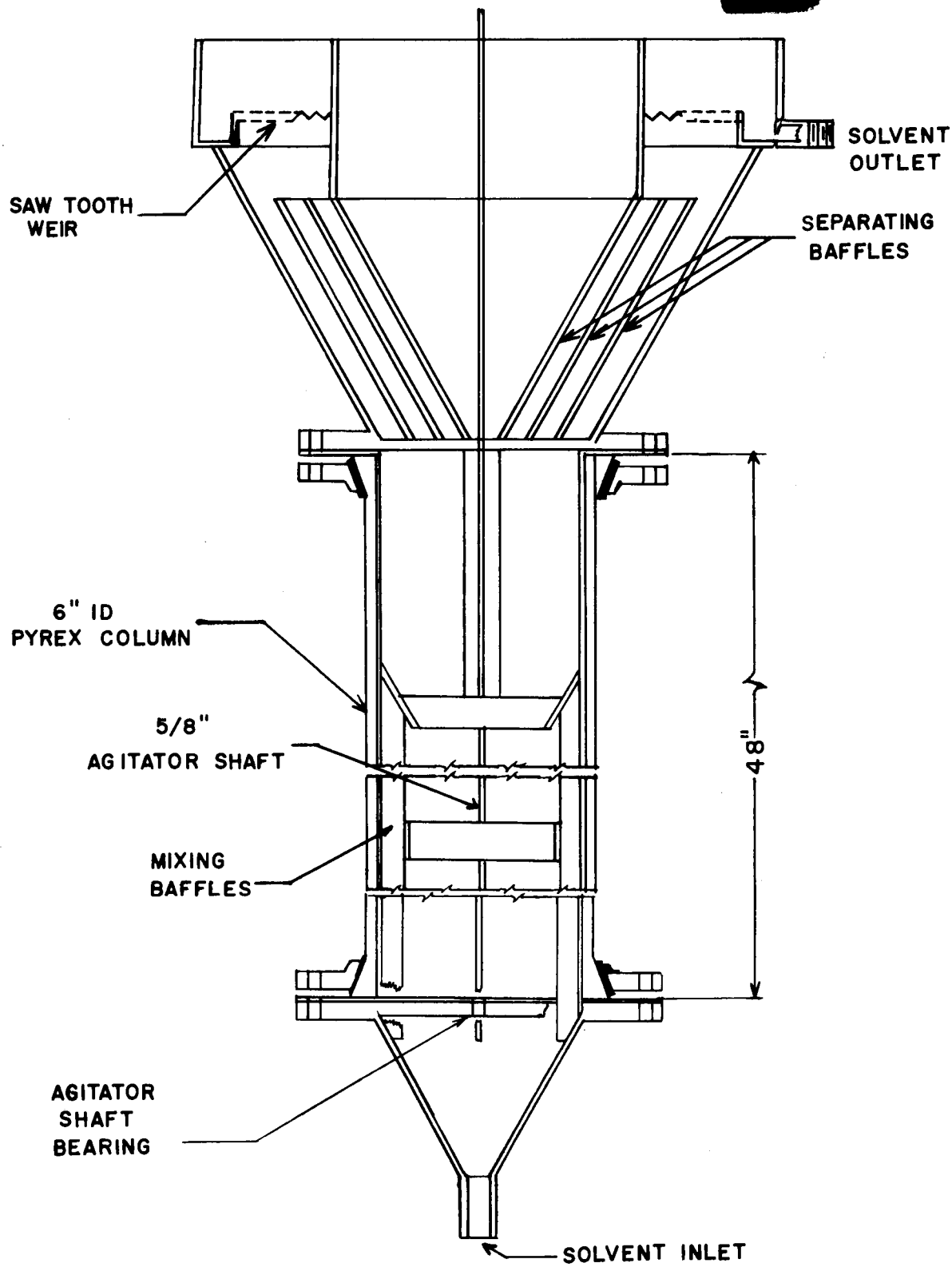

FIG. 3.1

CALCIUM HYDROXIDE CONTACTOR

The minimum contact time to adequately remove solvent impurities was 1 hr in a single c[redacted]. Two contactors were used in series (instead of one contactor with double the residence time), with a ½-hr residence in each, to give a two-stage removal of solvent impurities and thus greatly increase the charge life. The two stages also decreased the probability of channeling or short-circuiting of solvent. The design settling velocity of slurry particles was 2.5 cm/min. Operation for velocities up to 5 cm/min was practical; higher rates caused excessive carryover of solids in the contactor products.

Most of the operation of the solvent recovery system was for rates near the design rate of 18 liters/hr. This design rate, which is 50% of the maximum rate as limited by either contact time or solvent velocity, appears to be a practical value for normal operation. The mixer-settler contactors required 5 in. or less of solvent gravity head to maintain operating flow rates (see Sec. 9.3).

Agitator Speed. Operation with five agitator impellers at 400 rpm gave excellent mixing with no evidence of channeling. The agitation requirements would be different for a different contactor geometry. Agitator speeds of 200 rpm or less gave visibly poor turbulence and contacting. Speeds of 480 rpm or more seemed to increase the carryover of solids in the form of fine particles dispersed in the solvent. There was no apparent increase in contactor efficiency at speeds above 400 rpm, although tests specifically intended for checking this point were not made. The use of a number of impellers on a single vertical shaft in a long contactor was better than a single impeller in a larger diameter contactor because (1) there is less chance of channeling through a series of mixing zones, (2) the higher upward velocities aid in keeping the calcium hydroxide slurry in suspension and give better mixing, and (3) less power is required since power requirements depend on the fifth power of the agitator diameter.

3.3 Solvent Clarification Equipment

The solvent leaving the second contactor normally contained about 0.02 wt % solids, which resulted in formation of interfacial solids in the extraction column if the solvent was reused without further clarification. If radioactive solvent had been processed, the entrained solids would probably have contained a major part of the product solvent radioactivity. A centrifuge was more effective than a filter for dependably removing these solid particles.

Centrifuge. The Sharples supercentrifuge used as a continuous clarifier gave a solvent product free of visible suspended material for flow rates up to 40 liters/hr. Above this rate, the maximum capacity of the centrifuge bowl to discharge solvent was reached before the breakthrough of solids became serious. The Sharples supercentrifuge was used because of availability; a slower-speed and larger-diameter type of centrifuge would probably give adequate clarification and would be more practical for pilot plant or plant use.

Filter. A sintered stainless steel Starr filter operated well for all the Thorex solvent processed. The head required for operation of the filter was found to be a linear function of the flow rate and varied from 2.4 to 4.3 ft of solvent to pass 22 liters/hr. It was not a simple function of filter cake buildup or time. During operation with Purex solvent (see Table 9-2, charge 15),

which was 30% tributyl phosphate in Amsco (hydrocarbon) diluent, the filter would not permit reasonable flow rates. These results indicated that a centrifuge is to be preferred for solvent clarification.

Wash Column. Bubbling the second contactor product solvent through 18 in. of water in the water wash column did not adequately remove the entrained solids. A dilute nitric acid wash (approximately 0.1 M) dissolved the solids and allowed undesirable components to redissolve in the solvent.

4.0 CALCIUM HYDROXIDE CHARGE

In laboratory studies[2,3] a slurry of finely divided, solid calcium hydroxide was found to be effective for purifying Thorex solvent. Aqueous solutions of calcium hydroxide were not effective, probably because of the low solubility of this hydroxide in water. Finely divided calcium hydroxide low in calcium carbonate was desirable, and Baker and Adamson reagent grade calcium hydroxide powder was found satisfactory. Use of old calcium hydroxide that was partially converted to calcium carbonate resulted in entrainment of solids in the contactor overflow and poor product solvent quality.

4.1 Charge Composition

Liquid-liquid contact of an aqueous slurry of calcium hydroxide with the solvent was found to be the most efficient method of using calcium hydroxide for Thorex process solvent purification and recovery. The optimum slurry composition was 330 to 400 g of calcium hydroxide per liter of water with about 30% of the contacting volume occupied by the aqueous phase. The aqueous slurry was dispersed by agitation into the continuous solvent phase.

The initial procedure, suggested from laboratory studies, was to disperse dry calcium hydroxide in solvent. Contacting, with agitation, of 60 g of calcium hydroxide per liter of solvent for 1 hr removed many of the undesirable solvent impurities. Operation of the mixer-settler contactors with the 60 g of dry calcium hydroxide per liter of solvent permitted carryover of excessive amounts of calcium hydroxide as small particles in the solvent leaving the contactor. It was observed that addition of water to the contactor during operation caused an increase in the calcium hydroxide particle size and gradually reduced the carryover of solids. The need for adding water was at first thought to be due to the inadequacy of the wetting column for water-saturating the fresh solvent which was being treated, but for used solvent, which should be water-saturated, similar results were obtained. When 600 ml of water was slowly added to a new slurry charge in the contactor before use, the carryover of fines was delayed, but not prevented. One liter of water added to a new slurry charge in a contactor coalesced the calcium hydroxide slurry into pellets (up to 1/8 in. diam.), which were useless for solvent treatment. Neither continuous nor intermittent addition of water during operation was satisfactory for continuous operation of the solvent recovery system, since the difference between too much and too little water was small.

When sufficient water was added to the slurry rapidly, the slurry of calcium hydroxide in solvent was converted to an aqueous-phase slurry. Liquid-liquid

contacting of this aqueous phase with solvent was found to effectively remove solvent impurities. The charge make-up procedure was changed to slurrying calcium hydroxide in water and putting this aqueous slurry into the contactors. From 330 to 400 g of calcium hydroxide per liter of water was found to be an optimum aqueous phase composition. Less calcium hydroxide permitted the formation of large volumes of emulsions which tended to completely fill the contactors, while more calcium hydroxide gave a thicker slurry which did not mix well with the solvent. The organic phase must be continuous to prevent emulsion formation, and this limited the fraction of the contacting volume to be occupied by the aqueous phase. As much of the aqueous slurry was used as was practical to increase the amount of calcium hydroxide charged and thus the charge life. The optimum compromise of these conflicting demands was to have the aqueous slurry equal to about 30% of the contacting volume.

4.2 Charge Life

The life of a contactor charge of calcium hydroxide is determined by the first to be reached of three possible limits; these are:

(1) Neutralization of the calcium hydroxide by the nitric acid in the solvent. A calcium nitrate solution is not effective for solvent purification.

(2) Decreased effectiveness of the calcium hydroxide for removing nonradioactive solvent impurities until the product solvent is not satisfactory for column operation.

(3) Decreased decontamination factors for radioactive materials until the radioactivity of the product solvent exceeds the specified maximum allowable.

Thorex column operation produced used solvent that is 0.004 N acid. One kilogram of calcium hydroxide would neutralize 7000 liters of this 0.004 N acid. Limiting neutralization to 50% of the first contactor charge seems desirable. For 0.004 N acid, this limit would result in recovery of 1700 liters of solvent for each kilogram of calcium hydroxide used. This would be a 330-hr or 2-week charge life at the design operating rate of one contactor volume per hour.

The longest period of operation for a single charging of the contactors produced 1200 liters of product solvent, equivalent to 66 hr at 18 liters/hr. The first contactor was still removing most of the solids-forming impurities, although a slight decrease in its effectiveness was noticeable after 810 liters (45 hr at 18 liters/hr) had been processed. Since the first contactor continued to remove most of the undesirable impurities, it is believed that the two contactors in series should have a lifetime of at least several times 45 hr and would probably have the 330-hr life determined by neutralization if the radioactivity removal does not demand a shorter charge life. The lifetime of a calcium hydroxide charge for effective decontamination of a radioactive solvent was much shorter (probably approximately one-tenth as long; see Sec. 6.0) than the lifetime for effective removal of solids-forming solvent impurities. Therefore, if decontamination is important, the replacement of calcium hydroxide charges more frequently than necessary for removal of nonradioactive solvent impurities may be desirable.

5.0 REMOVAL OF SOLVENT DEGRADATION PRODUCTS

The aqueous calcium hydroxide slurry treatment, under the conditions described, consistently reduced the concentration of solvent degradation products to such a level that the solvent could be reused in the Thorex process extraction columns. Extraction column operation would have been very difficult or impossible with the untreated solvent.

A maximum concentration of 50 ppm of mono- and dibutyl phosphates was tolerable in the solvent used in the Thorex process, but no satisfactory method of measuring such low concentrations of tributyl phosphate decomposition products was known. Other undesirable organic impurities were present in such low concentrations that isolation and identification of them was not feasible. By means of an empirical solvent quality test that was developed (see Sec. 9.4), solvent product samples were shown to be usually "good" or "excellent." Some "fair" or "poor" quality products resulted when the nonoptimum operating conditions were being investigated (see Table 9-2). By the same tests, the solvent feed to the recovery system usually was rated "poor" or "very poor," with some rated "fair". Product solvent tests were usually made once every hour or oftener; feed solvent tests were made once every few hours.

In Thorex plant operation, pretreated Amsco 125-90W will be used as the diluent. It contains less aromatics and other hydrocarbons that decompose to solids formers than does Amsco 123-15, the diluent for most of the solvents treated in the evaluation tests of the calcium hydroxide slurry process equipment. The Thorex plant operation will involve repeated reuse of the solvent, which will be re-treated with calcium hydroxide slurry every time it passes through the extraction column. Because of these factors, the calcium hydroxide slurry treatment should be more, instead of less, effective for Thorex plant conditions than for the experimental studies reported.

The solvent would not be expected to remain free of solids formers throughout the whole solvent cycle. The nitric acid in the extraction columns will cause decomposition of TBP to DBP and MBP and will oxidize or nitrate components of the diluent. This is why re-treatment of the solvent as part of the solvent cycle is considered necessary. Use of a good quality pretreated diluent (such as Amsco 125-90W) and use of a calcium hydroxide solvent treatment system could be expected to minimize troubles from solids formation in Thorex Plant extraction columns.

6.0 REMOVAL OF RADIOACTIVE IMPURITIES

The calcium hydroxide slurry treatment removed radioactive materials from TBP-hydrocarbon solvent. Decontamination of Thorex plant solvent would probably be better than the factors of 3 to 160 obtained for the solvents treated because:

(1) In the solvents treated Amsco 123-15 was the hydrocarbon diluent, while the Amsco 125-90W which will be used for Thorex plant operations contains less aromatics and other components which decompose into solids-forming materials.

(2) The diluents were not pretreated, while in Thorex plant operations pretreated diluents will be used.[2]

(3) Repeated cycles through extraction columns and the time the solvent studied stood in drums increased the probability of irreversible tie-ups of radioactive materials with solvent degradation products.

(4) The solvent radioactivity spectrum would be much different in a radioactive Thorex plant where solvent would be processed soon after leaving the C column.

After the tests were made, the Chemical Development Section showed that diluent pretreatment is necessary to remove aromatics and to remove constituents which are unstable to oxidizing and nitrating conditions. The resulting oxidation and nitration products, which will irreversibly tie up radioactive ions, can be removed before the diluent is mixed with TBP, but are difficult to remove from a TBP-diluent mixture.[2]

6.1 <u>From Purex First Uranium Cycle Solvent</u>

A solvent recovery test using Purex Pilot Plant first uranium cycle waste solvent (30% TBP, 70% Amsco 123-15) was carried out. Beta decontamination factors of about 15 were obtained after 22 liters of product had been processed, 6 after 200 liters, and 3 after 400 liters. The gamma decontamination was about 3 throughout the run (see Table 9-3). Operation was at 18 liters of solvent flow per hour and with a 400-rpm agitator speed. This solvent, which contained unpretreated Amsco 123-15, had been recycled through the Purex Pilot Plant a number of times and held in drums for 2 to 6 weeks before being treated with calcium hydroxide. Samples of feed, first contactor product, and final product were taken at approximately hourly intervals, and selected samples were analyzed for beta and gamma activity. The addition of mercuric nitrate to the slurry charge at about 240 liters (between periods of operation) had no significant effect on decontamination. It was expected to aid in removing any free iodine present.

There is evidence that some of the activity is concentrated in small liquid or solid particles in the solvent. These particles, which may be peptized by diluent degradation products, may result in nonhomogeneous activity distributions in solvent which has not been disturbed for a few days or weeks. These factors and operating discontinuities can explain the variations in results of activity analyses. The system was operated and sampled for a period of about 11 hr, starting on Jan. 23, 1953. The test was suspended for 4 weeks in order to permit further laboratory studies on decontamination aids. The system was run another 11 hr, starting Feb. 24, 1953. Overnight shutdowns and changes from one feed drum to another occurred in both the 11-hr periods.

Decontamination factors as high as 1000 had been obtained in laboratory-scale studies on solvent treated batchwise with calcium hydroxide slurries immediately after it had left the Purex C column.[4] For the investigation described in this report, the solvent feed was held 2 to 6 weeks before being processed. It is possible that immediate treatment would give better decontamination factors because: (1) during the standing period the ruthenium and zirconium may exchange with or combine chemically with complex degradation products of the diluent before the calcium hydroxide treatment has a chance to decontaminate

the solvent,* or (2) the calcium hydroxide might be more effective in removing some of the short-half-life activities, such as iodine, than it is in removing the long-half-life materials.

Beta activity analyses for the Purex Pilot Plant ICW stream corrected to Jan. 8, 1953, and for the product solvent are tabulated in Tables 9-4 and 9-5. In the product solvent, 85% of the beta activity is due to ruthenium and 12% to zirconium.

A sample of the contents of the first contactor after the run was completed was dissolved in nitric acid and found to have a beta activity of about 7×10^4 c/min per gram of calcium hydroxide. The wet centrifuge cake had a beta activity of 2×10^5 c/min per gram and its weight was about 0.03% of the weight of the solvent centrifuged. By using average activities for the feed and product streams, it was possible to calculate an activity material balance which checked within 20%; this is good agreement, considering the approximations involved.

6.2 From Thorex Solvent

Used Thorex process solvent (ICW) that was radioactive when returned after being processed in the Purex Pilot Plant solvent recovery system (sodium carbonate wash and centrifugation) was treated in the calcium hydroxide slurry treatment system. The radioactivity was reduced by factors of 20 to 160 (see Table 9-6). The material causing the radioactivity was not identified.

The calcium hydroxide slurry tends to remove any thorium or uranium which is not stripped out in the pulse columns (see Table 9-7). Normal operation would reduce thorium to below 10 mg/liter and uranium to below 0.3 mg/liter. Operation which resulted in high losses to the ICW stream could require recovery of thorium or uranium from the solvent recovery system waste.

7.0 WASTE VOLUME AND DISPOSAL

When the calcium hydroxide slurry will no longer decontaminate solvent, it can be dissolved in place in the contactor to give an aqueous waste whose volume is much smaller than that from a sodium carbonate recovery system. The acid dissolution in situ (see Sec. 9.3) eliminates the use of filters or the transfer of the calcium hydroxide slurry through valves or lines.

The solvent-recovery system would be started up and operated until 1700 liters of solvent per kilogram of calcium hydroxide in the recovery system (or whatever volume per charge had been selected) had been processed. Then agitation would be stopped, the solvent decanted by vacuum from above the aqueous slurry, the slurry dissolved in nitric acid, and the acidified waste discharged to a radioactive waste system. The organic material remaining with the acidified aqueous solution could be separated by a phase separator, but the concentration of solid-impurity formers in the solvent would be very high, and it would not be returned to the used solvent for contactor feed.

---

*A similar effect is demonstrated when part of the thorium becomes unstrippable if the organic thorium stream (product of the extraction-scrub column) of the Thorex process is not immediately stripped.

The waste per contactor charge of calcium hydroxide would include about 10 liters of acidified aqueous waste, about 4 liters of organic material containing large amounts of solvent degradation products, and the solids removed by the centrifuge, probably in the form of an acid solution into which the centrifuge cake was dissolved. All these wastes would contain concentrated solvent degradation products and radioactive fission products. The total waste volume would be about 30 liters for each two contactor charges. From the expected charge life (see Sec. 4-2), the waste volume would be less than 1% of the volume of solvent treated. Thus the calcium hydroxide slurry solvent recovery process could give 1/5 to 1/20 of the waste volume of the Thorex sodium carbonate process. This would be an important saving in the overall process waste volume.

8.0 REFERENCES

(1) A. T. Gresky, M. R. Bennett, S. S. Brandt, W. T. McDuffee, J. E. Savolainen, "Progress Report: Laboratory Development of the Thorex Process," ORNL-1367, pp. 30, 31, 38, 39, 42 (Dec. 17, 1952).

(2) A. T. Gresky, M. R. Bennett, S. S. Brandt, W. T. McDuffee, B. G. Ryle, J. E. Savolainen, R. P. Wischow, "Laboratory Development of the Thorex Process: Progress Report - October 1, 1952 to January 31, 1953," ORNL-1518, pp. 40-47 (July 14, 1953).

(3) A. T. Gresky, M. R. Bennett, S. S. Brandt, K. L. Mattern, W. T. McDuffee, J. E. Savolainen, R. P. Wischow, "Laboratory Development of the Thorex Process: Progress Report, September 30, 1952," ORNL-1431, pp. 53-55 (March 16, 1953).

(4) A. T. Gresky, M. R. Bennett, S. S. Brandt, W. T. McDuffee, B. G. Ryle, J. E. Savolainen, R. P. Wischow, "Laboratory Development of the Thorex Process: Progress Report - February 1, 1953 to July 31, 1953," ORNL-1610, pp. 66-67 (April 9, 1954).

(5) C. V. Ellison, "Continuous Solvent Recovery Process Using Pulse Contacting Columns," ORNL-1224 (March 14, 1952).

(6) J. M. Chandler, D. O. Darby, "Terminal Report for the ORNL Pilot Plant Investigations of the Purex Process," ORNL-1519, pp. 91-104 (Feb. 8, 1954).

9.0 APPENDIX

9.1 Equipment System

The solvent recovery and purification system consisted of two contactors in series for intimately mixing solvent with a calcium hydroxide slurry, and accessory equipment (see Fig. 9-1). This was one of two types of solvent recovery systems proposed for the Thorex Pilot Plant. Pressure drops were small and the system was designed to operate with gravity flows throughout. The two-contactor system was installed in Cell A, Bank A, Building 3505. A similar system with only one contactor was used for preliminary studies.

Vertical Mixer-Settler Contactor. This contactor was devised by Process Design Section personnel (see Sec. 9.2) to combine mixing of the calcium hydroxide slurry and settling out to give a relatively solids-free solvent product in one vessel. The vessel was similar to a Rushton contactor for two liquids, although countercurrent flow to give more than one stage per contactor was not used for this solvent treatment. The similarity permitted the use of Rushton contactor design experience with respect to optimum baffle and agitator design.

The body of the mixer-settler calcium hydroxide-solvent contactor used (see Fig. 3-1) was a 48-in. length of 6-in.-i.d. pyrex pipe. Glass was used to permit easy observation of the operations, but stainless steel would probably be used for an operating plant. The solvent feed entered the tip of a stainless steel cone which closed the bottom of the contactor. The solvent flowed up through the contactor into an enlarged conical section of stainless steel where suspended solids were allowed to settle out. The solvent then discharged over a sawtooth weir and out of the contactor.

Baffle and impeller dimensions were selected from recommended Rushton contactor design. The impeller diameter was 2.5 in., or about 40% of the contactor diameter. The longitudinal baffle width was 5/8 in., or about 10% of the contactor diameter. The agitation was by five turbine type impellers located, respectively, 1, 9, 17, 26, and 35 in. above the bottom agitator shaft bearing.

The shaft of the agitator was a 5/8-in.-diam. stainless steel rod. In preliminary tests made with four impellers on a 3/8-in.-diam. shaft, as called for in the original design, insufficient mixing was obtained and an additional bearing support was required for the slender shaft. Since the 5/8-in.-diam. shaft operated satisfactorily, larger diameter rods were not tested. Observation of the 5/8-in.-diam. shaft indicated that a 1/2-in.-diam. shaft would have permitted excessive whipping.

The information and assumptions from which the mixer-settler contactors were designed was discussed in a memo which is abstracted as Sec. 9.2 of this report.

Centrifuge. The centrifuge, used because of availability, was a 21,000-rpm electrically driven laboratory model Sharples supercentrifuge with a bowl 1-3/4 in. diameter and 8 in. long. This unit developed 13,000 g at design speed. The bowl permitted operation with a range of heavy-phase takeoff rates; this

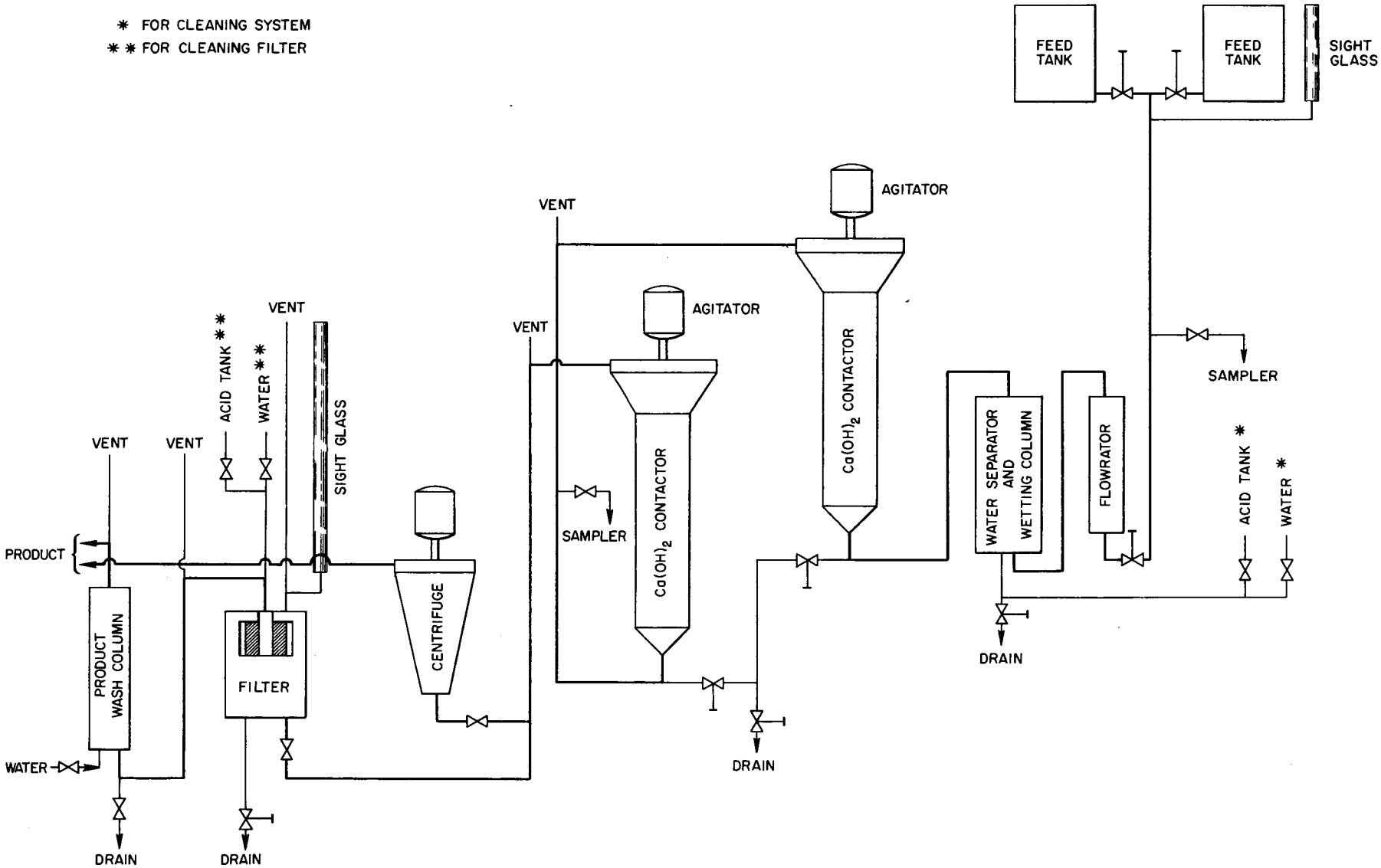

Fig. 9-1. Solvent Recovery System with Mixer-Settler $Ca(OH)_2$-Solvent Contactors.

rate was set at zero to give a continuous clarifier action with buildup of solids in the bowl. The weight of solids was determined by weighing the bowl containing cake drained free of liquids and subtracting the weight of the clean, cake-free bowl. The cake was removed by dissolving it in nitric acid. This left an oily organic residue which was removed with a brush.

Filter. The filter, which was sometimes used along with the water wash column in place of the centrifuge, was a sintered stainless steel Starr filter, 5-5/8 in. diameter, 6 in. long, and of an unknown porosity. The filtration area was about 1.3 ft^2.

Water Separation and Wetting Column. A 36-in.-long, 3-in.-i.d. pyrex pipe was used as a wetting column and water separator, i.e., to saturate the new solvent with water and to prevent excess water from entering the contactors. A conventional type of phase separator would probably be used for plant operations.

Wash Column. A 36-in.-long, 2-in.-i.d. pyrex pipe was used as a wash column for solvent leaving the filter. This column furnished a visible check on the filter performance.

Feed System. Feed flow was maintained by a gravity head, controlled by a needle valve, and measured by a flowrator. Two 55-gal stainless steel drums equipped with a level-gage glass supplied feed storage capacity. These drums were located in the top cell level and were filled through external connections from drums on top of the cell. The calibrated flowrator measured feed rates of 0 to 72 liters/hr.

9.2 Basis for Mixer-Settler Contactor Design*

In the Thorex solvent recovery system, a calcium hydroxide slurry will be contacted in a semicontinuous batchwise manner with the used solvent.

Slurry Preparation. A calcium hydroxide suspension containing 60 g of calcium hydroxide per liter is prepared from fresh water-saturated solvent and charged to a vertical contactor vessel. Stripped solvent requiring refinement is then fed up through this contactor at a velocity below the interface settling velocity for the suspension. It might appear that this velocity would be quite low, since the ASTM specifications for hydrated lime call for a particle size such that 85 wt % will pass through a 200-mesh screen (mesh opening of 74 μ). Fortunately, however, these small particles agglomerate when contacted with water-saturated solvent, so that an interface settling velocity of the order of 3 cm/min is obtained with a newly prepared suspension. Therefore a solvent velocity of the order of 2.5 cm/min is expected to be safe for design purposes. Although the solvent fed to the contactor will be saturated with water, indications are that the calcium hydroxide particles will pick up very little additional water during operation. However, any additional water picked up, plus the added agglomeration produced by solids pickup, should ensure progressively safer performance with a velocity of 2.5 cm/min.

---

* This section was abstracted from "$Ca(OH)_2$ Contactors for Thorex Solvent Recovery System," ORNL CF-52-10-26, by W. R. Winsbro (Oct. 3, 1952). This memo discusses the information and assumptions from which the contactors were designed and does not represent the final operating theory.

As the solvent moves upward through the contactor, a number of different adsorption processes take place: (1) solids-forming impurities are removed; (2) any residual radioactive contamination leaking past an upstream silica gel column in the system is removed; (3) the nitric acid content of the solvent is neutralized; and (4) there may be some dehydration of the solvent. Currently available information indicates that the process of neutralization will limit the duration of the operating cycle for the contactor (the solvent will be about 0.002 N in nitric acid). Tentative plans call for arbitrarily terminating the contactor operating cycle when 50% of the calcium hydroxide charged has been neutralized.

Contact Time. Preliminary laboratory data indicate that a solvent-slurry contact time of 1 hr is ample for the above-mentioned processes to take place. To obtain an average residence time of 1 hr in a single contactor, a contactor suspension volume equal to the hourly volumetric processing rate of the solvent is required. However, such a design only ensures that the average residence time will be 1 hr, and there is a good probability that some solvent will pass through the contactor with a residence time considerably below average. This probability is combatted more effectively by using two contactors (each with a contact time of 1 hr), in series than by using a single contactor with a 2-hr contact time.

Length of Operating Cycle. The duration of the operating cycle for this dual contactor unit will be limited to that required to neutralize half the calcium hydroxide in the first contactor and is readily calculated to be 17 days, from the relation

$$\text{Cycle operating time} = \frac{(V)(60\ \text{g Ca(OH)}_2/\text{liter})(0.50)}{(37\ \text{g Ca(OH)}_2/\text{equiv})(F)(0.002\ \text{equiv/liter})(24\ \text{hr/day})}$$

where V is the contactor volume in liters and F is the solvent feed rate, in liters per hour, which for a contact time of θ hr equals V/θ.

$$\frac{60 \times 0.5V}{37 \times 0.002 \times 24F} = \frac{30 \times 500V}{37 \times 24F} = 17V/F = \frac{17V}{V/\theta} = 17 \text{ days}$$

Waste Disposal. After 17 days of cumulative operation, both contactor units will be shut down and charged with fresh calcium hydroxide suspension. The spent suspension will be drained from the contactors to filtration units where the solvent will be recovered from the solids. The calcium hydroxide filter cake will be disposed of by dissolving with 8 M nitric acid and then flushing to a drain for radioactive materials. Laboratory studies have indicated that the radioactive waste volume discharged from the calcium hydroxide system will be 1600 times smaller than that from the caustic—soda ash extraction system,[2,3] an obvious advantage of the calcium hydroxide contactor system.

Other Solvent Recovery Equipment. Three other items of equipment will be included in the main flow stream of the Thorex solvent recovery system:

1. Upstream from the contactor will be located a silica gel column to remove the bulk of the radioactive contamination from the solvent, thus reducing the operating activity level of the contactors.

2. Downstream from the contactors will be located a Micrometallic stainless steel filter (porosity H, 5 μ) to remove suspended solids from the refined solvent.

3. Beyond the filter there will be located a simple two-phase contactor column where the solvent will be contacted with water. This water saturator will furnish a visible check on the extent of the elimination of the solid impurity and will restore the water content of the solvent, which is essential to the performance of the electromagnetic flowmeters that will be used to control process flow.

Features to Improve Contact. At some point near the top of the contactor, a solid-liquid interface exists where the finer particles of calcium hydroxide drop out of the rising solvent. Such a unit would be subject to solvent channeling or short-circuiting. Channeling effects can be readily overcome by positioning a low-speed shaft mounted with several impellers in the suspension zone of the cell. Turbine type impellers with a diameter from 35 to 40% of the contactor diameter will be used. The height-to-diameter ratio of the contactor will be large, and it will be necessary to locate the agitator shaft coaxially with the contactor. For such a geometry, several longitudinal baffles must be spaced about the inner wall of the contactor to obtain agitation free of swirl. Four such baffles, having a width of 7 to 8% of the tank diameter, will be used.

Features to Improve Separation. By including agitator equipment in the contactor to solve the problem of solvent channeling, a problem of establishing solid-liquid separation at the top of the contactor is created. For this reason it is desirable to avoid the use of excessive agitation in the contacting zone. The operating speed of the agitator thus becomes a variable having an optimum value. It is expected that a speed between 200 and 400 rpm will prove adequate. To promote good solid-liquid separation at the top of the contactor, despite turbulence in the contacting section proper, the following items have been provided:

1. A conical annular baffle at the top of the contacting zone, just beyond the upper extremity of the longitudinal baffles. The periphery of this baffle fits tightly against the contactor wall and will eliminate the upward velocity which the top impeller imparts to the suspension in the region above the impeller and near the contactor wall. The width of this ring is important, since a wide ring would reduce solvent throughput rate materially (owing to the limiting design velocity of 2.5 cm/min), but a narrow ring would not completely eliminate excessive vertical velocity components above the plane of the baffle.

2. Radial baffles, to eliminate all residual swirl carrying over above the annular baffle. These baffles will be welded to the external circumference of a short section of pipe located about the agitator shaft, and will extend all the way to the contactor wall. Solvent leaving this section should be essentially free of all excessive vertical and horizontal velocity components relative to the main flow velocity.

3. A conical section of enlarged cross section at the top. A slope of 60° from the horizontal is the minimum that can be used in this section and yet obtain good solid drainage back into the contactor. A cross-sectional

enlargement ratio of 3 was arbitrarily selected for this section. A number of 60° conical partitions located within the enlarging section further improve the efficiency of clarification. These extend throughout the entire height of the section and are so spaced that the total cross section for flow is broken down into a number of annular passages of approximately 1.0 in. width. Solvent passing through the section is thus forced to pass through a number of narrow annular channels which diverge at a 60° angle. Within such a passage, clarified solvent quickly moves to the upper surface and the solids to the lower surface, with the result that the two phases are thus able to flow countercurrently to each other at maximum velocity. The settling rate in such channels has been observed, in laboratory studies, to be about twice that in a vertical channel. Combining this factor with the cross-sectional area factor gives an overall separation factor for the annular partitioned enlargement section of 6.

Scale Model Contactor. The contactor section proper of the scale model will be 6 in. in diameter and 48 in. long. It will be of pyrex glass so that the contacting performance of the unit can be observed. The solvent processing capacity of the model will be of the order of 4 gph.

9.3 Procedures

In the calcium hydroxide slurry solvent recovery system, pressure drops were small and the equipment was arranged to require only gravity flow throughout. Operation was mostly on a one-shift basis with overnight and weekend shutdowns. Operating procedures are given for the final equipment arrangement (as described in Sec. 9-1); slightly different procedures were used for preliminary investigations with a less complete recovery system.

Charge and Startup Procedures. In charging and startup, normal operating procedure was used except for the step of adding the aqueous calcium hydroxide slurry. Solvent was fed through the wetting and water separator column to the first contactor at the operating rate of 18 liters/hr. When the first contactor was one-quarter full of solvent, the agitator was started and a uniform slurry of 1.8 kg of calcium hydroxide in 5 liters of water was added through a funnel and a 1-in.-i.d. pipe which discharged into the contactor top. The second contactor was charged similarly, and the entire system was filled at the normal solvent feed rate.

The solvent recovery system was shut down by stopping the solvent feed flow, the agitator motors, and the centrifuge motor if the centrifuge was in use. Operation was resumed after this type of shutdown by reversing the shutdown procedure. The calcium hydroxide would redisperse throughout the contactor within 1 min after flow of solvent and agitation were resumed.

Operating Procedures. Normal operation of the recovery system between charge changes was simple; the experimental procedure required periodic checks of the feed solvent flow rate, wetting and wash column interface levels, and the product flow rate and periodic taking of samples. The wetting and wash column interface levels were controlled by the drain valves and water admission valves. Manifolding gave alternate paths for the second contactor product to pass through the centrifuge to the product tank, through the wash column to the product tank, or through the filter and then the wash column to the product tank.

The pyrex glass pipe used and the open contactor tops made possible direct visual observation of operating conditions. In a radioactive plant, radiation monitoring of the second contactor product stream would probably reveal any faulty operation of the recovery system. Poor contacting efficiency or excessive carryover of solids would result in large increases in product solvent activity.

Charge Dissolution and Removal. The spent calcium hydroxide slurries were simply and easily dissolved in place in the contactors by the addition of dilute nitric acid. A calcium hydroxide charge in the first contactor which had treated 1200 liters of solvent was dissolved by adding 1- and 2-liter increments of about 4 N nitric acid until 10 liters had been added. The temperature rose 24°C above the initial temperature during the dissolution; this was of the magnitude to be expected from the heat of neutralization of the calcium hydroxide. With the agitator going, the reaction between the acid and slurry proceeded rapidly without significant gassing or foaming. About 2 liters of solvent was in the contactor before the acid was added. The organic phase became an opaque black and was increased to about 4 liters by material released during the dissolution of the calcium hydroxide. The charge in the second contactor did not contain much of this dark organic material, and the solvent phase was semitransparent after slurry dissolution was complete.

Flushing with water, or with dilute nitric acid followed by water, was used to clean the system for new charges. The contactor drain valves or lines plugged during operation and about 15 psig of back air pressure was required to unplug them. This difficulty could be minimized by introducing the acid at the bottom of the contactor through the lines in which plugging might occur. Concentrated acid would probably be used to reduce waste volumes.

Pressure Drop Measurements. The pressure drop through the contactor was measured by means of a Tygon tubing filled with solvent and connected to the contactor drain valve. With the drain valve open and the tubing free of air bubbles, the height of the liquid level in the tubing above the contactor liquid level gives a pressure difference in inches of solvent.

The pressure drop through each contactor was 2.5 to 4.0 in. of solvent for steady-state operation and 3.5 to 5.0 in. during startup. Air locks and syphoning caused flow difficulties in this part of the system. Since larger units may also have open-top contactors, there will be components depending on gravity flow which should be designed with vents to avoid these difficulties.

The filter was equipped with a 3/4-in.-i.d. pyrex pipe gage glass to determine the pressure drop through a filter.

9.4 Product Solvent Quality Evaluation

Experimental studies indicated that up to 50 ppm of mono- and dibutyl phosphates was tolerable in Thorex process solvent, but a satisfactory method of measuring such low concentrations of TBP decomposition products could not be found. Other organic impurities, such as diluent oxidation or nitration products, were present in such low concentrations that isolation and identification were not feasible. Since the above factors made absolute impurity concentration measurements impractical, an empirical solvent quality test was developed. This

test required shaking 20 ml of solvent for 30 sec with 20 ml of saturated calcium hydroxide solution, filtered just before use, in a 100-ml graduate. The time required for complete separation of the phases and the appearance of the aqueous-organic interface were noted. A solvent with a settling time of less than 120 sec and with no more than a few small shreds of solid impurities at the interface was satisfactory for pulse column operation. Longer settling time or more solids indicated that the solvent could not be depended on to give satisfactory continuous pulse column operation. In the arbitrary series of ratings (see Table 9-1) established in an attempt to make the empirical test quantitative, a product of the solvent recovery system rated "fair" was usable for Thorex pulse column operation, but the recovery system should produce "good" solvent.

The Thorex flowsheet specifies "acid deficient" column-operating conditions. Use of a dilute acid in the test in place of the calcium hydroxide solution might result in a more valid test of quality for solvent to be used in an acidic-flowsheet process.

9.5 Tabulated Results

The solvent recovery operations for the various calcium hydroxide charges used are summarized in Table 9-2. Because analyses to give numerical values for concentrations of solid impurity formers were not practical, the only method of expressing the removal of these materials was the qualitative shake test (see Sec. 9-4).

The tabulated results for removal of radioactive impurities in the solvent (see Tables 9-2 through 9-7) are discussed in Sec. 6.0.

Table 9-1 Solvent Quality Ratings for an Empirical Shake Test

Quality Rating	Coalesence time (sec)	Interface Appearance	Behavior of Thorex Extraction Columns with Solvent
Very poor	---	Thick layer of solids covering the interface	Operation at normal rates probably impossible
Poor	---	Solids easily detectable	Operation for extended periods of time would probably have to be at below normal flow rate
Fair	120 or less	Only small shreds of solids visible	Normal operation probably practical
Good	120 or less	No solids detectable; phases or interfaces hazy	Operation would not be handicapped by solvent quality[a]
Excellent	90 or less	No solids detectable; both phases and the interface clear	Operation would not be handicapped by solvent qualtiy[a]

(a) "Good" and "excellent" quality would not give observable differences in column operation because exposure to column conditions would quickly reduce "excellent" quality solvent to "good."

Table 9-2

Summary of Solvent-Recovery Operations

Feed solvent: 42% or 30% TBP with Amsco 123-15 diluent; feed was "very poor" or "poor" according to ratings established in Table 9-1

Charge No.	Slurry Charge		Feed Flow rate (liters/hr)	Amt. of Product (liters)	Product Quality Tests[a]	Remarks
	$Ca(OH)_2$ (kg)	H_2O (liters)				
1	1.14	0	0-51	470	Fair	H_2O added at various times (4 liters total); charge discarded when slurry became very coarse and gave poor product
2	1.14	0	10-30	330	Fair	1.5 liters of H_2O added after excessive fines came over
3	1.14	0	~22	60	Good	Excessive carryover of fines; stock $Ca(OH)_2$ found to contain large amounts of $CaCO_3$
4	1.14	1	---	None	---	All $Ca(OH)_2$ aggregated into coarse pebbles useless for solvent treatment
5	1.14	0.6	18-22	140	Fair	New $Ca(OH)_2$, carbonate-free, used; very rapid carryover of fines near end of run
6	1.14	2.7	22	100	Fair	Slurry tended to aggregate but kept in suspension by vigorous agitation; then it broke up and fines were carried over
7	1.14	0.65	22	10	Good	$Ca(OH)_2$ aggregated and dropped down
8	1.14	0.15	22	400	Good	Continuous addition of H_2O to contactor top used to control slurry particle size; varying H_2O rates required; charge drained to permit processing

Table 9-2 (continued)

Charge No.	Slurry Charge		Feed Flow rate (liters/hr)	Amt. of Product (liters)	Product Quality Tests[a]	Remarks
	$Ca(OH)_2$ (kg)	H_2O (liters)				
						of solvent with new Amsco-125 diluent without mixing
9	1.14	0.80	22	80	Good	$Ca(OH)_2$ aggregated and dropped down
10	1.14	0	22	250	Good	Large amounts of H_2O required; later found Th and U content of feed to be very high
11	1.8	18	—	None	---	Very stable emulsion formed; contactor operation impossible
12	0.57	4	--	None	---	Semistable emulsions formed; contactor operation impossible
13	1.14	4	22	260	Good	System operated well; Starr filter used; system shut down to permit installation of two-contactor system in radioactive cell
14A, B	1.8	5	16-58 (mostly 22)	1200	Excellent	System operated well; filter used for about half of run, centrifuge for other half
15A, B	1.8	5	18-24	470	Good	Feed was pilot plant Purex solvent (30% TBP); filter appeared to be plugged

(a) See Table 9-1; the quality listed is the most prevalent result obtained.

Table 9-3

Gross Beta and Gamma Decontamination of Purex Solvent from Calcium Hydroxide Slurry Treatment

Feed: used solvent (ICW) from Purex Pilot Plant Run HCP-20
Slurry: 1.8 kg of calcium hydroxide in 5 liters of water for each contactor

Time After Startup (hr)	Vol. of Product (liters)	β Activity (10^3 c/m/ml)[a]			β D.F.	γ Activity (10^3 c/m/ml)			γ D.F.
		Feed	First Contactor Overflow	Product		Feed	First Contactor Overflow	Product	
A. Started 2 weeks after Purex Pilot Plant Run HCP-20									
0	0	----	----	---	---	372	73	135	2.7
1	22	15.5	1.98	0.945	15	381	152	138	2.7
2	40	----	----	---	---	368	153	137	2.7
3	58	13.5	2.19	1.09	13	388	162	139	2.7
4	76	----	----	----	---	381	167	138	2.8
5	98	17.1	3.57	1.75	10	---	---	---	---
7[b]	142	15.3	5.49	2.50	6	---	---	---	---
10	208	16.6	7.10	2.74	6	---	---	---	---
B. Started 6 weeks after Purex Pilot Plant Run HCP-20 without changing slurry charge left from Part A									
1.5	254	10.0	2.17	2.63	4	60.1	20.4	14.9	4.0
2.5	278	14.6	----	----	---	79.1	---	---	---
3[b]	302	----	3.38	2.15	---	---	30.6	21.5	---
5.5	350	11.6	----	2.19	5	78.5	---	22.9	3.4
8	386	----	7.14	----	---	---	39.7	---	---
9	410	7.02	4.91	4.56	1.5	78.5	39.6	24.1	3.3
10	434	----	----	5.42	---	---	---	---	---
11	458	6.76	4.79	6.23	1.1	77.7	38.4	25.9	3.0

(a) Made with 11% geometry.

(b) Feed drum changes and overnight shutdowns.

Table 9-4

Radiochemical Analyses[a] of

Used First Cycle Solvent from Purex Run HCP-20

Source of Radioactivity	Purex ICW Solvent Activity[b]	
	(c/m/ml)	(% of Gross β)
Gross β	607×10^3	100
Ru β	465×10^3	76.5
Zr β	43×10^3	7.1
Nb β	10.5×10^3	1.7
TRE β	---	---
I β	94.2×10^3	15.5

(a) Average analyses for some samples taken by the Pilot Plant and reported to them as corrected to Jan. 8, 1953.

(b) Counted at 10.2% geometry.

Table 9-5

Radiochemical Analyses of a

Purex Solvent[a] After Treatment with a Calcium Hydroxide Slurry

Source of Radioactivity	Product Solvent Activity[b]	
	(c/m/ml)	(% of Gross β)
Gross β	4.48×10^3	100
Ru β	3.82×10^3	85.2
Zr β	0.556×10^3	12.4
Nb β	0.126×10^3	2.8
TRE β	0.004×10^3	0.1
I β	---	---

(a) Analyses of used solvent as fed to the contactor (i.e., after additional decay period following Pilot Plant run) are not available.

(b) Reading taken on March 5, 1953; counted at 10.2% geometry.

Table 9-6

Decontamination of Radioactive Solvent

by Calcium Hydroxide Slurry Treatment

Run No.	Cutie Pie Reading at open surface[a] (mr/hr)		Average Gross β Activity[b] (c/m/ml)		Approximate Decontamination Factor
	Feed	Product	Feed	Product	
1a	100	0			
b			210	12[c]	20[c]
2a	60	0			
b			19000	120	160

(a) Activity of mass of solvent.

(b) Average of determinations on several 20- to 30-ml samples.

(c) Accuracy of counting poor for the 1b product level of activity.

Table 9-7

Removal of Thorium and Uranium by Calcium

Hydroxide Slurry Treatment

Thorium Concentration (mg/liter)		Uranium Concentration (mg/liter)	
Used Solvent Feed	Product	Used Solvent Feed	Product
175	5-22	14.5	0.1-0.34
146-160	6-12	13.5-14.5	0.19-0.21
61	1	0.8	0.2
19	1-6	0.5	0.2-0.31
13-15	2-6	0.5-0.29	0.13-0.43