[redacted]

Cy. 12

MASTER COPY

Classification Cancelled

[redacted]

By Authority Of

By

Date SEP 13 1971

ORNL-1786
Special

CLASSIFICATION CANCELLED
DATE JUL 16 1979 DOE REVIEW ORDER
OAK RIDGE NATIONAL LABORATORY
AUTHORITY DELEGATED BY ERDA 8-15-77

AN ECONOMIC STUDY OF THE CHLORINE TRIFLUORIDE VOLATILITY PROCESS FOR RECOVERY OF URANIUM AND PLUTONIUM FROM IRRADIATED REACTOR FUELS

E. L. Nicholson

[redacted]

CLASSIFICATION CHANGED TO:
BY AUTHORITY OF: TID-1098
BY: JMH 1-30-59

PSBaker/ATbrenly U 5/9/80

OAK RIDGE NATIONAL LABORATORY
OPERATED BY
CARBIDE AND CARBON CHEMICALS COMPANY
A DIVISION OF UNION CARBIDE AND CARBON CORPORATION
UCC
POST OFFICE BOX P
OAK RIDGE, TENNESSEE

[redacted]

This document [redacted] the Atomic [redacted] ents [redacted] prohibited.

[redacted]

CENTRAL RESEARCH LIBRARY
DOCUMENT COLLECTION
FEB 8 1955

MARTIN MARIETTA ENERGY SYSTEMS LIBRARIES
3 4456 0349694 6

ORNL-1786
Special

AEC RESEARCH AND DEVELOPMENT REPORT

AN ECONOMIC STUDY OF THE CHLORINE TRI-FLUORIDE VOLATILITY PROCESS FOR RECOVERY OF URANIUM AND PLUTONIUM FROM IRRADIATED REACTOR FUELS

E. L. Nicholson

Classification Cancelled
Or Changed To
By Authority Of AEC 7/13/71
By E. Goldberg Date 11/10/71

CENTRAL RESEARCH LIBRARY
DOCUMENT COLLECTION
LIBRARY LOAN COPY
DO NOT TRANSFER TO ANOTHER PERSON
If you wish someone else to see this document, send in name with document and the library will arrange a loan.

OAK RIDGE NATIONAL LABORATORY
OPERATED BY
CARBIDE AND CARBON CHEMICALS COMPANY
A DIVISION OF UNION CARBIDE AND CARBON CORPORATION
UCC
POST OFFICE BOX P
OAK RIDGE, TENNESSEE

RESTRICTED DATA
This document contains Restricted Data as defined in the Atomic Energy Act of 1954. Its transmittal or the disclosure of its contents in any manner to an unauthorized person is prohibited.

SECRET

[redacted]

ORNL-1786

[redacted]

4A

CHEMICAL TECHNOLOGY DIVISION

Process Design Section

AN ECONOMIC STUDY OF THE CHLORINE TRIFLUORIDE VOLATILITY PROCESS FOR RECOVERY OF URANIUM AND PLUTONIUM FROM IRRADIATED REACTOR FUELS

E. L. Nicholson

DATE ISSUED:

JAN 11 1955

OAK RIDGE NATIONAL LABORATORY
Operated by
CARBIDE AND CARBON CHEMICALS COMPANY
A Division of Union Carbide and Carbon Corporation
Post Office Box P
Oak Ridge, Tennessee

[redacted]

[redacted]

MARTIN MARIETTA ENERGY SYSTEMS LIBRARIES

3 4456 0349694 6

INTERNAL DISTRIBUTION

1. C. E. Center
2. Biology Library
3. Health Physics Library
4-5. Central Research Library
6. Reactor Experimental Engineering Library
7-11. Laboratory Records Department
12. Laboratory Records, ORNL R.C.
13. C. E. Larson
14. L. B. Emlet (K-25)
15. J. P. Murray (Y-12)
16. A. M. Weinberg
17. E. H. Taylor
18. E. D. Shipley
19-20. F. L. Culler
21. F. C. VonderLage
22. W. H. Jordan
23. J. A. Swartout
24. C. P. Keim
25. J. H. Frye, Jr.
26. S. C. Lind
27. A. H. Snell
28. A. Hollaender
29. M. T. Kelley
30. K. Z. Morgan
31. T. A. Lincoln
32. R. S. Livingston
33. A. S. Householder
34. C. S. Harrill
35. C. E. Winters
36. D. W. Cardwell
37. E. M. King
38. W. K. Eister
39. F. R. Bruce
40. D. E. Ferguson
41. H. K. Jackson
42. H. E. Goeller
43. D. D. Cowen
44. R. J. Klotzbach
45. J. T. Long
46. E. L. Nicholson
47. R. A. Charpie
48. J. A. Lane
49. M. J. Skinner
50. R. E. Blanco
51. R. B. Briggs
52. R. W. Stoughton
53. H. R. Zeitlin

EXTERNAL DISTRIBUTION

54-62. Argonne National Laboratory (1 copy to S. Lawroski)
63. Armed Forces Special Weapons Project (Sandia)
64. Armed Forces Special Weapons Project (Washington)
65-68. Atomic Energy Commission, Washington (1 copy to S. G. English)
69. Babcock and Wilcox Company
70-72. Brookhaven National Laboratory
73. Carbide and Carbon Chemicals Company (K-31 Plant)
74-78. Carbide and Carbon Chemicals Company (K-25 Plant) (1 copy each to John Barber and Harvey Bernhardt)
79. Chicago Patent Group
80. Detroit Edison Company (Louis Basel)
81. Dow Chemical Company (Rocky Flats)
82-85. Du Pont Company, Augusta
86. Du Pont Company, Wilmington
87. General Electric Company (APS)
88-95. General Electric Company, Richland
96. Goodyear Atomic Corporation
97. Hanford Operations Office
98. Iowa State College
99-101. Knolls Atomic Power Laboratory

[redacted]

102-103. Los Alamos Scientific Laboratory
104. Massachusetts Institute of Technology (Benedict)
105. Mound Laboratory
106. Naval Research Laboratory
107-108. North American Aviation, Inc.
109. Pacific Northwest Power Group
110. Patent Branch, Washington
111-114. Phillips Petroleum Company (NRTS)
115-116. University of California Radiation Laboratory, Berkeley
117-118. University of California Radiation Laboratory, Livermore
119. Vitro Engineering Division
120. Westinghouse Electric Corporation
121-135. Technical Information Service, Oak Ridge
136. Division of Research and Medicine, AEC, ORO

CONTENTS

		Page
1.0	Abstract	1
2.0	Introduction	2
3.0	Chlorine Trifluoride Volatility Process Flowsheet	3
3.1	Process Flowsheet Selection Philosophy	3
3.2	Design Basis	3
3.3	Fluorine Supply System; Flowsheet No. 1	3
3.4	Slug-Jacket Removal System; Flowsheet No. 2	10
3.5	Uranium Dissolving, Stripping, and ClF_3 Generation; Flowsheet No. 3	10
3.6	UF_6 Distillation and Plutonium Hydrolysis; Flowsheet No. 4	11
3.7	Feed Preparation and First and Second Cycle Solvent Extraction; Flowsheet No. 5	12
3.8	Solvent Recovery and Waste Handling; Flowsheet No. 6	12
3.9	Nonradioactive Chemical Make-Up and Off-Gas Scrubbing	12
4.0	Building and Plant Design Information	13
4.1	Process Building Design	13
4.2	Slug Handling	13
4.3	Laboratory Building	13
4.4	Other Buildings and Areas	13
5.0	ClF_3 Cost Study	17
5.1	General Methods of Cost Estimating	17
5.2	Cost Summary	17
5.3	Fixed Investment Summary	18
5.4	Operating Cost Summary	20
5.5	Working Capital	20
5.6	SF Inventory	21
5.7	Equipment Costs for Process Operations	21
5.8	Comparison of ClF_3 and Purex Processing Costs	22
6.0	Cost Estimating Methods	22
7.0	Manufacturing Facilities Cost Details	25
7.1	Fluorine Supply System	25

Page

7.1.1 Fluorine Generation Plant 25
7.1.2 Fluorine Compression and Purification 26

7.2 Process Equipment 27

7.2.1 Slug Unloading, Jacket Removal, and Charging Equipment 27
7.2.2 Uranium Dissolving and Stripping 29
7.2.3 ClF_3 Generation and Off-Gas Treatment 30
7.2.4 UF_6 Distillation 32
7.2.5 Plutonium Hydrolysis and Feed Preparation 33
7.2.6 First and Second Cycle Extraction 35
7.2.7 Solvent Recovery 37
7.2.8 Extraction Waste Collection, Neutralization, and Reworking 38
7.2.9 General Nonradioactive Chemical Facilities 40

7.3 General Plant Auxiliary Facilities 41

7.3.1 Low-Temperature Refrigeration System 41
7.3.2 General Utilities: Steam, Electricity, Compressed Air, and Water 41
7.3.3 Gaseous Waste Disposal 42
7.3.4 High-Activity Liquid-Waste Storage 42
7.3.5 Miscellaneous Waste Facilities 43

7.4 Process Building 43
7.5 Laboratory Building 44
7.6 Site Development and General Buildings 44

8.0 Operating Cost Details 45

8.1 Process Chemicals, Consumption and Cost 45
8.2 Fluorine Costs 46
8.3 Annual Operating Cost Details 46

9.0 Notes on the Cost of BrF_3-BrF_5 Volatility Processes 47

9.1 Cost Summary of the BrF_3-BrF_5 Processes 47
9.2 Process and Plant Description 48
9.3 Cost Details

9.3.1 Equipment for the Volatility Portion of the Plant 48
9.3.2 Other Process Equipment 50
9.3.3 Capital Cost Summary 50
9.3.4 Operating Cost 51

		Page
10.0	Acknowledgments	51
11.0	References	52

FIGURES

3-1	Fluorine Supply System, Flowsheet No. 1	4
3-2	Slug Jacket Removal System, Flowsheet No. 2	5
3-3	Uranium Dissolving, Stripping, and ClF_3 Generation, Flowsheet No. 3	6
3-4	UF_6 Distillation and Pu Hydrolysis, Flowsheet No. 4	7
3-5	Feed Preparation and First and Second Cycle Extraction, Flowsheet No. 5	8
3-6	Solvent Recovery and Waste Handling, Flowsheet No. 6	9
4-1	Typical Cross Section of Process Building	14
4-2	Section Elevation of Process Cells	15
4-3	Process Cell and Equipment Arrangement Plan	16

[redacted]

1.0 ABSTRACT

It was estimated that a directly maintained chlorine trifluoride volatility plant designed to process 3 metric tons of uranium per day would have a fixed investment cost of $32,900,000. The feed was assumed to contain 550 g of plutonium per metric ton of uranium, cooled 120 days after irradiation, and the products were assumed to be uranium hexafluoride and a concentrated aqueous plutonium nitrate solution. The cost of processing at the above rate when the plant cost is amortized in 6-2/3 years, and 16 percent is charged for SF inventory and 2 percent for cost of money, is $16,333,000 per year or $27.1 per gram of plutonium. The annual cost can be broken down as follows:

	Per Year	Per Gram of Pu
Amortized capital cost	$5,282,000	$ 8.77
Operating cost	3,988,000	6.62
Working capital	7,000	0.01
Total operating cost less inventory charges	$9,277,000	$15.4
SF inventory cost	$7,056,000	$11.7

The cost estimate includes the cost of fluorine production, waste handling, maintenance, administrative overhead, laboratory, utilities, and all other processing charges for a self-contained plant.

Costs for a bromine trifluoride—bromine pentafluoride volatility plant are practically the same as the corresponding costs for the chlorine trifluoride plant.

Purex costs for the same plant capacity and 6-2/3 years' amortization, exclusive of SF charges, total $8,496,000 per year or $14.1 per gram of plutonium. The Purex processing costs can be put on a comparable basis by adding an estimated charge of $1.24 per pound of uranium for converting uranyl nitrate hexahydrate to uranium hexafluoride by conventional methods, and this gives an annual Purex processing cost of $11,490,000, or $19.1 per gram of plutonium. Thus the saving of the volatility processes may be approximately $2,213,000 per year or $3.7 per gram of plutonium.

[redacted]

2.0 INTRODUCTION

Volatility processes for uranium-plutonium separation and recovery have been considered attractive from earliest Project history.[1] A fractional distillation operation for decontamination and separation, after fluorination of the pile-irradiated metal, appears to be more attractive than multiple precipitation or solvent extraction cycles and subsequent conversion of the products to fluoride salts for metal production or gaseous-diffusion cascade feed material. Attempts to fluorinate uranium metal directly[2, 3] were unsuccessful because of the uncontrollable nature of the reaction, the extremely high temperatures developed, and the partial volatilization of the plutonium with the uranium. Experimental work with the halogen fluorides[4, 5] showed that liquid-phase dissolution of uranium metal with these reagents was feasible and therefore might provide the basis of an effective recovery process.

In September 1952 a chlorine trifluoride process conference[6] was held in Oak Ridge to review the status of the process as developed at K-25 and to outline the work required to develop a complete process on a substantial scale. It was agreed at this meeting that the decision to enter a large-scale process development would depend on the results of a detailed cost study of the process. This report presents the results of the economic study of the chlorine trifluoride process.

In order for the chlorine trifluoride process to be attractive, it must offer significant advantages over the Purex process, which is the lowest cost plutonium-uranium recovery process presently available. The cost study of the Purex process reported by Hull and Zeitlin[7] is believed to present realistic data for a low-cost chemical processing plant and was used as the standard of comparison for evaluating the feasibility of the chlorine trifluoride process.

3.0 CHLORINE TRIFLUORIDE VOLATILITY PROCESS FLOWSHEET

3.1 Process Flowsheet Selection Philosophy

The basic steps in the ClF_3 volatility process include chemical removal of the aluminum jacket from the slugs, uranium dissolution in a halogen fluoride, refluorination of the spent halogen fluoride, separation of UF_6 from fission products and halogen fluorides by distillation, and plutonium recovery by hydrolysis and solvent extraction of the nonvolatile dissolver contents. Since sufficient background of laboratory and pilot plant information had not been obtained to present a fully demonstrated process, flowsheets were chosen (see Figs. 3-1 through 3-6) which represent a conservative economic approach but do not incorporate all the postulated economies inherent in a fully continuous-flow plant. Conversely, the adopted flowsheets minimize the complexities inherent in batch operations.

3.2 Design Basis

The hypothetical plant is designed to process 3 metric tons of uranium per day which is assumed to have been irradiated to give 550 g of plutonium per metric ton of uranium. An average cooling time of 120 days is assumed for the products at the completion of processing.

The products are (1) a concentrated aqueous solution of plutonium nitrate containing 60 g of plutonium per liter, as delivered from the second cycle stripping column, and (2) uranium hexafluoride.

3.3 Fluorine Supply System; Flowsheet No. 1

Thirty-four fluorine cells, including four spares, are provided to produce fluorine gas for reconversion of the ClF, produced in the uranium dissolution, to ClF_3 for reuse. Each fluorine cell produces approximately 1.4 lb of fluorine per hour per 1000 amp and operates comfortably at 3250 amp of total load. The fluorine from the cells contains 10 to 14 percent HF, which is reduced by NaF absorption or dry ice refrigeration to about 4 percent HF prior to compression.[8] The ratio of operating to stand-by cells and the cell cost information are derived from Paducah data.[9] Fluorine cell-operating costs are available from existing fluorine plants[10] and are used directly in lieu of a detailed cost study of fluorine production.

Fluorine containing 4 mole percent HF is compressed to 10 atm to assist in the removal of traces of HF, which would be difficult to remove later from the uranium dissolver system, and to facilitate metering fluorine to the uranium dissolver system which operates at 125 psia. The residual 4 percent HF is removed at 10 atm pressure by a combination of low-temperature refrigeration and absorption by pellets of NaF in a packed tower.[11] The low-temperature-refrigeration HF-removal system

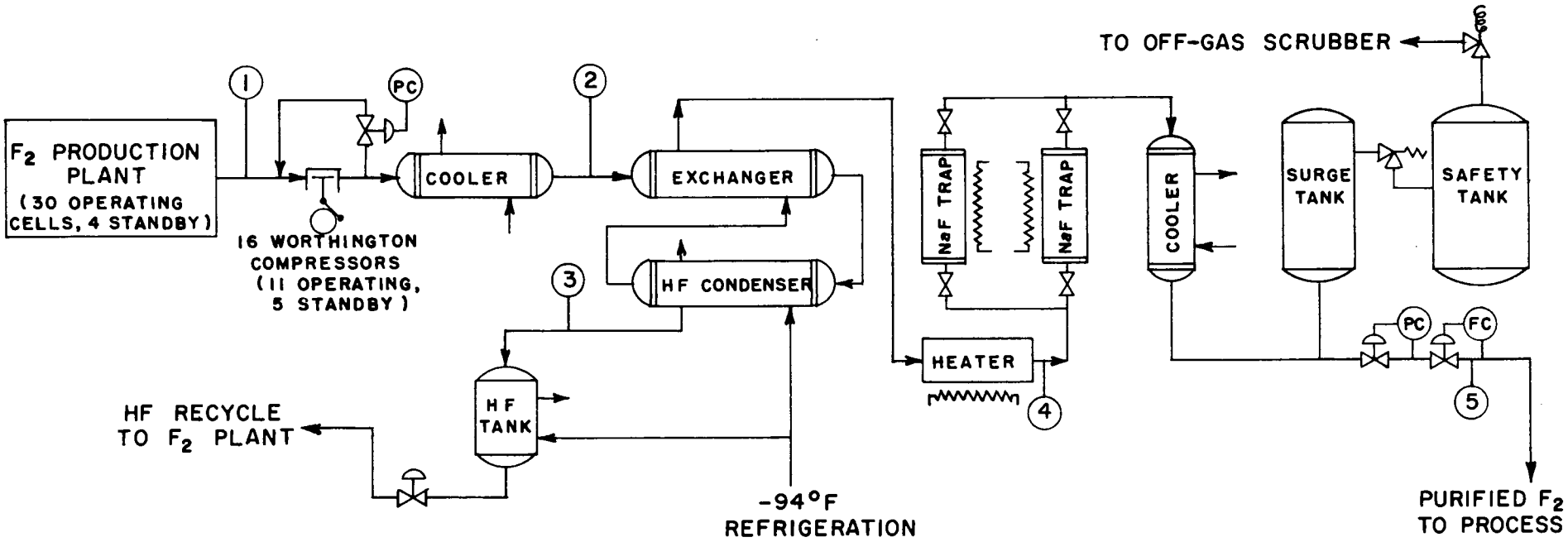

	1	2	3	4	5
F_2, lb / hr	138.1	138.1	—	138.1	138.1
HF, lb / hr	3.02	3.02	2.29	0.73	1.3×10^{-3}
Temp, °F	70	70	-94	212	70
Pressure, psia	~15.7	~147	~147	~147	~125

FIGURE 3-1
FLUORINE SUPPLY SYSTEM
FLOWSHEET NO. 1

[redacted]
O.R.N.L.-LR
DWG.NO. 3538

FIGURE 3-2
SLUG JACKET REMOVAL SYSTEM
FLOWSHEET NO. 2

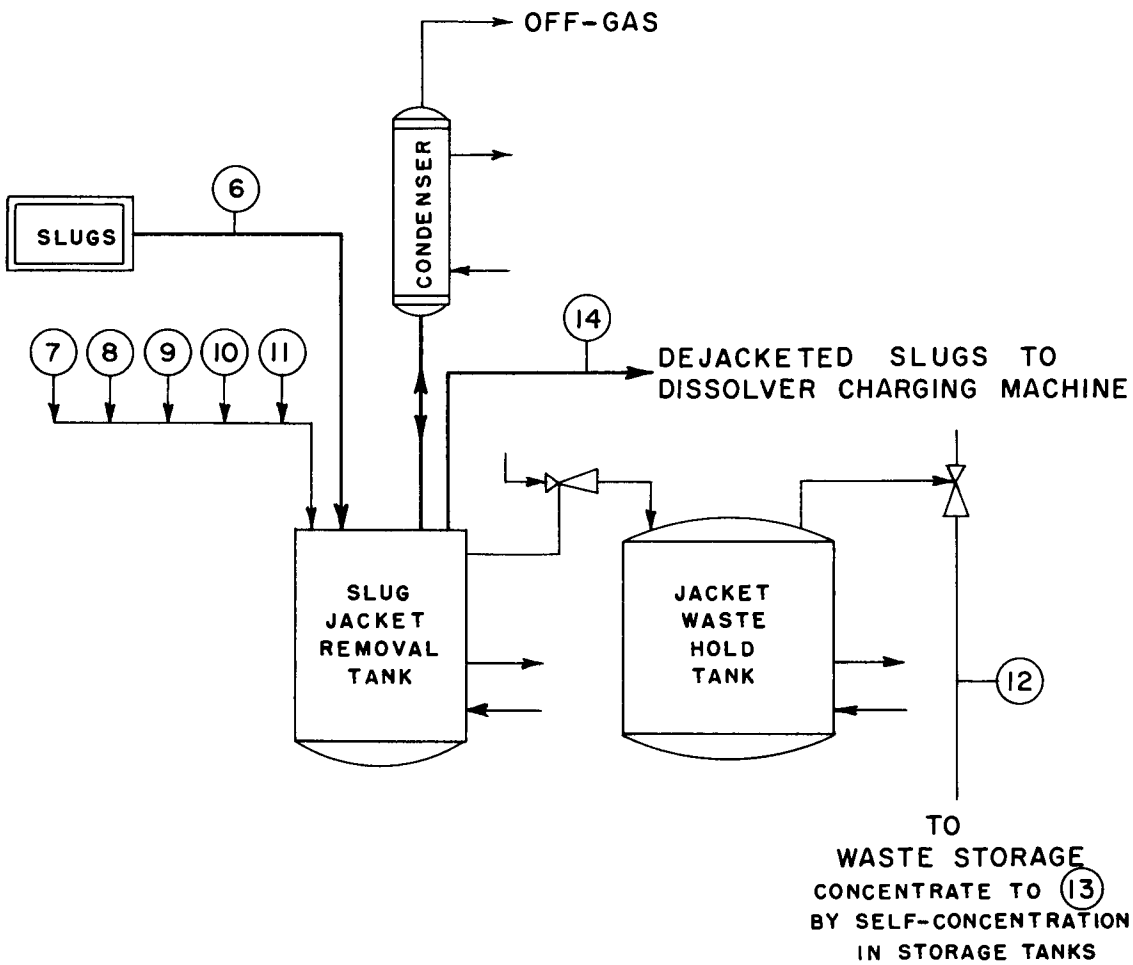

JACKET REMOVAL ONCE A DAY, 3000 KG OF URANIUM PER BATCH

	6	7	8	9	10	11	12	13	14
NaOH, lb / Batch		398.9	398.9						
$NaNO_3$, lb / Batch		797.5	797.5						
HNO_3, lb / Batch					103				
H_2O, lb / Batch		2790	2790	2000	2000	2000			
U, kg / Batch	3000								3000
Pu, g / Batch	1550								1550
Al, lb / Batch	218.1								
Volume, gal		384	384	240	240	240	~1600	~232	

[redacted]

O.R.N.L.—LR
DWG. NO. 3542

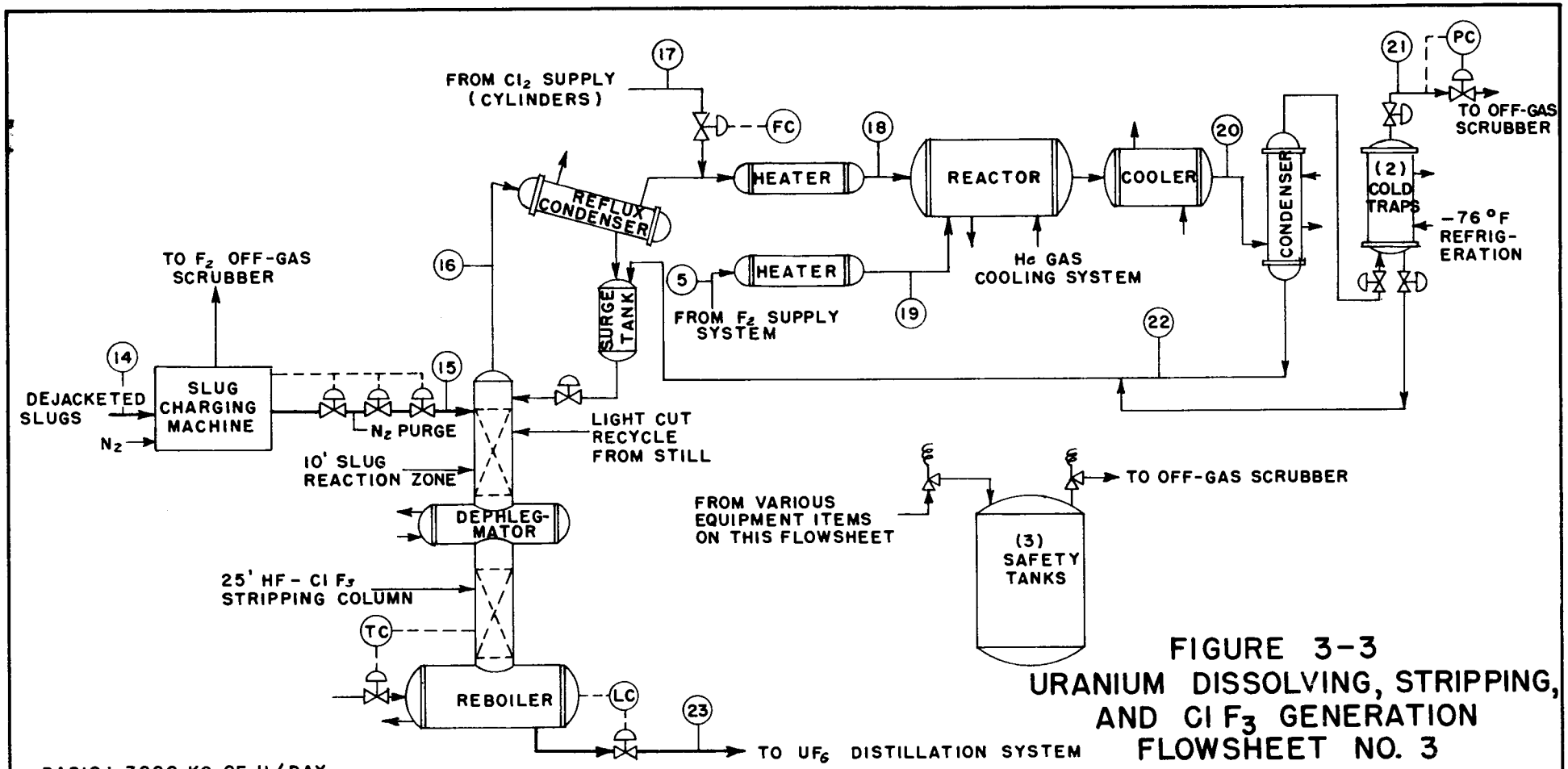

FIGURE 3-3
URANIUM DISSOLVING, STRIPPING, AND ClF_3 GENERATION FLOWSHEET NO. 3

BASIS: 3000 KG OF U/DAY

QUANTITY	14	15	16	17	18	19	20	21	22	23	5
U, lb/hr	275.5	275.5									
Pu, g/hr	68.75	68.75								68.75	
UF_6, lb/hr										407.6	
ClF_3, lb/hr			~2414		~39.3		360.5	SMALL	360.5		
ClF, lb/hr			189.3		189.3		5.9	5.9			
HF, lb/hr			~1056		~11.7	SMALL	SMALL	SMALL	~11.7		
N_2, lb/hr		~30	~30		~30		~30	~30			
Cl_2, lb/hr				3.8	3.8						
F_2, lb/hr						138.1	4.1	4.1			138.1
Temperature, °F	70	176	176	70	527	527	200	-76	70	~200	70
Pressure, psia	14.7	125	125	150	125	125	125	125	125	40	125

[redacted]

O.R.N.L.-LR
DWG. NO. 3541

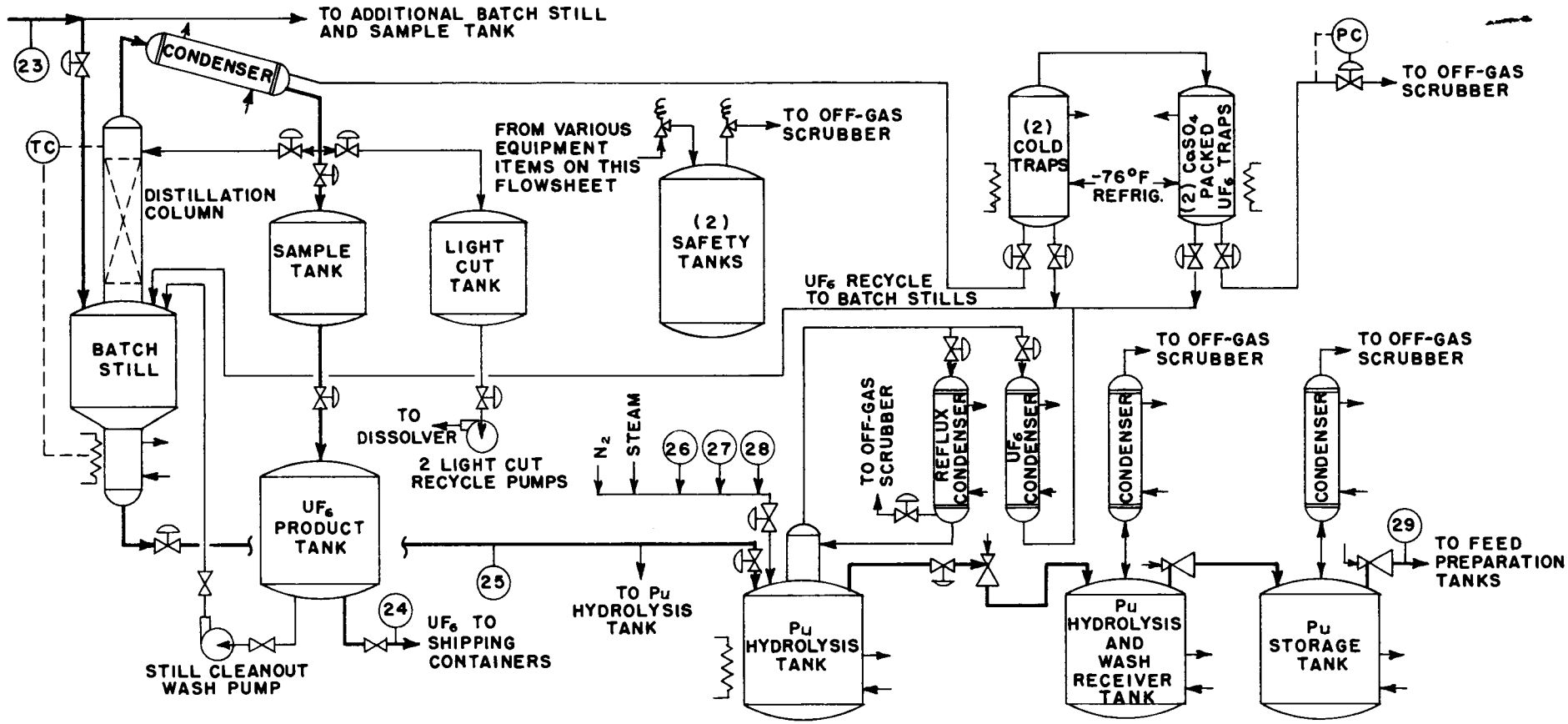

FIGURE 3-4

BASIS : 3000 KG. OF U / DAY

UF_6 DISTILLATION AND Pu HYDROLYSIS FLOWSHEET NO. 4

QUANTITY	23	24	25	26	27	28	29
UF_6 , lb / day	9782	9782	AS NEEDED				~6.3 GMS. U/LITER
Pu, g / day	1650		1650				1650 (6.3 g/LITER Pu (III))
$Al(NO_3)_3 \cdot 9H_2O$, lb				150 (1.5 M)	150		(1.39 M)
100 % HNO_3 , lb				33.7 (2.0 M)	33.7	16.7 (6 M)	(2.3 M)
$Fe(NH_2SO_3)_2$, lb				5.3 (0.08 M)	5.3		(.074 M)
Al / F mole ratio							3
Pressure, psia	40	40	40	14.7	14.7	14.7	14.7
Volume, gal	322.8	322.8		32	32	5.3	69.2

[redacted]

O.R.N.L.—LR
DWG. NO. 3539

FIGURE 3-5

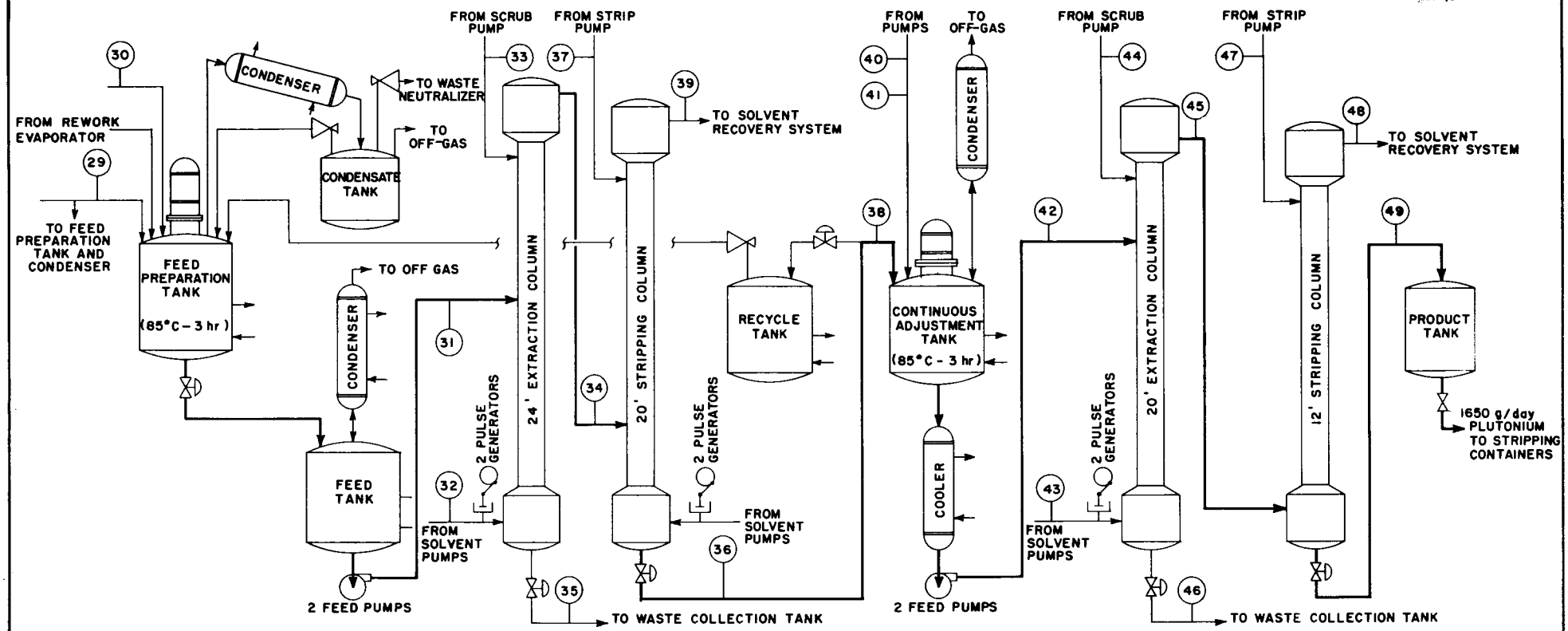

FEED PREPARATION AND FIRST AND SECOND CYCLE EXTRACTION FLOWSHEET NO. 5

QUANTITY	29	30	31	32	33	34	35	36	37	38	39	40	41	42	43	44	45	46	47	48	49
U, gms./liter	~6.3		~3.4			~13.6					9.05										
Pu, gms./liter	6.3, Pu(III)		3.41, Pu(IV)			13.63	(<0.01 %)			2.73, Pu(III)	(<0.1 %)			17.1, Pu(IV)	•		17.1	(<0.01 %)			60
$Al(NO_3)_3 \cdot 9H_2O$, lb	(1.39 M)		(0.75 M)				(0.67 M)														
100 % HNO_3, lb	(2.3 M)	320	(6.0 M)		4.2 (0.5 M)	(~0.1 M)	(5.36 M)		10 (1.2 M)	(0.84 M)	(0.2 M)	73.5 (15.7 M)		(6 M)		1.7 (0.5 M)	(0.1 M)	(4.8 M)		(0.01 M)	(0.39 M)
$Fe(NH_2SO_3)_2$, lb	(0.074 M)		(0.04 M)				(0.036 M)		6.6 (0.2 M)	(0.2 M)				(0.13 M)				(0.1 M)			
$NaNO_2$, lb		7.35	(0.1 M)				(0.089 M)						1.5 (4 M)	(0.1 M)				(0.08 M)			
100 % H_2SO_4, lb																			1.5 (0.25 M)		(0.25 M)
30 % TBP in AMSCO, gal				31.9		31.9		15.95			48				25.5		25.5			25.5	
Volume, gal	69.2	58.5	127.7		15.95		143.8		15.95	15.95		8.9	.64	25.5		6.38		31.9	7.26		7.26
Gal./hr			5.32	1.33	0.67	1.33	6.0	0.67	0.67	0.67	2.0	0.37	0.027	1.06	1.06	0.27	1.06	1.33	0.303	1.06	0.303

[redacted]
O.R.N.L.-LR
DWG. NO. 3543

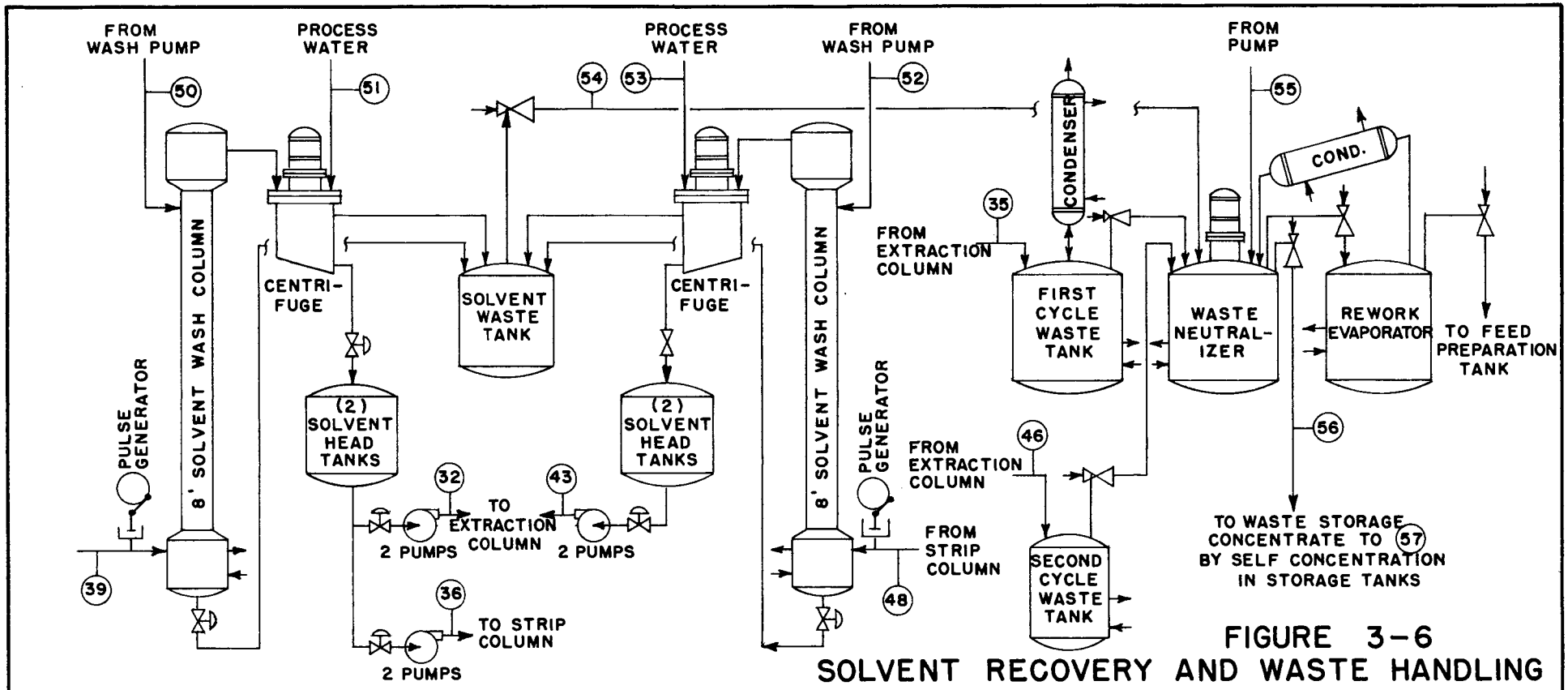

FIGURE 3-6

SOLVENT RECOVERY AND WASTE HANDLING FLOWSHEET NO. 6

BASIS: 3000 KG U/DAY

QUANTITY	32	36	39	50	51	43	48	52	53	54	35	46	55	56	57
U, g / liter			9.05							5				1.3	
Al, M											0.67			0.3	
HNO_3, M			0.2				0.01				5.36	4.8			
F, M											0.22			0.1	
Na_2CO_3, lb				12.7(0.3M)				0.7(0.3M)		(0.1 M)				(0.03 M)	
Na OH, lb													470(19.1M)		
Na, M										0.35	0.09	0.08		4.33	10
30 % TBP in AMSCO, gal	31.9	15.95	48			25.5	25.5								
Volume, gal				48	24			2.6	12	86.6	143.8	31.9	73.6	336	~146
gal / hr	1.33	0.67	2.0	2.0	1	1.06	1.06	0.1	0.5		6.0	1.33			
Fe, M											.036	0.1		0.03	

[redacted]

O.R.N.L.-LR
DWG. NO. 3540

serves to reduce the frequency of regeneration of the NaF traps, which are regenerated by being heated to 400°C, with the HF being swept back into the electrolytic cell feed system.

3.4 Slug-Jacket Removal System; Flowsheet No. 2

Aluminum jackets are removed batchwise from 3000-kg batches of uranium slugs with conventional 10 percent NaOH—20 percent $NaNO_3$ jacket removal solution[12] in a large removable-top vessel. The jacket removal reaction is carried to completion by using a two-step procedure for the sodium hydroxide—sodium nitrate addition, followed by a water and a 5 percent HNO_3 rinse of the bare uranium bars. It is necessary to remove all traces of aluminum from the slug surfaces because aluminum is resistant to attack by fluorine and interhalogens and would therefore accumulate in the dissolver and probably plug the distillation section packing eventually. Jacket dissolution wastes are combined, sampled, and jetted to permanent underground storage tanks.

3.5 Uranium Dissolving, Stripping, and ClF_3 Generation; Flowsheet No. 3

Dejacketed, dry uranium slugs are charged continuously to the dissolver through a nitrogen-purged triple-valved charging device. The uranium is dissolved continuously by ClF_3 at 80°C with 3 moles of HF per mole of ClF_3 added as a catalyst. Hydrogen fluoride and ClF_3 are stripped from the UF_6 product in the lower section of the dissolver. The flowsheet is essentially the same as that reported in reference 6 except that a tall stripping section and a dephlegmator are used in the lower section of the dissolver below the slug bed because of the difficulty of continuously separating HF and ClF_3 from the product UF_6.[13] The size of the reacting bed of slugs is such that one-half of the reported reaction rate at 80°C[6] (2×10^{-6} mole of uranium dissolved per square centimeter per second) will be sufficient to give the desired UF_6 production. This assumed reaction rate may be quite optimistic.[14] It is assumed that the fission product and plutonium solids will be successfully transferred with the UF_6 and that no criticality problem exists here or in any other part of the plant.

Treatment of the dissolver overhead, ClF, with fluorine to regenerate ClF_3 for return to the process is done at the full system pressure of 10 atm rather than at atmospheric pressure, to eliminate pumping of ClF_3 and to get a higher conversion of reactants than is possible at atmospheric pressure. The conservatively calculated theoretical yield of ClF_3 is 98 percent. In plant operation 97 percent conversion is assumed, although small-scale experiments[15] gave lower yields. Thermodynamic data for this reaction are reported in references 16 and 17, and a description of large-scale equipment for the reaction is given in reference 18. It is assumed that the reaction can be carried out safely at elevated pressures. Waste gases are neutralized in a caustic scrubber and vented to the plant stack. The scrubber liquid is stored in underground storage tanks. The possibility of recovering the unreacted fluorine and ClF by fractional distillation at liquid air temperatures was investigated

but could not be economically justified. It is assumed that fission products more volatile than UF_6 will be purged from the system by periodically discharging a dissolver cold trap to the off-gas scrubber instead of recycling to the dissolver system.

3.6 UF_6 Distillation and Plutonium Hydrolysis; Flowsheet No. 4

The bottoms from the dissolver—the UF_6, PuF_3, fission product fluorides, and a small but unknown amount of ClF_3 and HF—flow into one of two parallel batch stills. The ClF_3 and HF are separated from the UF_6 as a low-boiling distillate and recycled to the dissolver, and the purified UF_6 is distilled into the sample tank. The solid PuF and fission product fluorides, together with a small amount of UF_6 as a vehicle, are then drained into one of two hydrolyzer vessels. The bulk of the UF_6 is evaporated from the hydrolyzer and returned to the distillation system. It is assumed that the 1740 g per day of fission products have an average molecular weight of 120 and a positive valence of 4. Further, it is assumed that an amount of uranium (as UF_6) equivalent to the weight of plutonium remains with the solids cake in the hydrolyzer after removal of the bulk of the UF_6. This amount of UF_6 is retained in the cake as a heat transfer agent to prevent fusion of the solids by fission product heating and to increase the theoretical requirements for hydrolysis chemicals, based on total plutonium and fission products, to a practical value. Hydrolysis is done with steam, and aluminum nitrate is added in the ratio of 1 mole of aluminum per 3 moles of fluoride to complex the fluoride ion and thus to enhance plutonium extraction and minimize corrosion of the stainless steel. Nitric acid is then added to prevent plutonium polymerization, and ferrous sulfamate to reduce the plutonium[19] to the tripositive state. The sulfamate ion, $NH_2SO_3^-$, also acts as a corrosion inhibitor.[20] Hydrolyzed plutonium solutions are sampled, stored, and blended prior to final feed preparation operations. The fission product iodine released to the off-gas system during the hydrolysis operation is partially removed by caustic solution scrubbing. The rest of the iodine is adsorbed quantitatively on a packed silver nitrate bed.

It should be noted that previously proposed flowsheets[6] incorporated a fluorochemical vehicle to remove plutonium and fission product fluorides continuously from the UF_6 in a specially designed distillation tower. The fluorochemical was to be continuously stripped of the solids in an external hydrolyzer and dried and reused. This simplifying feature was not incorporated in the present flowsheets because of the concern expressed by K-25 personnel over the hazards inherent in the accidental contacting of ClF_3 with the fluorochemical,[21] the reported decomposition of certain fluorochemicals by irradiation and fluorinating compounds,[14] and the fact that such a transfer of plutonium and fission product solids has not been demonstrated. A new fluorochemical, Butane-37, has been reported recently[22] which appears to have good stability to ClF_3. However, it is believed that inclusion of a fluorochemical vehicle would not significantly affect the processing cost because of the complexity of the fluorochemical handling and recovery system and the maintenance of an expensive fluorochemical inventory.

3.7 Feed Preparation and First and Second Cycle Solvent Extraction; Flowsheet No. 5

Feed batches of the hydrolyzed plutonium and fission products compounds are prepared as needed by oxidizing the plutonium to the tetrapositive state with sodium nitrite and adding nitric acid to make a 6 M acid feed for extraction. The prepared feed is contacted in pulse columns[19] with 30 volume percent tributyl phosphate in Amsco 125-82 (a low-aromatic-content kerosene-type solvent). This process is based on the well-known Purex process;[23] however, the acid recovery operation is omitted because it is uneconomical to attempt to recover acid from the small volumes of acid waste produced.

Residual uranium is separated from plutonium in the stripping column by using a solvent scrub and a reducing, nitric acid-salted, aqueous stripping stream. Preliminary experimental results indicate gross beta and gross gamma decontamination factors of 1.5×10^4 and 4×10^3, respectively.[19] The plutonium in the aqueous stripping product is continuously oxidized with sodium nitrite, and nitric acid is added to make an acid feed, which is again extracted with 30 percent TBP. Plutonium is stripped with 0.25 M sulfuric acid to give a concentrated product, 60 g/liter, which will be suitable for peroxide precipitation without further treatment.

It is anticipated that two cycles of solvent extraction will be adequate because of (1) the high specific activity and plutonium concentration of the initial feed, (2) the beneficial effect upon ruthenium decontamination of nitrite digestion of the first and second cycle feeds, (3) the probable beneficial effect on niobium and zirconium decontamination of the fluoride ion present in the first cycle, (4) the use of a high-acid-extraction and a low-acid-scrub flowsheet, and (5) the use of a low-aromatic-content hydrocarbon diluent (Amsco 125-82) to minimize fission product pickup by the solvent.

3.8 Solvent Recovery and Waste Handling; Flowsheet No. 6

Used solvent is continuously recovered by the standard Purex method which consists of a hot sodium carbonate solution wash in pulse columns followed by centrifugation to remove solvent decomposition products. Separate solvent recovery systems are specified for the two extraction cycles to minimize product contamination by fission products carried by the first cycle solvent.[23]

Aqueous wastes are neutralized with sodium hydroxide to produce a solution containing sodium aluminate; excess caustic is added for solution stability purposes. It is assumed that self-concentration of the wastes can be achieved in the underground final storage tanks by fission product heat generation.

3.9 Nonradioactive Chemical Make-Up and Off-Gas Scrubbing

No flowsheets are presented for these two areas because of the simplicity of the equipment and process operations. However, the required equipment for these areas is tabulated in the detailed breakdown of the cost estimate in Sec. 7.0.

4.0 BUILDING AND PLANT DESIGN INFORMATION

4.1 Process Building Design

The process building layout shown in Figs. 4-1 and 4-2 consists of seven processing cells in a cell block 91 ft long by 40 ft wide, exclusive of the slug-receiving tunnel and miscellaneous galleries. Cells 1, 5, 6, and 7 are exclusively for aqueous processing operations and are lined with stainless steel on the floors and to a height of 6 ft on the walls. Cells 2, 3, and 4 are for handling of fluorine and fluorine chemicals and are lined with stainless steel on all surfaces; cell 4 is also for plutonium compound hydrolysis. The off-gas tunnel from cells 2, 3, and 4 is lined with stainless steel on all surfaces, and the radioactive pipe tunnel is lined on the floor and to a height of 3 ft on the walls. All cell floors are on a common level, and the standard cell depth is 30 ft, except for cell 7 which is 32.5 ft deep by virtue of a reduction in required roof shielding, and cell 2 which is 50 ft deep to accommodate the dissolving equipment.

The operating deck level of the building is enclosed in a blast-resistant steel and transite structure. Aqueous solution make-up and feeding facilities are also housed on this level. Equipment arrangement in the cells is shown in Fig. 4-3.

4.2 Slug Handling

Slugs in baskets are unloaded from casks on railway flatcars in a special structure adjacent to cells 1 and 2. A remotely controlled monorail hoist lifts the basket from the flatcar cask and lowers it into the jacket-removal dissolver for the coating-removal operation. After the jacket has been removed, the basket of dejacketed slugs is lifted from the coating dissolver and then dumped into the hopper of the continuous-dissolver charging machine. The empty bucket is returned to the flatcar cask. The cell concrete has slots to permit passage of the hoisting cables and the bucket (see Fig. 4-3) from the tunnel to the dissolver compartment. Operation of the monorail is viewed with periscopes.

4.3 Laboratory Building

The laboratory building is illustrated in Fig. 4-1. It is a two-story structure running the length of the processing building and contains all the plant analytical laboratories, shops, stores, offices, and personnel facilities.

4.4 Other Buildings and Areas

Other plant facilities include (1) a 34-cell fluorine production plant, (2) a fluorine purification and compression plant, (3) a low-temperature refrigeration plant, (4) a bulk-chemical storage building, (5) a laboratory-waste evaporator (outdoor construction), (6) a retention basin, (7) an underground liquid-waste storage area, (8) a burial ground, (9) a waste burning ground, (10) a stack and filters for gaseous waste, and (12) a steam, water, and compressed air plant and electrical distribution equipment.

[redacted]
O.R.N.L.- LR
DWG. NO. 3535

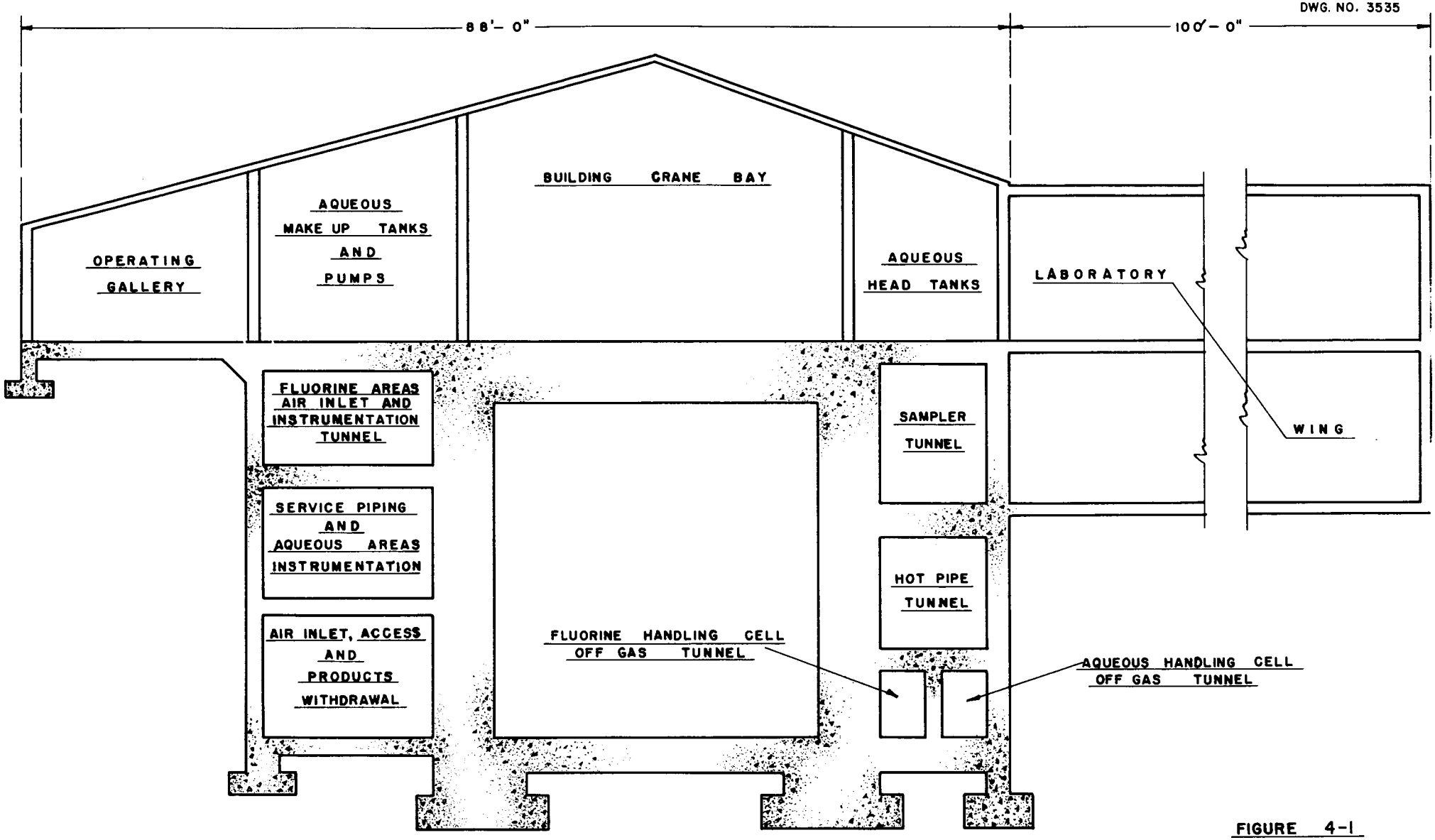

SECTION B-B

SCALE 0 5 10

FIGURE 4-1
TYPICAL CROSS SECTION OF PROCESS BUILDING

[redacted]
O.R.N.L.-LR
DWG. NO. 3536

FIGURE 4-2
SECTION ELEVATION
OF
PROCESS CELLS

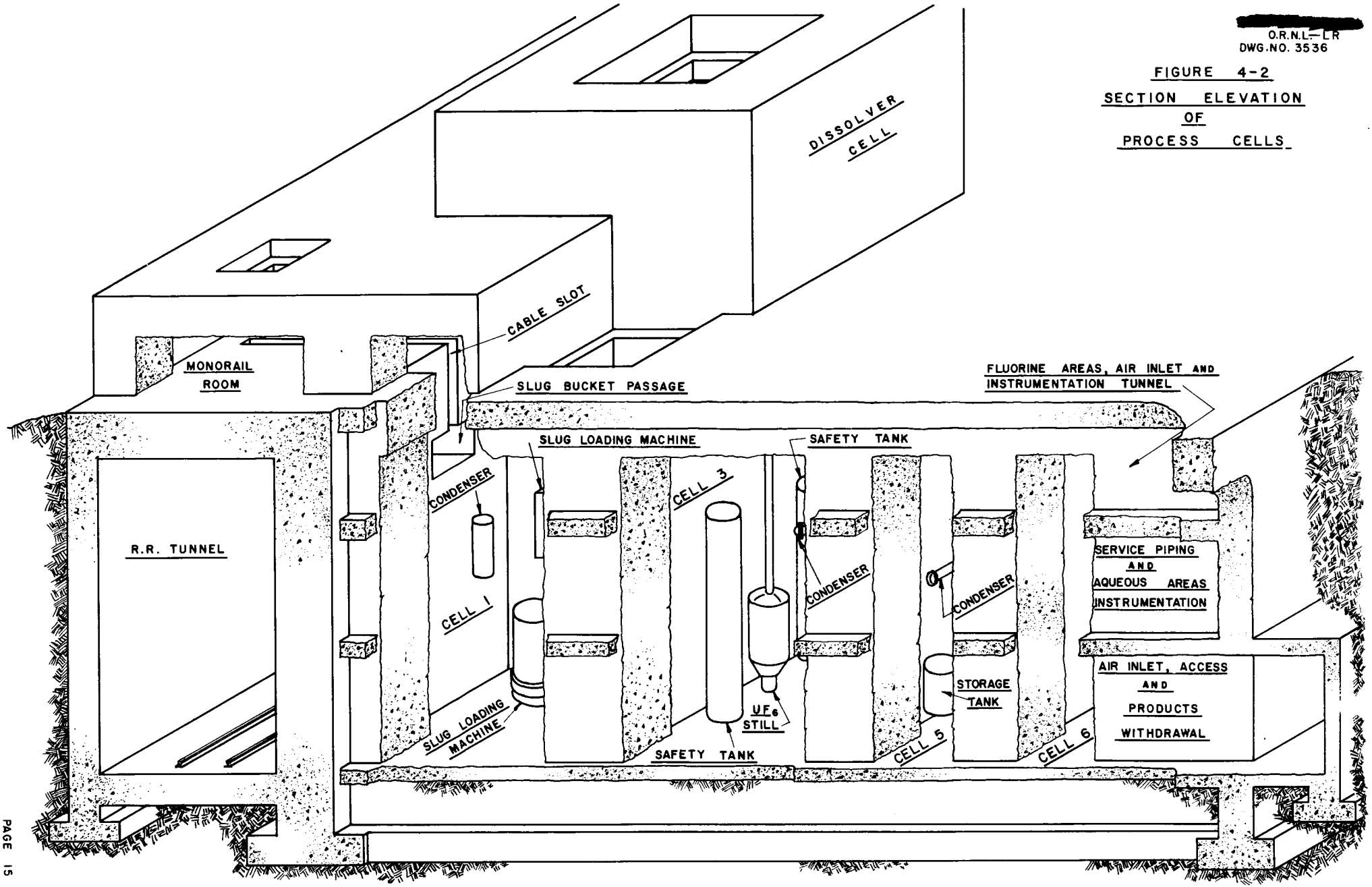

[redacted]
O.R.N.L-LR
DWG. NO. 3537

CELL 1

1. JACKET REMOVAL DISSOLVER
2. CONDENSER
3. SLUG LOADING MACHINE
4. JACKET WASTE HOLD TANK

CELL 2

1. DISSOLVER and REBOILER
2. CONDENSER
3. SURGE TANK
4. ClF_3 REACTOR
5. COOLER
6. CONDENSER
7. COLD TRAP
8. SAFETY TANK

CELL 3

1. UF_6 STILL
2. CONDENSER
3. SAMPLE TANK
4. LIGHT CUT TANK
5. PRODUCT TANK
6. SAFETY TANK
7. COLD TRAP
8. $CaSO_4$ TRAP

CELL 4

1. HYDROLYSIS TANK
2. CONDENSER
3. RECEIVER TANK
4. IODINE REACTOR
5. F_e OFF GAS SCRUBBER

CELL 5

1. STORAGE TANK
2. FEED PREPARATION TANK
3. CONDENSER
4. CONDENSATE TANK
5. FEED TANK

CELL 6

1. EXTRACTION COLUMN
2. STRIPPING COLUMN
3. ADJUSTMENT TANK
4. FIRST CYCLE RAFFINATE TANK
5. WASTE NEUTRALIZER
6. WASTE EVAPORATOR
7. CONDENSER

CELL 7

1. EXTRACTION COLUMN
2. STRIPPING COLUMN
3. PRODUCT TANK
4. RECYCLE TANK
5. SECOND CYCLE RAFFINATE TANK
6. FIRST CYCLE SOLVENT COLUMN
7. " " " CENTRIFUGE
8. HOLD TANK
9. SECOND CYCLE SOLVENT COLUMN
10. " " " CENTRIFUGE
11. " " " HOLD TANK
12. SOLVENT WASH WASTE TANK

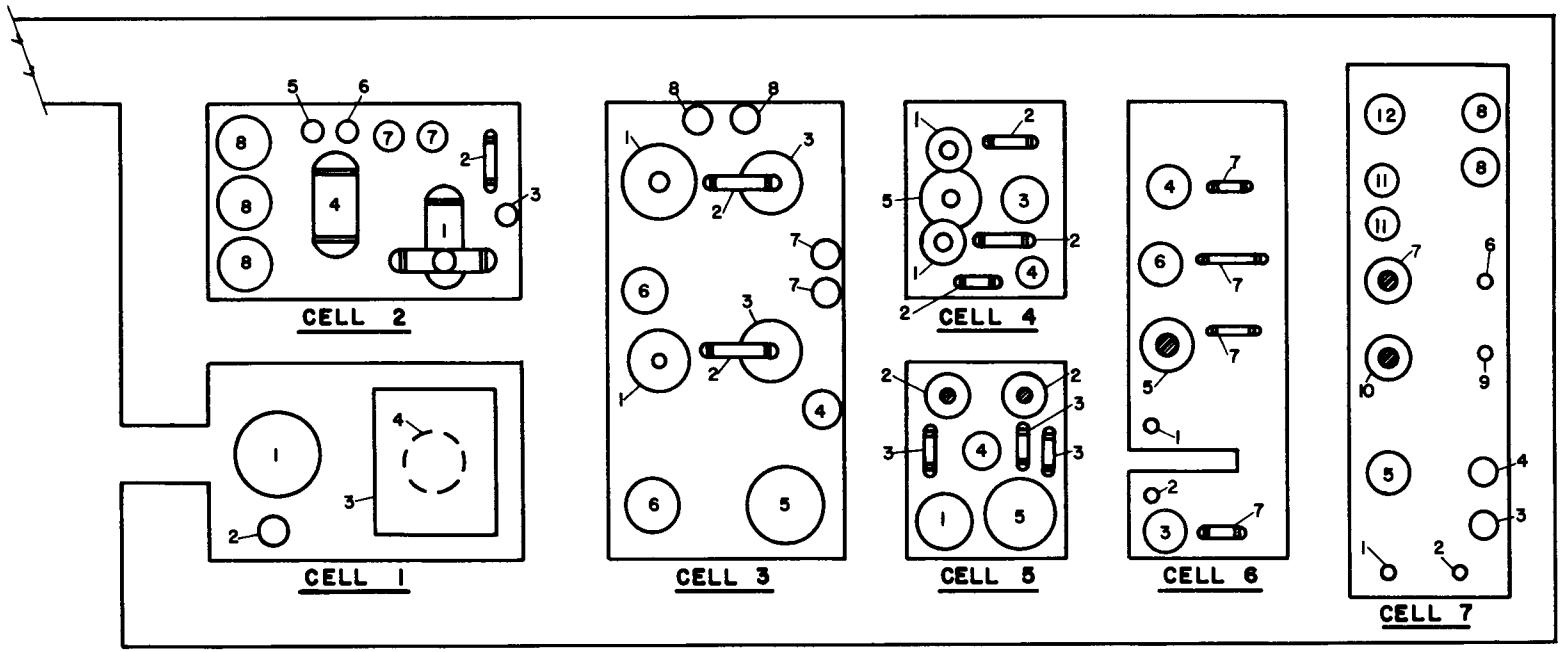

SCALE: 0 5 10

FIGURE 4-3

PROCESS CELL AND EQUIPMENT ARRANGEMENT

PLAN

5.0 ClF_3 COST STUDY

5.1 General Methods of Cost Estimating

Cost estimates were prepared by (1) inclusion of actual cost data (e. g., fluorine capital and operating costs); (2) estimation of costs from literature data (e. g., estimation of tank costs from volume-vs.-cost curves for Idaho Chemical Processing Plant equipment); (3) application of a factor to some basic cost (e. g., piping costs expressed as factors multiplied by the installed equipment costs); and (4) estimates where no data were available (e. g., a slug-charging machine).

A detailed description of the various methods used in the cost estimate is given in Sec. 6.0. Estimates are all corrected to an Engineering News Record construction cost index of 600.

5.2 Cost Summary

Tabulated below are the overall plant costs:

Cost	Annual	Per g of Pu
Fixed investment	$ 5,282,000	$ 8.77
Operating cost	3,988,000	6.62
Working capital	7,000	0.01
SF inventory	7,056,000	11.72
Total	$16,333,000	$27.1

In this presentation all costs are charged to plutonium, the fixed investment is charged off at 15% per year plus 1% for average interest on the capital investment, the working capital is charged at 2% on the money for one month's operating expenses, and the SF inventory charge is set at 16% per year for an assumed plutonium value of $150 per gram and an assumed uranium value of $40 per kilogram. The SF material holdup time is 120 days.

5.3 Fixed Investment Summary

Process building		$2,847,000
Process equipment in building:		
Slug unloading, jacket removal, and charging	$501,100	
Uranium dissolving and stripping	494,100	
ClF_3 generation and off-gas treatment	714,300	
UF_6 distillation	883,300	
Plutonium hydrolysis and feed preparation	396,900	
First and second cycle extraction	335,200	
Solvent recovery	303,600	
Extraction waste collection, neutralization, and reworking	118,300	
General nonradioactive chemical facilities	47,700	3,795,000
Laboratory building		1,980,000
Liquid waste storage		1,223,000
Gaseous waste disposal		79,000
Miscellaneous waste facilities		434,000
Services:		
Steam	282,000	
Electrical distribution	160,000	
Emergency electrical services	140,000	
Compressed air	45,000	
Water	98,000	725,000

34-cell fluorine plant (installed cost)	2,282,000
Fluorine compression and purification	426,000
Low-temperature refrigeration	129,000
	13,920,000
Site development and general buildings	2,088,000
Subtotal	16,008,000
Engineering, design, and inspection, 20% of subtotal[a]	3,202,000
Construction and construction fee, 22% of subtotal, exclusive of cost of installed fluorine plant[b]	3,020,000
Contingency, 40% of subtotal[c]	6,403,000
Preoperation and startup[d]	3,988,000
Total	32,621,000
Land, 4 sq miles at $150 per acre[e]	384,000
Total fixed investment	$33,010,000

The fixed investment is amortized in 6-2/3 years plus 1% average interest on the investment; this is equivalent to actually amortizing at 16% per year.

Annual capital cost, 16% of $33,010,000	$ 5,282,000

[a]The 15% engineering cost reported in reference 7 was increased to 20% because of the more complicated volatility process. This factor is probably low but is used to permit comparison with costs in reference 7.

[b]The 22% construction plus construction fee factor is from reference 7 and is probably low.

[c]The size of the contingency factor is a function of the state of engineering knowledge of the process and the experience of the estimater. The 40% factor is conservative according to the standards given in reference 24.

[d]Estimated to be one year's operating expense.

[e]Price will vary considerably with plant location.

5.4 Operating Cost Summary

Tabulated below are the basic annual plant operating costs:

Chemicals	$ 164,000
Labor, supervision, and overhead	1,708,200
Maintenance material	327,500
Operating supplies	61,300
Steam	124,100
Water	36,500
Compressed air	6,600
Inert gas	19,300
Electricity	87,600
Refrigeration plant	10,200
Fluorine plant	942,200
Control laboratory	500,000
Total	$3,988,000

5.5 Working Capital

The working capital is defined[25] as the cost of the money tied up in supplies and cash on hand to meet one month's operating expenses. It should include the cost of money for materials tied up in plant fill-up, but this is relatively small and is neglected. No accounts are receivable for AEC contracts, and product in process is charged to SF inventory.

Working capital, 2% of $3,988,000/12 = $6,700

5.6 SF Inventory

The SF inventory charges are based on 120 days' average holdup of materials from reactor to final product shipping containers and on the assumed dollar values for uranium and plutonium as given in the following:

Uranium, $40/kg x 3,000 kg/day x 120 days	$14,400,000
Plutonium, $150/g x 1,650 g/day x 120 days	29,700,000
Total	$44,100,000
SF inventory charge, 16% of $44,100,000	$ 7,056,000

5.7 Equipment Costs for Process Operations

The equipment costs for the various process operations are given in the following table. An approximate allocation of a proportional part of the cost of the main process building to each operation was made by estimating the building floor area occupied by each operation and is included in the table for a rough comparison of total costs.

Operation	Cost	% of Cell Area[a]	Cost, Including Building[b]
Slug unloading, jacket removal, and charging	$501,100	22.7	$1,147,000
Uranium dissolving and stripping	494,100	6.2	671,000
ClF_3 generation and off-gas treatment	714,300	7.4	925,000
UF_6 distillation	883,300	21.5	1,496,000
Plutonium hydrolysis and feed preparation	396,900	9.9	679,000

[a]The railroad tunnel was arbitrarily assigned an effective area that is one-third the actual tunnel area because special galleries and tunnels do not service this portion of the building.

[b]Building cost taken as $2,847,000. General nonradioactive chemical facilities are not included since they supply several areas, and the equipment is located in otherwise unused building space.

Operation	Cost	% of Cell Area[a]	Cost, Including Building[b]
First and second cycle extraction	$335,200	14.8	$ 757,000
Solvent recovery	303,600	11.1	620,000
Extraction waste collection, neutralization, and reworking	118,300	6.4	301,000

5.8 Comparison of ClF_3 and Purex Processing Costs

Hull and Zeitlin report[7] processing costs for a direct-maintenance Purex plant having a design capacity of 3 metric tons per day of uranium containing 550 g of plutonium per ton. The plant produced concentrated uranyl and plutonium nitrate solutions. Conversion of Purex uranyl nitrate to uranium hexafluoride by conventional means has been estimated to cost $1.24 per pound of uranium, including amortization.[26] If this price addition is made to put the Purex plant uranyl nitrate product on a uranium hexafluoride basis, the following cost tabulation results:

	Annual	Per g of Pu
Purex fixed investment	$ 5,169,000	$ 8.60
Purex operating cost	3,320,000	5.50
Purex operating capital	7,000	0.01
Purex cost, subtotal	$ 8,496,000	$14.10
$UO_2(NO_3)_2 \longrightarrow UF_6$ conversion	2,994,000	5.00
Processing cost, total	$11,490,000	$19.10
ClF_3 process cost	9,277,000	15.40
ClF_3 process saving	$ 2,213,000	$ 3.70

6.0 COST ESTIMATING METHODS

In the preparation of this cost estimate, standard methods were, in general, used. Exceptions were that a detailed estimate for each process vessel was not made, and higher than normal factors on equipment costs were used in the fluorine-handling plant areas to compensate for the high-quality fabrication techniques and special safety features required. Preliminary cost data from the directly maintained Idaho Chemical Processing Plant, which uses batch feed preparation and a continuous solvent extraction product recovery system for radiochemical processing, were used as the primary source of information. Equipment prices and piping factors for the fluorine-

handling areas have been reviewed with K-25 personnel and in view of their experience appear to be reasonable.[9]

Cost Item	Estimating Method
Process equipment (installed)	Aqueous processing equipment. Cost curves relating total cost and volume in gallons for tanks or total heat transfer area in square feet for heat exchangers and condensers were prepared from ICPP data by correcting manufacturers' bids to an Engineering News Record cost index of 600 and plotting on log-log graph paper. Good correlation of costs in each of the classes of process equipment, such as nonradioactive chemical make-up vessels, jacketed cell vessels, and cell vessels of complex shape, was observed. Since freight costs are usually less than 2% of the cost of the unit, estimated vendor's prices were assumed to be delivered prices. The delivered cost was multiplied by 1.14 to arrive at the installed cost of the equipment. The factor 1.14 is derived from ICPP data and is low by usual standards but appears reasonable in view of the high unit cost of the equipment. Fluorine equipment. Costs for the installed items were derived by the same method that was used for the aqueous equipment except that the base cost was multiplied by an additional factor. This additional factor was used, in spite of the insignificant difference in stainless steel and nickel or monel equipment base costs, to allow for such features as pressure construction, extremely careful fabrication quality control, and special double-tube-wall heat exchangers with a leak detector arrangement. The factors are: Tanks: 1.5 to 2 times the stainless steel base cost Heat exchangers: 4, 5, or 6 times the stainless steel base cost Prices were assumed for certain other equipment items (such as a slug-charging machine) for which there were no previous data or design. ICPP costs were assumed directly for standard items such as pumps, agitator, and filters.
Process piping	Process piping costs were determined by multiplying the installed equipment cost by an appropriate factor as follows: 0.6 for nonradiochemical fluorine-handling and low-temperature-refrigeration piping.[9, 27] 1.5 for aqueous process piping.[7]

2.0 for radiochemical fluorine-handling piping based on the assumption that piping will be more expensive than aqueous radiochemical piping to allow for additional safety devices, strip heaters on lines, etc. (This factor may seem low, but it is applied to equipment having a high unit cost.)

Instrumentation

Instrumentation costs were determined from a detailed listing of the probable instrument requirements for each equipment item. Instrumentation included liquid-level, density, flow, temperature, and pressure measurement equipment along with accompanying service control valves and on-off and throttling process control valves, alarms, and other devices. For fluorine service, the basic cost of the primary sensing device (transmitters) was doubled to allow for special design.

The total tabulated instrumentation purchase cost was multiplied by the factors 1.39 to include piping, panels, and unlisted auxiliaries, and 1.67 for installation labor. The factors are based on ICPP data.[7] For fluorine service the 1.39 factor was increased to 1.5. Because of the use of multiple-point instrumentation, tabulated instrument charges may not apply exclusively to a particular equipment unit, as the master receiver charged to a particular unit may also service several other units.

Mechanical and special equipment

This equipment was listed and estimated directly.

Buildings

The cost of the process building was estimated by applying unit volume costs to concrete and to superstructure and area costs to stainless steel linings, and adding standard estimated amounts for excavation, backfill, painting, electrical services, etc. Although a smaller number of process samples is indicated for the ClF_3 plant than for the Purex plant,[7] the difficulties encountered in handling the radiofluorine analytical samples are much greater. Therefore the analytical laboratory was estimated to be equivalent in dollar value to the Purex plant laboratory. The cost of other structures can be determined from general literature data.

Service facilities

Unit costs are available in the literature to determine total cost of services.

Liquid waste storage

Costs were determined by applying reported Hanford costs[7] to storage requirements.

Other facilities and site developments	Costs of burial grounds, waste lagoons, etc., were obtained from reference 7. Site development is estimated to be 8 to 10% of the cost of the manufacturing plant. Land costs will vary with location and are included as an order of magnitude value.
Operating costs	Unit costs were applied to labor, raw materials, fluorine production, and services. Service requirements and the analytical load are estimates.
Engineering, design, construction, and preoperational costs	The factors covering these items of expense are those suggested for direct-maintenance plants,[7] suitably altered to apply to volatility plants.

7.0 MANUFACTURING FACILITIES COST DETAILS

This section contains a detailed breakdown of all capital costs arranged in the same order as the process description in Sec. 3.0.

7.1 Fluorine Supply System

7.1.1 Fluorine Generation Plant

30 Operating cells (installed cost)[9] [a]	$2,250,000
4 Stand-by cells (installed cost)[9]	32,000
Total cost of facility	$2,282,000

[a] Price includes building, electrical services, piping, and instruments.

7.1.2 Fluorine Compression and Purification

	Item Cost	Instrumentation Cost
16 Worthington fluorine compressors[a]	$128,000	$ 1,720
1 F_2 cooler, 20 sq ft, water cooled	4,020	
1 F_2 heat exchanger, 50 sq ft	6,000	2,133
1 HF condenser, 100 sq ft, Freon cooled	9,600	
1 HF collector tank, 10 gal, Freon cooled	600	2,403
1 F_2 heater, 2 kw	750	1,012
2 NaF-packed traps, electrically regenerated	5,000	2,024
1 F_2 cooler, 20 sq ft, water cooled	4,000	1,008
1 Surge tank, 20 cu ft	7,140	420
1 Safety tank, 200 cu ft	21,000	1,170
F_2 flow and pressure control	0	5,283
Delivered equipment	$186,110	$17,173
Installation, 0.14 x D. E.	26,055	
Installed equipment	$212,165	
Piping, 0.6 x I. E.	127,299	
Equipment and piping	$339,464	
Instrument installation and piping, 1.5 x 1.67 x D. E.		43,018
		$60,191

[a]Price assumes a fully developed compressor and quantity discount.[8]

	Item Cost	Instrumentation Cost
Installed instrumentation	60,191	
Total process equipment	$399,655	
Building, 37,500 cu ft at $0.7/cu ft[30][a]	26,250	
Total cost of facility	$426,000	

[a] Data corrected to index 600.

7.2 Process Equipment

7.2.1 Slug Unloading, Jacket Removal, and Charging Equipment

Equipment in cell	Item Cost	Instrumentation Cost
1 Jacket removal dissolver, 4 ft 6 in. diam by 8 ft high	$ 16,200	
1 Reflux condenser, 400 sq ft	6,700	$ 4,848
1 Coating waste hold tank, 6 ft diam by 9 ft 6 in. high	14,000	
1 Slug conveying and pressurized loading machine (estimated)	80,000	16,863
Subtotal	$116,900	$21,711
Equipment outside cell		
1 $NaOH-NaNO_3$ metering tank, 500 gal	$ 2,400	$ 580
1 Agitator, 1 hp	750	
1 HNO_3-H_2O metering tank, 275 gal	1,550	530
1 Agitator, 1/2 hp	560	
2 Transfer pumps, 50 gpm	1,080	

	Item Cost	Instrumentation Cost
1 26 Percent $NaNO_3$ solution make-up tank, 500 gal	$ 2,500	$ 500
1 Agitator	1,280	
1 Transfer pump	540	
1 26 Percent $NaNO_3$ storage tank, 3000 gal	8,100	160
Subtotal	$18,760	$1,770
Delivered equipment, total	$135,660	23,481
Installation, 0.14 x D. E.	18,992	
Installed equipment	$154,652	
Piping, 1.5 x I. E.	231,978	
Equipment and piping	$386,630	
Instrument installation and piping, 1.39 x 1.67 x D. E.		54,476
Installed instrumentation	77,957	$77,957
1 Remote sampler	3,000	
Total process equipment	$467,587	
2 Slug transfer buckets	3,000	
1 Slug loading crane(7)	13,500	
2 Periscopes for slug charging(7)	17,000	
Total cost of equipment	$501,100	

7.2.2 Uranium Dissolving and Stripping

Equipment in cell	Item Cost	Instrumentation Cost
1 Slug dissolver, 12 in. i.d., 13.5 in. o.d., by 45 ft high, including a 160-sq ft dephlegmator, a 440-sq ft reboiler, and a 24-ft-high stripping section	$ 75,000	$16,910
1 Reflux condenser, 100 sq ft, water cooled	7,980	2,726
1 Reflux surge tank, 5 gal	1,500	3,476
1 Safety tank, 200 cu ft	21,000	4,670
Delivered equipment	$105,480	$27,782
Installation, 0.14 x D. E.	14,770	
Installed equipment	$120,250	
Piping, 2.0 x I. E.	240,500	
Equipment and piping	$360,750	
Instrument installation and piping, 1.5 x 1.67 x D. E.		69,594
Installed instrumentation	97,376	$97,376
4 Remote samplers (estimated cost) (dry)	36,000	
Total cost of equipment	$494,100	

7.2.3 ClF_3 Generation and Off-Gas Treatment

Dry equipment	Item Cost	Instrumentation Cost
1 F_2 heater, $\sim$5 kw	$ 1,000	$ 4,122
1 ClF heater, $\sim$5 kw	1,000	
1 ClF $\rightarrow$ ClF_3 reactor, 700 sq ft, helium cooled	60,000	2,141
1 ClF_3 cooler, 200 sq ft, helium cooled	16,000	
1 ClF_3 condenser, 10 sq ft, water cooled	3,280	4,583
2 UF_6 and ClF_3 cold traps, 150 sq ft, refrigerant cooled	26,000	
2 Safety tanks, 200 cu ft	42,000	9,340
1 F_2 off-gas heater, $\sim$5 kw and pressure control equipment	1,000	6,255
Total delivered equipment	$150,280	$26,441
Installation, 0.14 x D. E.	21,039	
Installed equipment	$171,319	
Piping, 2.0 x I. E.	342,638	
	$513,957	
Instrument installation and piping, 1.5 x 1.67 x D. E.		66,235
Installed instrumentation	92,676	$92,676
2 Remote samplers (dry)	18,000	
Equipment and piping, subtotal	$624,633	

Miscellaneous equipment	Item Cost	Instrumentation Cost
1 F_2 off-gas scrubber tower, 6 in. diam by 15 ft high	$ 3,000	
2 Scrubber tower sump tanks, 100 gal	3,000	$ 4,472
2 Scrubber fluid recirculation pumps	2,000	
1 Helium gas cooler for ClF_3 reactor and cooler, 500 sq ft, 150 psi	5,780	5,737
1 Helium gas recirculation blower, ~5 hp	2,250	
1 45 Percent KOH storage tank, 500 gal	865	3328
1 45 Percent KOH transfer pump	200	
Delivered equipment	$17,095	$10,537
Installation, 0.14 x D. E.	2,393	
Installed equipment	$19,488	
Piping, 1.5 x I. E.	29,232	
Equipment and piping	$48,710	
Instrument installation and piping, 1.39 x 1.67 x D. E.		24,446
Installed instrumentation	34,983	$34,983
2 Remote samplers (aqueous)	6,000	
Equipment and piping, subtotal	$89,693	
Total equipment and piping	$714,300	

7.2.4 UF_6 Distillation

Equipment in cells	Item Cost	Instrumentation Cost
2 UF_6 batch stills, 700 gal, 10 in. diam by 16-ft-high packed tower	$ 42,000	
2 UF_6 condensers, 100 sq ft	19,200	$ 27,038
2 UF_6 sample tanks, 400 gal	18,800	
1 Light-cut tank, 150 gal	4,300	8,297
2 Light-cut recycle pumps, Lapp	6,000	8,150
2 UF_6 cold traps, 150 sq ft	26,000	6,600
2 $CaSO_4$-UF_6 chemical traps	8,000	9,292
1 UF_6 condenser, 5 sq ft	1,500	4,475
1 UF_6 product tank, 1000 gal	15,000	8,053
1 UF_6 recycle pump, Lapp	7,000	2,000
1 Safety tank, 200 cu ft	21,000	3,125
Total delivered equipment	$168,800	$ 77,030
Installation, 0.14 x D. E.	23,632	
Installed equipment	$192,432	
Piping, 2.0 x I. E.	384,864	
	$577,296	
Instrument installation and piping, 1.5 x 1.67 x D. E.		192,960
Installed instrumentation	269,990	$269,990
4 Remote samplers (dry)	36,000	
Total equipment and piping	$883,300	

7.2.5 Plutonium Hydrolysis and Feed Preparation

"Dry" equipment in cells	Item Cost	Instrumentation Cost
2 Plutonium-compound hydrolysis tanks, 100 gal	$ 8,000	$20,211[a]
1 UF_6 condenser, 5 sq ft	3,000	
1 Safety tank, 200 cu ft	21,000	3,125
Delivered equipment	$ 32,000	$23,336
Installation, 0.14 x D. E.	4,480	
Installed equipment	$ 36,480	
Piping, 2.0 x I. E.	72,960	
Equipment and piping	$109,440	
Instrument installation and piping, 1.5 x 1.67 x D. E.		58,457
Installed instrumentation	81,793	$81,793
"Dry" equipment in cell, subtotal	$191,233	
"Wet" equipment in cells		
1 Off-gas condenser, 30 sq ft	$ 1,100	$ 1,248
1 Reflux condenser, 10 sq ft	920	
1 Plutonium solution receiver tank, 100 gal	1,550	2,120
1 Silver reactor for iodine removal, electrically heated	8,000	3,020
1 Plutonium solution storage tank, 300 gal	3,750	1,958
2 Feed preparation tanks, 200 gal	5,500	4,495
2 Agitators, 1/2 hp	4,000	
1 Condensate tank, 25 gal	850	1,116

[a] Includes process valves.

	Item Cost	Instrumentation Cost
4 Reflux condensers, 20 sq ft	$ 4,000	$ 1,250
1 Feed storage tank, 300 gal	3,750	1,958
Subtotal	$ 33,420	$17,165
Equipment outside cells		
1 Hydrolysis solution make-up tank, 75 gal	850	530
1 Agitator, 1/4 hp	420	
1 Feed preparation solution make-up tank, 75 gal	850	530
1 Agitator, 1/4 hp	420	
1 $Al(NO_3)_3$ solution make-up tank, 250 gal	1,660	500
1 Agitator, 2 hp	1,280	
1 Transfer pump	550	
1 Solution filter	2,280	30
1 $Al(NO_3)_3$ solution storage tank, 500 gal	2,100	160
Subtotal	$ 10,410	$ 1,750
Delivered equipment total	$ 43,830	$18,915
Installation, 0.14 x D. E.	6,136	
Installed equipment	$ 49,966	
Piping, 1.5 x I. E.	74,949	
Equipment and piping	$124,915	
Instrument installation and piping, 1.39 x 1.67 x D. E.		$43,883
Installed instrumentation	62,798	$62,798
6 Remote samplers (aqueous)	18,000	
"Wet" equipment subtotal	$205,700	
Total cost of plutonium-compound hydrolysis and feed preparation system	$396,900	

	Item Cost	Instrumentation Cost
7.2.6 First and Second Cycle Extraction		
Equipment in cells		
2 First cycle feed pumps, Lapp	$14,000	$ 3,053
1 First cycle extraction column, 1-1/2 in. diam by 24 ft high, pulsed, with accessories	6,000	3,841
1 First cycle stripping column, 1-1/2 in. diam by 20 ft high, pulsed, with accessories	6,000	3,359
2 Pulse generators, Lapp	14,000	
1 Second cycle feed adjustment tank, 6 gal	1,200	2,060
1 Adjustment tank agitator	1,000	
1 Adjustment tank condenser, 1 sq ft	100	208
1 Feed cooler, 1/2 sq ft	75	208
1 Off-gas spray trap	500	
2 Second cycle feed pumps	6,000	3,053
1 Second cycle extraction column, 3/4 in. diam by 20 ft high, pulsed, with accessories	4,000	2,507
1 Second cycle stripping column, 1-1/2 in. diam by 12 ft high, pulsed, with accessories	4,000	2,507
1 Product storage tank, 15 gal	3,000	1,650
1 Product unloading hood	5,000	
Cell equipment, subtotal	$64,875	$22,446

Equipment outside cells	Item Cost	Instrumentation Cost
1 First cycle scrub feed tank, 75 gal	$ 850	$ 610
1 First cycle strip feed tank, 75 gal	850	
2 Feed pumps, Milton Roy	2,440	1,050
1 Second cycle acid addition tank, 50 gal	700	358
1 Second cycle acid pump, Milton Roy	1,220	525
1 Scrub makeup storage tank, 150 gal	1,174	450
1 Agitator	420	
1 Transfer pump	550	
1 Scrub filter	510	30
1 Second cycle scrub feed tank, 30 gal	560	610
1 Second cycle strip feed tank, 30 gal	560	
2 Feed pumps, Milton Roy	1,500	1,050
1 Second cycle strip makeup head tank, 30 gal	750	80
1 Agitator	420	
1 Transfer pump	610	
1 Filter	510	30
Equipment outside cells, subtotal	$13,624	$ 4,793
Total delivered equipment	$78,499	$27,239
Installation, 0.14 x D. E.	10,990	
Installed equipment	$89,489	
Piping, 1.5 x I. E.	134,234	
Equipment and piping	$223,723	

	Item Cost	Instrumentation Cost
Instrument installation and piping, 1.39 x 1.67 x D. E.		$63,195
Installed instrumentation	$ 90,434	$90,434
7 Remote samplers (aqueous)	21,000	
Total cost of extraction equipment	$335,200	

7.2.7 Solvent Recovery

Equipment in cells

1 First cycle solvent recovery column, 1-1/2 in. diam by 8 ft high, pulsed, with accessories	$ 3,000	$ 3,189
1 Second cycle solvent recovery column, 1 in. diam by 8 ft high, pulsed, with accessories	3,000	3,189
2 Solvent clarification centrifuges	20,000	4,200
2 Pulse generators, Lapp	14,000	
2 First cycle solvent feed tanks, 85 gal	2,800	710
2 Second cycle solvent feed tanks, 45 gal	2,000	710
1 Solvent waste catch tank, 100 gal	1,500	1,027
2 First cycle solvent feed pumps, Lapp	6,000	3,053
2 First cycle solvent strip feed pumps, Lapp	6,000	3,053
2 Second cycle solvent feed pumps, Lapp	6,000	3,053
Cell equipment, subtotal	$64,300	$22,184

Equipment outside cells

1 First cycle solvent wash feed tank, 150 gal	$ 312	$ 80
1 Second cycle solvent wash feed tank, 10 gal	117	80
2 Solvent wash feed pumps, Milton Roy	2,220	1,254

	Item Cost	Instrumentation Cost
1 Na_2CO_3 solvent wash makeup head tank, 200 gal	$ 713	$ 450
1 Agitator	486	
1 Transfer pump	540	
1 Filter	510	30
1 Diluent pretreatment and solvent makeup tank, 100 gal	1,860	438
1 Agitator	553	
1 Transfer pump	540	
1 Filter	510	30
Equipment outside cells, subtotal	$ 8,361	$ 2,362
Total delivered equipment	$ 72,661	$24,546
Installation, 0.14 x D. E.	10,173	
Installed equipment	$ 82,834	
Piping, 1.5 x I. E.	124,251	
Equipment and piping	$207,085	
Instrument installation and piping, 1.39 x 1.67 x D. E.		56,947
Installed instrumentation	81,493	$81,493
5 Remote samplers	15,000	
Total cost of solvent recovery system	$303,600	

7.2.8 Extraction Waste Collection, Neutralization, and Reworking

Equipment in cells

1 First cycle waste collection tank, 200 gal	$ 2,750	$ 3,265
1 Second cycle waste collection tank, 50 gal	1,200	1,090

	Item Cost	Instrumentation Cost
1 First and second cycle waste neutralizer, 500 gal	$ 6,000	$ 2,074
1 Agitator, 10 hp	4,000	
1 Rework evaporator, 500 gal	6,000	2,596
2 Condensers, 20 sq ft	2,000	
1 Product recycle tank, miscellaneous wastes, 30 gal	945	1,970
Equipment in cells, subtotal	$22,895	$10,995
Equipment outside cells		
1 50 percent NaOH metering tank, 100 gal	245	80
1 Transfer pump	200	
Equipment outside cells, subtotal	$ 445	$ 80
Delivered equipment	$23,340	$11,075
Installation, 0.14 x D. E.	3,268	
Installed equipment	$26,608	
Piping, 1.5 x I. E.	39,912	
Equipment and piping	$66,520	
Instrument installation and piping, 1.39 x 1.67 x D. E.		25,694
Installed instrumentation	36,769	$36,769
5 Remote samplers	15,000	
Total cost of waste-handling system	$118,300	

	Item Cost	Instrumentation Cost
7.2.9 General Nonradioactive Chemical Facilities		
Equipment item		
1 50 percent NaOH storage tank, 5,000 gal	$ 3,000	$ 450
1 70 percent HNO_3 storage tank, 1,000 gal	4,000	
2 Transfer pumps	1,080	
1 Ferrous sulfamate head tank, 50 gal	700	80
1 $NaNO_2$ solution makeup tank, 50 gal	900	500
1 Agitator	564	
1 Transfer pump	540	
1 Filter	2,280	30
1 $NaNO_2$ solution head tank, 100 gal	950	80
Delivered equipment	$14,014	$ 1,140
Installation, 0.14 x D. E.	1,962	
Installed equipment	$15,976	
Piping, 1.5 x I. E.	23,964	
Equipment and piping	$39,940	
Instrument installation and piping, 1.39 x 1.67 x D. E.		2,645
Installed instrumentation	3,785	$ 3,785
Total cost of process equipment	$43,700	
Fork truck	4,000	
Total cost of general nonradioactive chemicals facilities	$47,700	

7.3 General Plant Auxiliary Facilities

7.3.1 Low-Temperature Refrigeration System

10 ton (estimated size), -76°F (-60°C)

refrigeration plant (installed cost)[29]	$ 72,000	
Piping, 0.6 x I. C.	43,200	
	$115,200	
Building, 22,500 cu ft at $0.6/cu ft[30]	13,500	
Total cost of facility		$129,000

7.3.2 General Utilities: Steam, Electricity, Compressed Air, and Water

Steam Generation

Process steam (estimate)	10,000 lb/hr
Heating and ventilating (based on air flow and reference 7)	4,000 lb/hr
Peak load allowance	4,000 lb/hr
Total capacity	18,000 or 20,000 lb/hr

$$\$550,000 \left(\frac{20,000}{80,000}\right)^{0.6\,(a)} \left(\frac{600}{509}\right)^{(b)} = \$282,000$$

(a) Reference 32.
(b) Cost index correction.[31]

Electricity

Electrical distribution (assumed to be same as in reference 7 owing to rather large probable electrical usage in volatility portion of plant)	$160,000
Emergency electrical services (assumed to be same as in reference 7)	140,000
	$300,000

Compressed Air

500 scfm (estimated) at $90/scfm[28] $ 45,000

Water

$$\$140,000^{(a)} \left(\frac{1,200,000 \text{ gal/day (estimated)}}{2,160,000 \text{ gal/day}^{(a)}}\right)^{0.6} = \$98,000$$

Total utilities $725,000

[a] Reference 28.

7.3.3 Gaseous Waste Disposal

The following general process considerations apply to the plant gaseous waste disposal systems: (1) The off-gas from fluorine-containing process cells will be scrubbed prior to disposal from the stack; (2) scrubbed vessel off-gas (from silver reactor and vessel off-gas scrubber) will be filtered prior to disposal from the stack.

Fluorine-process-cell off-gas scrubber (estimated)	$50,000
Disposal stack cost: $\$175,000^{(a)} \left(\frac{10,000 \text{ cfm}^{(b)}}{200,000 \text{ cfm}^{(a)}}\right)^{0.6} =$	29,000
Total cost	$79,000

[a] ICPP data.
[b] Estimated maximum air flow.

7.3.4 High-Activity Liquid-Waste Storage

Tabulated below are the anticipated plant high-activity-level waste volumes:

F_2 off-gas scrubber (1,092 lb 45 percent KOH)	90 gal/day
Coating removal waste (concentrated in tank)	232 gal/day
Extraction waste (concentrated in tank)	146 gal/day
Concentrated decontamination and laboratory wastes (estimated)	120 gal/day
Storage volume required	588 gal/day

588 gal/day x 365 days/year = 214,620 gal/year

The waste storage will use three 750,000-gal underground storage tanks, which will provide 10.5 years' storage for all high-activity-level plant wastes. This system is the same size and provides the same total storage time as the waste system reported in reference 7. In actual practice, only one tank would probably be installed initially because of the low rate of filling.

3 Waste tanks, 750,000 gal each at $0.5/gal installed[7]	$1,125,000
Transfer tanks, condensers, etc.[7]	98,000
Total liquid waste storage cost	$1,223,000

7.3.5 Miscellaneous Waste Facilities

Laboratory waste evaporation[7]	$ 228,000
Retention basin for service water[7]	
$77,000 $\left(\frac{1,200,000 \text{ gal/day estimated}}{2,000,000 \text{ gal/day}^{(a)}}\right)^{0.6}$ =	56,000
Burial ground[7]	50,000
Burning ground[7]	25,000
Decontamination facility[7]	50,000
Waste lagoon[7]	25,000
Total miscellaneous waste facilities cost	$ 434,000
Total general plant auxiliary facilities	$2,590,000

[a]Reference 7.

7.4 Process Building

Concrete, 4,710 cu yd at $100/cu yd[a]	$ 471,000
Excavation and backfill (10 percent of concrete cost)	47,100
Operating, sampling, and crane bays, steel and transite, 170,000 cu ft at $0.6/cu ft[30]	102,000

[a]Idaho Chemical Processing Plant.

Heating and ventilating $1/cfm,[a] 10 changes/hr in "wet" cells, 1 change/hr in "dry" cells	$ 5,700
Stainless steel lining, all surfaces in "dry" cells and F_2 cell off-gas tunnel, floors and 6 ft of walls in "wet" cells, floors and 2 ft of walls in hot pipe tunnel, 14,700 sq ft at $13/sq ft[a]	191,100
Electrical services (assumed to be same as ICPP)	400,000
Special equipment (estimated to be 50 percent greater than ICPP)	1,500,000
Painting	50,000
Maintenance crane, 25 ton	50,000
Freight elevator	30,000
Total cost of process building	$2,847,000

[a]Idaho Chemical Processing Plant.

7.5 Laboratory Building

If the analogy that a sampler for the high-pressure fluorine-containing portion of the plant will be at least three times as expensive as one for aqueous solutions is extended to the laboratory building analytical requirements, it appears that the laboratory will be at least equivalent in cost to that given in the Purex study.[7]

Estimated cost of laboratory building	$1,980,000

7.6 Site Development and General Buildings

This cost includes selection and preparation of sites, yard piping, electrical distribution, fences, roads, railroad spur, warehouses, office buildings, etc., as required for a completely self-sufficient plant. The cost of this item is reported to range from 20 to 25 percent of the total plant investment[33] and from 9 to 28 percent of the installed equipment cost. This plant is relatively small in size, has very expensive equipment and is the locale of some extremely hazardous operations; therefore the site development costs are estimated to be only 15 percent of the total plant cost.

Site development and general facilities, 15 percent of $13,920,000 (excluding land)	$2,088,000

8.0 OPERATING COST DETAILS

In this section all operating costs for the estimated plant are summarized in detail.

8.1 Process Chemicals, Consumption and Cost

Chemical	lb/year	$/lb	$/year
70% HNO_3	251,100 (100% basis)	0.25	62,780
50% NaOH	923,800	0.03	27,720
45% KOH	398,400[a]	0.043	17,130
$NaNO_3$	582,180	0.03	17,470
$NaNO_2$	3,250	0.10	330
Na_2CO_3	4,640	0.03	140
$Al(NO_3)_3 \cdot 9H_2O$	109,500	0.12	13,140
96.5% H_2SO_4	560	0.20	110
30% $Fe(NH_2SO_3)_2$	21,000	1.00[b]	21,000
Tributyl phosphate	1,060[c]	0.64	680
Amsco 125-82	1,860[c]	0.25	470
Chlorine gas	33,400	0.09	3,000
Total annual chemical cost			$164,000

[a] Estimated consumption to neutralize F_2 and ClF loss (3%) from the plant recombination system.

[b] Estimated price; chemical is not listed in usual price sources.

[c] Estimated consumption based on a loss of 1 gal of solvent per day.

8.2 Fluorine Costs

The operating cost for producing fluorine gas containing about 4 mole percent HF is quoted[10] as follows for a typical month at K-25:

	$/lb
Materials (chemicals, repairs)	0.3251
Labor (direct maintenance)	0.1542
Work materials (electricity, steam, water, etc.)	0.0427
Plant expenses (overhead, etc.)	0.2556
	0.7776 or $0.78/lb

Using the installed cost of $2,282,000 for a 30-cell plant, based on Paducah data,[9] and amortizing this plant in 6-2/3 years, the capital cost per pound of fluorine (at 4.6 lb/hr/cell) is $0.28. The total cost of fluorine will be $1.06 per pound. Thus, since the total annual fluorine production is 1,208,000 lb, the total fluorine production operating cost will be $942,200 per year.

8.3 Annual Operating Cost Details

Item	Cost	% of Total
Process chemicals	$164,000	5.4
Operating labor (exclusive of fluorine plant), 20 men/shift at $2/hr[25]	350,400	11.5
Maintenance labor (exclusive of fluorine plant), 15 men/shift at $2/hr[25]	262,800	8.6
Supervision, 50% of O.L. + 25% of M.L.[25]	240,900	7.9
Operating supplies, 10% of O.L. + 10% of M.L.[25]	61,300	2.0
Electricity (estimated load 1,000 kw) at $0.01/kwh[25]	87,600	2.9
Steam (estimated load 340,000 lb/day) at $1/1,000 lb[25]	124,100	4.1
Water (estimated usage 1,000,000 gal/day) at $0.1/1,000 gal[25]	36,500	1.2
Compressed air (estimated load 250 cfm) at $0.05/1,000 cu ft[34]	6,600	0.2

	Cost	% of Total
Inert gas (estimated nitrogen usage 400 cfh) at $0.55/100 cu ft[34]	19,300	0.6
Refrigeration plant (10 tons estimated load) at $2.80/ton/day (extrapolation of data in reference 25)	10,200	0.3
Control laboratory (estimated)[7]	500,000	16.4
Maintenance material, 100% of M.L. plus maintenance supervision[25]	327,500	10.8
Overhead, 100% of O.L. + M.L. + supervision	854,100	28.1
Total	$3,045,300	100.0
Fluorine plant, 137.9 lb/hr at $0.78/lb[10]	942,200	
Annual operating cost	$3,988,000	

9.0 NOTES ON THE COST OF BrF_3-BrF_5 VOLATILITY PROCESSES

9.1 Cost Summary of the BrF_3-BrF_5 Processes

Because of the similarity between the ORNL ClF_3 process and the BrF_3-BrF_5 processes of Argonne and Brookhaven National Laboratories,[35, 36] it was deemed desirable to incorporate a brief study of the costs of the latter process. The total fixed investment is estimated to be $33,003,000 for a plant processing at the same rate as the ClF_3 plant and the annual cost is as follows:

Cost	Total	Per g of Pu
Fixed investment	$ 5,281,000	$ 8.77
Operating cost	3,988,000	6.62
Working capital	7,000	0.01
SF inventory	7,056,000	11.72
	$16,332,000	$27.1

9.2 Process and Plant Description

The BrF_3-BrF_5 process is similar to the ClF_3 process in that uranium metal is dissolved in BrF_3 or BrF_5, or a mixture of the two, and the uranium hexafluoride is separated from the remaining interhalogens by distillation. The plutonium recovery system is identical to the ClF_3 system. Development work is being done on the distillation operations at Argonne National Laboratory and on continuous dissolution at Brookhaven National Laboratory. The flowsheet[37] selected for the cost study incorporates continuous dissolution of the slugs and continuous separation of BrF_3 from BrF_5-UF_6 and of the UF_6 from the BrF_5. Batch hydrolysis and solvent extraction are used for plutonium recovery. The Brookhaven continuous dissolver with the pump for recirculating the fluorinating mixture through a heat exchanger was not used since the cost and operating problems of the pump appear formidable and the large holdup inventory of liquid fluorinating mixture may be undesirable. Instead, a dissolver type similar to that for the ClF_3 process was envisioned in which heat is removed by a reflux condenser and the dissolver operates at the boiling point of the mixture. Literature data on the fluorination of BrF_3 to BrF_5 were extremely meager, but the few data available indicated that the process was somewhat simpler than that for preparation of ClF_3. For cost study purposes, it was assumed that the equipment costs for the BrF_3-to-BrF_5 conversion were two-thirds of the cost of the ClF_3 preparation and that the fluorine utilization in the reaction is 97 percent. Other process mechanical features are similar to those of the ClF_3 process in that high-quality fabrication, double-tube-wall heat exchangers, large piping factors, etc., were assumed mandatory.

The process building is 5 ft shorter than the ClF_3 process building because of the reduced length of cell 3 made possible by the small continuous distillation units used for the BrF_3-BrF_5 process. Other building features are unchanged.

9.3 Cost Details

9.3.1 Equipment for the Volatility Portion of the Plant

Item	Cost
1 Slug dissolver, 175 gal, 15 ft high	$12,600
1 Emergency dump tank, 150 gal	5,600
1 Reflux condenser, 150 sq ft	10,400
1 Emergency holdup tank, 100 gal	4,000
4 Cold traps, 150 sq ft	78,000
2 UF_6 chemical traps ($CaSO_4$)	8,000

Item	Cost
3 Off-gas heaters	3,000
2 Flash-hydrolysis tanks, 120 gal	14,100
1 Flash vapor condenser, 15 sq ft	3,800
1 Flash vapor sump tank, 5 gal	1,500
1 BrF_3 still	53,100
1 UF_6-BrF_5 condenser, 320 sq ft	22,800
1 BrF_3 vaporizer, 15 sq ft	4,800
1 UF_6-BrF_5 still	20,100
1 BrF_5 condenser, 100 sq ft	9,600
1 BrF_5 surge tank, 5 gal	1,500
2 Cold trap sump tanks, 30 gal	3,200
8 Recycle pumps, Lapp	24,000
1 UF_6 product tank, 1000 gal	15,000
2 UF_6 sample tanks, 400 gal	18,800
3 Safety tanks, 200 cu ft	63,000
Total delivered equipment	$ 376,900
Installation, 0.14 x D. E.	52,800
Installed equipment	$ 429,700
Piping, 2.0 x I. E.	859,400
Equipment and piping	$1,289,100
Instrumentation, 0.347[a] x E. and P.	447,300
	$1,736,400

[a] Factor 0.347 developed from the ClF_3 process study.

$BrF_3 \rightarrow BrF_5$ conversion,	
2/3 ($624,633 - $18,000[a])	$ 404,600
13 samplers for system	117,000
Total	$2,258,000

[a] $18,000 is for samplers.

9.3.2 Other Process Equipment[b]

Fluorine compression and purification	$ 426,000
Slug unloading, jacket removal, and charging equipment	501,100
Off-gas scrubbers	89,700
"Wet" equipment for plutonium compound hydrolysis and feed preparation	205,700
First and second cycle extraction	335,200
Solvent recovery	303,600
Waste collection, neutralization, and reworking	118,300
Nonradioactive chemical facilities	47,700
	$2,027,000

[b] From ClF_3 process data.

9.3.3 Capital Cost Summary

Volatility equipment	$2,258,000
Other process equipment	2,027,000
Low-temperature refrigeration	129,000
Steam, electricity, air, and water	725,000
Gaseous waste disposal	79,000

Liquid waste storage	$ 1,223,000
Miscellaneous waste facilities	434,000
Process building	2,782,000
Laboratory building	1,980,000
34-Cell fluorine plant	2,282,000
	$13,919,000
Site development, 15% of $13,919,000	2,088,000
Subtotal	$16,007,000
Engineering, design, and inspection, 20% of subtotal	3,201,000
Construction and construction fee, 22% of subtotal, exclusive of fluorine plant	3,020,000
Contingency, 40% of subtotal	6,403,000
Preoperation and startup	3,988,000
Land	384,000
Total fixed investment	$33,003,000
Annual capital cost at 16%	$ 5,281,000

9.3.4 Operating Cost

The same operating cost is assumed for the BrF_3-BrF_5 plant as was developed for the ClF_3 plant. The only readily apparent cost difference is the difference in cost between the chlorine and the bromine that are lost in the plant waste gases. This difference is insignificant in the total operating cost.

10.0 ACKNOWLEDGMENTS

C. E. Schilling, R. E. Leuze, J. T. Long, and C. D. Watson assisted in the preparation of flowsheets and process calculations; various K-25 personnel gave freely of requested cost and fluorine-handling information, and Brookhaven and Argonne National Laboratories personnel contributed BrF_3-BrF_5 process data and much information on interhalogen handling techniques.

11.0 REFERENCES

1. R. P. Levey, "Preliminary Survey of Dry Fluoride Separations Processes," KDD-84, Memo 17 (May 2, 1949).

2. L. A. Barry, G. H. Montillon, and R. Van Winkle, "Fluorination of Uranium Pile Slugs with Elemental Fluorine," K-548 (Dec. 30, 1949).

3. R. E. Leuze, "Dry Fluoride Process Status Report," ORNL-980 (March 27, 1951).

4. H. H. Hyman and J. J. Katz, "The Argonne Fluoride Volatility Process; Status as of December 31, 1951," ANL-4709 (Feb. 10, 1952).

5. R. A. Gustison, "Pilot Plant Studies of the Recovery and Decontamination of Hanford-Irradiated Uranium by Chlorine Trifluoride (CTF) Process," K-519 (June 18, 1952).

6. R. E. Leed and E. E. Sinclair, "Report of Chlorine Trifluoride Separation Process Conference by USAEC," ORO-23517 (Sept. 26, 1952).

7. H. L. Hull and H. R. Zeitlin, "A Design and Cost Estimate of a Purex Plant," ORNL-1558 (March 15, 1954).

8. J. Dykstra, K-25 plant, personal communication, Nov. 17, 1953.

9. J. L. Waters, K-25 plant, personal communication, Oct. 1, 1953.

10. B. H. Thompson, K-25 plant, personal communication, Oct. 16, 1953.

11. R. C. Downing, "Purification and Compression of Fluorine," Chap. 8 of "Preparation, Properties, and Technology of Fluorine and Organic Fluoro Compounds," National Nuclear Energy Series, Div. VII, Vol. 1, McGraw-Hill Book Company, Inc., New York, 1951.

12. "Redox Technical Manual," HW-18700 (July 10, 1951).

13. J. T. Long, ORNL, personal communication, November 1953.

14. R. E. Leuze, "CTF Process Quarterly Report," ORNL CF-53-5-231 (May 28, 1953).

15. S. Bernstein, W. E. Powell, and H. A. Bernhardt, "Preparation of Chlorine Trifluoride," K-649 (Aug. 14, 1950).

16. Joseph Simons (ed.), "Fluorine Chemistry," New York: Academic Press, 1950.

17. Luft, "Thermodynamic Functions of Fluorine and Some of Its Compounds," Report ERDE-2/M/50 (July 1950).

18. W. J. Carter, M. A. Howick, J. R. Burston, and R. Y. Eagers, "German Fluorine and Fluorine Industry," British Intelligence Objective Subcommittee (NP-337) (BIOS-FR-1595).

19. J. R. Flanary and E. B. Sheldon, "Quarterly Report: Plutonium Recovery from the CTF Process Residue," ORNL CF-52-11-98 (Nov. 14, 1952).

20. S. Lawroski and C. E. Stevenson, "Chemical Engineering Division Summary Report, July, August, and September, 1953," ANL-5169 (Dec. 1, 1953).

21. Meeting of E. L. Nicholson and J. T. Long with K-25 personnel to discuss the volatility flowsheet, Sept. 24, 1953.

22. "Feed Manufacture of Part G, Research and Development, K-25 Quarterly Report For Third Fiscal Quarter," KC-155, Part 3 (May 3, 1954).

23. D. O. Darby and J. M. Chandler, "Terminal Report for the ORNL Pilot Plant Investigation of the Purex Process," ORNL-1519 (Feb. 8, 1954).

24. W. T. Nichols, "Capital Cost Estimating," Ind. Eng. Chem., 43: 2295 (1951).

25. C. H. Chilton, "Cost Estimating Simplified," Chem. Eng. 58 (June): 108 (1951).

26. F. R. Bruce, ORNL, personal communication, December 1953.

27. H. J. Lang, "Simplified Approach to Preliminary Cost Estimates," Chem. Eng., 55 (June): 112 (1948).

28. G. W. T. Kearsley, "Analysis of Construction Costs, Service Building, Idaho Chemical Processing Plant," ORNL CF-52-9-31 (Sept. 4, 1952).

29. C. H. Chilton, "Cost Data Correlated," Chem. Eng., 56 (June): 97 (1949).

30. W. L. Nelson, "Cost of Buildings," Article No. 22 in "Cost-imating," a publication of Oil and Gas Journal.

31. P. Jandrisevits, "Preliminary Estimating by Selective Unit Costs," Ind. Eng. Chem., 43: 2299 (1951).

32. R. Williams, Jr., " 'Six-Tenths Factor' Aids in Approximating Costs," Chem. Eng., 54 (December): 124 (1947).

33. O. E. Sieder, "Considerations in Industrial Plant Site Cost," Chem. Eng., 54 (May): 117 (1947).

34. E. C. Dybdal, "Engineering and Economic Evaluation of Projects," Chem. Eng. Prog., 46: 57 (1950).

35. H. H. Hyman and J. J. Katz, "The Argonne Fluoride-Volatility Process for the Separation of Uranium," Reactor Sci. Technol. 2 (4) 9-34 (December 1952). (TID-2004).

36. W. R. Page, C. J. Raseman, E. I. Goodman, and C. H. Scarlett, "A Continuous Flow Pilot Plant for the Separation of Bromine-Fluorine Compounds and Light End Fission Product Fluorides from Uranium Hexafluoride," BNL-174 (March 1952).

37. E. I. Goodman and G. Strickland, personal communication, Brookhaven National Laboratory, and Dwg. ME 22-0-4, "Volatility Plant Flowsheet," preliminary.