UNCLASSIFIED

CENTRAL RESEARCH LIBRARY
DOCUMENT COLLECTION

MARTIN MARIETTA ENERGY SYSTEMS LIBRARIES
3 4456 0349794 5

ORNL-1807
Physics
cy. 4

A SINGLE-CRYSTAL ADAPTER FOR THE NORELCO WIDE-RANGE DIFFRACTOMETER

R. J. Fox
F. A. Sherrill
M. C. Wittels

CENTRAL RESEARCH LIBRARY
DOCUMENT COLLECTION

LIBRARY LOAN COPY

DO NOT TRANSFER TO ANOTHER PERSON

If you wish someone else to see this document, send in name with document and the library will arrange a loan.

OAK RIDGE NATIONAL LABORATORY
OPERATED BY
CARBIDE AND CARBON CHEMICALS COMPANY
A DIVISION OF UNION CARBIDE AND CARBON CORPORATION
UCC
POST OFFICE BOX P
OAK RIDGE, TENNESSEE

UNCLASSIFIED

ORNL-1807
Physics
Copy No. 4

Contract No. W-7405-eng-26

SOLID STATE DIVISION

A SINGLE-CRYSTAL ADAPTER FOR THE NORELCO WIDE-RANGE DIFFRACTOMETER

R. J. Fox, F. A. Sherrill, and M. C. Wittels

DATE ISSUED

JAN 6 1955

OAK RIDGE NATIONAL LABORATORY
Operated by
CARBIDE AND CARBON CHEMICALS COMPANY
A Division of Union Carbide and Carbon Corporation
Post Office Box P
Oak Ridge, Tennessee

MARTIN MARIETTA ENERGY SYSTEMS LIBRARIES

3 4456 0349794 5

ORNL-1807
Physics

INTERNAL DISTRIBUTION

1. C. E. Center
2. Biology Library
3. Health Physics Library
4-5. Central Research Library
6. Reactor Experimental Engineering Library
7-11. Laboratory Records Department
12. Laboratory Records, ORNL R. C.
13. C. E. Larson
14. L. B. Emlet (K-25)
15. J. P. Murray (Y-12)
16. A. M. Weinberg
17. E. H. Taylor
18. E. D. Shipley
19. D. S. Billington
20. F. C. VonderLage
21. W. H. Jordon
22. C. P. Keim
23. J. A. Lane
24. J. H. Frye, Jr.
25. R. S. Livingston
26. J. A. Swartout
27. S. C. Lind
28. F. L. Culler
29. A. H. Snell
30. A. Hollaender
31. M. T. Kelley
32. G. H. Clewett
33. K. Z. Morgan
34. T. A. Lincoln
35. A. S. Householder
36. C. S. Harrill
37. C. E. Winters
38. D. W. Cardwell
39. E. M. King
40. A. J. Miller
41. J. T. Howe
42. D. D. Cowen
43. R. A. Charpie
44. G. E. Boyd
45. M. J. Skinner
46. R. J. Fox
47. F. A. Sherrill
48-97. M. C. Wittels
98. P. M. Reyling
99. G. C. Williams
100. H. G. MacPherson (consultant)
101. R. L. Sproull (consultant)
102. Harvey Brooks (consultant)
103. ORNL Document Reference Library, Y-12 Branch

EXTERNAL DISTRIBUTION

104. R. N. Little, ANP Project Office, Fort Worth
105. R. F. Bacher, California Institute of Technology
106. Division of Research and Medicine, AEC, ORO
107-360. Given distribution as shown in TID-4500 under Physics category

DISTRIBUTION PAGE TO BE REMOVED IF REPORT IS GIVEN PUBLIC DISTRIBUTION

A SINGLE-CRYSTAL ADAPTER FOR THE NORELCO WIDE-RANGE DIFFRACTOMETER

R. J. Fox F. A. Sherrill
M. C. Wittels

Introduction

The Norelco wide-range diffractometer was designed primarily for the study of polycrystalline materials with random orientation, but it has become desirable to extend its use to the study of single crystals larger than those which can be examined by precession and Weissenberg methods. The adaptation should extend the range of the instrument without impairing its original features. These two conditions have been fulfilled with an adapter. The only change necessary in the diffractometer was to drill a single 5/32-in. hole in the end of the bronze bearing. The adapter may be placed on or removed from the Norelco instrument (see Fig. 1) in less than 5 min with complete ease of handling. Applications of this instrument in various phases of single-crystal study will be presented in the following discussion.

Description and Alignment

Crystals up to 1 in. in diameter and up to 3/8-in. thick are mounted with Cenco universal red wax so that a flat face is co-planar with the top surface of the ring. This ring (Fig. 2) is then placed with its outer edge in contact with three V-grooved steel rollers equally spaced around the ring and co-planar with it. One of the rollers is the driver for the ring rotation, and the other two are spring-loaded idlers. This six-contact point suspension (two contact points per roller) locates the top face of the steel ring and the specimen face so as to contain the major axis of the diffractometer. Power for the ring rotation is brought in to the driver roller through a shaft and gear train from an induction motor at the rear of the unit. The gears can be disengaged when the ring rotation is not required.

In addition to the ring rotation, a synchronous motor drive at the rear of the unit rocks the ring slowly about the conventional axis of the diffractometer through a friction clutch but independently of the normal diffractometer drive. The clutch permits rapid manual adjustment of crystal orientation. In order to avoid backlash in the rocking motion, the driving motor is opposed by a motor of lower torque, which is therefore forced to run backwards. A graduated disk (Figs. 3 and 4) is mounted on the tubular shaft supplying this

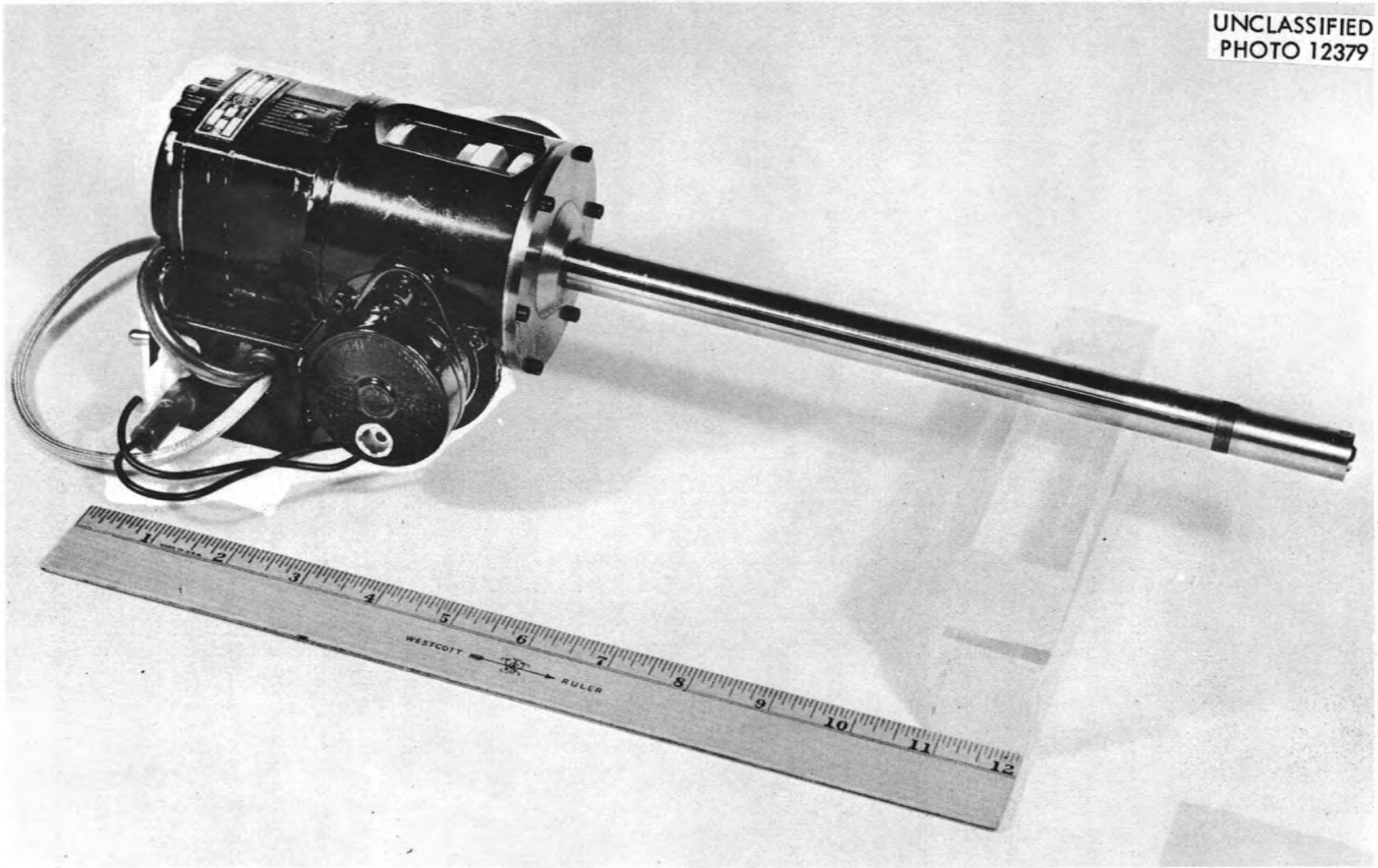

Fig. 1. Spinner Removed from Norelco Diffractometer

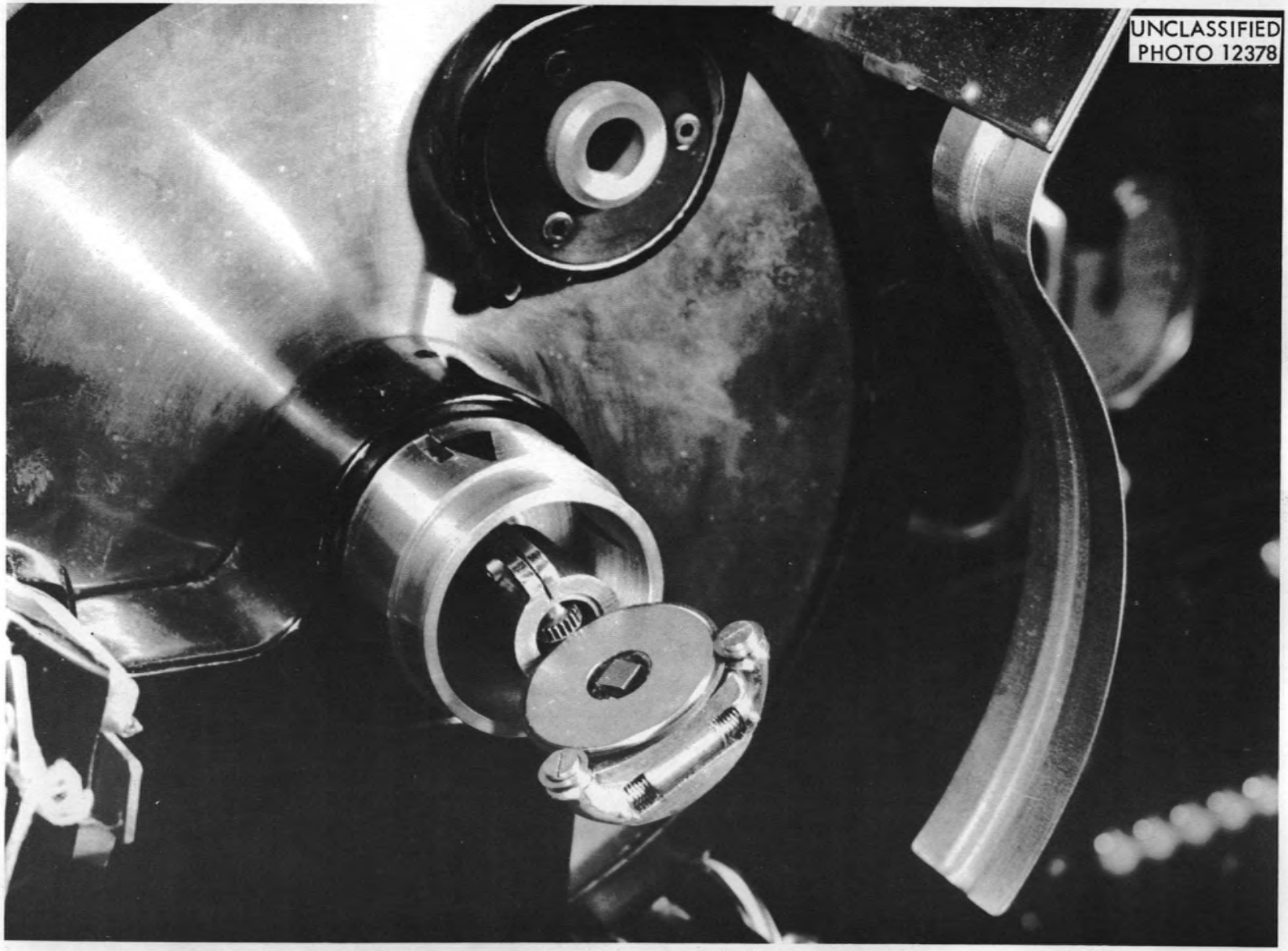

Fig. 2. Crystal Mounting Ring with Specimen in Place

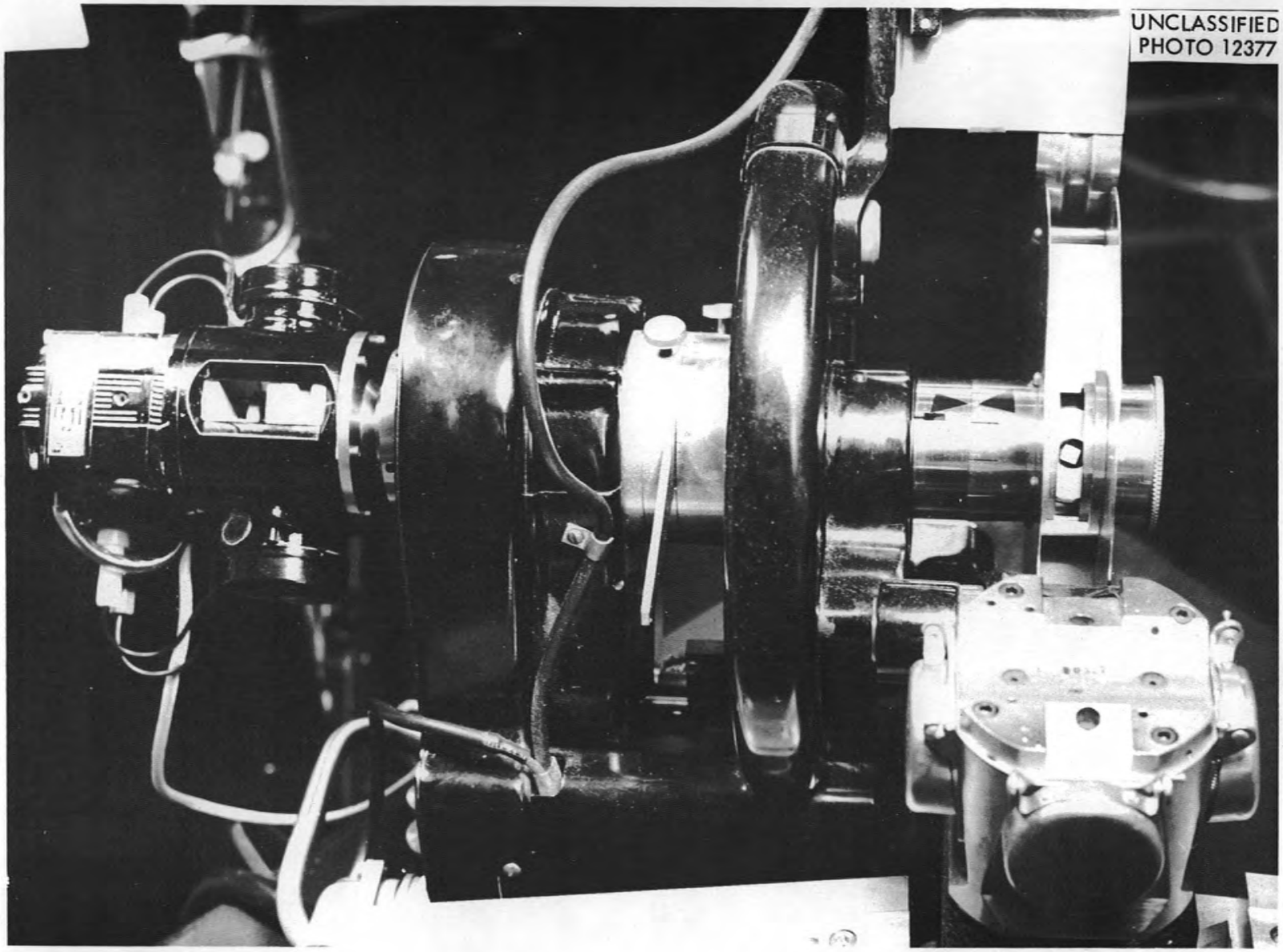

Fig. 3. Spinner in Position on Norelco Diffractometer

UNCLASSIFIED
ORNL-LR-DWG 4125

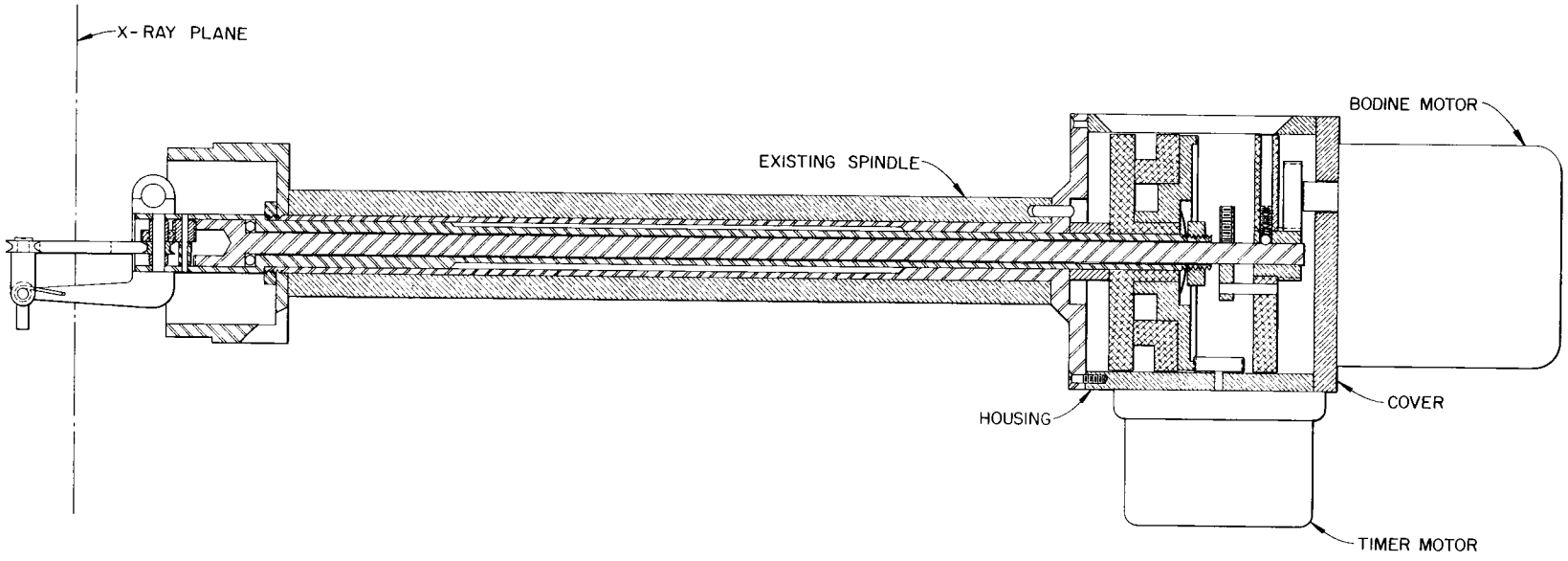

Fig. 4. Crystal Rocker Assembly

rotation and permits the reading of the angular deviation between the crystal surface and the diffracting lattice planes. This angle may be defined as the take-off angle.

As a periodic check on the alignment, lattice parameter measurements of a single crystal having well-established constants is helpful. High-purity silicon was used for this purpose, and a typical plot of the lattice parameter as a function of $\cos^2 \theta$ is shown in Fig. 5. It is assumed that systematic alignment errors are eliminated when a nearly constant relationship can be obtained. Also, the usefulness of the adapter at smaller Bragg angles is enhanced.

Applications

If the angle between the slip planes and pulling direction in, say, a copper single-crystal tensile specimen is desired, a simple orientation analysis is used. If the crystal is properly positioned in the adapter, the 2θ angle of the diffractometer is set to 144.7 deg to receive diffraction from the equivalent (420) planes. The crystal is automatically rocked and spun simultaneously with the crystal surface tilted initially at 72.35 deg, or $1/2(2\theta)$, from its normal position. As a specific rule $1/2(2\theta)$ is always the limiting angle of take-off because any further increase in that angle would result in blocking the diffracted beam. The rocking and spinning motions result in a spiral search for the equivalent (420) reflections as shown on a portion of the standard stereographic net in Fig. 6. The angular traverse between corresponding points on the spiral is only 10 min of arc, sufficiently small so that all possible reflections can be located when the normal diffractometer slits are used.

The stereographic plot in Fig. 6 shows that many planes other than the equivalent (420) will diffract as the crystal moves through a complete spiral, but, since the Geiger counter

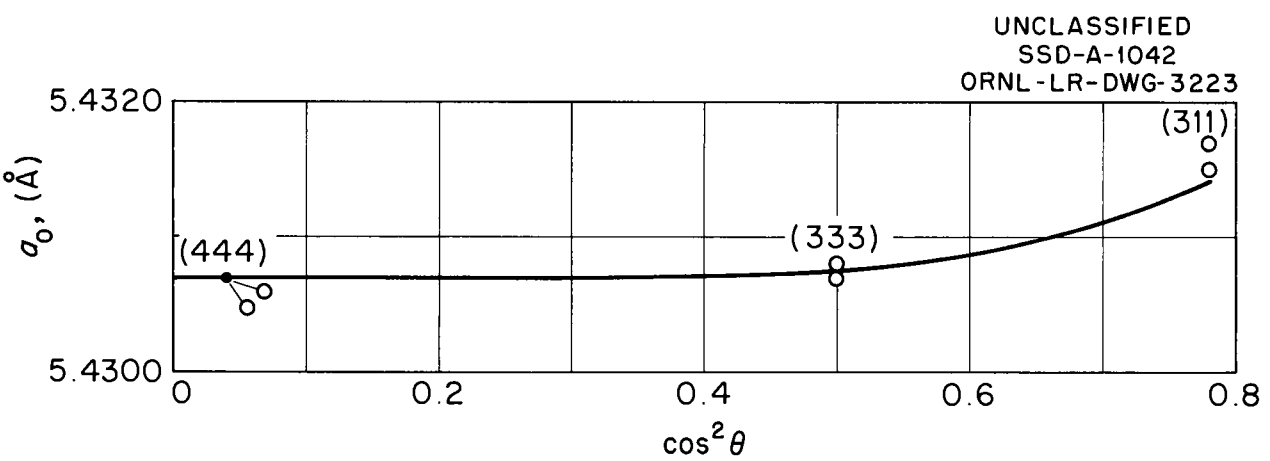

Fig. 5. Lattice Parameters of Single-Crystal Silicon.

UNCLASSIFIED
SSD-A-1033
ORNL-LR-DWG-3026

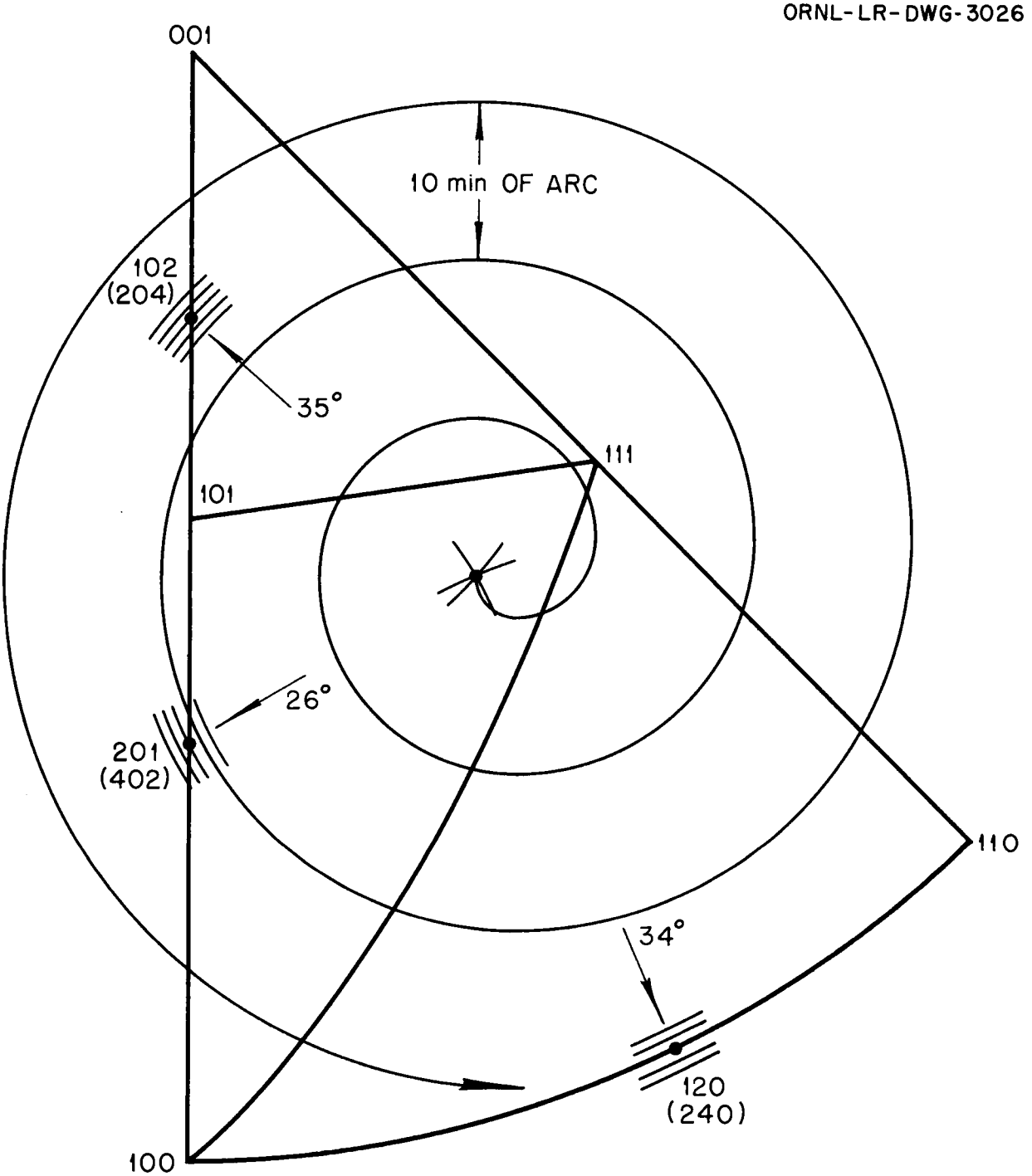

Fig. 6. Portion of Standard Stereographic Net for Cubic Crystals

is set to receive reflection from only the equivalent (420), then reflections from these planes only will be recorded on the chart trace as in Fig. 7. This figure shows equivalent (420) reflections appearing at take-off angles of 35, 34, and 26 deg, respectively. By plotting these angles as arcs in the standard stereographic projection, the normal to the crystal surface is located at their intersection. This normal can usually be found with an accuracy of ±1/2 deg, and this locates the angle between the crystal surface and any lattice plane with fair precision as read from this projection. The unique crystal orientation is then found by noting the exact spin position where the crystal diffracts, and this is usually done manually. Any cubic crystal could be oriented in a similar manner. For example, if lead were the case, 2θ could be set at 123.3 deg and the equivalent (440) planes sought with an initial tilt at 61.6 deg. This technique is particularly useful in cold-worked crystals for which the Laue method fails.

There are two methods of utilizing the adapter in determining lattice parameter and in observing line shapes. The crystal may be rocked, or the diffractometer may be used in the normal manner by first properly orienting the crystal. In both methods the x-ray exit-slit width must be diminished if the take-off angle is not zero. Small slits are inserted because focusing conditions are no longer maintained. In both methods of measurement it has been found that a 0.003-in. exit slit that gives a beam width of 0.040 in. at the sample is ideal. With this arrangement the lines very nearly take on their true shapes even when the take-off angle is large. Also, under these conditions ample diffraction intensity is available.

When the rocking-curve technique is used, the Geiger tube is set at the proper Bragg angle and the take-off angle for diffraction is roughly determined. The spin motion is then manually adjusted to achieve maximum diffraction intensity. Counts are taken with the Geiger tube set at intervals of 0.025 deg, equal to a slit width of 0.003 in. A synchronous

UNCLASSIFIED
SSD-A-1034
ORNL-LR-DWG-3123

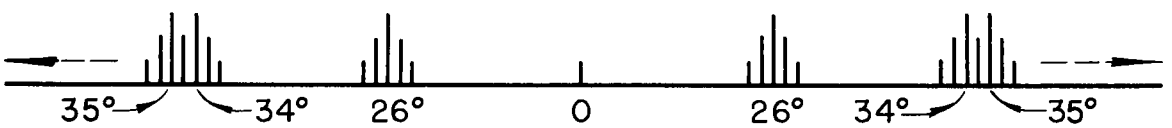

Fig. 7. Chart Trace for (420) Reflections.

rocking motor with a rocking speed of 2.4 deg/min is used, and a fixed-time counting system is employed. Power settings are determined so that at peak diffraction with a scale factor of 16 the counting-rate meter remains on scale. The best fixed time for cold-worked crystals such as copper was found to be about 2 min to reach background level on both sides of peak. By this method a rocking curve of 2θ vs intensity is plotted, and line shapes can be observed and lattice parameters can be determined. Figure 8 shows some rocking curves obtained by this method. This figure indicates how the adapter can be used to study cold-work distortion. Figure 9 is a Laue back-reflection photograph of the same crystal.

A very simple method of observing Bragg reflections is to fix the crystal in the proper position to diffract and then operate the diffractometer in the conventional manner. Unlike the rocking method, this system requires that the reflecting peak position be accurately located, and this is accomplished when the diffraction peak is found by using the spin motion, by using the rocking motion, and by moving the Geiger tube. The correct alignment is attained when maximum diffraction is obtained by the correct positioning of these three variables. It is likely that the peaking process must be repeated in order to achieve the best results.

Under ideal conditions lattice parameters may be measured with a precision of ±0.005% by use of this technique. Table 1 gives some random lattice-parameter measurements of a deformed single crystal of copper elongated 10.9% by tensile extension. Figure 10 is a diffractometer trace of one of the equivalent (420) reflections from this specimen in which the lattice plane was inclined at 21 deg from the crystal surface.

Table 1. Lattice-Parameter Measurements of a Deformed Copper Single Crystal

Test No.	Reflections		
	(420)	(331)	(400)
1	3.6154	3.6157	3.6156
	3.6153	3.6157	3.6156
2	3.6154	3.6157	3.6154
	3.6154	3.6157	3.6154
3	3.6155	3.6154	3.6158
	3.6155	3.6154	3.6158

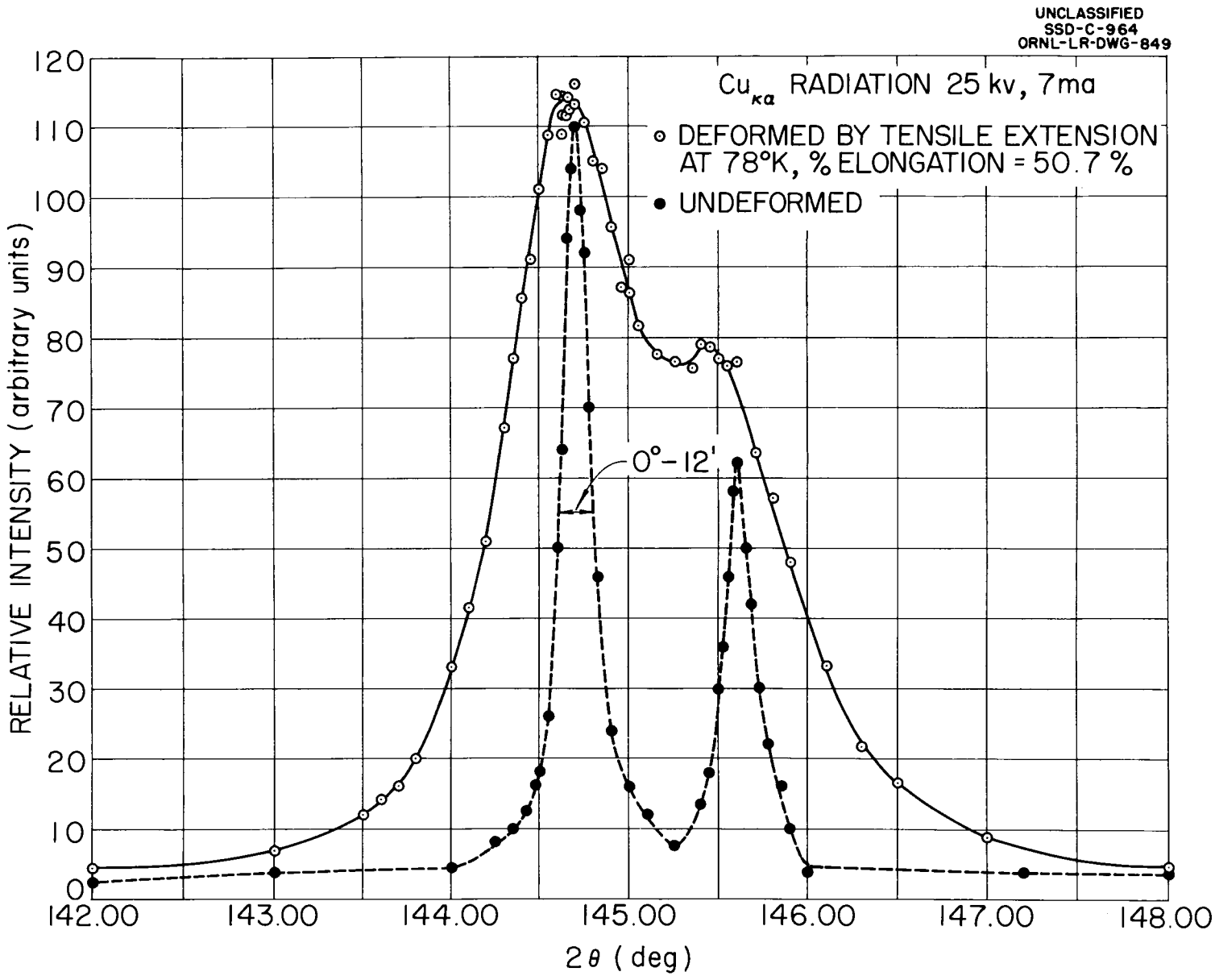

Fig. 8. Rocking Curves of (420) from Copper Single Crystals

Fig. 9. Laue Back-Reflection Photograph of a Copper Single Crystal after Elongation.

Figure 11 shows the (733) reflection from a single crystal of indium antimonide with the lattice plane inclined at 21 deg to the crystal surface. It should be noted that the half width of the peak is only 0 to 15 min despite the large Bragg angle. This is an illustration of the small slit resolution obtained when using the adapter.

The adapter has been found to be useful in the determination of alloy composition in single crystals. By application of published data,[1,2,3] variations of zinc content in brass single crystals can be detected to within 1/2% zinc with highly reproducible results.

In the investigations of irradiated crystals two difficulties are often encountered. As a result of reflections at high Bragg angles becoming weak or even disappearing when large

---

[1] V. Goler and G. Sachs, "Zugversuche an Kristallen aus Kupper und a-Messing," Z. Physik 55, 581 (1929).

[2] E. A. Owen and G. D. Preston, "Part IV. – X-ray Analyses of Zinc-Copper Alloys," Proc. Phys. Soc. (London) 36, 49 (1923).

[3] A. Westgren and G. Phragmen, "X-ray Analyses of Copper-Zinc, Silver-Zinc, and Gold-Zinc Alloys," Phil. Mag. 50, 311 (1925).

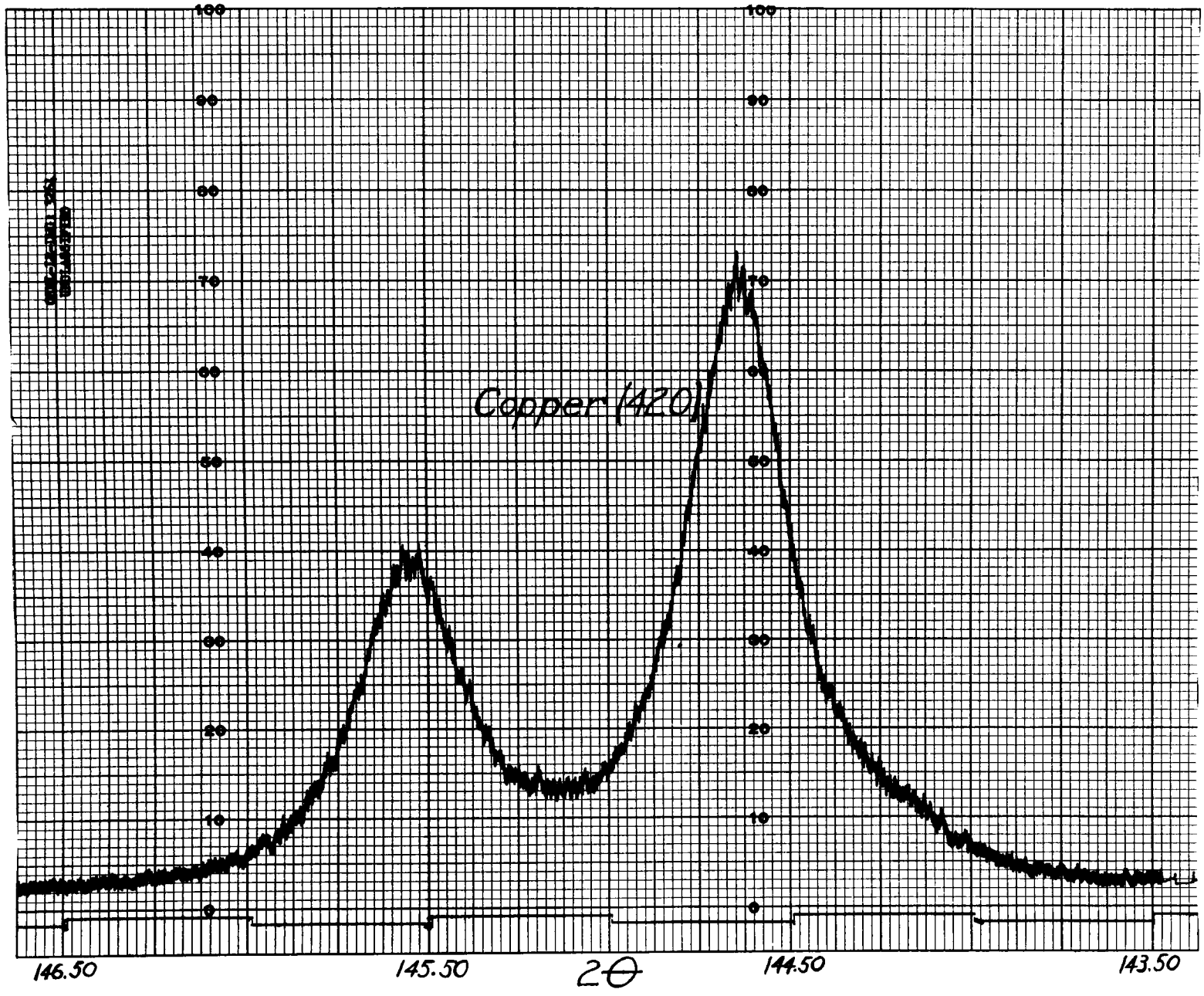

Fig. 10. Diffractometer Trace of (420) Reflection from a Deformed Copper Single Crystal

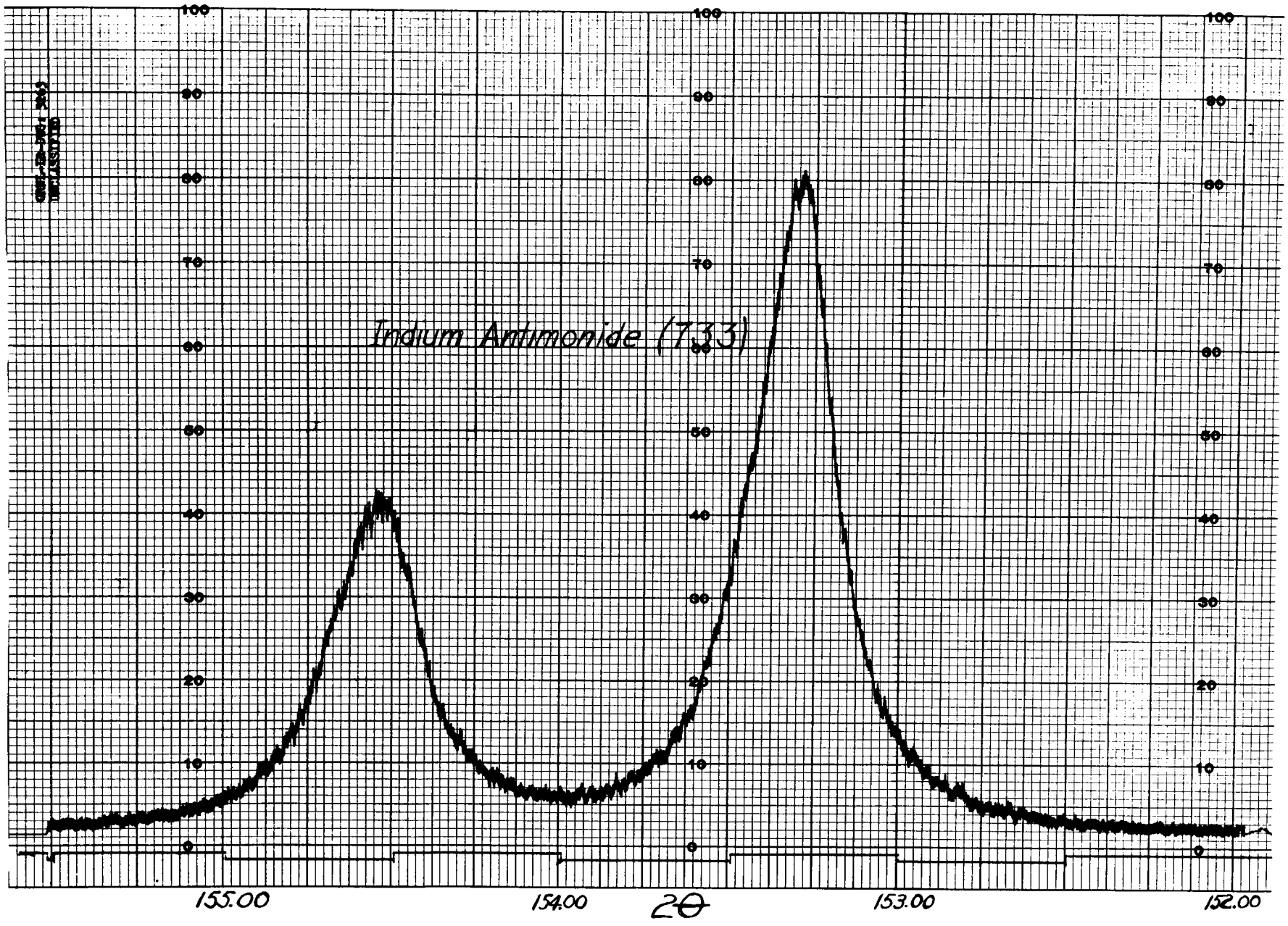

Fig. 11. Diffractometer Trace of (733) Reflection from a Single Crystal of Indium Antimonide

disordering effects occur, x-ray film techniques become ineffective in these studies. The adapter can be used to overcome this obstacle, since large single crystals can be used to give maximum intensities and since reflections which may not be visible on films can be measured. Figure 12 illustrates this fact, as it reveals the c-axis expansion of a quartz crystal following a neutron bombardment of 5.0×10^{19} fast neutrons/cm^2. It is readily seen that an accurate measurement of the (006) spacing can be made in the damaged crystal, whereas film techniques might prove to be unreliable. For example, polycrystalline quartz gives a very weak Debye-Scherrer pattern after undergoing this irradiation. At 2θ greater than 90 deg in quartz, lines are very diffuse and make accurate measurements impossible. Single-crystal diffraction spots obtained by use of precession and Weissenberg cameras also were found to be very diffuse.

If a crystal retains some long-lived activity following irradiation, it is often impossible to make any crystal measurements with film techniques because of film fogging. Within certain limits of activity, which vary according to conditions, the action of deleterious scattering is minimized because the activity must enter through the small receiving slits.

There are perhaps many ways in which the adapter can be used in the study of single crystals other than those included in this report. A general use is that of detecting multiple crystals. In an ordinary Laue back-reflection photograph, the x-ray beam that strikes the sample is usually very small, and therefore only a very small part of the crystal is observed. By using the adapter and enlarging the x-ray exit slit (the normal exit slit is sufficient), the whole crystal surface of a size heretofore mentioned may be observed. This observation is usually made when the single-crystal orientation is desired, and it is possible that twin crystals can also be detected by this method.

The authors wish to express their thanks to N. E. Wilkins for his diligent and patient efforts in fabricating the instrument.

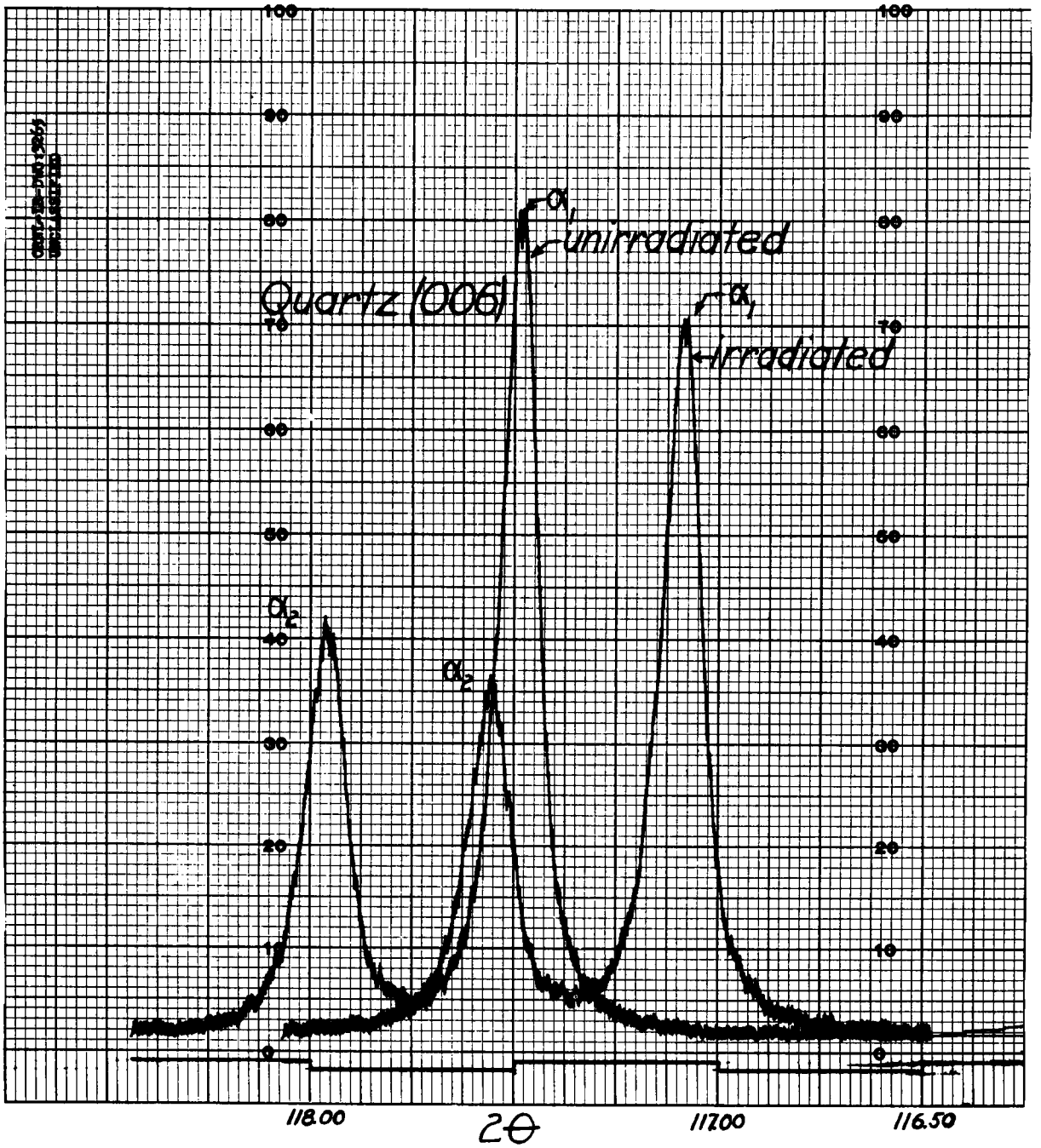

Fig. 12. Diffractometer Traces of (006) Reflection from Quartz Single Crystal Before and After Irradiation.