CENTRAL RESEARCH LIBRARY
DOCUMENT COLLECTION

MARTIN MARIETTA ENERGY SYSTEMS LIBRARIES
3 4456 0349800 7

ORNL 1812
Chemistry-Separation Processes
for Plutonium and Uranium

# THE ELECTROCHEMICAL UTILIZATION OF ION EXCHANGE MEMBRANES IN AEC OPERATIONS

E. J. Parsi

CENTRAL RESEARCH LIBRARY
DOCUMENT COLLECTION
LIBRARY LOAN COPY
DO NOT TRANSFER TO ANOTHER PERSON
If you wish someone else to see this document, send in name with document and the library will arrange a loan.

OAK RIDGE NATIONAL LABORATORY
OPERATED BY
CARBIDE AND CARBON CHEMICALS COMPANY
A DIVISION OF UNION CARBIDE AND CARBON CORPORATION
UCC
POST OFFICE BOX P
OAK RIDGE, TENNESSEE

[redacted]

[redacted]

Report Number: ORNL-1812 [redacted]

This document consists of 34 pages. Number 4 of 139 copies. Series A.

DECLASSIFIED

CLASSIFICATION CHANGED TO:

BY AUTHORITY OF: TID-1147

BY: D. Manson 7/24/57

Contract No. W-7405, eng 26

CHEMICAL TECHNOLOGY DIVISION

Chemical Development Section

# THE ELECTROCHEMICAL UTILIZATION OF ION EXCHANGE MEMBRANES IN AEC OPERATIONS

E. J. Parsi

DATE ISSUED

JAN 17 1955

OAK RIDGE NATIONAL LABORATORY
Operated by
CARBIDE AND CARBON CHEMICALS COMPANY
A Division of
UNION CARBIDE AND CARBON CORPORATION
Post Office Box P
Oak Ridge, Tennessee

[redacted]

MARTIN MARIETTA ENERGY SYSTEMS LIBRARIES

3 4456 0349800 7

## INTERNAL DISTRIBUTION

1. C. E. Center
2. Biology Library
3. Health Physics Library
4-5. Central Research Library
6. Reactor Experimental Engineering Library
7-11. Laboratory Records Department
12. Laboratory Records, ORNL R.C.
13. C. E. Larson
14. L. B. Emlet (K-25)
15. J. P. Murray (Y-12)
16. A. M. Weinberg
17. E. H. Taylor
18. E. D. Shipley
19-20. F. L. Culler
21. F. C. Vondergage
22. W. H. Jordan
23. J. A. Swartout
24. C. P. Keim
25. J. H. Frye, Jr.
26. S. C. Lind
27. A. H. Snell
28. A. Hollaender
29. M. T. Kelley
30. K. Z. Morgan
31. T. A. Lincoln
32. R. S. Livingston
33. A. S. Householder
34. C. S. Harrill
35. C. E. Winters
36. D. W. Cardwell
37. E. M. King
38. W. K. Eister
39. F. R. Bruce
40. D. E. Ferguson
41. H. K. Jackson
42. H. E. Goeller
43. D. D. Cowen
44. R. A. Charpie
45. J. A. Lane
46. M. J. Skinner
47. R. E. Blanco
48. E. J. Parsi
49-50. ORNL Document Reference Library, Y-12 Branch

## EXTERNAL DISTRIBUTION

51. American Machine and Foundry Company
52-59. Argonne National Laboratory
60. Armed Forces Special Weapons Project (Sandia)
61. Armed Forces Special Weapons Project, Washington
62-64. Atomic Energy Commission, Washington
65. Babcock and Wilcox Company
66. Bettis Plant (WAPD)
67-69. Brookhaven National Laboratory
70. Bureau of Ships
71. Carbide and Carbon Chemicals Company (K-31 Plant)
72-74. Carbide and Carbon Chemicals Company (K-25 Plant)
75. Chicago Patent Group
76. Commonwealth Edison Company
77. Detroit Edison Company
78. Dow Chemical Company (Rocky Flats)
79-82. duPont Company, Augusta
83. duPont Company, Wilmington
84. Duquesne Light Company
85. Foster Wheeler Corporati[redacted]

86. General Electric Company (APS)
8[illegible]4. General Electric Company, Richland
[illegible] Goodyear Atomic Corporation
96. [illegible]anford Operations Office
97. I[illegible] State College
98. Kai[illegible] Engineers
99-101. Knoll[illegible]tomic Power Laboratory
102-103. Los Ala[illegible] Scientific Laboratory
104. Massachus[illegible] Institute of Technology (Benedict)
105. Monsanto Che[illegible]al Company
106. Mound Laborat[illegible]
107. Naval Research [illegible]oratory
108. Newport News Ship[illegible]lding and Dry Dock Company
109-110. North American Avia[illegible]n, Inc.
111. Pacific Northwest Pow[illegible] Group
112. Patent Branch, Washingt[illegible]
113. Pennsylvania Power and Li[illegible] Company
114-117. Phillips Petroleum Company [illegible]TS)
118-119. University of California Radi[illegible]on Laboratory, Berkeley
120-121. University of California Radiat[illegible] Laboratory, Livermore
122. Vitro Engineering Division
123. Westinghouse Electric Corporation ([illegible])
124-138. Technical Information Service, Oak Ri[illegible]
139. Division of Research and Medicine, AEC, [illegible]

CONTENTS


| | | Page |
|---|---|---|
| 1.0 | ABSTRACT | 1 |
| 2.0 | INTRODUCTION | 1 |
| 3.0 | CONCENTRATION OF ELECTROLYTES | 5 |
| 3.1 | Concentration of Hydrofluoric Acid | 5 |
| 3.2 | Concentration of Sodium and Lithium Hydroxides | 7 |
| 4.0 | SALT SPLITTING | 7 |
| 4.1 | Preparation of Hydroxide from Chloride and Sulfates of the Alkali Metals | 8 |
| 4.2 | Precipitation of Thorium Hydroxide from Thorium Nitrate | 8 |
| 5.0 | PREPARATION OF ACID-DEFICIENT SOLUTIONS | 10 |
| 5.1 | Preparation of Acid-Deficient Aluminum Nitrate | 10 |
| 5.2 | Preparation of Acid-Deficient Uranyl Nitrate | 11 |
| 6.0 | SEPARATION OF IONS OF LIKE CHARGE | 12 |
| 6.1 | Separation of Alkali Metals with Cation Membranes | 12 |
| 6.2 | Separation of Hydrogen and Deuterium by a Palladium Diaphragm | 13 |
| 6.3 | Separation of Uranyl Sulfate and Sulfuric Acid | 13 |
| 7.0 | APPENDIX | 14 |
| 7.1 | Concentration of Hydrofluoric Acid | 14 |
| 7.1.1 | Laboratory Scale Studies | 14 |
| 7.1.2 | Semi-Pilot-Plant Scale Studies | 14 |
| 7.1.3 | Proposed Methods for Full-Scale HF Concentration | 17 |
| 7.1.4 | Cost Estimate | 18 |
| 7.2 | Concentration of Sodium and Lithium Hydroxides | 19 |
| 7.3 | Preparation of Alkali Metal Hydroxides and Acids from Salts | 21 |
| 7.4 | Preparation of Acid-Deficient Aluminum Nitrate | 21 |
| 7.5 | Separation of Hydrogen and Deuterium by Palladium D[redacted] | 23 |
| 7.6 | Separation of Uranyl Sulfate from Sulfuric Acid | 23 |


[redacted]

[redacted]



## TABLES


| | | Page |
|---|---|---|
| 3.1 | Power Requirements for Hydrofluoric Acid Concentration at Various Percentage Recoveries | 6 |
| 4.1 | Alkali Metal Sulfate Conversion to Hydroxide by Electrodialysis | 9 |
| 7.1 | Concentration of Sodium and Lithium Hydroxides in an Electrodialysis Unit | 20 |


## FIGURES


| | | |
|---|---|---|
| 7.1 | Schematic Diagram of HF Concentration Electrodialysis Unit | 25 |
| 7.2 | Schematic Flowsheet of Semicontinuous Process for Concentrating HF by Electrodialysis | 26 |
| 7.3 | Schematic Flowsheet for Continuous Process for Concentrating HF by Electrodialysis | 27 |
| 7.4 | Schematic Diagram of Electrodialysis Apparatus Used for Conversion of Alkali Metal Sulfate to Hydroxide (experimental apparatus, four compartments per electrode pair) | 28 |
| 7.5 | Preparation of Acid-Deficient Aluminum Nitrate by Electrodialysis | 29 |


[redacted]

[redacted]



## 1.0 ABSTRACT

The work carried out at ORNL by Ionics, Incorporated, in cooperation with the Chemical Technology Division from August 1953 through June 1954 is summarized.

The feasibility of concentrating acids and bases, of preparing acid-deficient salt solutions, and of preparing acids and bases by the electrochemical utilization of ion-exchange membranes was demonstrated. For example, the concentration of hydrofluoric acid by electrodialysis techniques was shown to be a simple, compact, and inexpensive operation. Monobasic aluminum nitrate was prepared economically and continuously in an electrolytic cell which used ion-exchange membranes. Purified alkali hydroxide was obtained from its sulfate salt in a similar electrodialysis-membrane cell. Separation of alkali metals in an ionic fractionation still was shown to be possible, but separation factors were small. Separation of hydrogen and deuterium by electromigration through a palladium diaphragm was investigated briefly. This work was terminated as a result of diaphragm instability.

## 2.0 INTRODUCTION

On the basis of interest in the application of permselective membranes to chemical processing, the Chemical Technology Division of the Oak Ridge National Laboratory acquired ion-exchange membranes and electrodialysis equipment under Subcontract No. 363 with Ionics, Incorporated, of Cambridge, Massachusetts. Ionics personnel worked in the laboratories of the Chemical

[redacted]

[redacted]

Technology Division from August 1953 through June 1954 investigating the application of this equipment. The laboratory is equipped to study a project on a semi-pilot-plant scale to obtain data for economic estimates, to determine the reliability of an operation on a continuous basis, and to test the life of equipment components. The equipment and service are available to all AEC installations.

Much experience was gained in the use of the equipment, and one salvage process was developed on a pilot-plant scale. This experience should be of value in the application of membranes to problems at other AEC installations.

Permselective membranes are made of ion-exchange resin in sheet form. The charged fixed groups and the water in the membranes impart to them certain characteristics which make them useful as diaphragms in electrodialysis. The most important properties are electrical conductivity, selectivity for the transfer of either cations or anions, depending on the nature of the membrane, and impermeability to the passage of water. Membranes made of cation-exchange resin are usually referred to as "cation membranes"; under an applied d-c potential they allow passage of cations preferentially to anions. The reverse is true for anion membranes. Because different ions of like charge are selectively transferred, separation of two cations or two anions is also possible in a membrane unit.

During the passage of ions through a membrane, water is transferred by endosmosis in the direction of the ionic flow. More water is transferred than the water of hydration of the ions moved, but the induced flow is low enough to permit the membrane to operate efficiently as a water barrier. Water transfer rates vary with the type of ion moved through

[redacted]

the membrane and with concentration of the source solution, and appear to be a direct function of current density.

The following applications of membranes were studied:

1. Concentration and Dilution of Electrolytes and Their Separation from Nonelectrolytes. When cation and anion permselective membranes are stacked in an alternating pattern with electrolyte solution separating them, a direct current passed through the system will dilute the solution in alternate cells and concentrate it in the others. A larger number of membranes can be arranged between two electrodes to reduce the energy and space requirements for a particular application by reducing the effect of electrode voltage and by providing a large membrane surface area in a small unit. Such an arrangement may be used to demineralize brackish waters and sea water, to concentrate industrial solutions, and to recover valuable ions from waste streams. Because it concentrates only the ionic constituents, it can be used to separate them from the nonionic constituents of a solution, as in the deashing of certain industrial solutions, for example, sugar juice, and in the separation of ionic material from colloidal material. This type of unit is usually referred to as a "demineralizer."

2. Salt Splitting. Splitting of an alkali metal salt into its corresponding hydroxide and acid may be accomplished in a three-compartment cell by moving the anion through an anion membrane from the center cell into the anode cell to form the acid, and the cation through a cation membrane into the cathode cell to form the base. Contamination of the products with salt is held to a minimum by using permselective membranes to separate the center cell from the electrode cells. Purification from colloidal heavy metal compounds and nonionic impurities may also be accomplished simultaneously.

3. Preparation of Acid-Deficient Solutions and Neutralization of Solutions. Solutions such as uranyl nitrate or aluminum nitrate may be made acid deficient by electrodialysis. The nitrate ion may be moved into the anode cell through an anion membrane and the cathode may be used directly to supply hydroxide as in the case of aluminum nitrate. When there is danger of chemical reduction, as in the case of uranium, hydroxyl ions may be transferred from the cathode cell to the uranyl nitrate through another anion membrane. Similarly, excess acid or base may be separated from a salt in a single- or double-membrane electrolytic cell.

4. Separation of Ions of Like Charge. The ionic fractionation still may be used to separate ions of like charge. It consists of a number of ion-exchange membranes of the same type stacked together a short distance from each other and separated by gaskets. Solution is flowed along the surface of each membrane before it is transferred to the next membrane below it. Channels cut into the gaskets between each membrane define the path of flow between the membranes. In such a system each membrane serves as a fractionation plate for the ions that are transferred electrically from the solution below it into the solution above. The enriched solution is passed countercurrently to the electromigrating ionic stream under conditions of partial reflux.

A possible application that was not investigated is the separation of electrodes in electrolytic reactions in which there is danger of one electrode affecting the reaction at the other.

A program is planned to study additional application of electrodialysis ion-exchange-membrane techniques to problems of AEC interest. The program will include an investigation of the preparation of uranium tetrafluoride, the decontamination and recovery of uranium from spent

slugs, the separation and purification of cesium from waste material, and the preparation of a fine granular thorium dioxide precipitate by these techniques. Studies on the stability of various ion-exchange membranes when exposed to extremely high radiation are also planned.

## 3.0 CONCENTRATION OF ELECTROLYTES

### 3.1 Concentration of Hydrofluoric Acid

An economical and convenient method of concentrating hydrofluoric acid obtained as a waste stream in a process being developed at ORNL was desired in order that the HF could be reused in the process. An electrodialysis cell was used to concentrate this hydrofluoric acid from 1.6 to 7-10 M, the concentration desired. Operation of the cell was satisfactory throughout a 720-hr test run made to determine the durability of the cell components, and at the end of the test all components were in good condition. Current efficiencies of 100 to 200% were obtained, indicating that the acid polymerized to form ions of the type $H_xF^-_{x+1}$. Experimental details are given in the appendix (see Sec. 7.1).

Preliminary cost estimates based on semi-pilot-plant scale experiments are given for the recovery process. The cost of energy to concentrate HF semicontinuously from 1.6 to 7 M, with 99% recovery of the HF, was estimated at 3.6¢ per pound of HF with electricity at 1¢ per kilowatt-hour. The cost of membranes, with replacement twice a year, would be about 4.2¢ per pound of HF and amortization of a 250-lb/day plant in 6.25 years would be 1.6¢ per pound of HF. The power requirements for various percentage recoveries are given in Table 3.1.

Advantages of electrodialysis over distillation are compactness of the equipment, near-room-temperature operation, and purification. At 99% recovery it is estimated that 40 to 80% of the ionic dissolved impurities and all colloids would be purged from the HF.

Table 3.1

Power Requirements for Hydrofluoric Acid Concentration at Various Percentage Recoveries

Plant capacity: 250 lb of HF per day

| HF Recovery (%) | Stage 1 | | | Stage 2 | | |
|---|---|---|---|---|---|---|
| | Unit Size (in.) | Maximum Current (amp) | Voltage (volts) | Unit Size (in.) | Maximum Current (amp) | Voltage (volts) |
| 87.5 | 18 x 20 x 7 | 130 | 90 | 18 x 20 x 4 | 200 | 35 |
| 95.0 | 18 x 20 x 8 | 130 | 105 | 18 x 20 x 4 | 200 | 35 |
| 99.0 | 18 x 20 x 11 | 130 | 150 | 18 x 20 x 4 | 200 | 35 |
| 99.6 | 18 x 20 x 14 | 130 | 192 | 18 x 20 x 4 | 200 | 35 |

A plant with capacity to process 250 lb of HF per day would require a two-stage unit 18 x 20 in., with the stages 11 and 4 in. deep, respectively. Each stage would be equipped with CR-51 cation membranes and AR-110 anion membranes, alternated in the cell, and a platinum anode and cathode (see Fig. 7.1). The anode would be separated from the hydrofluoric acid by a cation membrane, 0.1 M sulfuric acid being used as the anolyte. The concentration of HF in the anolyte should never exceed 0.5 M to prevent anode corrosion. No protection of the cathode would be required. The

temperature of the unit should not be allowed to rise above 40°C to extend the life of the membrane.

Flowsheets for both a semicontinuous and continuous concentration method were developed (see Figs. 7.2 and 7.3 in the appendix).

### 3.2 Concentration of Sodium and Lithium Hydroxides

An electrodialysis unit was used to concentrate both sodium hydroxide solution and lithium hydroxide solution approximately 10-fold (see appendix, Sec. 7.2, for details). About 2.7 kwhr per pound of sodium hydroxide was required to concentrate 0.05 N NaOH to 0.28 N NaOH with 80% hydroxide recovery. A similar lithium hydroxide concentration required about twice as much electrical energy.

The electrodialysis unit contained CR-51 cation membranes and AR-110 anion membranes. Platinum electrodes were used. Operation of the unit was satisfactory and there was no obvious damage to any part of it after about 13 hr of operation.

## 4.0 SALT SPLITTING

Splitting of salts is a method of recovering or preparing acids and bases. An economical method for salt splitting would be useful in recovering the base, for example, from a salt which has been formed from the base during isotopic enrichment; the recovered base would therefore be very much more valuable than the original. Salts that present a waste disposal problem could be converted to the acid and base for reuse in a process. An additional advantage of this procedure is purification of the metal from colloidal and anionic impurities.

Results of experimental work with an electrodialysis unit indicated that salt splitting in this apparatus is competitive with other methods

and, as a result of the work, a pilot plant was designed and is being built in the Y-12 area for salvage of a waste salt. In this unit the membranes are 18 by 20 in. and there are 30 electrode pairs, i.e., 30 anodes and 30 cathodes.

### 4.1 Preparation of Hydroxide from Chlorides and Sulfates of the Alkali Metals

The experimental work was carried out with chlorides and sulfates of the alkali metals. A three-compartment electrodialysis unit containing CR-61 and AR-110 ion-exchange membranes was used (see appendix, Sec. 7.3, for experimental details). Caustic of about 1 N concentration and sulfuric acid of about 0.5 N concentration were produced at a continuous rate for several hours in each run. Energy consumption was about 0.3 kwhr per gram-equivalent of acid or base produced and current efficiencies were approximately 60% for 75% metal removal from the salt (see Table 4.1). Only traces of anions moved into the hydroxide and only traces of the alkali metal moved into the acid. As in other electrodialysis operations, colloids and other nonionic substances in the salt were separated from the product. The high degree of purification and the high current efficiencies obtained with this method are not possible with other types of diaphragms.

### 4.2 Precipitation of Thorium Hydroxide from Thorium Nitrate

An electrodialysis unit containing a single anion membrane was used to denitrate thorium nitrate and form solid thorium hydroxide. Granular precipitates of aluminum hydroxide had been produced under certain conditions during nitrate removal from aluminum nitrate (see Secs. 5.1 and 7.4), and it was hoped that granular precipitates of thorium could also be obtained in this manner.

Table 4.1

Alkali Metal Sulfate Conversion to Hydroxide by Electrodialysis

Electrodes: 9- x 10-in. lead sheet anode
9- x 10-in. steel sheet cathode

| Potential (volts) | Current Density ($ma/cm^2$) | Current Efficiency (%) | Metal Removal From Salt (%) | Energy per Equivalent of Hydroxide (kwhr) | Equivalents of Hydroxide per Hour per Square Foot of Electrode |
|---|---|---|---|---|---|
| 7.3[a] | 70 | 55 | 58 | 0.36 | 1.44 |
| 7.5 | 70 | 64-69 | 70-75 | 0.29-0.31 | 1.7-1.8 |
| 7.5-7.7 | 84 | 64-67 | 58-70 | 0.27-0.32 | 2.0-2.4 |
| 7.8-8.5 | 100 | 58-66 | 67-81 | 0.31-0.38 | 2.2-2.5 |

(a) 20% of caustic refluxed through buffer cell into feed (see appendix, Sec.7.3, for description of apparatus.)

The cell used in this case consisted of a platinum anode and a platinum cathode separated by an anion membrane. Nitrate was moved toward the anode while thorium hydroxide was precipitated at the cathode. The thorium nitrate became acid deficient before the start of precipitation. The initial precipitate was granular but became gelatinous and stuck to the electrode as the solution became more acid deficient. The use of an antimony cathode increased the amount of granular thorium hydroxide produced, but the fact that nitric acid attacks this electrode makes it unsuitable for large-scale use.

Attempts to move the thorium through a cation membrane into a neutral or basic solution were unsuccessful. In addition to negligible thorium transfer, the cathode in this experiment became dark and slightly radioactive, suggesting the possibility that some active daughter elements of thorium were transferred and deposited on it.

## 5.0 PREPARATION OF ACID-DEFICIENT SOLUTIONS

### 5.1 Preparation of Acid-Deficient Aluminum Nitrate

Production of a 0.6 M aluminum nitrate solution, 0.44 N acid deficient, at a rate of approximately 24 liters/hr is required for pilot-plant studies of a process being developed at ORNL.

Solutions 0.6 to 0.7 M in aluminum nitrate and 0.50 to 0.52 N acid deficient were prepared from 0.60 to 0.64 M aluminum nitrate at a rate of 0.85 liter/hr in a two-compartment electrodialysis unit containing a single AR-110 anion membrane, a platinum anode, and a Hastelloy C cathode. The temperature of the system was raised to 58°C. The nitrate ions were removed from the cathode cell through the membrane while the hydrogen ions were reduced to hydrogen gas at the cathode. Nitric acid was formed in

the cathode cell. The acid-deficient solutions produced were stable. The formation of granular precipitate was prevented by limiting acid deficiency and by operating at an elevated temperature.

An estimate of the economics of the process for preparing monobasic aluminum nitrate, 0.6 M aluminum, at 130 gal/hr indicated the cost of electrodialysis per pound of aluminum to be $0.32, of which 35% is operating labor cost. The cost is $0.45 per pound of aluminum processed, including charges for standard equipment amortized at 16% per year and the permselective membranes and gaskets amortized at 200% per year. No credit was allowed for the nitric acid produced. Aluminum nitrate for feed to the electrodialysis cell may be obtained for $2.33 per pound of aluminum for 2 M solution and $1.93 per pound of aluminum for crystals. At present, the cost of buying dibasic aluminum nitrate is $3.00 per pound of aluminum, exclusive of storage costs and cost of composition and concentration adjustments. Adjustment costs are about $0.20 per pound of aluminum if technical grade nitric acid is used. The saving by the electrodialysis method is thus $0.55 to $0.95 per pound of aluminum exclusive of amortization.

The cost of installing a plant to produce 130 gal/hr at the required solution concentrations would be of the order of $117,000 with platinum anodes and $95,200 with Tirrelloy anodes.

5.2 Preparation of Acid-Deficient Uranyl Nitrate

In an attempt to produce uranium trioxide, a solution of uranyl nitrate was made acid deficient in a membrane unit containing two anion membranes between the electrodes. One of these membranes was used to separate the cathode from the solution because of the danger of reducing the uranium to $U_3O_8$. Hydroxyl ions passed through one anion membrane into the uranyl nitrate solution from a solution of sodium hydroxide about 0.1 N and

nitrate ions passed out into the anode cell through the other anion membrane. The net effect was removal of nitric acid from the central uranyl nitrate cell to the anode cell.

Drawbacks to the process were the accumulation of $UO_3$ on the most stagnant portions of the anion membrane surface next to the cathode and a rapid increase in electrical resistance of the cell. This increased resistance has been attributed to formation and polymerization of $U_2O_5^{++}$ ions as the solution is made acid deficient. As a result, not more than 1 mole of nitrate per mole of uranium was removed in any experiment. No studies were made of the effect of current density, concentration, or other variables on the operation.

## 6.0 SEPARATION OF IONS OF LIKE CHARGE

### 6.1 Separation of Alkali Metals with cation Membranes

The enriching section of an ionic fractionation still (I-still) which consisted of twenty CR-51 cation membranes was run at total reflux for 106 hr to separate sodium and lithium acetates. A separation factor of 1.76 per plate was obtained, with the sodium moving faster than the lithium. A feed solution about 0.88 N in sodium and lithium acetate was used. The mole fraction of sodium was 0.011. At a current density of 108 $ma/cm^2$, the total voltage of the I-still was 25 volts and water transfer was 0.14 ml/millifaraday.

At steady state the mole fraction of sodium at the bottom plate was 0.0110 and at the top plate, 0.9987.

Electromigration experiments using a single CR-51 cation membrane to separate rubidium and potassium acetates showed that the rubidium ion is more mobile. A separation factor of 1.10 was observed when a current density of 25 to 100 $ma/cm^2$ was used.

For the membranes tested to date, the relative mobilities of hydrogen and the alkali metals were found to be $H^+ > Rb^+ > K^+ > Na^+ > Li^+$.

6.2 Separation of Hydrogen and Deuterium by a Palladium Diaphragm

Studies were made for the purpose of measuring the separation factor of hydrogen and deuterium during migration through a palladium diaphragm, but the 0.0012-in. palladium diaphragms used developed pinholes and cracked in all cases before a run was made of sufficient length to determine a separation factor.

With an automatic reversing cycle of 5 sec on the positive cycle and 1 sec on the negative cycle, current efficiencies of 75 to 100% were obtained for hydrogen transfer at a current density of 25 to 50 $ma/cm^2$. Earlier attempts to use a steady current had resulted in a high current efficiency at the start which dropped steadily to a low value during the course of the experiment.

6.3 Separation of Uranyl Sulfate and Sulfuric Acid

Reduction of the sulfate-to-uranium ratio in aqueous solution of uranyl sulfate was made in an ionic fractionation still. It comprised simultaneous separation of hydrogen ion and positive uranyl cations in the cation membrane section of an I-Still and separation of the negative uranyl sulfate complexes and sulfate ions in the anion membrane section of the I-Still. The $H^+$-$UO_2^{++}$ separation factor per plate was approximately 28.0 and the uranium-sulfate-complex—sulfate separation factor was approximately 3.5 using Nepton CR-61 cation permselective membranes and AR-110 anion permselective membranes, respectively. A current density of 75 $ma/cm^2$ was used.

# 7.0 APPENDIX

## 7.1 Concentration of Hydrofluoric Acid

### 7.1.1 Laboratory Scale Studies

Laboratory-scale batch experiments were made in a 9- by 9- by 4-in. electrodialysis unit. The unit was equipped with Nepton CR-51 cation membranes and AR-110 anion membranes, alternated in the cell, and a platinum anode and cathode sheet (see Fig. 7.1). The dilute HF, which was flowed between the membranes while an electric current was passed through the membranes and solution, became concentrated in alternate cells and diluted in the cells between. Concentrations of 7 to 10 M HF were obtained from 1.6 M feed, but with more dilute feed the product concentration was lower because of additional water transferred with the HF by endosmosis. Current efficiencies of the order of 180% were obtained for about 50% HF removal, based on the amount of HF transferred from 1.5-2.5 M to 4-6 M in one run. An electrolytic resistance of 18 ohm-$cm^2$ was estimated per cation-anion membrane pair from the observed volatage.

Losses of platinum from the anode were 0.74 mg/amp-hr for 120 amp-hr. In several subsequent runs, a dilute sulfuric acid anolyte, separated from the hydrofluoric acid by a cation membrane, was used to reduce corrosion of the platinum anode. The platinum loss was reduced by this method to about 0.014 mg/amp-hr. No protection was required for the platinum cathode.

### 7.1.2 Semi-Pilot-Plant Scale Studies

Studies on semicontinuous concentration were made in a semi-pilot-plant unit, 9 by 9 by 2 in. In this method HF is removed in one stage from successive batches of 1.6 M acid into a constant 1.6 M reservoir

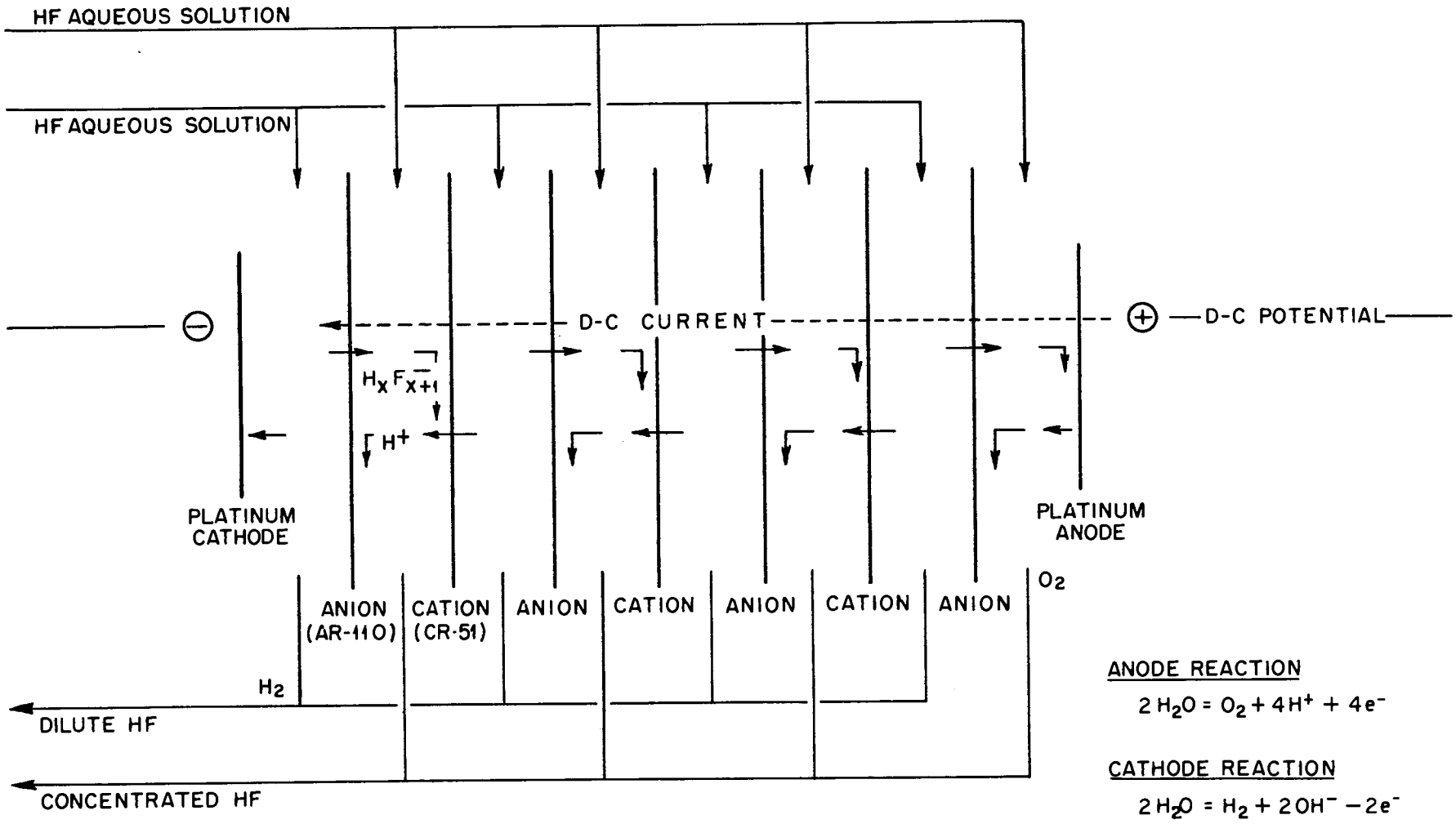


Fig. 7.1. Schematic Diagram of HF Concentration Electrodialysis Unit.

and from this reservoir is transferred continuously in a second stage into a 7 M reservoir from which the product overflows. Current efficiencies of about 100% for the first stage and 161% for the second stage were obtained with 99.6% HF recovery.

A laboratory scale test was run to determine the life of the unit under process conditions. The unit was under current for 720 hr but actually stood full of hydrofluoric acid for 1100 hr. At the end of the test the Saran-supported CR-51 cation membranes were in good condition, with no cracks or deformation on the area exposed to current. Fluorothene-G, with which the outer edges of the membrane had been covered, did not prevent drying and cracking of the surface of the membrane exposed to the air, and there was a constant seepage of HF to the outside. Extra pressure did not improve this condition, but rubber frames, which had been found excellent for this purpose in previous experiments, would probably have helped. The anodic surface of all the membranes appeared dull in comparison with the original surface, and the rubber-styrene plastic spacers stuck firmly to the membranes in spots. The Dynel-supported AR-110 anion membranes were in good condition except for yellow coloration on the anodic surface. There were no cracks or deformation and no sticking to the spacers.

All spacers were in good condition except for one next to the cell separating the anode from the rest of the unit. This one slipped out of position on one side after 365 hr of operation and deformed the membranes adjacent to it. The failure of this spacer was probably caused by heat and pressure rather than by HF attack.

Both the platinum anode and the platinum cathode were in excellent condition. The exposed surface of the anode assumed a golden coloration but did not seem to have been corroded by the acid.

The test unit used consisted of four concentrating cells, four diluting cells, a cell separating the anode from the rest of the unit, and a dilute sulfuric acid (0.1 M) anode cell separated from the adjacent cell by a cation membrane. The hydrofluoric acid was recirculated through the concentrating and diluting cells by a Vanton pump common to both streams. A separate pump was used to recirculate the sulfuric acid anolyte. All the flows were in parallel to eliminate pressure differentials across the membranes.

The test was run at a current density of 60 to 80 $ma/cm^2$ and at an average temperature of 40 to 50°C. Hydrofluoric acid removal per pass was set at approximately 15%.

During the first 365 hr of operation under current the resistance of the unit increased from an initial value of 1.25-1.30 ohms (18 $ohm\text{-}cm^2$ per cell pair, estimated) to 1.53 ohms, and the pump speed had to be increased to maintain the proper flow because of a slight increase in the pressure drop. The increased electrical resistance that resulted in the remaining 355 hr of operation, i.e., from 1.53 to 1.67 ohms. indicated additional partial blocking of flow through the cells affected. After 365 hr under current, a short concentration run showed that the current efficiency had not changed. This test run yielded a 9 M HF product from a 1.6 M reservoir at a current density of 133 $ma/cm^2$ and a current efficiency of 159%. The temperature of the unit rose to 50-60°C.

To prolong the life of the unit, the operating temperature should not exceed 40°C. Cooling of the recirculating solutions would be necessary to keep the operating temperature at this level.

One experiment was conducted to determine whether HF at its azeotropic concentration of 20.8 M could be concentrated in a demineralizer. The unit used in the other HF experiments was employed. At a current

density of 180 $ma/cm^2$ the resistance per membrane pair was about 5 $ohm\text{-}cm^2$. The current efficiency was estimated at about 95% and the concentration of the HF transferred was approximately 40 M. Hydrofluoric acid feed at 22.2 M was concentratedto a 24.0 M product.

Because of the fundamentally different mechanisms involved in vapor distillation and electrodialysis, the fact that the concentration range covered did not specifically cover the azeotropic concentration is not considered significant, and similar results would be expected with the azeotrope.

7.1.3 Proposed Methods for Full-Scale HF Concentration

For full-scale HF concentration two methods are possible: semi-continuous and continuous.

In the semicontinuous method (see Fig. 7.2) tanks A and B are filled with 1.6 M HF feed solution; then the solution from Tank A is recirculated through stage 1 until the desired transfer of HF into solution circulating from the feed storage tank has been accomplished. At this point, by means of appropriate valving, solution from Tank B begins to circulate through the cell. The HF-depleted solution in tank A is discharged to waste and a new batch of 1.6 M HF is transferred from the feed storage tank to tank A. The alternate use of tanks A and B is regulated by either a closed loop control or by timer-controlled cycling. A pre-set constant voltage is maintained across the stage. The acid from the feed storage tank is also continuously recirculated through stage 2 where a constant voltage is also maintained. In this stage the acid is concentrated to 7 M and discharged to a reservoir from which a portion is continuously withdrawn as product. Enrichment of the acid circulating from the feed storage tank, brought about in stage 1, is balanced by the depletion brought about in stage 2, with the result that the concentration of acid in the

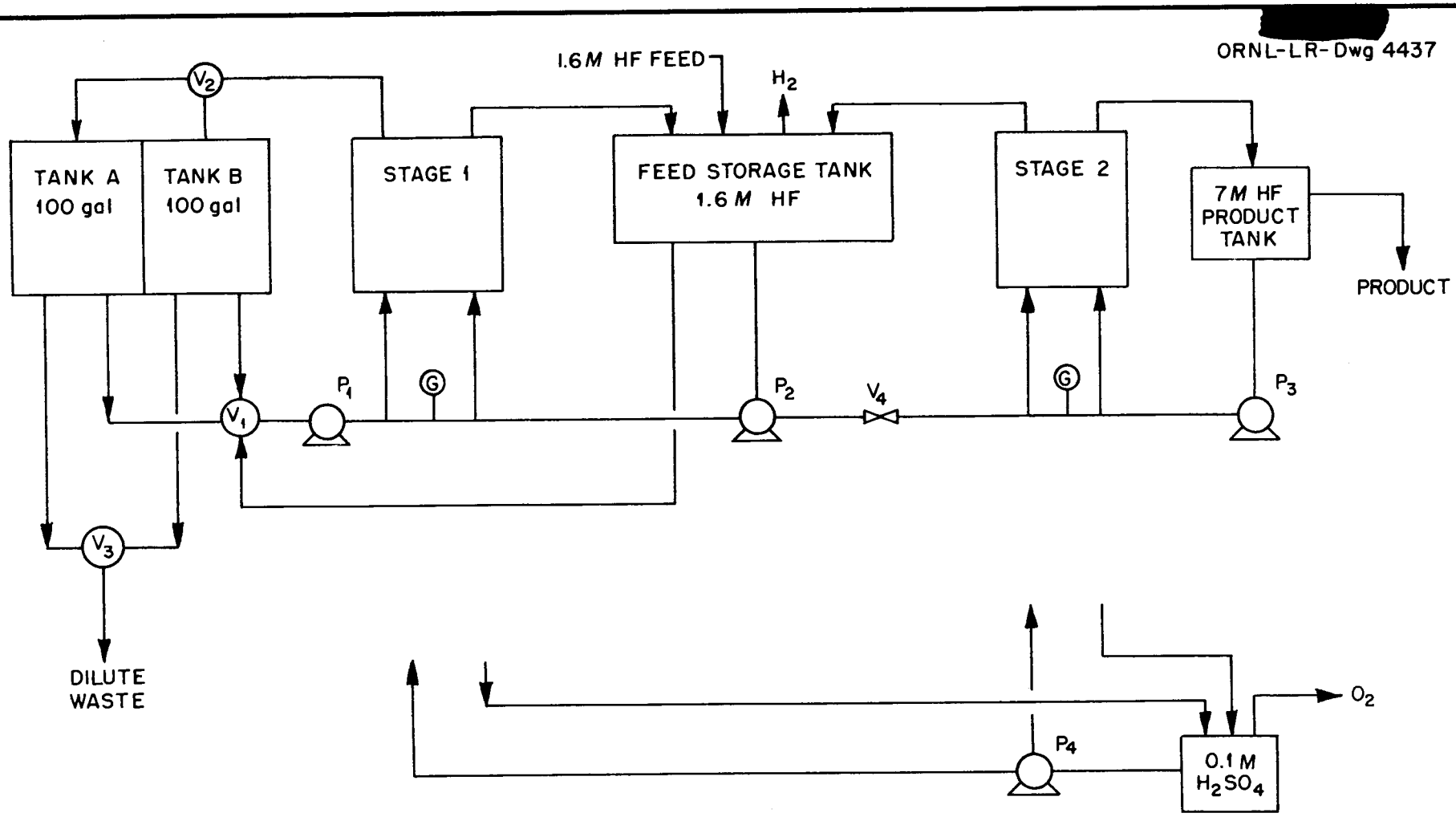


$V_1$, $V_2$, $V_3$ : Automatic Valves for HF
$V_4$ : Flow Control Valve
$P_1$, $P_2$, $P_3$ : HF Pumps
$P_4$ : Dilute $H_2SO_4$ Pump
G : Differential Pressure Gage

Fig. 7.2. Schematic Flowsheet of Semicontinuous Process for Concentrating HF by Electrodialysis

storage tank remains nearly constant. A continuous flow of product is obtained and there are no interruptions of current or liquid flow during the operations. Three pumps to handle aqueous hydrofluoric acid and one small pump to handle dilute sulfuric acid are required. For a 250-lb/day pilot plant, stage 1 will vary in size from 18 by 20 by 7 in. for 87.5% recovery to 18 by 20 by 11 in. for 99% recovery; stage 2 will be 18 by 20 by 4 in. for 87.5 to 99% recovery.

The pump capacities required at 99% recovery will be approximately as follows: $P_1$, 250 gph; $P_2$, 450 gph; $P_3$, 100 gph; $P_4$, 10 gph. The storage tanks will have 100 gal capacity for a 3-hr cycle. Power requirements will be about 20 kw maximum for stage 1, and 5 kw for stage 2.

The automatic valves shown control the operation of stage 1 and will be energized by a cycle timer for semiautomatic control by a conductivity bridge coupled with a float indicator for completely automatic operation.

In the fully continuous method (see Fig. 7.3) the concentration stage is the same as for the semicontinuous flowsheet but the diluting section will require more than one stage and closer control of the flow rates. There are two hydrofluoric acid pumps and one sulfuric acid pump. On the basis of a 250-lb/day plant at 99% recovery, the pump capacities are approximately as follows: $P_1$, 180 gph; $P_2$, 100 gph; $P_3$, 10 gph.

The experimental data are not fully defined for this manner of operation and power requirements are not adequately known.

7.1.4 Cost Estimate

Based on the results of the semi-pilot-plant scale experiments, a plant to handle 250 lb of HF per day in semicontinuous operation for 99% recovery would require a membrane unit 18 by 20 by 11 in. for the first stage and a unit 18 by 20 by 4 in. for the second stage. With a 130-amp current, a potential of 150 volts would be required (see Table 3.1). The

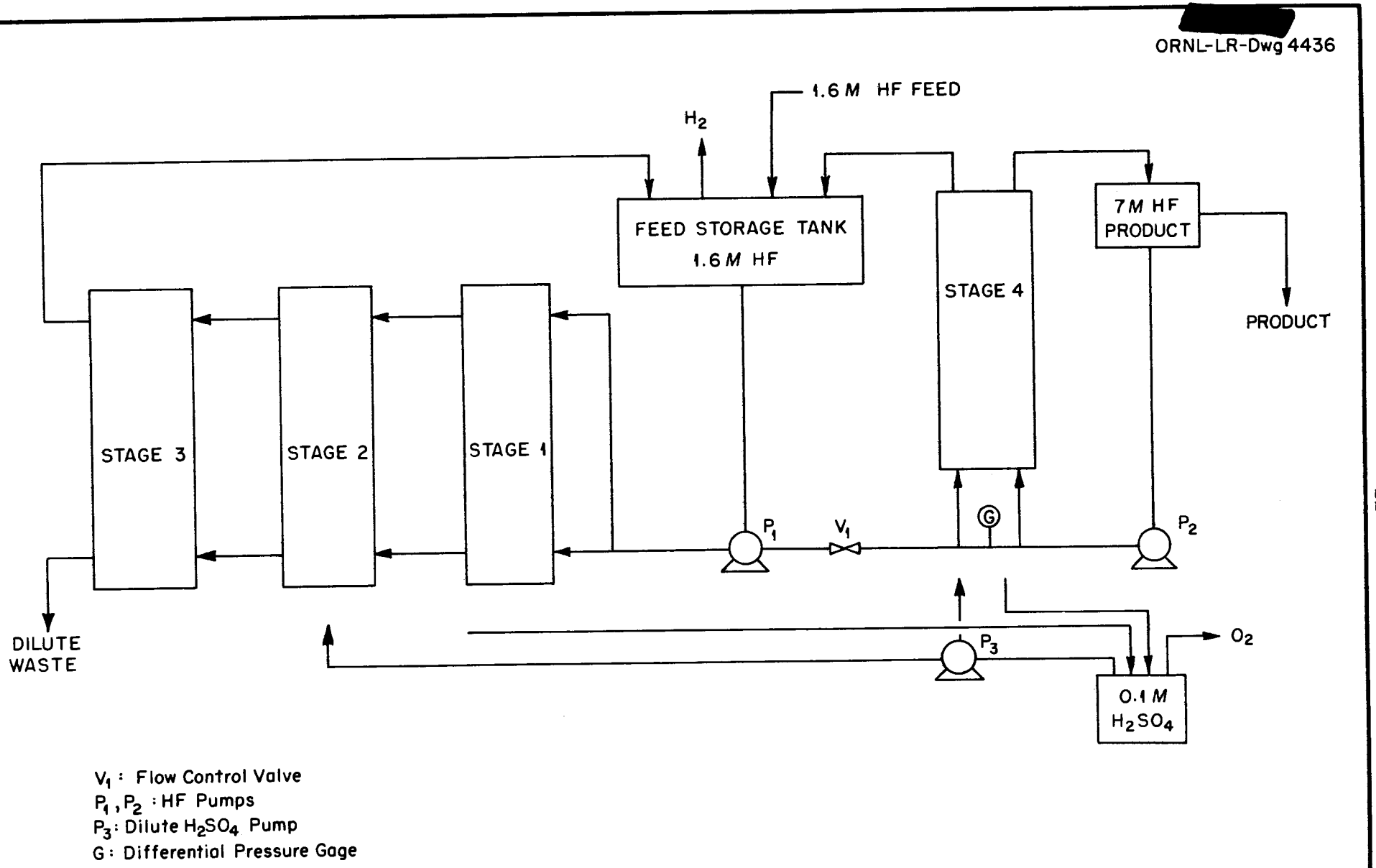


Fig. 7.3. Schematic Flowsheet for Continuous Process for Concentrating HF by Electrodialysis.

cost of electrical energy, C, to concentrate 1.6 M HF to 7 M HF, in the range from 85.0 to 99.6% recovery, may be expressed in cents per pound of HF as

$$C = \left(0.73 + 0.63 \ln \frac{100}{100-R}\right)P \qquad (1)$$

where R is the percentage recovery of HF and P is the cost of d-c energy in cents per kilowatt-hour. At $7.50 per square foot of current-effective membrane area, the approximate cost of membrane replacement, $C_M$, in cents per pound of HF for the same recovery may be expressed as

$$C_M = \left(0.69 + 0.31 \ln \frac{100}{100-R}\right)\left(\frac{1}{L}\right) \qquad (2)$$

where L is the usable life of the membranes in years.

The only other major costs are amortization of the auxiliary equipment such as pumps, tanks, valves, and rectifier.

## 7.2 Concentration of Sodium and Lithium Hydroxides

In batch experiments sodium and lithium hydroxides were concentrated in a demineralizer unit which contained five cell pairs. Two experiments were made with dilute sodium hydroxide and two with dilute lithium hydroxide. The data are given in Table 7.1.

The power required to concentrate 0.010 N NaOH to 0.15 N NaOH with 91% hydroxide recovery was estimated as 3 to 4 kwhr per pound of sodium hydroxide. The power consumed in the other run, which concentrated 0.05 N NaOH to 0.28 N with 80% hydroxide recovery, was about 2.7 kwhr per pound of sodium hydroxide. The power used to concentrate approximately 0.05 N LiOH to 0.4 N at 75% hydroxide recovery was estimated at 6.2 kwhr per pound of lithium hydroxide.

Diffusion coefficients were calculated, the assumption being made

that the current efficiency remained unchanged throughout an experiment. The actual current efficiency, corrected for back-diffusion from the concentrated to the dilute streams, may be estimated if the diffusion coefficients are known.

Table 7.1

Concentration of Sodium and Lithium Hydroxides in an Electrodialysis Unit

Platinum foil electrodes, CR-61 cation membranes, AR-110 anion membranes

| Hydroxide Concentration (N) | | | | Current Efficiency | Diffusion Coefficient | Current Density ($ma/cm^2$) | |
|---|---|---|---|---|---|---|---|
| In Diluting Reservoir | | In Concentrating Reservoir | | | | | |
| Initial | Final | Initial | Final | (%) | (meq/cm/sec) | Initial | Final |
| **Sodium Hydroxide** | | | | | | | |
| 0.0104 | 0.00087 | 0.0104 | 0.156 | 75-80 | $1.7 - 2.1 \times 10^{-6}$ | 5 | 1.6 |
| 0.0500 | 0.0133 | 0.0495 | 0.279 | 65-72 | $1.6 - 2.6 \times 10^{-6}$ | 10 | 6 |
| **Lithium Hydroxide** | | | | | | | |
| 0.0144 | 0.0058 | 0.044 | 0.187 | 52 | $1.4 \times 10^{-6}$ | 4 | 5 |
| 0.0462 | 0.0112 | 0.0450 | 0.389 | 58-59 | $2.4 \times 10^{-6}$ | 18 | 7.5 |

## 7.3 Preparation of Alkali Metal Hydroxides and Acids from Salts

Experiments on salt splitting by electrodialysis were carried out with 1 N solutions of alkali chlorides and sulfates. In an experiment two units were connected in parallel, both electrically and hydraulically. The components of the sulfate-splitting unit were arranged as follows: a cathode sheet, two cation membranes, one anion membrane, one soft lead anode sheet common to both units, one anion membrane, two cation membranes, and one cathode (see Fig. 7.4). The feed sulfate was passed between the cation and anion membranes. The cations migrating toward the cathode cell to form metal hydroxide passed through a buffer cell between the two cation membranes. The contents of this cell were basic and served to remove from solution any heavy metal impurities that migrated through the feed cell cation membrane. The sulfate ions migrated through the anion membrane into the anode cell to form sulfuric acid.

In the case of chloride splitting, an extra cation membrane was inserted next to the anode to isolate it from the hydrochloric acid formed, and thus prevent formation of chlorine. Dilute sulfuric acid was used in the anode compartment to carry the current.

During operation the temperature rose from about 25°C to a steady-state value of 40 to 45°C. At this temperature level the polyvinyl chloride spacers became deformed, blocking the flow at the feed cell. A rubber-styrene spacer eliminated this difficulty.

## 7.4 Preparation of Acid-Deficient Aluminum Nitrate

A 9- by 10-in. unit with a platinum foil anode and a Hastelloy C cathode (sheet) was used in these studies. The cell was arranged as a

UNCLASSIFIED
ORNL-LR-Dwg 4411

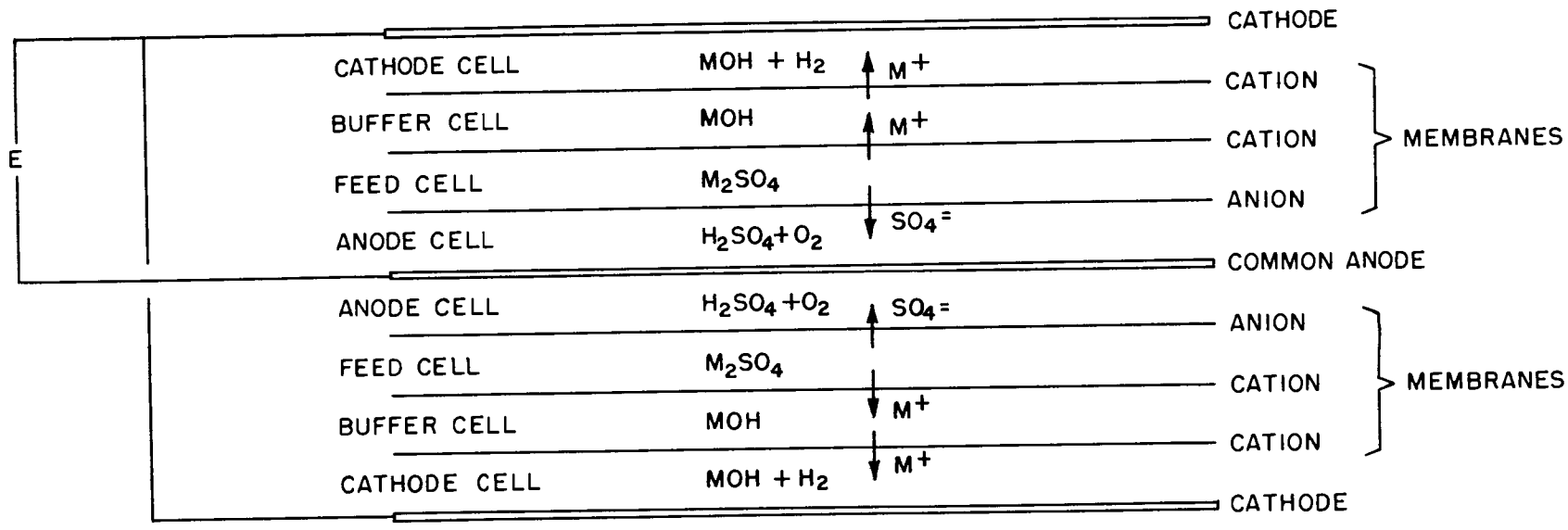


Fig. 7.4. Schematic Diagram of Electrodialysis Apparatus Used for Conversion of Alkali Metal Sulfate to Hydroxide (experimental apparatus, four compartments per electrode pair).

two-compartment cell: a cathode and anode cell separated by an anion membrane (Dynel-supported AR-110). Rubber-styrene plastic spacers were used to separate the membrane from the electrodes. In operation the electrode streams were recirculated to remove the gases formed at the electrodes. The cathode stream was recirculated through a heated vessel to maintain the operating temperature at 58°C. At this temperature formation of aluminum hydroxide was prevented and a clear product was obtained. A granular precipitate forms at lower temperatures and/or at higher acid deficiency values.

A schematic diagram of a similar cell is given in Fig. 7.5. It shows two cells with a common cathode and illustrates how a stack of "electrode pairs" can be arranged in a single unit to increase its capacity.

A 100-hr run was made during which no significant changes were observed in the acid deficiency of the product, the current efficiency, or the operating voltage of the unit. In this run aluminum nitrate approximately 0.6 M was fed at 13 to 14 ml/min into the catholyte stream. The product was 0.6 to 0.65 M in aluminum and about 0.5 N acid deficient. Water was fed into the anolyte stream. The overflow from this stream was about 0.35 N in nitric acid and contained about 45 ppm of aluminum. The potential drop across the unit was 3.75 volts at the current density of 60 ma/cm$^2$ at which the run was conducted. Based on the product acid deficiency the current efficiency was about 90%, while based on the nitric acid produced it was 60 to 65%. This discrepancy had been observed in the initial experiments and probably indicates that some nitrate is being reduced at the cathode in a reaction that consumes more than one hydrogen ion equivalent per faraday.

Tests on various electrode materials showed that platinum and Tirrelloy*

*An anode of properties similar to platinum.

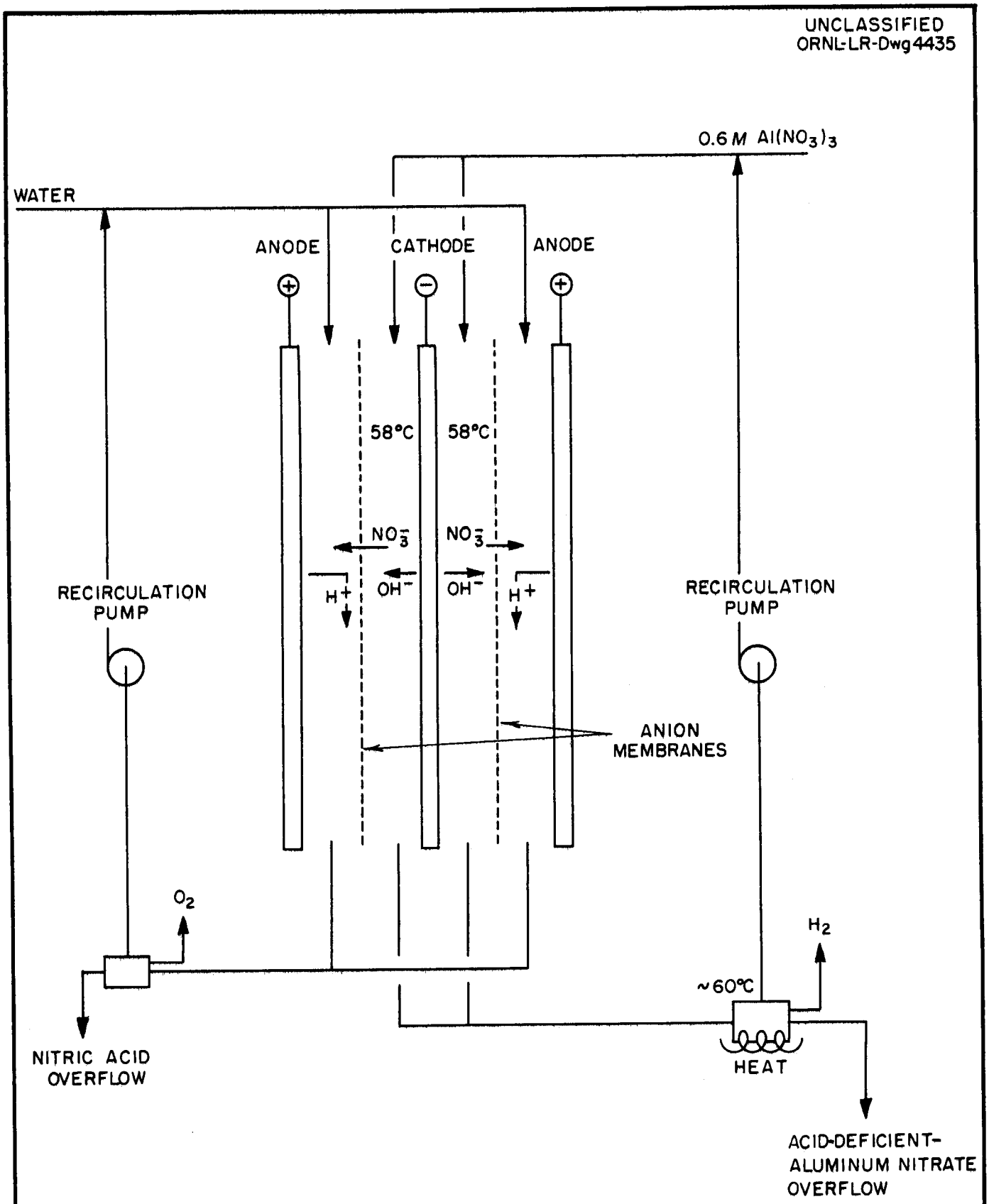


Fig. 7. 5. Preparation of Acid-Deficient Aluminum Nitrate by Electrodialysis.

are the only satisfactory anodes for this cell. Tirrelloy is acceptable only if protected by a sulfuric acid anolyte, as described in Sec. 3.1. In 0.25 N nitric acid at 30 ma/cm$^2$, a 0.001-in. platinum anode corroded at approximately 0.075 mg/amp-hr, which corresponds to a life of less than one year; unprotected Tirrelloy lasted less than six days. In a separate sulfuric acid anode cell, lead or a lead alloy may be used if the cation membrane is sufficiently efficient to maintain the nitrate leakage into the anode cell to a negligible amount.

## 7.5 Separation of Hydrogen and Deuterium by a Palladium Diaphragm

The hydrogen-deuterium experiments were carried out with 1 M lithium hydroxide electrolyte. The lithium hydroxide was purified previous to the experiments by electrolyzing with palladium electrodes. The cell was 9 by 9 in. and had a platinum anode and a stainless steel cathode. Dynel cloth separated the palladium diaphragm from the electrodes. The electrode gases were prevented from reaching the palladium diaphragm by the Dynel cloth and by flowing the solution through this cloth toward the electrodes.

## 7.6 Separation of Uranyl Sulfate from Sulfuric Acid

Two experiments were carried out on deacidification of uranyl sulfate in a combination cation-anion fractionation still with three cation membranes in the hydrogen-enriching section and three anion membranes in the sulfate-enriching section. The original total sulfate concentration was approximately 1 M and the sulfate-to-uranium mole ratio was 2.0. At a sulfuric acid reflux ratio of 0.60, 74% of the acid was removed and 10% of the uranium was moved into the acid. At a reflux ratio of 0.80, 61% of the acid was removed with 4% uranium present in the acid.

From the data obtained in these two runs, it was estimated that to removed 98% of the acid with a 2% transfer of uranium to the acid would

require a unit containing six anion and three cation membranes. Power consumption would be of the order of 10 to 15 kwhr per pound of uranium. A separation factor of 28 was obtained during transfer of hydrogen and uranyl ions through the Nepton CR-61 cation membranes and one of 3.5 during transfer of sulfate and negative uranyl sulfate complexes through a Nepton AR-110 anion membrane at a current density of 75 $ma/cm^2$. This is in agreement with a separation factor of 3.7 to 4.3 obtained in similar experiments* for the anion membrane at current densities of 7 and 50 $ma/cm^2$.

---

*D. O. Campbell, Chemical Technology Division, ORNL, personal communication.