[redacted]

CENTRAL RESEARCH LIBRARY
DOCUMENT COLLECTION

AEC RESEARCH AND DEVELOPMENT REPORT

ORNL-1854
Chemistry-Separation Processes
for Plutonium and Uranium

MARTIN MARIETTA ENERGY SYSTEMS LIBRARIES
3 4456 0349816 9

4 A

DETERMINATION OF PLUTONIUM AND URANIUM IN SCRUP DISSOLVER SOLUTIONS

R. W. Foster
J. H. Cooper

DECLASSIFIED

CLASSIFICATION CHANGED TO:
BY AUTHORITY OF: TID-1234
BY: N. Bowman 9/8/60

CENTRAL RESEARCH LIBRARY
DOCUMENT COLLECTION

LIBRARY LOAN COPY

DO NOT TRANSFER TO ANOTHER PERSON

If you wish someone else to see this document, send in name with document and the library will arrange a loan.

OAK RIDGE NATIONAL LABORATORY
OPERATED BY
CARBIDE AND CARBON CHEMICALS COMPANY
A DIVISION OF UNION CARBIDE AND CARBON CORPORATION
UCC
POST OFFICE BOX P
OAK RIDGE, TENNESSEE

[redacted]

[redacted]

[redacted]

ORNL 1854

[redacted]

This document consists of 30 pages.
Copy 4 of 201 copies. Series A.

Contract No. W-7405-eng-26

ANALYTICAL CHEMISTRY DIVISION

M. T. Kelley, Director
C. D. Susano, Associate Director

DETERMINATION OF PLUTONIUM AND URANIUM IN SCRUP DISSOLVER SOLUTIONS

R. W. Foster[a]
J. H. Cooper

Edited by:

H. P. Raaen

Date Issued:

JUL 1 1955

(a) Present Address, E. I. du Pont de Nemours and Co., Inc., Savannah River Plant, Augusta, Ga.

[redacted]

OAK RIDGE NATIONAL LABORATORY
Operated by
CARBIDE AND CARBON CHEMICALS COMPANY
A Division of Union Carbide and Carbon Corporation
Post Office Box P
Oak Ridge, Tennessee

[redacted]

MARTIN MARIETTA ENERGY SYSTEMS LIBRARIES

3 4456 0349816 9

INTERNAL DISTRIBUTION

1. C. E. Center
2. Biology Library
3. Health Physics Library
4-5. Central Research Library
6. Reactor Experimental Engineering Library
7-13. Laboratory Records Department
14. Laboratory Records, ORNL R.C.
15. C. E. Larson
16. L. B. Emlet (K-25)
17. J. P. Murray (Y-12)
18. A. M. Weinberg
19. E. H. Taylor
20. E. D. Shipley
21. F. C. VonderLage
22. M. T. Kelley
23. C. P. Keim
24. J. H. Frye, Jr.
25. W. H. Jordan
26. J. A. Swartout
27. F. L. Culler
28. S. C. Lind
29. A. H. Snell
30. A. Hollaender
31. G. H. Clewett
32. K. Z. Morgan
33. T. A. Lincoln
34. A. S. Householder
35. R. S. Livingston
36. D. S. Billington
37. C. E. Winters
38. D. W. Cardwell
39. E. M. King
40. D. D. Cowen
41. J. A. Lane
42. M. J. Skinner
43. G. E. Boyd
44. L. T. Corbin
45. P. F. Thomason
46. J. H. Cooper
47. H. K. Jackson
48. W. H. Lewis
49. F. L. Moore
50. H. P. Raaen
51. R. W. Dodson (consultant)
52. H. Eyring (consultant)
53. J. W. Kennedy (consultant)
54. R. H. Muller (consultant)
55. N. H. Furman (consultant)
56. G. T. Seaborg (consultant)
57-58. ORNL Document Reference Library, Y-12 Branch

EXTERNAL DISTRIBUTION

59. American Locomotive Company
60. American Machine and Foundry Company
61-66. Argonne National Laboratory
67. Armed Forces Special Weapons Project (Sandia)
68. Armed Forces Special Weapons Project, Washington
69-71. Atomic Energy Commission, Washington
72. Babcock and Wilcox Company
73. Bendix Aviation Corporation
74. Bethlehem Steel Company
75. Bettis Plant (WAPD)
76-78. Brookhaven National Laboratory
79. Bureau of Ships
80. Carbide and Carbon Chemicals Company (K-31 Plant)
81-83. Carbide and Carbon Chemicals Company (K-25 Plant)
84. Chicago Patent Group
85. Combustion Engineering, Inc.

86. Commonwealth Edison Company
87. Consumers Public Power District
88. Detroit Edison Company
89. Dow Chemical Company (Rocky Flats)
90-93. duPont Company, Augusta
94. duPont Company, Wilmington
95. Foster Wheeler Corporation
96. General Electric Company (APS)
97-104. General Electric Company, Richland
105. Goodyear Atomic Corporation
106. Hanford Operations Office
107. Iowa State College
108. Kaiser Engineers
109-111. Knolls Atomic Power Laboratory
112-113. Los Alamos Scientific Laboratory
114. Massachusetts Institute of Technology (Benedict)
115. Monsanto Chemical Company
116. Mound Laboratory
117. Naval Research Laboratory
118. Newport News Shipbuilding and Dry Dock Company
119. New York Operations Office
120-121. North American Aviation, Inc.
122. Pacific Northwest Power Group
123. Patent Branch, Washington
124. Pennsylvania Power and Light Company
125-128. Phillips Petroleum Company (NRTS)
129. Seminole Electric Co-Operative, Inc.
130-131. University of California Radiation Laboratory, Berkeley
132-133. University of California Radiation Laboratory, Livermore
134. Vitro Engineering Division
135. Westinghouse Electric Corporation (IAPG)
136-200. Technical Information Service, Oak Ridge
201. Division of Research and Medicine, AEC, ORO

[redacted]

TABLE OF CONTENTS

		Page
0.	Abstract	1
1.	Introduction	2
2.	Summary	3
3.	Discussion	4
	3.1 Preparation of Scrup Dissolver Solutions	4
	3.2 Determination of Plutonium in Scrup Dissolver Solutions	4
	3.3 Determination of Uranium in Scrup Dissolver Solutions	8
	3.4 Decontamination of Plutonium and Uranium from Fission Products	10
4.	Acknowledgement	12
	Appendices	13
	I. Procedure for Determination of Plutonium in Scrup Dissolver Solutions	13
	II. Procedure for Determination of Uranium in Scrup Dissolver Solutions	20
	III. Procedure for Preparation of Dowex A-1 Resin	23
	References	24

[redacted]

[redacted]

LIST OF FIGURES

Number	Title	Page
1	Resin Column for Plutonium Isolation	14
2	Extraction Vessel	15
3	Mercury Cathode Assembly	18
4	Resin Column for Uranium Isolation	21

[redacted]

[redacted]

[redacted]

LIST OF TABLES

Number	Title	Page
1	Composition Range of Scrup Dissolver Solutions	5
2	Evaluation of Data Secured for Determination of Plutonium in Synthetic Scrup Dissolver Solutions	7
3	Evaluation of Data Secured for Determination of Uranium in a Synthetic Scrup Dissolver Solution	9
4	Results of Decontamination of Scrup Dissolver Solutions	11

[redacted]

[redacted]

0. Abstract

Methods for the determination of plutonium and uranium in highly radioactive scrup dissolver solutions have been developed. Plutonium was separated from the dissolver solutions by solvent-extraction and ion-exchange techniques and determined by potentiometric titration. Uranium was separated by ion exchange and determined by potentiometric titration. Solutions that were similar to the actual dissolver solutions and that contained known amounts of plutonium and uranium were analyzed by these methods.

Evaluation of the data secured for the determination of plutonium and uranium by the methods given herein indicated that, within the limits of the precision of the methods, there was no bias. The precision of the data obtained for the determination of plutonium, expressed as the relative standard deviation, was better than 2 % for plutonium in the concentration range of 0.27 to 0.64 mg/ml. The precision for uranium was estimated to be about 0.2 % for uranium concentrations of 425 mg/ml. These methods and the data obtained by them are discussed in this report; the procedures are appended.

[redacted]

[redacted]

1. Introduction

The United States Atomic Energy Commission has agreed to buy from the Atomic Energy Commission of Canada, Limited, the plutonium contained in uranium rods that have been irradiated in the Chalk River reactor. This requires that the concentration of plutonium in these rods be determined with a high degree of precision and, insofar as possible, without any bias. Because the specific activities of the various isotopes of plutonium are different, the conventional alpha-counting methods cannot be used for accurate plutonium determinations. Reliable uranium values are also necessary because the uranium values are to be used for the estimation of the theoretical plutonium content of the irradiated uranium rods and for the accountability of plutonium and uranium.

Analytical methods for the determination of uranium and plutonium are available;[3,4] however, the high radioactivity and interferences (principally iron) in the Scrup dissolver solutions necessitate special procedures for isolating and purifying the uranium and plutonium. The separation techniques were developed from studies of synthetic dissolver solutions that were similar in composition to the actual dissolver solutions. Estimates of precision and bias were calculated from the data secured by the analyses of the synthetic solutions. All decontamination data were obtained by analysis of the radioactive Scrup dissolver solutions.

[redacted]

[redacted]

2. Summary

Analytical methods for the determination of the total plutonium and uranium in Chalk River dissolver solutions have been developed. These methods should be applicable to most dissolver solutions that have been prepared by dissolving irradiated uranium slugs in nitric acid according to the Purex process flowsheet No. 3[2] or to modifications thereof.

Plutonium can be extracted into a 1.0 M solution of thenoyltrifluoroacetone (TTA) in xylene[6] from radioactive dissolver solutions and thereby be separated from 90% of the fission-product radioactivity. The chief interference in the determination of plutonium is iron, which extracts with plutonium from the dissolver solution into the TTA solution. The major portion of the iron was removed by complexing it with diisopropyl ether[5] and stripping the plutonium from the TTA solution with 10 M HCl, thus leaving the iron in the organic phase. Any contaminant iron that was present in the plutonium solution was then removed by mercury-cathode electrolysis.

Uranium is quantitatively retained on Dowex A-1 resin and is thereby separated from plutonium and fission products.[1] The uranium is eluted from the resin and titrated. Iron does not interfere with the titration of uranium; therefore no effort was made to remove iron. An overall fission-product beta-gamma decontamination factor of greater than 50 was achieved in the uranium separations.

[redacted]

[redacted]

3. Discussion

3.1 Preparation of Scrup Dissolver Solutions

The Chalk River fuel units, solutions of which (Scrup dissolver solutions) must be analyzed, are 10 ft x 1 in. rods of natural uranium that are irradiated in the heavy-water-moderated reactor at Chalk River, Ontario, Canada. After irradiation, the rods are sheared into ten 1-ft. lengths at the reactor site and are shipped to the Oak Ridge National Laboratory in that form. The rods are dissolved in nitric acid according to the standard dissolving methods of the Purex process flowsheet No. 3.[2] Samples of the dissolver solutions are submitted to the Analytical Chemistry Division for the determination of uranium and plutonium.

3.2 Determination of Plutonium in Scrup Dissolver Solutions

Because of the neutron-flux pattern of the Chalk River reactor, the plutonium concentration and isotopic ratio vary throughout the length of a fuel unit. The plutonium concentration is highest (more than 1000 g of plutonium per ton of uranium) in the center two-foot section of a rod and decreases to less than 100 g per ton at the ends. Plutonium-239 is the major isotope present; the Pu^{240} concentration varies from less than 1% to approximately 7% of the total plutonium. Because the specific activities of these two isotopes are greatly different, the conventional alpha-counting methods cannot be used to determine the plutonium concentration.

[redacted]

[redacted]

In view of this difficulty it was decided to determine the plutonium concentration by the ceric sulfate-potentiometric method;[3] therefore the main consideration was to isolate the plutonium and concentrate the solution of it in order to meet the requirements of the method. The aliquot of plutonium solution for titration by the ceric sulfate-potentiometric method should contain approximately 100 μg of plutonium in 0.5 to 1 M H_2SO_4. The maximum volume that can be tolerated in the titration vessel is 500 μl.

The composition range of the dissolver solutions is shown in Table 1.

Table 1

Composition Range of Scrup Dissolver Solutions

Component	Composition Range
Plutonium	0.03 to 0.4 mg/ml
Nitric Acid	0.5 to 9.4 M
Uranium	16 to 528 mg/ml
Iron	Trace to 0.2 mg/ml

An aliquot of the dissolver solution that was estimated to contain 1 to 1.5 mg of Pu was shaken with TTA solution to extract the plutonium from fission products and from uranium. Diisopropyl ether was mixed with the organic extract, and the plutonium was then stripped into 10 M HCl. The ether and HCl provided the proper conditions[5]

[redacted]

[redacted]

[redacted]

for the separation of the iron from the plutonium. After the plutonium, as Pu(IV), was stripped from the TTA solution, it was reduced to Pu(III) with 0.2 M potassium iodide solution, and the solution was passed through a column of Dowex A-1 resin to remove the small amounts of uranium that had extracted and stripped with the plutonium. The plutonium solution was fumed with sulfuric acid, and the remaining iron was removed from it by mercury-cathode electrolysis. Traces of mercury were complexed by adding zinc granules to the solution. The solution was diluted to a known volume, and an aliquot of it was titrated with ceric sulfate solution in order to determine the plutonium content. The stepwise procedure is given in Apx. I.

Synthetic samples of compositions similar to the estimated compositions of the Scrup dissolver solutions were prepared and analyzed for plutonium by this method. The compositions of the synthetic samples and the results of the analyses of them are shown in Table 2.

The plutonium in the synthetic samples was a known aliquot of a solution of a weighed amount of plutonium metal. The accepted true value of the uranium concentration was determined by a gravimetric analysis.[7]

[redacted]

[redacted]

[redacted]

Table 2

Evaluation of Data Secured for Determination of Plutonium in Synthetic Scrup Dissolver Solutions[a]

Range of Compositions of Synthetic Solutions:

HNO_3, 0.8 to 1.0 M

Fe(III), 0 to 0.25 mg/ml

U(VI), 101 to 426 mg/ml

Sample	Number of Determinations (N)	Plutonium, mg/ml Present (Y)	Plutonium, mg/ml Found Average (X)[b]	Range	Standard Deviation (S), %	Bias $B = E \pm S.E._R$[c]	Comments
A-1	6	0.635	0.624	0.610 to 0.635	2	-1.7 ± 2.1	None
A-2	4	0.626	0.619	0.606 to 0.627	2	-1.1 ± 3.2	None
A-3	6	0.510	0.517	0.509 to 0.526	1	$+1.4 \pm 1.1$	Positive[d]
Scrup	10	0.270	0.269	0.267 to 0.271	0.5	-0.3 ± 0.3	None
Total	26						

(a) These solutions simulated Scrup dissolver solutions except that no fission products were present.

(b) Average of "N" determinations

(c) $E = \frac{(Y - \bar{X}) \times 100}{Y}$ and $S.E._R = tS/\sqrt{N}$

(d) The apparent positive bias is not significant because the quantity of data on which the bias is based is too limited to be of any practical significance.

[redacted]

[redacted]

3.3 Determination of Uranium in Scrup Dissolver Solutions

The major problem in the determination of uranium concentration of the Scrup dissolver solutions was the hazard of the high radioactivity of the samples. It was found that the uranium could be separated from the fission products and plutonium by ion exchange. The procedure consisted of adjusting the sample acidity to 6.5 to 10 M with HCl, reducing the plutonium to the trivalent state with potassium iodide solution, and passing the solution of Pu(III) through a Dowex A-1 resin column. Uranyl ion forms a strong anion complex with the chloride ion, but Pu(III) does not. The uranium remains on the column and the plutonium passes through. The column on which the uranium is adsorbed is washed with 6.5 M HCl, and then the uranium is eluted with 0.1 M HCl. The eluate that contains the uranium is evaporated to near dryness, then fumed to dryness with sulfuric acid; the residue is dissolved in 7.5 vol % sulfuric acid, and the solution is titrated with ferric sulfate solution(4) in order to determine the uranium concentration. The stepwise procedure is given in Apx. II.

A synthetic solution that simulated the Scrup dissolver solutions was prepared and analyzed for uranium according to the procedure of Apx. II. Table 3 shows the composition of the synthetic solution and the results obtained from its analysis.

[redacted]

[redacted]

Table 3

Evaluation of Data Secured for Determination of Uranium in a Synthetic Scrup Dissolver Solution[a]

Composition of the Synthetic Solution (same as Scrup sample of Table 2):

U(VI), 425.70 mg/ml

HNO_3, 1.0 M

Fe(III), 0.25 mg/ml

Pu(IV), 0.270 mg/ml

Uranium Found, mg/ml	
424.98	
424.23	
424.98	Average concentration = 424.83 mg/ml
	Standard deviation = 0.35 mg/ml
424.98	Relative standard deviation = 0.2%
424.98	Bias = none

(a) This solution simulated Scrup dissolver solution except that no fission products were present.

[redacted]

[redacted]

3.4 Decontamination of Plutonium and Uranium from Fission Products

One of the major problems in analyzing the Scrup dissolver solutions was that of obtaining an aliquot relatively free of the beta-gamma activity of fission products. In order to decontaminate plutonium from uranium and from fission products, a separation method was evaluated that employed extraction of the plutonium into a solution of TTA in xylene to separate it from uranium and partially from the fission products, stripping the plutonium into 10 M HCl to condition it for ion exchange, and completing the separation from fission products by ion exchange on Dowex 1-A. In order to separate uranium from fission products, only the ion-exchange separation step was required. Radiochemical analysis of some of the Scrup dissolver solutions at various stages of the separations showed that the fission-product activity was removed from the plutonium and uranium. The radiochemical data are given in Table 4.

[redacted]

[redacted]

Table 4

Results of Decontamination of Scrup Dissolver Solutions

A. By TTA Extraction

Sample	Beta Activity, cpm/ml			Gamma Activity, cpm/ml	
	Gross	Ru	TRE[a]	Zr	Nb
1 (original)	1.73×10^9	7.11×10^7	1.08×10^9	8.80×10^8	1.01×10^9
1 (TTA extract)	2.18×10^8	$<1.3 \times 10^5$	$<1.4 \times 10^4$	9.95×10^8	3.40×10^8
2 (original)	1.26×10^9	5.46×10^7	7.62×10^8	7.20×10^8	1.08×10^9
2 (TTA extract)	1.55×10^8	$<3.3 \times 10^4$	$<1.4 \times 10^4$	6.01×10^8	3.80×10^8
3 (original)	1.06×10^9	9.57×10^7	7.28×10^8	3.55×10^6	6.44×10^6
3 (TTA extract)	8.12×10^5	2.87×10^3	2.86×10^3	3.04×10^6	2.66×10^6

B. By Ion-Exchange on Dowex A-1

Sample	Beta Activity, cpm/ml			Gamma Activity, cpm/ml		
	Gross	Ru	TRE[a]	Gross	Zr	Nb
4 (original)	9.54×10^6	4.92×10^5	6.90×10^6	1.36×10^7	5.22×10^6	7.15×10^6
4 (resin eluate)	1.83×10^5	2.18×10^3	4.24×10^2	5.84×10^6	5.87×10^5	5.55×10^6

(a) TRE = total rare earths.

The data show that in the TTA extraction of plutonium only 10 % of the original beta activity was carried with the plutonium, but 90 % of the gamma activity was carried. However, in the subsequent ion-exchange separation over 50 % of the gamma activity and over 80% of the beta activity that was present in the influent was removed.

[redacted]

[redacted]

4. Acknowledgement

Members of the Analytical Chemistry Division helped in the development of these methods. The study was under the direct supervision of L. T. Corbin. The mercury cathode procedure was developed by P. F. Thomason and F. J. Miller. D. Madinabeitia[a] and S. R. Dinsmore aided in the laboratory experiments.

(a) On loan from the E. I. du Pont de Nemours and Co., Inc.

[redacted]

[redacted]

Appendix I

Procedure for Determination of Plutonium in Scrup Dissolver Solutions

Preliminary Steps

1. Determine the acid normality of the sample (see Method Nos. 9 04220 and 9 052200, "Free Acid in Purex Process Solutions", ORNL Master Analytical Manual, ORNL CF-53-1-235, Vols. I and III.)

2. Estimate the plutonium concentration by a gross-alpha determination (see Method Nos. 9 002301 and 9 0733000, "Gross Alpha", ORNL Master Analytical Manual, ORNL CF-53-1-235, Vols. I and III.)

3. Condition Dowex A-1 resin according to procedure given in Apx. III.

4. Make a resin column of the type shown in Fig. 1.

Procedure

1. Into an extraction vessel of the type shown in Fig. 2, pipet an aliquot of the dissolver solution that is estimated to contain 1 mg of Pu.

2. Adjust the acid normality to 1.8 to 2.0 **N** by adding nitric acid or sodium hydroxide; the total volume should not exceed 12 ml.

3. Add 250 µl of 5 M hydroxylamine hydrochloride solution.

4. Stir the solution for five minutes at high speed by means of an electric stirrer.

[redacted]

UNCLASSIFIED
DWG. 17085 A

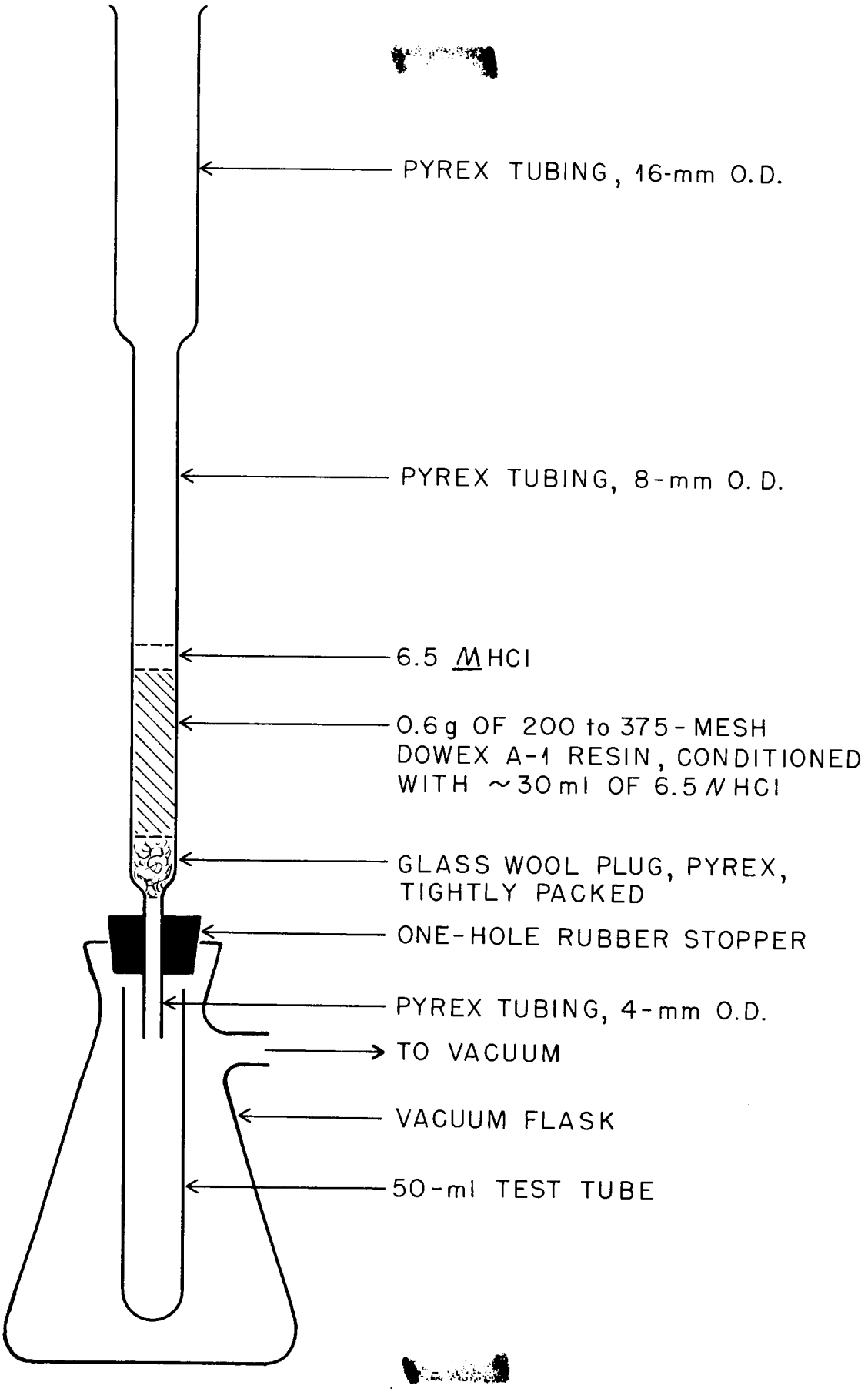

FIG. 1 RESIN COLUMN FOR PLUTONIUM ISOLATION

UNCLASSIFIED
DWG. 17086 A

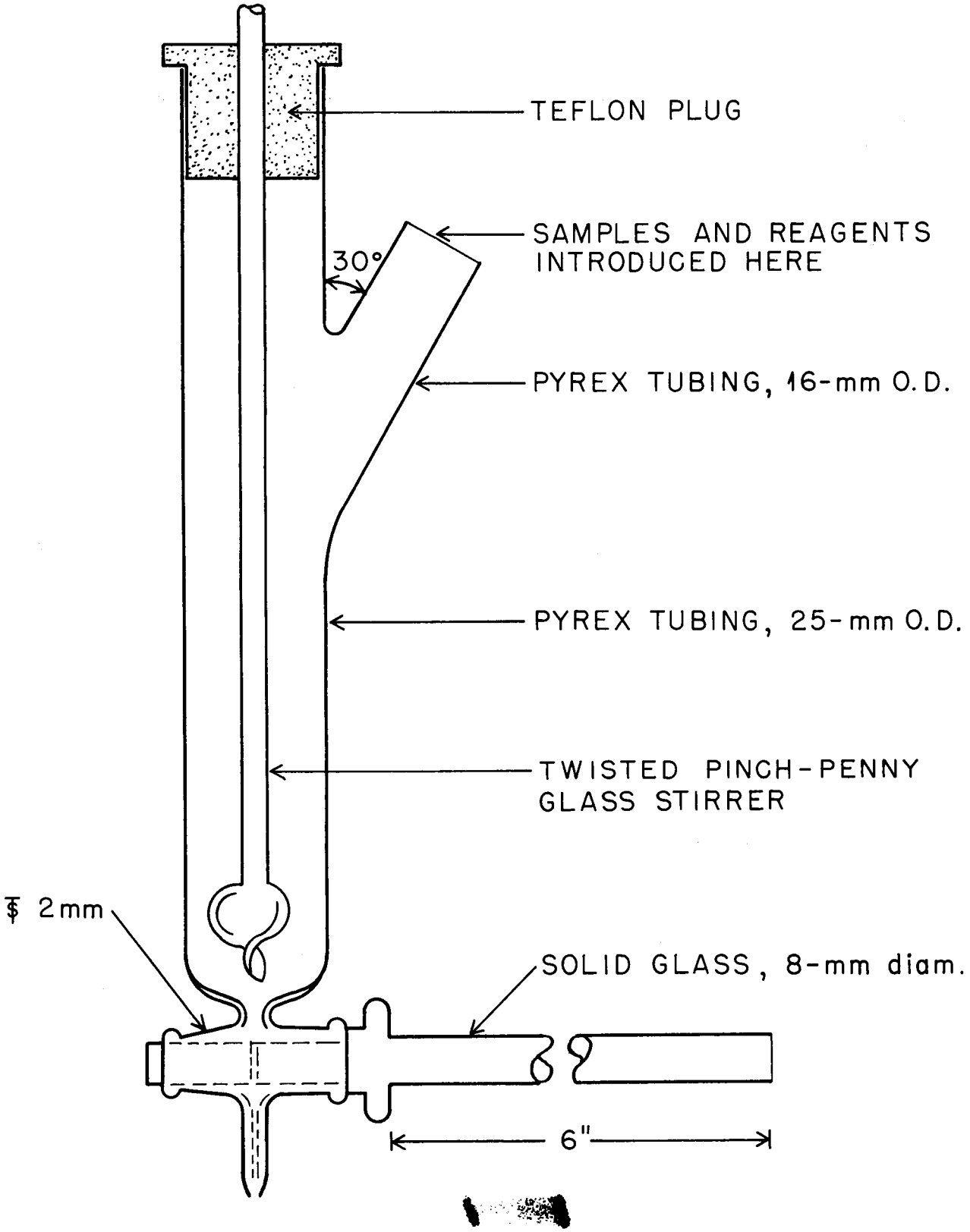

FIG. 2 EXTRACTION VESSEL

[redacted]

5. Reduce the stirrer speed to two to four rps and slowly add 1 ml of 3 M sodium nitrite solution; stir for five minutes.

6. Add 5 ml of a 1.0 M solution of TTA in xylene and stir rapidly for 45 minutes.

7. Discontinue the stirring, allow the phases to separate, and discard the aqueous phase.

8. Add 3 ml of water to the TTA solution and stir rapidly for three minutes.

9. Repeat Steps 7 and 8 twice, then repeat Step 7 again.

10. Add 5 ml of diisopropyl ether to the extraction vessel and stir rapidly for three minutes.

11. Add 3 ml of 10 M HCl to the extraction vessel and stir rapidly for 10 minutes.

12. Discontinue the stirring, allow the phases to separate, and drain the aqueous layer into a graduated 15-ml centrifuge cone.

13. Repeat Steps 11 and 12.

14. Add 0.2 M potassium iodide solution to the centrifuge cone until the total volume is 9.2 ml.

15. Place the centrifuge cone in a 70 to 80 °C water bath for 15 minutes. Stir the solution occasionally with a platinum wire.

16. Remove the cone from the bath and cool the solution to below 50 °C in a beaker of cold water.

[redacted]

[redacted]

17. Rinse the contents of the cone onto a Dowex A-1 resin column with three 1-ml portions of 6.5 M HCl.

18. Pass the sample solution through the resin bed at the rate of approximately 1 ml per min. Wash the column with 10 to 15 ml of 6.5 M HCl, collecting all the effluent solution in a 50-ml test tube.

Caution: Never allow the resin bed to become dry.

19. Rinse the effluent solution into a 30-ml beaker with five or six 1-ml portions of 6.5 M HCl.

20. Place the beaker under an infrared lamp and evaporate the effluent solution to a volume of approximately 1 ml.

21. Add 3 ml of 10 M HNO_3 to the beaker and evaporate the solution to a volume of approximately 1 ml under an infrared lamp.

22. Repeat Step 21.

23. Add 3 ml of 9 M H_2SO_4 to the beaker and evaporate the solution to a volume of approximately 1 ml on an electric hot plate.

24. Repeat Step 23, allowing the sample volume to be reduced to approximately 200 µl.

25. Dilute the solution to 12 to 15 ml with distilled water, and totally submerge into the solution a mercury cathode of the type shown in Fig. 3.

26. Using a platinum wire as the anode, electrolyze the solution at 0.8 amperes for 45 minutes; use a Fisher Powerhouse as the current source.

[redacted]

UNCLASSIFIED
DWG. 17087A

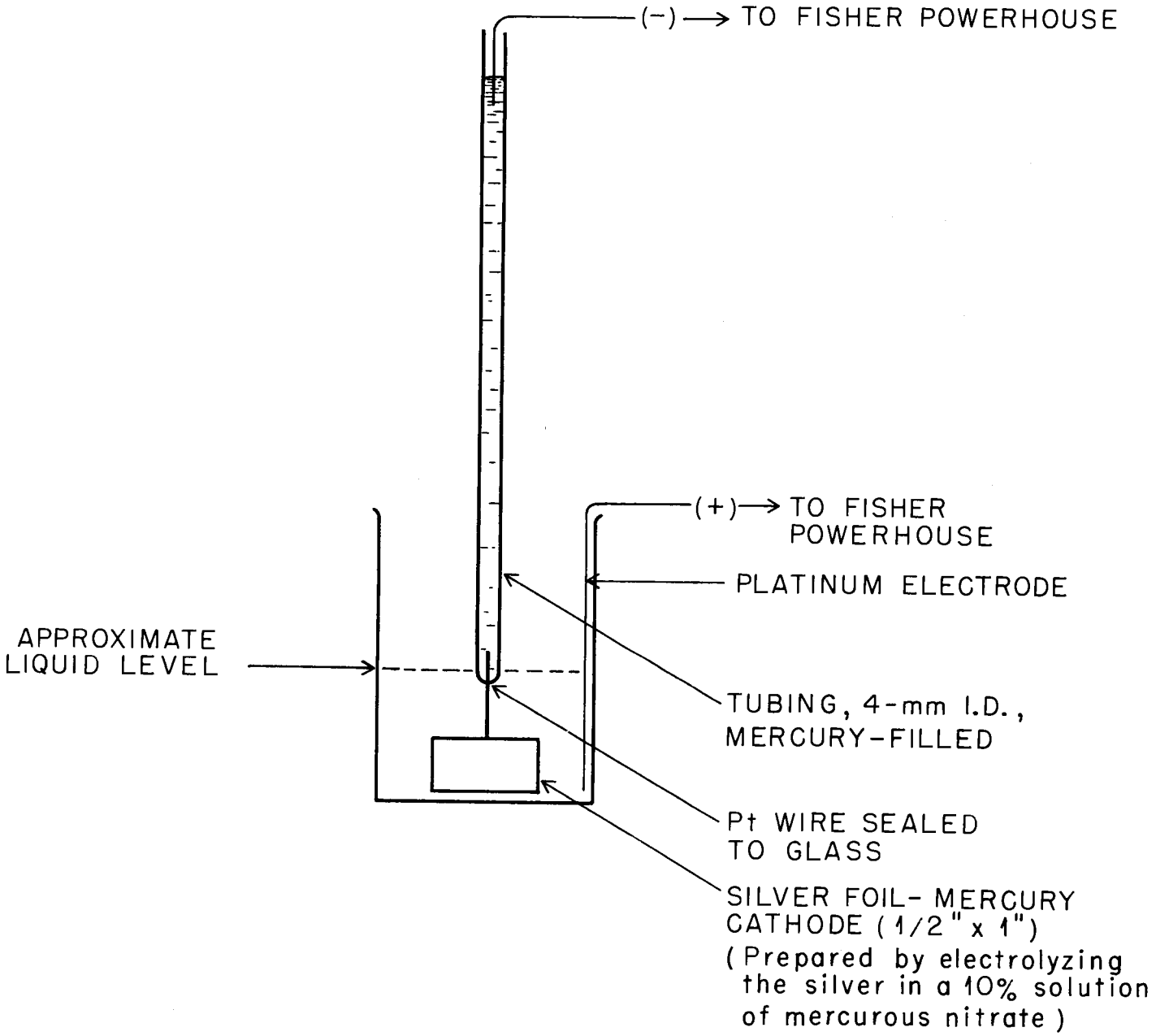

FIG.3 MERCURY CATHODE ASSEMBLY

[redacted]

27. With the current on, remove the cathode from the solution and rinse it with distilled water; catch the rinsings in the beaker.

28. Place the beaker under an infrared lamp and reduce the volume of the solution to approximately 500 µl.

29. Transfer the sample to a 5-ml volumetric flask, wash the beaker with small portions of distilled water and add the rinsings to the flask until the solution level is approximately 1/4 inch below the graduation mark.

30. Boil three or four pieces of 10-mesh zinc in 10 vol % H_2SO_4 and rinse the pieces with distilled water. Place the zinc in the flask and shake thoroughly. Allow the solution to stand in contact with the zinc overnight. Caution: Leave the flask unstoppered while it is standing overnight.

31. Dilute the solution to volume and shake it thoroughly. Titrate a 500-µl aliquot according to the procedure in Method No. 9 0432620, "Plutonium, Potentiometric Ceric Sulfate Method", ORNL Master Analytical Manual, ORNL CF-53-1-235, Vols. I and III.

[redacted]

[redacted]

Appendix II

Procedure for Determination of Uranium in Scrup Dissolver Solutions

Preliminary Steps

1. Condition Dowex A-1 resin according to the procedure in Apx. III.

2. Make a resin column of the type shown in Fig. 4.

Procedure

1. Onto the resin column, pipet an aliquot of the Scrup dissolver solution that is estimated to contain 100 mg of U.

2. Add 250 µl of 1.0 M potassium iodide solution to the column.

3. Add sufficient conc. HCl to make the solution on the column 6.5 M HCl.

4. Allow the solution on the column to stand 15 minutes to reduce the Pu(IV and VI) to Pu(III).

5. Fill the column with 6.5 M HCl solution to within 1/2 inch of the top.

6. By suction, allow the solution to pass through the resin at a rate of approximately 1 ml per minute.

7. Wash the column with 6.5 M HCl until the volume of effluent is approximately 30 ml. Never allow the resin to become dry.

8. Discard the effluent solution to "hot" waste. Caution: The effluent solution is highly radioactive.

[redacted]

UNCLASSIFIED
DWG. 17084 A

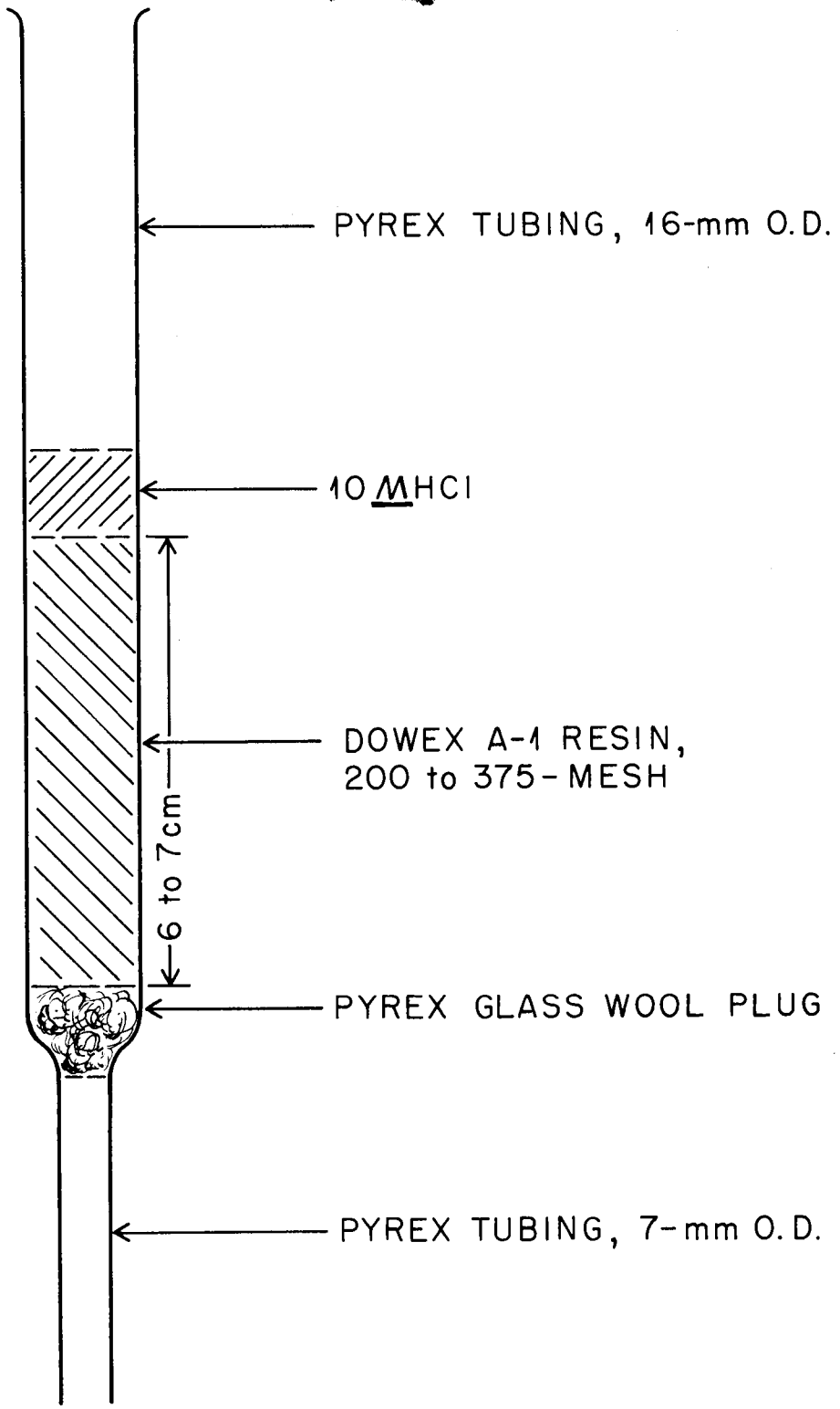

FIG. 4 RESIN COLUMN FOR URANIUM ISOLATION

[redacted]

9. Elute the uranium from the resin column into a 200-ml tall-form beaker with 40 to 50 ml of 0.1 M HCl (Note a).

10. Place the beaker on a hot plate and evaporate the eluate to a volume of approximately 1 ml.

11. Add 5 ml of conc. H_2SO_4 and fume the solution to dryness on a hot plate.

12. Dissolve the residue in 100 ml of 7.5 vol % H_2SO_4 and titrate the solution according to Method Nos. 1 219222 and 9 00719222, "Uranium, Potentiometric Ferric Sulfate Method" (8-3-53), ORNL Master Analytical Manual, starting with Step 4 of Section VIII-B, Procedure, "Analysis of Sample".

Notes

a. A convenient apparatus for collecting the eluate can be made by placing a two-hole rubber stopper in the 200-ml tall-form beaker, inserting the resin column into one hole, and attaching the vacuum line to the other hole. When vacuum is applied, the eluate drains directly into the beaker.

[redacted]

[redacted]

Appendix III

Procedure for Preparation of Dowex A-1 Resin

1. Take 2 liters of wet Dowex A-1 resin from the container in which it is received and decant the water.

2. Slurry the resin in acetone and vacuum-filter it through Whatman No. 1 filter paper.

3. Spread the resin on blotter paper and allow it to air dry overnight.

4. Screen the resin and save that which is of 200- to 325-mesh size.

5. Slurry the resin of selected particle size in each of the following solutions in the order listed; filter the slurry after each slurrying:

   a. absolute ethanol

   b. water

   c. 6.0 M HCl

   d. water

   e. 5.0 M NaOH

   f. water

   g. 6.0 M HCl

   h. 6.5 M HCl

   i. water

6. Air-dry the resin and keep in this form for use.

[redacted]

[redacted]

References

1. W. A. Brooksbank, H. A. Parker, and W. T. Mullins, "Plutonium Separation by Ion Exchange", Analytical Chemistry Division Quarterly Progress Report for Period Ending December 26, 1951, ORNL-1233, p. 33-34. (Classified)

2. J. M. Chandler, J. C. Eargle, J. W. Ullman, and E. J. Weber, "ORNL Purex Pilot Plant Data Manual", CF-52-2-189, (no date). (Classified).

3. J. H. Cooper, Method No. 9 0432620, "Plutonium, Potentiometric Ceric Sulfate Method," August 7, 1953, ORNL Master Analytical Manual, CF-53-1-235, Vols. I and III. (Classified).

4. J. H. Cooper, Method Nos. 1 219222 and 9 00719222, "Uranium, Potentiometric Ferric Sulfate Method", August 3, 1953, ORNL Master Analytical Manual.

5. I. M. Kolthoff and E. B. Sandell, Textbook of Quantitative Inorganic Analysis, Rev. ed., p. 91, Macmillan, 1943.

6. F. L. Moore, "Plutonium SCRUP Program", Analytical Chemistry Division Quarterly Progress Report for Period Ending December 26, 1951, ORNL-1233, pp. 34-35. (Classified).

7. P. F. Thomason, Method Nos. 1 219250 and 9 00719250, "Uranium, Gravimetric Ammonium Hydroxide Method", ORNL Master Analytical Manual.

[redacted]