[redacted]

CENTRAL RESEARCH LIBRARY
DOCUMENT COLLECTION

AEC RESEARCH AND DEVELOPMENT REPORT

ORNL-1851
Progress

MARTIN MARIETTA ENERGY SYSTEMS LIBRARIES
3 4456 0349824 9

DECLASSIFIED
CLASSIFICATION CHANGED TO:
BY AUTHORITY OF: AEC 7-12-60
BY: N. Bauman 8/26/60

SOLID STATE DIVISION

SEMIANNUAL PROGRESS REPORT

FOR PERIOD ENDING FEBRUARY 28, 1955

CENTRAL RESEARCH LIBRARY
DOCUMENT COLLECTION
LIBRARY LOAN COPY
DO NOT TRANSFER TO ANOTHER PERSON
If you wish someone else to see this document, send in name with document and the library will arrange a loan.

OAK RIDGE NATIONAL LABORATORY
OPERATED BY
CARBIDE AND CARBON CHEMICALS COMPANY
A DIVISION OF UNION CARBIDE AND CARBON CORPORATION
UCC
POST OFFICE BOX P
OAK RIDGE, TENNESSEE

[redacted]

[redacted]

[redacted]

ORNL 1851

Thi do m t o t of 36 p g

Copy 9 / of 214 cop es S e A

Contract No W 7405 eng 26

SOLID STATE DIVISION

SEMIANNUAL PROGRESS REPORT

For Period Ending February 28 1955

D S Billington Director

J H Crawford Jr Assistant Director

Edited by
J T Howe

DATE ISSUED

APR 22 1955

OAK RIDGE NATIONAL LABORATORY
Operated by
CARBIDE AND CARBON CHEMICALS COMPANY
A Division of Union Carbide and Carbon Corporatio
Post Office Box P
Oak Ridge Tenne see

[redacted]

3 4456 0349824 9

[redacted]

[redacted]

[redacted]

[redacted]

INTERNAL DISTRIBUTION

1 C D Baumann
2 R G Berggren
3 J O Betterton Jr
4 D S Billington
5 [illegible] Binder
6 T [illegible] Blewitt
7 C D Bopp
8 B S Bue
9 G E Boyd
10 E J Boyle
11 H Brooks (consultant)
12 W E Browning
13 W E Brundage
14 D W Cardwell
15 C E Center
16 R A Charpie
17 J W Cleland
18 G H Clewett
19 A F Cohen
20 D D Cowen
21 J H Crawford Jr
22 F L Culler
23 J E Cunningham
24 S E Dismuke
25 L B Emlet (K 25)
26 M J Feldman
27 J H Frye Jr
28 J L Gabbard
29 R J Gray
30 W O Harms
31 C S Harrill
32 A Hollaender
33 D K Holmes
34 A S Householder
35 J T Howe
36 L [illegible] Jetter
37 R [illegible] Johnson
38 R J Jones
39 [illegible] H Jordan
40 G W Keilholtz
41 C P Keim
42 M T Kelley
43 R H Kernohan
44 E M King
45 H V Klaus
46 G E Klein
47 C E Larson
48 T [illegible] Lincoln
49 S [illegible] Lind
50 R S Livingston
51 [illegible] G MacPherson (consultant)
52 W D Manly
53 A J Miller
54 E C Miller
55 [illegible] G Morgan
56 K Z Morgan
57 E J Murphy
58 J P Murray (Y 12)
59 R B Oliver
60 W W Parkinson
61 P M Reyling
62 M T Robinson
63 H C Schweinler
64 F Seitz (consultant)
65 E D Shipley
66 O Sisman
67 M J Skinner
68 G P Smith
69 A H Snell
70 R L Sproull (consultant)
71 E E Stansbury
72 D K Stevens
73 W J Sturm
[illegible] C D Susano
75 [illegible] A Swartout
76 [illegible] H Taylor
77 J [illegible] Trice
78 F C VonderLage
79 J M [illegible]de
80 C C We[illegible]ter
81 M S Wech[illegible]er
82 R A Weeks
83 A M Weinberg
84 E P Wigner (consultant)
85 G C Williams
86 W R Willis
87 J C Wilson
88 C E Winters
89 M C Wittels
90 Biology Library
91 93 Central Research Library
94 Health Physics Library
95 99 Laboratory Records Department
100 Laboratory Records ORNL R C

[redacted]

[redacted]

101 ORNL Document Reference Library Y 12
102 Reactor Experimental Engineering Library

EXTERNAL DISTRIBUTION

103 AF Plant Representative Wood Ridge
104 American Machine and Foundry Company
105 AMP Project Office Fort Worth
106 113 Argonne National Laboratory
114 Armed Forces Special Weapons Project Sandia
115 Armed Forces Special Weapons Project Washington
116 Army Chemical Center
117 120 Atomic Energy Commission Washington
121 Babcock and Wilcox Company
122 Battelle Memorial Institute
123 Bendix Aviation Corporation
124 127 Bettis Plant (WAPD)
128 130 Brookhaven National Laboratory
131 Bureau of Ships
132 Chicago Patent Group
133 134 Commonwealth Edison Company
135 Detroit Edison Company
136 Directorate of Research (WADC)
137 140 duPont Company Augusta
141 Duquesne Light Company
142 Engineer Research and Development Laboratories
143 Foster Wheeler Company
144 146 General Electric Company (ANPD)
147 General Electric Company (APS)
148 155 General Electric Company Richland
156 Hanford Operations Office
157 Headquarters Air Force Special Weapons Center
158 Iowa State College
159 Kaiser Engineers
160 163 Knolls Atomic Power Laboratory
164 165 Los Alamos Scientific Laboratory
166 Materials Laboratory (WADC)
167 Monsanto Chemical Company
168 169 Mound Laboratory
170 National Advisory Committee for Aeronautics Cleveland
171 Naval Research Laboratory
172 Newport News Shipbuilding and Dry Dock Company
173 New York Operations Office
174 176 North American Aviation Inc
177 Nuclear Development Associates Inc
178 Nuclear Metals Inc
179 Pacific Northwest Power Group
180 Patent Branch Washington
181 Pennsylvania Power and Light Company

[redacted]

[redacted]

1[illegible]2	185	Phillips Petroleum Company (NRTS)
[illegible]	186	Powerplant Laboratory (WADC)
[illegible]	187	Pratt and Whitney Aircraft Division (Fox Project)
[illegible]	[illegible]	Sylvania Electric Products Inc
[illegible]	189	Tennessee Valley Authority (Dean)
	190	USAF Project Rand
	191	U.S. Naval Radiological Defense Laboratory
192	193	University of California Radiation Laboratory Berkeley
194	195	University of California Radiation Laboratory Livermore
	196	Vitro Engineering Division
	197	Walter Kidde Nuclear Laboratories Inc
	198	Westinghouse Electric Corporation (IAPG)
199	213	Technical Information Service Oak Ridge
	214	Division of Research and Medicine AEC ORO

[redacted]

[redacted]

Reports previously issued in this series are

ORNL 1025	Period Ending January 31 1951
ORNL 1095	Period Ending April 30 1951
ORNL 1128	Period Ending July 31 1951
ORNL 1214	Period Ending October 31 1951
ORNL 1261	Period Ending January 31 1952
ORNL 1301	Period Ending May 10 1952
ORNL 1359	Period Ending August 10 1952
ORNL 1429	Period Ending November 10 1952
ORNL 1506	Period Ending February 10, 1953
ORNL 1600	Period Ending August 31 1953
ORNL 1667	Period Ending February 28 1954
ORNL-1762	Period Ending August 30 1954

[redacted]

[redacted]

CONTENTS

SUMMARY 1

RADIATION METALLURGY 3

- ANP Creep and Stress Corrosion 3
- HRP Radiation Metallurgy 4
- Hot Metallography 5

ENGINEERING PROPERTIES 7

- LITR Fluoride Fuel Loop 7

FUSED SALTS 13

- Vertical Dynamic Corrosion Loop 13
- Effect of Radiation on Static Corrosion by Fluoride Fuels 18
- Methods for Transferring and Sampling Molten Salts and Irradiated Fuel Materials 22
- Effect of Irradiation on the UF_6 C_7F_{16} System 27
- Plating of Fission Products on Container Walls 27

[redacted]

[redacted]

SOLID STATE DIVISION SEMIANNUAL PROGRESS REPORT

INTRODUCTION AND SUMMARY

This semiannual progress report and future reports will be published as two documents to permit a wider distribution of the unclassified material The report numbers are assigned in sequence so that the two reports will fall together when filed by report number

RADIATION METALLURGY

ANP Creep and Stress Corrosion The stress corrosion apparatus was operated satisfactorily in hole HB 3 of the LITR The fuel chamber contained ANP fuel No 41 and was surrounded by sodium for heat transfer Temperature fluctuations did not exceed 10°F at any time and for the greater part of the test were less than 5°F The sample chamber was at control temperature (1500°F) for 1120 hr during which period the reactor ran at full power for 700 hr A stress of 1000 psi caused no gross increase in creep rate

A simpler tube burst type of stress corrosion apparatus is under investigation This design consists of a tubular sample under stress by gas pressure on the inside and in contact with fuel salts on the outside The salt in contact with the specimen will be at 1500°F the maximum temperature of the salt this is distinguished from previous designs in which the specimen surface at 1500°F was in contact with the coolest portion of the salt There will also be a lower surface to volume ratio in the new design

Two bench tests on Inconel tubes filled with salt No 44 surrounded by helium and stressed in bending at 1500°F for 432 and 866 hr respectively tentatively confirm the hypothesis that the phenomenon should be termed strain rate or strain corrosion rather than stress corrosion

HRP Radiation Metallurgy A series of pre and postirradiation tests are being conducted to determine the effect of temperature during irradiation for a large number of materials Irradiations have been made at temperatures of 40 to 185°F and equipment is being designed to permit irradiations up to 600°F A number of steels and stainless steels high purity iron titanium and other special alloys are under study Irradiation has been observed to cause yield points in 2S aluminum and in type 347 stainless steel these observations have caused concern that the yield stress may be strongly strain rate dependent A strong dependence of yield stress on the rate of straining may cause the ductility of these face centered cubic materials to be lowered in a manner not anticipated from their behavior in the unirradiated conditions

Hot Metallography Metallographic studies have been made on ANP corrosion capsules that contained UF_3 and UF_4 on component parts from the HRE and from the HRP in pile loop DD on GE ANP fuel elements on UO_2–stainless steel plates irradiated in the experiment conducted jointly by ORNL Pratt & Whitney and BMI and on stainless steel–UO_2 fuel elements Studies of parts from the ARE and metallographic analyses of fuel elements to be tested for the APPR have been scheduled

ENGINEERING PROPERTIES

LITR Fluoride-Fuel Loop After appropriate laboratory testing and operation with barren salt No 31 the fluoride fuel loop was drained and was installed in hole HB 2 of the LITR where it was again test operated with barren salt before it was charged with 4 86 kg of enriched salt and was operated at 8 to 10 fps (at a Reynolds number of 5000 to 6500) The average total power generation of the fuel with the reactor at full power was found from heater power requirements to be 2800 w which is only about one third the anticipated power and measurements will be made to determine why the estimated and actual powers were so far apart

The loop operated for one month for a total of 645 hr of which 475 was at full reactor power before trouble with a drive belt caused a shutdown The loop tubing will be sectioned and will be examined metallographically

FUSED SALTS

Vertical Dynamic Corrosion Loop An in pile dynamic corrosion loop has been designed for vertical operation in position C 48 of the LITR The necessary tests have been made on the components and the in pile loop has been partially constructed

The loop assembly will be made up of a miniature sump pump a specially built motor for high temperature operation in the reactor and a heat exchanger system Measurements have been made of the reactivity that would be produced by the fuel if a rupture of the loop were to introduce the fuel to the

[redacted]

center of the reactor lattice Optimum thermocouple placement was determined and the maximum error for the worst conditions anticipated (maximum air flow of 10 cfm at minimum reactor power) was found to be 50°C Tests have shown that in case of rupture of the loop the fission gases will be delayed approximately 60 sec by a charcoal trap before they build up to maximum intensity this will allow sufficient time to shut the reactor down with safety Special thermal calculations for reactor safety are also being made

A bench test of the loop has included four freezing and melting cycles in 260 hr of operation at a maximum temperature of 1466°F Since it was possible to freeze and melt the fused salt without causing failure of the loop it is planned to fill the loop before it is inserted in the reactor and then to melt the fuel mixture after the loop is in position

It is planned to operate the first in pile loop at 700 to 800°C with a temperature difference of about 50°C along the length of fuel tube The fuel will flow at a Reynolds number of 3000

Effect of Radiation on Static Corrosion by Fluoride Fuels A total of seven capsules of the UF_3 UF_4 comparison series have been irradiated in the MTR Five of these and two control capsules have been examined metallographically and their contents have been chemically analyzed No significant effects were observed with the exception of very slight intergranular void formation in the Inconel wall of one of the UF_4 capsules Analytical results were obtained for the contents of four MTR UF_4 capsules previously examined No significant changes in chemical composition occurred

A radioassay method was developed and was applied to show that the iron in fuel samples of irradiated capsules is for the most part inert iron which was introduced after irradiation and is not a result of corrosion

Improvements in the MTR capsule irradiating facility include a preassembled cooling air annulus on each capsule which seats into a tapered joint permanently installed in the reactor a new fast acting temperature control panel which maintains more uniform capsule temperatures and an improved thermocouple which is more reproducible and less sensitive to cooling air

Methods for Transferring and Sampling Molten Salts and Irradiated Fuel Materials Facilities have been provided for transferring the dynamic corrosion loop from its shield to cell 6 where it will be sectioned for analysis A small shield has also been provided for removal of waste material

A new metering tank was built to control transfer of fused salts to ±0 5 cc the liquid level indicators are probes that utilize alternating current to avoid electrolytic corrosion A differential pressure indicator gives the pressure difference between the metering tank and the apparatus being filled and liquid nitrogen is used to seal off the flow at the termination of the transfer operation

In order to cut the stainless steel can from the vertical loop and dissect the loop for analysis a metal cutting band saw was modified for remote operation at both the rear and front of the cell Provisions were made to keep the blade clean and to catch all radioactive material and cooling oil Appropriate furnaces are being constructed to melt the fuel from the loop and pump

Effect of Irradiation on the UF_6 C_7F_{16} System Three nickel capsules containing a 20 wt % solution of UF_6 C_7F_{16} were exposed to $1\ 1 \times 10^{17}$ thermal neutrons/cm^2 in the ORNL Graphite Reactor and three were exposed to $2\ 9 \times 10^{15}$ thermal neutrons/cm^2 in the Tower Shielding Facility The solution was not sufficiently resistant to irradiation to permit its use for short lived fission product studies of simulated circulating liquid fuel reactors

Plating of Fission Products on Container Walls Activity measurements were made on MTR capsules and salts about six months after irradiation to determine the distribution of long life fission products No appreciable quantities of fission products had plated the container walls

RADIATION METALLURGY

J C Wilson

ANP CREEP AND STRESS CORROSION

W W Davis J C Wilson
N E Hinkle J C Zukas

The LITR Experiment Review Committee approved the irradiation of the stress corrosion apparatus previously described [1] shortly after the completion of bench tests involving compatibility of certain component parts in case of sodium leakage Alarm circuits were installed in the apparatus to signal sodium leakage water leakage into the apparatus and excessive temperatures and the apparatus was inserted in hole HB 3 of the LITR The fuel chamber containing 0 52 g of ANP fuel No 41 was surrounded by approximately 25 g of sodium Because the furnace required rapid power changes to maintain the specimen control temperature at 1500°F during reactor startup or shutdown periods a Leeds & Northrup Speedomax–air controller combination was used Temperature fluctuations recorded by thermocouples in wells in the sodium chamber did not exceed 10°F at the outset of the test and gradually decreased to half this value after 135 hr of test and the temperature remained steady thereafter The chamber was at control temperature for 1120 hr during this time the reactor was up to power for approximately 700 hr

Periodic checks of the resistance between the stressing weight and the weight probe throughout the test indicated that no gross increase in creep rate was caused by irradiation at a stress of 1000 psi The rig was removed to a shield for storage until it decays sufficiently to permit handling and dissecting The transverse cross section of the specimen below the fuel level will be polished and etched for metallographic examination A companion bench test is now in operation Several attempts to simplify both assembly and sectioning of the apparatus by changing or eliminating the baffle arrangement now in use reintroduced the temperature excursions which were so troublesome at the outset of design of the rig

Operation of the apparatus in the LITR is satisfactory but its satisfactory performance in the MTR is not assured because of the greater gamma heating in the relatively massive apparatus required to achieve smooth temperature control Stress corrosion data are urgently needed at fuel power densities of 1000 w/cc in the MTR

A possible short cut stress corrosion apparatus is being mocked up The specimen tube consists of a cylinder stressed by gas pressure on the inside and in contact with fuel salts on the outside The salt is in an annular space around the specimen tube the outside of the salt annulus is the inside of a container tube that is finned on the outside to transfer heat to helium in a water jacketed can To preserve a low surface to volume ratio it was suggested by R G Berggren that the salt be allowed to remain solid at the container tube wall This would cut the surface to volume ratio approximately in half if any interaction between the solid salt and the container wall is ignored Whether good heat transfer can be gotten between the solid salt and the wall remains to be determined The experiment is unique in that the hottest part of the molten salt is in contact with the specimen tube at 1500°F In capsule tests the inside of the salt volume has frequently been several hundred degrees hotter than the salt metal corrosion interface

Since rupture of one of the metal members is a possibility cooling in a gas stream is probably unsafe from a reactor operations standpoint Convection cooling by fins to helium in a water jacket or conduction by fins to a water cooled heat sink appears to be attractive Experiments showed that convective heat transfer from fins should be successful however if this should not be a successful method conductive heat transfer will achieve the results Empirical heat transfer data are being obtained for longitudinally finned vertical cylinders and this work will be extended to cover conducting fins Generation of sufficient heat in small cylinders to simulate the fission heat has proved to be difficult passage of an electric current through the finned tube works well for low conductivity fins and carbon arc and platinum radiation heaters are being tried As soon as data can be reliably extrapolated a test will be put in the LITR

The MTR creep apparatus and accompanying instrumentation have been shipped to the MTR Details to be supplied for approval of the stress corrosion rig have been collected but will not be

[1] W W Davis J C Wilson N E Hinkle and J C Zukas *ANP Quar Prog Rep Sept 10 1954* ORNL 1771 p 142

submitted until the first LITR test has been operated

Tests have begun on an electromagnetic transducer that is advertised to be operable at 1300°F Similar to a microformer in principle it is canned in stainless steel and has ceramic insulation on all windings The device will be tested under irradiation upon completion of bench tests If it is operable in a reactor the transducer will be suitable for strain measurements in the bending type stress corrosion apparatus An extensometer for the internally pressurized tube burst specimen is possible but no developmental work is being carried out For strain data the internal diameters of the specimen tube will be measured with a pneumatic gage after irradiation and multiple specimens will be irradiated if necessary, to obtain a strain time curve

Two bench tests of Inconel tubes stressed by bending in a helium atmosphere were completed Fuel salt No 44 was inside the tubes After 432 hr at 1500°F a few subsurface voids were visible and were distributed about equally around the periphery of the tube Another test was operated for 866 hr and the number of subsurface voids per unit length of periphery was greater by a factor of 2 at the tension and compression sides of the tube than at the neutral axis This tentatively confirms the hypothesis that stress corrosion in the usual sense is not taking place in these tests and that the phenomenon should be called strain rate'' or strain ' corrosion

HRP RADIATION METALLURGY

R G Berggren J C Wilson

Machining procedures for satisfactorily notching at a nominal cost impact bars to be used in HRP radiation tests have been developed

Fabrication of an irradiation plug for use in the HB 3 facility of the MTR was completed and the irradiation was satisfactorily carried out This irradiation plug utilizes light water in the plug and the concrete cubicle doors to provide the necessary radiation shielding and results in a lighter and more economical shield than would be obtained by use of a solid plug The information obtained in constructing and operating this irradiation plug is being used in two plugs now being built for specimen irradiations at temperatures between 40 and 200°F and in an experiment now being designed for specimen irradiations at temperatures up to 600°F

Impact tests of a number of irradiated metals are now in progress The metals irradiated in the HB 3 facility of the LITR at about 100°F and their heat treatment histories prior to irradiation are ASTM A 212B and SAE 1040 steels in the hot rolled condition AMS 5616 AMS 5643 (Armco 17 4 PH) and Timken 17 22A in the recommended heat treatments type 301 stainless steel in the annealed condition and high purity iron (Ferrovac R) that had been given subcritical and supercritical anneals Specimens of annealed type 301 and type 446 stainless steels irradiated in the HB 3 facility of the MTR at approximately 170°F are ready for impact testing Tests are in progress for the Metallurgy Division on SAE 4340 steel and a tool steel both of which were in the quenched and stress relieved, quenched and tempered and annealed conditions These steels were irradiated in a Hanford process channel to a dosage of 10^{20} neutrons/cm^2 Impact tests for the Metallurgy Division are also in progress on vacuum annealed thorium irradiated in the LITR tensile tests on a corresponding series of samples have been completed

Two irradiations were completed in the MTR and tests will be made when the specimens have been returned to ORNL The first of these two irradiations was done in an LB piece with the specimens in contact with reactor coolant water Impact and tensile specimens of annealed types 301 302 302B 304L 305 321 and 347 stainless steel are included in this experiment The second irradiation was done in the HB 3 facility at a specimen temperature of 130 to 185°F and included impact and tensile specimens of ASTM A 212B steel in the normalized quenched and tempered and spheroidized conditions high purity iron (Ferrovac R) that had been given subcritical and supercritical anneals annealed Croloy 5 8½% nickel steel in the normalized condition vacuum annealed Ti 75A titanium and vacuum annealed Zircaloy 2

Now being irradiated in the HB 3 facility of the LITR at specimen temperatures below 200°F are specimens of Croloy 5 8½% nickel steel Carilloy T 1 ASTM A 106 steel made by both coarse and fine grain practice and experimental low manganese heats of ASTM A 212B and ASTM A 242 steels

Zircaloy 2 scrap from the fabrication of the HRT core tank has been received and impact and tensile test specimens will be fabricated of this material for tests of irradiation effects

In addition to impact and tensile tests and a few fatigue tests on the various materials further tensile tests have begun in which the speed of testing is varied to observe the manner of plastic deformation at low strains (less than 1%) The observation[2] that irradiation may cause yield points in 2S aluminum and in type 347 stainless steel has caused some concern that the yield stress may be strongly strain rate dependent A strong dependence of yield stress on rate of straining may cause the ductility of these face centered cubic materials to be lowered in a manner not anticipated from the known behavior of these metals in the unirradiated conditions The importance of the strain rate sensitivity of the yield stress in ductility of metals has recently been discussed [3]

HOT METALLOGRAPHY

M J Feldman W B Parsley
A E Richt R N Ramsey

Three additional ORNL ANP capsules in the UF_3 UF_4 comparative series have been analyzed the results are reported elsewhere [4] Two of the three capsules were filled with UF_3 salt and the third capsule was filled with a modified UF_4 salt Two control samples one UF_3 and one UF_4 were analyzed in conjunction with the three irradiated samples All five samples showed only negligible corrosion penetration No relative comparisons could be made between the UF_3 or UF_4 salts because of the absence of any corrosive attack This experiment did indicate the effect of uranium concentrate and/or purity of the salt on corrosion

Work has continued on the analysis of component parts of the HRE and other experiments conducted by the HRP group Specifically sections of the HRE core and inlet line [5] thermocouple well [6] and gas snout[7] have been examined Also metallographic analysis of components and coupons of HRP loop DD has been completed [8] Corrosive penetration to a depth of 2 5 mils has been noted at the grain boundaries on sections from the core and fuel inlet line The HRE thermocouple well and gas snout have shown grain boundary penetration to a depth of 0 5 mil Because of lack of controls on materials during fabrication of the HRE no estimate of the amount of general surface removal can be made

Corrosion coupons from the HRP in pile loops have with one exception shown no general surface removal Corrosive attack upon the coupons has taken three general forms (1) a rather broad corrosive penetration at the grain boundaries of generally less than 0 5 mil in depth (2) a pitting type of attack with penetrations to a depth of greater than 2 mils and (3) a general surface type of removal with the resulting surface so smooth that an erosive phenomenon would be suspected The systems under inspection in the loop examination are so complex that a complete evaluation of the results by this section is impossible therefore the results will be reported by the HRP Corrosion Group In general corrosive results as shown by remote metallographic examination have been in close correlation with the weight loss data obtained by the HRP personnel

Work on the GE ANP fuel element programs continued Samples from the following elements were prepared and the analyses were reported GE ANP wire fuel element No 2 [9] G E nichrome plate element L 1 [10] and G E molybdenum disilicide elements 1 and 2 [11]

---

[2] R W Hall and J C Wilson *Solid State Semiann Prog Rep Aug 30 1954* ORNL 1762 p 9

[3] D K Felbeck and E Orowan *Experiments on Brittle Fracture of Steel Plates* Tech Rep No 1 Mech Engr Dept MIT (July 1954)

[4] M J Feldman W B Parsley R N Ramsey and A E Richt *Metallographic Analysis of Irradiated Capsules 251 263 and 265 Control Samples 258 259 and Lap Joint of Bench Loop Test No 3* ORNL CF 55 2 147 (Feb 24 1955)

[5] M J Feldman W B Parsley R N Ramsey and A E Richt *Metallographic Analysis of HRE Core and Fuel Inlet Line* ORNL CF 54-8 216 (Aug 16 1954)

[6] M J Feldman W B Parsley R N Ramsey and A E Richt *Metallographic Analysis of HRE Thermocouple Well Sections P 1 P 2 P 3 and P 4* ORNL CF 54 9 232 (Sept 24 1954)

[7] M J Feldman W B Parsley R N Ramsey and A E Richt *Metallographic Examination of HRE Gas Snout* ORNL CF 55 2 125 (Feb 17 1955)

[8] M J Feldman W B Parsley R N Ramsey and A E Richt *Metallographic Examination of Coupons and Components of HRP In Pile Loop DD* ORNL CF 55 2 73 (Feb 9 1955)

[9] M J Feldman W B Parsley R N Ramsey and A E Richt *Metallographical Analysis of G E Wire Fuel Element No 2* ORNL CF 54 9 142 (Sept 22 1954)

[10] M J Feldman W B Parsley R N Ramsey and A E Richt *Metallographic Analysis of G E Nichrome Plate Element #GE ANP L1* ORNL CF 54 12 92 (Dec 14 1954)

[11] M J Feldman W B Parsley R N Ramsey and A E Richt *Metallographic Analysis of G E Molydisilicide Fuel Elements No 1 and 2* ORNL CF 54 12 187 (Dec 20 1954)

The final stage of the joint experiment by ORNL, Pratt & Whitney, and BMI has been started. Analyses of two additional capsules (capsules 10 and 11) have been made and reported.[12] The final two capsules will be ready for analysis about March 1. The analyses of capsules 10 and 11 showed, for the first time, a serious fuel-plate defect that was due to irradiation. Four small-particle (<3-μ UO_2) samples that were examined had been irradiated to a higher burnup (two at 23% U^{235} burnup and two at 39% U^{235} burnup) than had any other samples examined to date (12.4% U^{235} burnup had previously been the highest irradiation). The four samples showed core cracking in the as-irradiated condition. Samples of larger particle size (15 to 44 μ) did not exhibit this effect. Additional samples of these two particle sizes were subjected to the standard bend test ($1\frac{1}{2}$-in.-radius bend), and the larger particle samples did not crack. Figure 1 shows the small-particle (<3 μ) fuel plate before the bend test, and Fig. 2 shows the larger particle (15 to 44 μ) fuel plate after the bend test.

Four samples of a stainless steel fuel element prepared by GE-ANP and irradiated by KAPL were analyzed by this group.[13] These elements were of special interest because there was a considerable amount of blistering present after irradiation. The samples contained 5, 10, 20, and 30 wt % UO_2 and had been irradiated at high temperature in sodium to 18 to 20% U^{235} burnup.

In cooperation with the Metallurgy Division this group will perform metallographic analyses of various designated portions of the ARE. The first samples, from the sodium circuit, are to be screened by this group and either processed or transmitted to the cold metallographic laboratory under R. G. Gray. The selection of the facility is to be based on the activity of the sample.

In cooperation with the Army Power Package Reactor Group and the Metallurgy Division, a program of testing potentially suitable fuel elements for the reactor has been initiated. This group has assumed the responsibilities for coordinating the disassembly, for shipping the experiments after irradiation, and for the metallographic analyses of the various fuel elements to be tested.

A plywood mockup of the metallography-cell extension has been constructed, and the various pieces of equipment for the actual extension have been tested in it. A mockup of the shield for the metallograph has also been constructed, and the many controls to the metallograph are being installed on a trial basis. The completion date on the cell extension has been delayed and is now estimated at from June 1 to July 1.

[12] M. J. Feldman, W. B. Parsley, R. N. Ramsey, and A. E. Richt, *Metallographic Examination of P&W Capsules 1-10 and 1-11*, ORNL CF-54-12-212 (Dec. 29, 1954).

[13] M. J. Feldman, W. B. Parsley, R. N. Ramsey, and A. E. Richt, *Metallographic Examination of KAPL Samples A-4, B-3, C-3, S-4*, ORNL CF-54-12-30 (Dec. 7, 1954).

Fig. 1. As-Irradiated Small-Particle Sample Before Bend Test. 100X.

Fig. 2. Larger Particle Sample After Bend Test. 100X.

ENGINEERING PROPERTIES

O Sisman

LITR FLUORIDE FUEL LOOP

W E Brundage	C Ellis
C D Baumann	J G Morgan
F M Blacksher[1]	M T Morgan
R M Carroll	A S Olson
J R Duckworth	W W Parkinson

All welding of the LITR fluoride fuel loop was supervised by the Metallurgy Division and the recommended specifications were met The schematic drawing Fig 3 shows the details of the construction of the loop [2] By x raying the Calrod heaters to determine their effective heating lengths it was possible to position them in such a way as to avoid hot spots on the fuel tubes

After the loop was assembled it was given a series of tests in the laboratory to ensure that the inside surfaces were clean and that there were no leaks Leak tests were made at 1500°F with a helium leak detector

The pump was turned on and a charge of barren salt No 31 was forced into the loop by pressurizing the charge tank (Fig 4) until the salt made contact with a probe in the pump bowl The pump was then turned off all pressures were equalized and the fill line was frozen at point *A* The loop was run for 7½ hr at 1500°F and with velocities of 5 to 15 fps (velocities are based on 0 225 in ID nose piece section) The salt was then frozen at point *B* and forced back into the charge tank by pressurizing the draining pressure system The loop was then drained and cooled under a helium atmosphere

The loop was inserted into LITR hole HB 2 on December 7 and electrical and piping connections were made before the shielding was completed After the loop was brought to temperature it was again filled with barren salt No 31 was operated for 8½ hr and then drained The enriched fuel (composition 25 mole % UF_4 12 5 mole % ZrF_4 62 5 mole % NaF) was then charged into the loop and the fill line was sealed off The quantity of salt required to fill the loop to the bottom probe of the pump bowl was 4 86 kg With the fuel circulating at temperature and the reactor at zero power the remainder of the external shielding was added Figure 5 shows a cutaway sketch of the external shielding required together with the gamma flux readings that were taken during operation of the loop Because of the difficulty in placing the paraffin close to the hot pump enclosure more shielding was required around the periphery than was originally planned Additional concrete block walls were placed in front of the instrument panel for protection of the operating personnel

Full reactor power was reached at 4 30 PM on December 11 and the electric heaters were adjusted to maintain the desired operating temperature Flow during the entire run was maintained between 8 and 10 fps (at a Reynolds number of 5000 to 6500) The flow measuring device described previously[3] proved to be very successful and permitted a continuous monitoring of the salt velocity The transmitter was redesigned (Fig 6) to withstand a pressure of as high as 10 psi across the diaphragm without causing a pressure shift The transmitters were subjected to pressures as high as 40 psig during operation with the first filling of non uranium bearing salt Each cell has a sensitivity of about 0 1 psi

The total power generation of the fuel under reactor flux was determined by a series of heat balances with the reactor at full power and with the reactor off Equilibrium conditions were established with the reactor at full power upon reactor shutdown the electric heaters were increased to maintain operating temperature conditions along the loop This increase in electric power to duplicate thermal conditions under flux was assumed to be equal to the power that had been added to the system by the fissioning fuel Several such measurements gave an average of 2800 w which is about one third the anticipated power An experiment to duplicate the perturbated flux pattern is being conducted to determine the highest wattage densities obtained in the loop test and to ascertain why the total power was lower than expected

[1] Deceased

[2] W E Brundage *et al* *Solid State Semiann Prog Rep Aug 30 1954* ORNL 1762 p 21

[3] W E Brundage *et al* *Solid State Semiann Prog Rep Aug 31 1953* ORNL 1606 p 29

ORNL LR DWG 5969

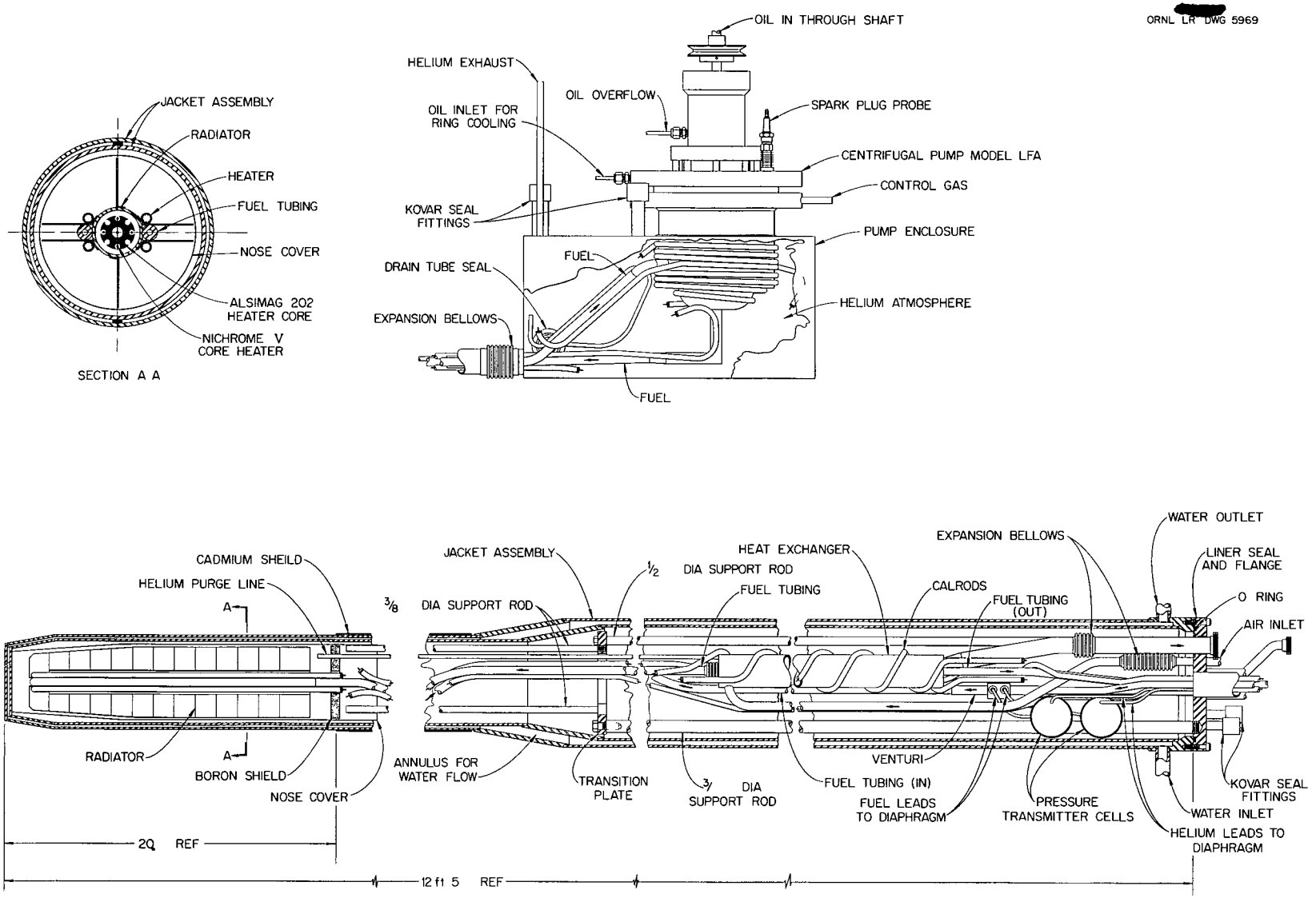

Fig 3 Diagram of LITR Fluoride-Fuel Loop

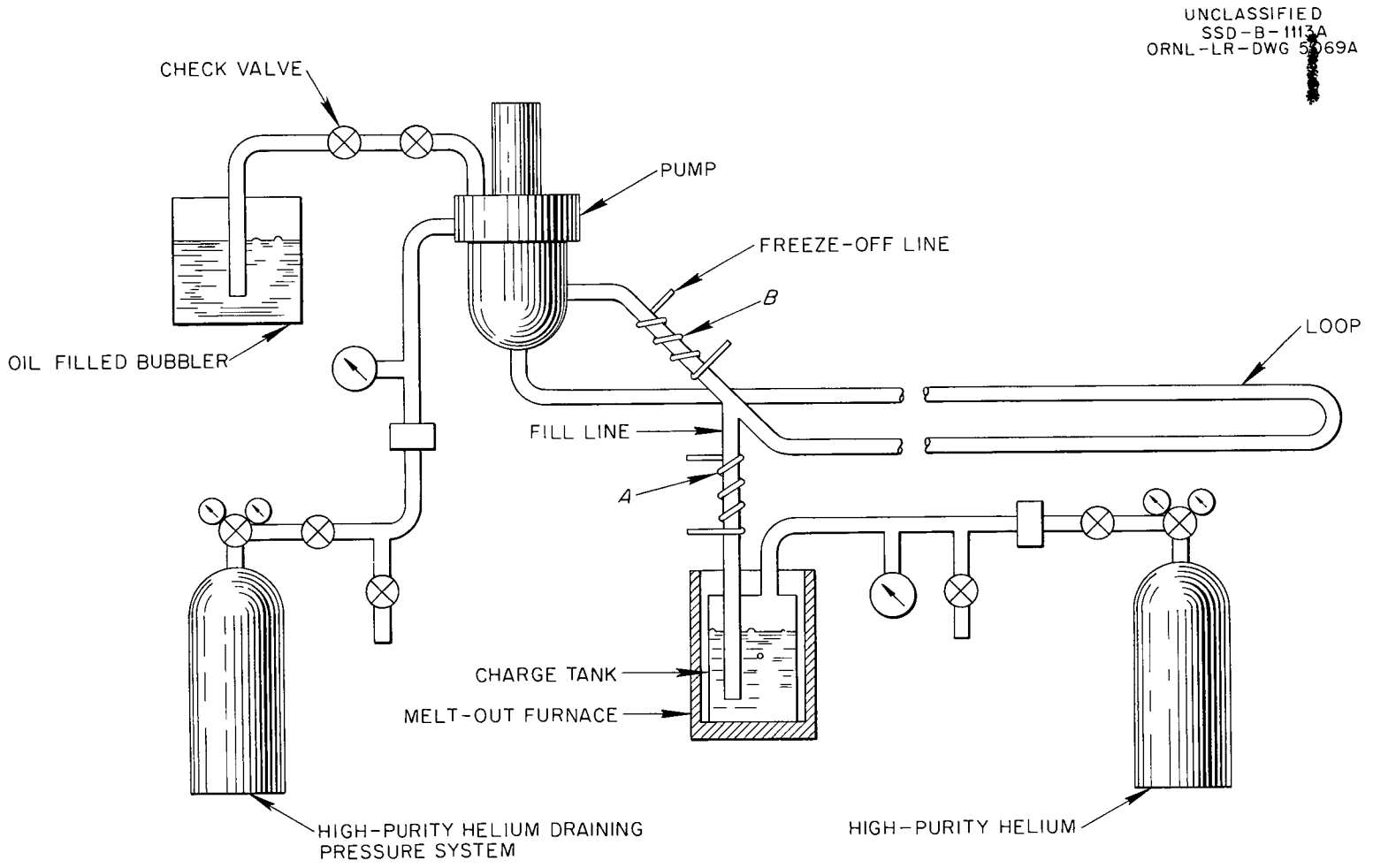

Fig 4 Diagram of the Fluoride-Fuel Loop Filling System

[redacted]
SSD B 1121A
ORNL LR DWG 5342A

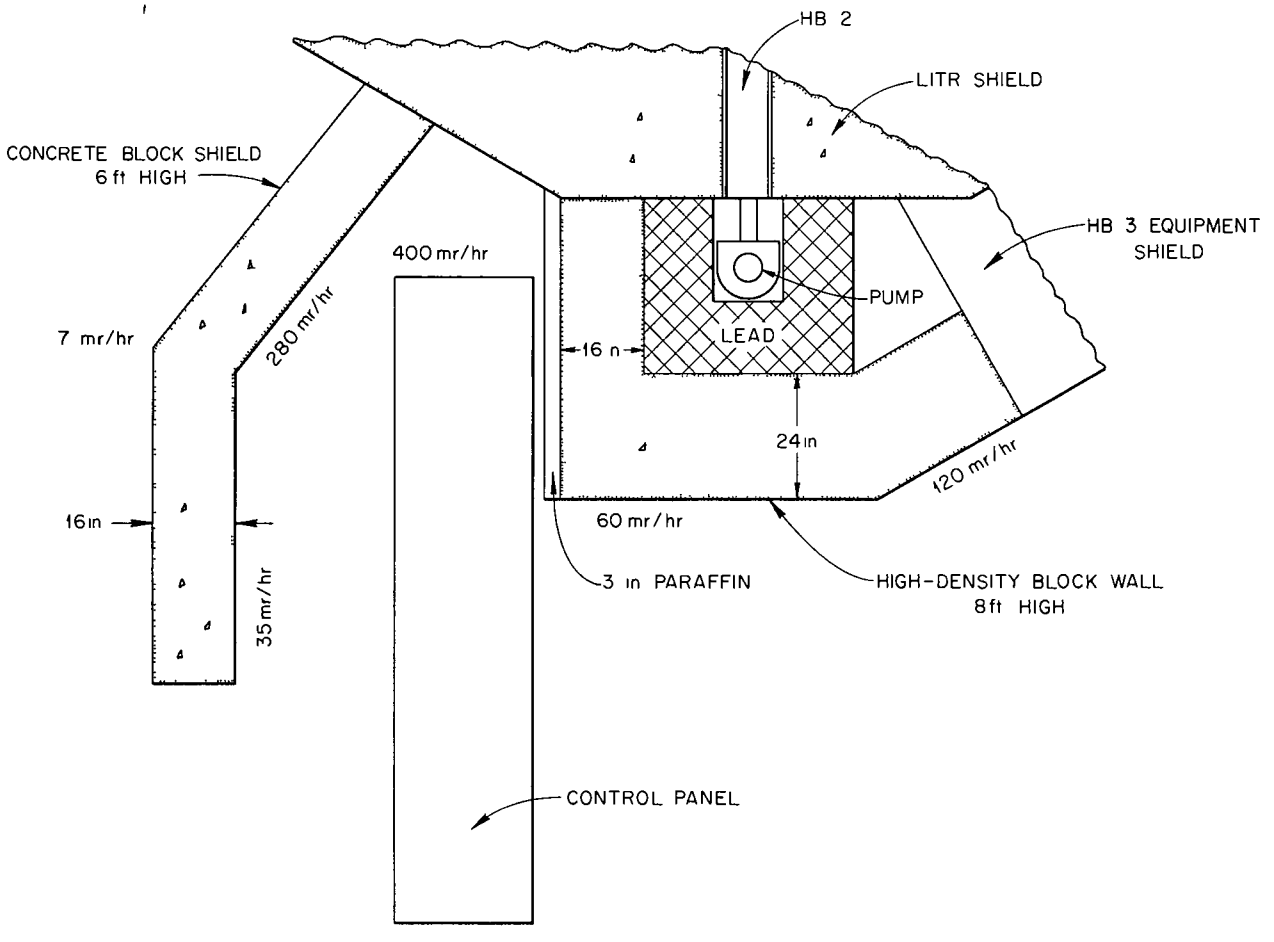

Fig 5 Horizontal Section Through Shield and Gamma Flux Readings During Operation

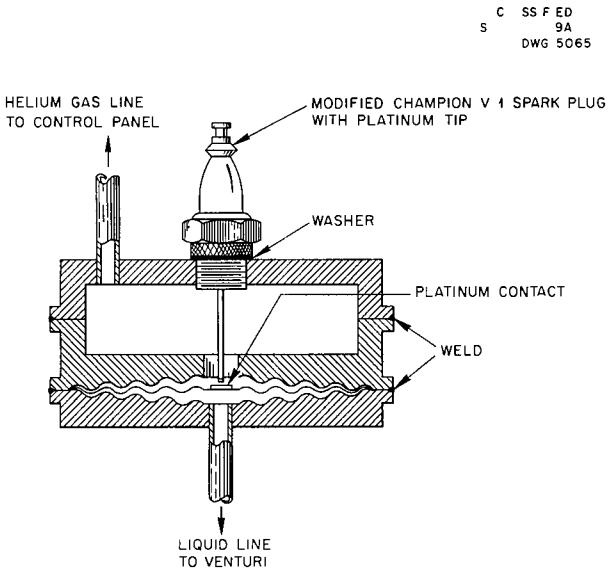

Fig 6 Pressure Transmitter Cell

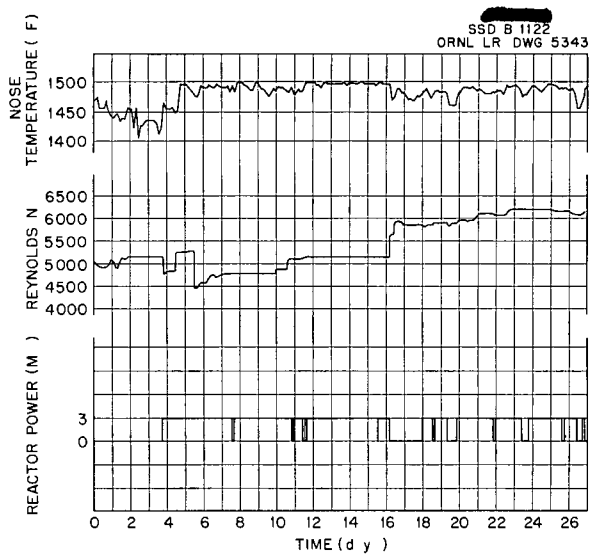

Fig 7 Reactor Power Salt Velocity and Loop Temperature vs Time

On January 7 the drive belt to the pump motor became inoperable With the reactor down a portion of the external shielding was removed and the belt was replaced It was not possible to get circulation started again because there was a cold region in the loop The test was terminated and the experiment was withdrawn from the reactor and taken to the hot cells Building 3025 for disassembly The experiment had operated for a total of 645 hr 475 hr was at full reactor power Figure 7 shows a composite plot of reactor power loop temperature and salt velocity vs time

Figure 8 shows the interior of the disassembly hot cell where the loop tubing will be sectioned for metallographic examination

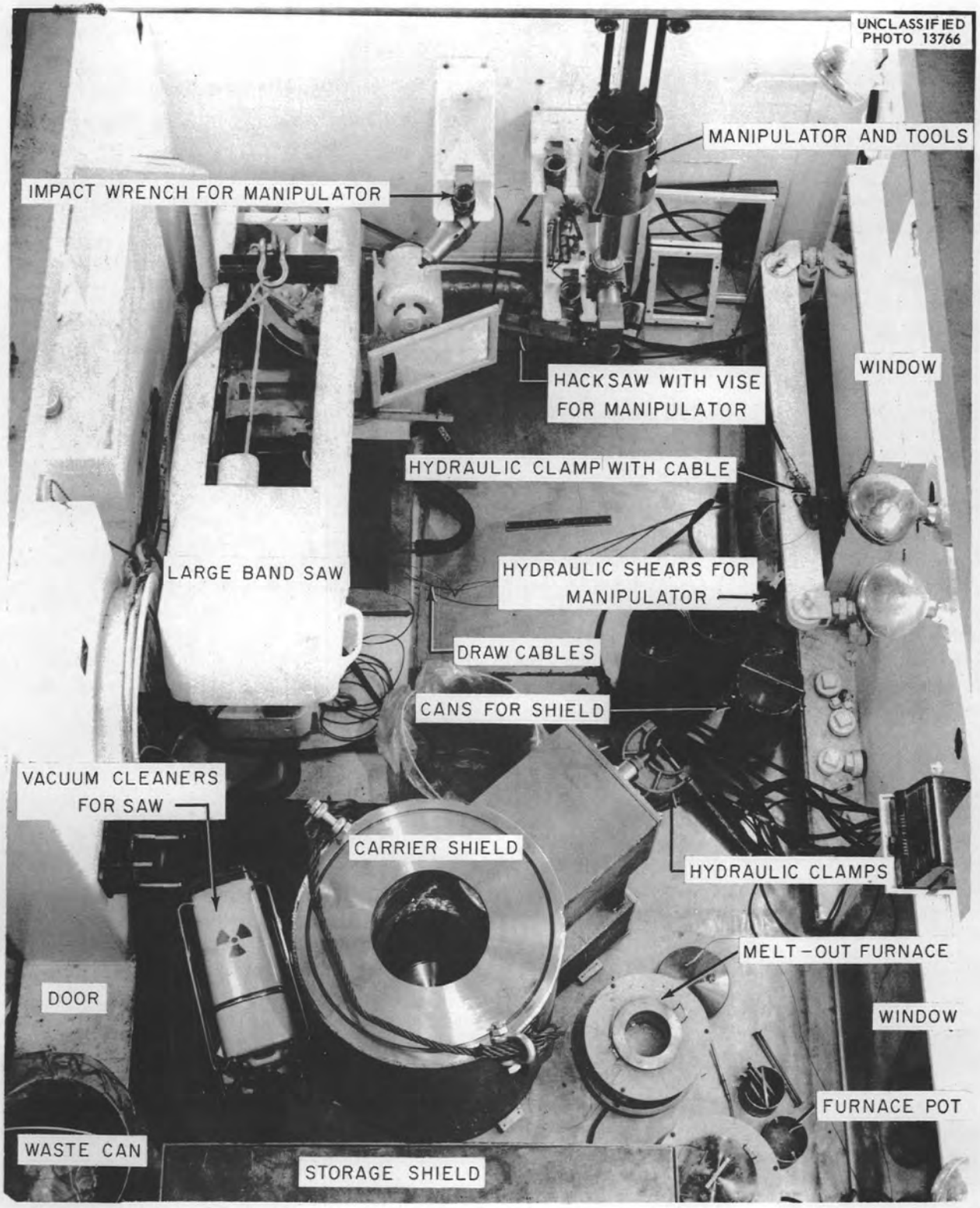

Fig. 8. Interior of Fluoride-Fuel Loop Disassembly Cell.

FUSED SALTS

G W Keilholtz

VERTICAL DYNAMIC CORROSION LOOP

W R Willis

An in pile dynamic corrosion loop has been designed and partially constructed to operate vertically in position C 48 of the LITR The equipment consists of a miniature sump pump[1] with a fuel loop and an air heat exchanger[2] The unit is encased in a stainless steel jacket and connected to the exit facility on the northwest face of the LITR by a flexible stainless steel tube

The experiment will be loaded into the reactor with the salt frozen It is expected that the first test will operate with a fuel Reynolds number of 3000 and that there will be a difference in temperature of 100°F along the length of the fuel tube These conditions will require 20 cfm of cooling air and a pump speed of approximately 4800 rpm Figure 9 shows the unit in position C 48 of the LITR

If a rupture of the loop should occur an intolerable quantity of fission gases would be exhausted to the stack Extensive tests of the delay of fission products by charcoal traps have shown that the delay time is a function of trap volume and of the reciprocal flow rate of the element gas and that air flowing through the trap for extended periods prior to a release of fission gases has no effect on the delay time The trap installed on the vertical in pile loop will cause a delay of 60 sec before a maximum intensity of off gas is reached this will give sufficient time to shut the reactor down before the radiation level becomes intolerable

When the experiment is completed the removal cask will be lowered into the water tank of the reactor and the apparatus will be loaded under water This will be accomplished by threading the facility tube through the cask and withdrawing the complete unit as a capsule After the cask has been moved to the south pad outside the reactor building the facility tube will be cut off and the rest of the unit will be transported to the hot cells in the Solid State Building The enclosed fuel system will be opened in a hot cell After sectioning is completed metallurgical samples will be sent to the Hot Metallography Group and fuel samples will be sent to the Analytical Chemistry Division for examination

[1] J G Morgan *Solid State Semiann Prog Rep Feb 28 1954* ORNL 1677 p 30

Miniature Sump Pump

W R Willis M F Osborne
H E Robertson T L Trent[3]

The miniature sump pump for the in pile dynamic corrosion loop[1] has been tested with molten salt

[2] M T Robinson and D F Weekes *Solid State Semiann Prog Rep Aug 30 1954* ORNL 1762 p 48
[3] Engineering and Mechanical Division

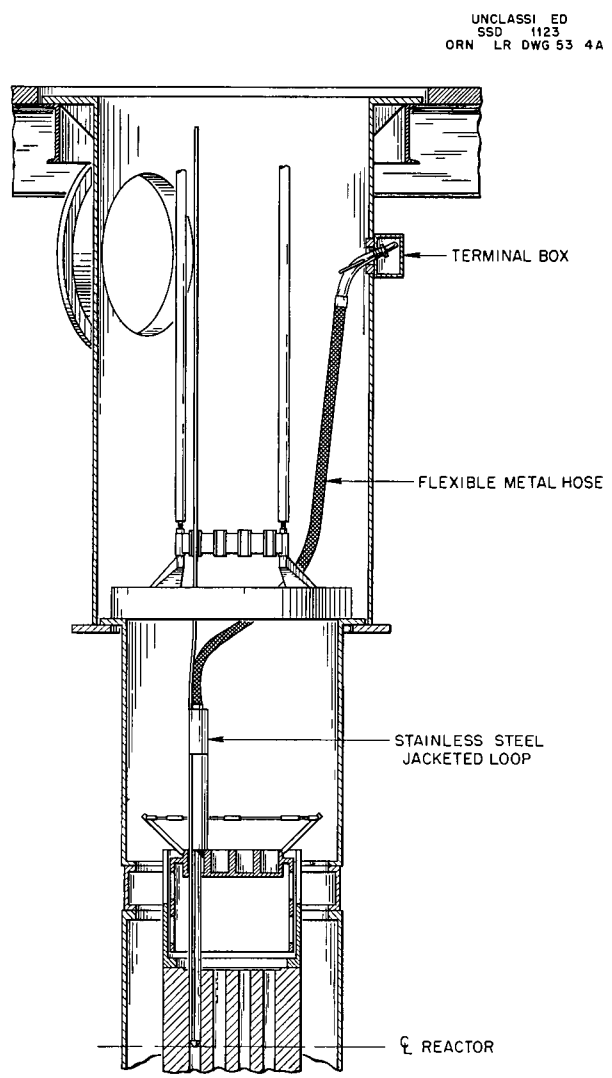

Fig 9 Reactor Installation of Vertical In Pile Loop in Position C-48 of the LITR

in a replica of the loop to be run in facility C 48 of the LITR In the course of these tests some minor modifications were made that is the Graph itar bearing is now mounted in an Inconel cartridge which is fitted to the Inconel housing and some tolerances between the pump impeller and the impeller housing have been increased

Water was circulated in the first bench tests to determine the pump characteristics measurements were made of the back pressure at cutoff and of head vs capacity Figure 10 shows the character istic curve of water flow vs head at a pump speed of 5000 rpm

A second test was run to measure the time re quired to pump a metered volume of fused salt at various pump speeds In a third test the flow vs pump speed was measured with the use of a high temperature venturi type of flowmeter Because of the difficulty in arranging a variable resistance to flow at high fused salt temperatures the curve of Fig 10 has not been checked at the elevated tem peratures Instead the values of head vs rpm shown in Fig 11 were measured

The values given for water were measured at cutoff conditions values for the fused salt were measured with flow and were calculated for cutoff conditions by means of the Fanning equation and the data in Fig 10 Figure 11 shows that the cut off values of head measured with salt are lower

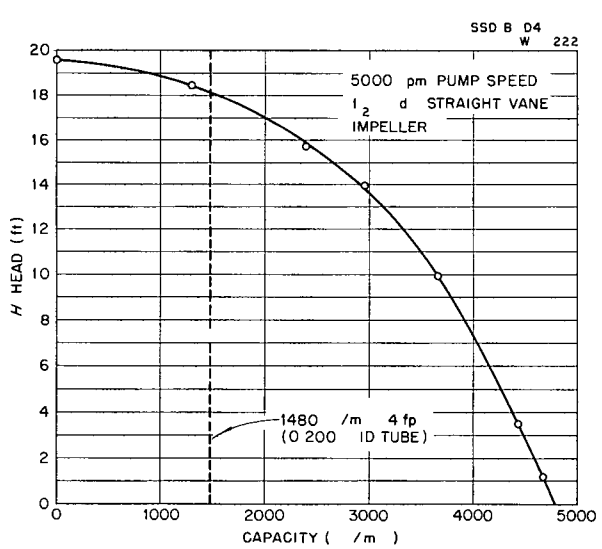

Fig 10 Characteristic Curve of Head vs Flow for Vertical In Pile Loop

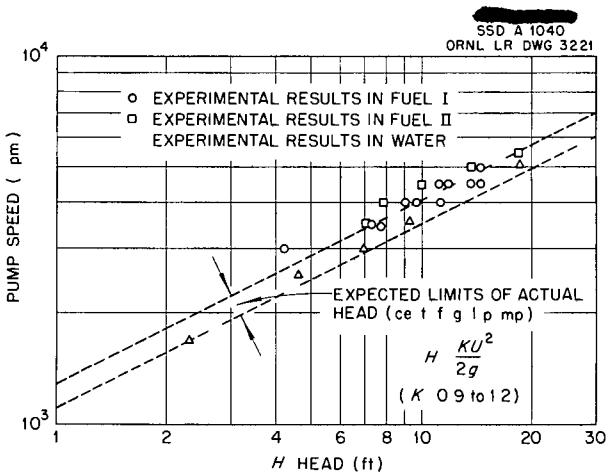

Fig 11 Pump Performance Curve

than those measured with water This could be due to overestimating the value of the resistance to flow of the loop in the Fanning equation or to the fact that the leakage around the impeller is greater in the modified pump now used The agreement found is considered to be satisfactory

In the latest pump test the pump has now oper ated for over 300 hr and shows no sign of failure During this time the pump was sawed open the salt was removed and the pump volume was de creased The pump has been welded into three separate loops and drained hot once No difficulty has been experienced in refilling and starting the pump after these operations

High Temperature Motor

W R Willis M F Osborne
H E Robertson J A Kasserman[3]

The high temperature motor[4] has been constructed with glass insulated wire mica and high altitude brushes and was used in the latest pump tests The efficiency of the rebuilt motor closely matches its original efficiency The resistance of the wind ings was changed so that the motor requires a lower voltage and higher amperage at a given power output Table 1 gives a comparison of the motor before and after it was rebuilt The motor has thus far been in operation for 100 hr and shows no indication of wear

[4] J G Morgan and H E Robertson *Solid State Semiann Prog Rep Aug 30 1954* ORNL 1762 p 47

TABLE 1. PERFORMANCE CHARACTERISTICS OF MOTOR BEFORE AND AFTER REBUILDING

Motor	Speed (rpm)	Current (amp)	Voltage (v)	Power (w)
		Under No Load		
Rebuilt	7500	0.43	45	19
Original	7500	0.35	68	24
	3000	0.30	45	14
		Under Load		
Rebuilt	4000	0.82	48	39
Original	4000	0.62	63	39

Heat-Exchanger System

W. R. Willis M. F. Osborne
H. E. Robertson T. L. Trent

The in-pile model of the miniature dynamic-corrosion loop has been welded. Figure 12 shows the components of fuel column and heat exchanger assembly before they were welded. The air annuli, with the expansion bellows brazed into place, are shown mounted to the jig that was used in welding. The venturi flowmeter is shown at the left, and the thermocouple wells are shown welded to the fuel tube. Figure 13 shows the completed assembly. The rings around the annuli are Lavite insulators that will be used to space the heaters.

Heat-transfer calculations that predict the thermal behavior of the loop have been completed and have been reported.[5]

Thermocouple Test

M. F. Osborne

An optical pyrometer was used to check the accuracy of loop thermocouples in a flowing, hot-salt test. A special test section, 30 in. long, was fabricated and was inserted in a loop of standard dimensions. This test section was enclosed in an air annulus with quartz windows for observing the salt tube in the vicinity of the thermocouple wells, which were small tubes welded to the salt tube and extending out through the annulus. The thermocouple was attached to the wall of the salt tube with a discharge welder, and the surrounding tube shields the junction from the cooling air. A low-voltage, high-current power supply was used to heat the test section, and clam-shell heaters covered the remainder of the loop.

Temperatures, as indicated by the pyrometer and thermocouples, were recorded for varying air flow and power input to the test section. In general, these temperatures were between 750 and 800°C. The range of air flows covered that expected for the in-pile test, and power input was comparable to the lower powers expected in the reactor. Since thermocouple error varies inversely with the power and directly with the air flow, the greatest error

[5] M. T. Robinson and D. F. Weekes, *Design Calculations for a Miniature High-Temperature In-Pile Circulating Fuel Loop*, ORNL-1808 (to be published).

UNCLASSIFIED
Y-14391

Fig. 12. Components of Fuel Column and Heat Exchanger Before Welding.

Fig. 13. Fuel Column and Heat Exchanger Assembly.

will result when the internal heat source is low and the air flow is high.

It was found that the position of the thermocouple head on the bottom of the well has a marked effect on its indication. The fin effect of the well and the shielding from the air tend to balance, but the thermocouple must be located in the center of the well for maximum accuracy. The temperature falls rapidly from the center to the walls of the well. As more power was applied, this gradient was flattened, and the two effects more nearly approach balance; consequently, the thermocouple error is reduced.

Experimental data also indicate that the error varies with length along the tube and is greatest at the point of cooling air entry. All temperature readings fell within a band about 20°C wide at low air flows; this band width increased to about 50°C at a maximum air flow of 10 cfm, which represent the worst case that should be encountered in the reactor. All thermocouple readings were lower than the corresponding temperature read with a pyrometer.

Excess-Reactivity Tests in the LITR

W. R. Willis

In the event of a rupture in the vertical dynamic-corrosion loop, fuel would be introduced in the center of the lattice of the LITR. Some calculations by M. T. Robinson showed that this could give an excess reactivity of as much as 2 to 4%. These calculations give only approximate results, and because of the possibilities of error it was deemed necessary to make an experimental check.

The apparatus consisted of an outer aluminum jacket of rectangular cross section which fit into hole C-48 of the LITR. A flange welded to this can rested on the upper guide-grid assembly and supported the experiment. The bottom of the can extended 16½ in. below the center line of the lattice. The top of the can opened into an aluminum tube which extended through the top plate of the reactor. The uranium-bearing salt was cast in a cylindrical annulus (Fig. 14) of Inconel to which was welded a steel pipe. This pipe extended through the aluminum tube and allowed the fuel can to be suspended at various positions by means of a locking bolt in holes drilled through the two tubes. The fuel can was filled with salt of the batch to be used in the vertical corrosion loop. It contained 120 g of U^{235}, which is within 2 g of the amount to be used. The annular geometry is believed to have given a higher reactivity than any which would result from a rupture of the loop. This apparatus was transferred to the Reactor Operations Group, who conducted the experiment. The methods, calculations, and results given below are based on information in a memorandum by J. A. Cox.[6]

The buildup of xenon was checked during a shutdown by going to N_L (1% of full power) once each hour for 8 hr. Since the xenon buildup is known, this gave a calibration of the rods. The calibration of rod No. 2 was about 15% lower than the original calibration. Since there has been appreciable burn-up of the rod, however, this is considered to be a satisfactory check.

Before the experiment was loaded into the reactor during a later shutdown, fuel was removed from spaces 18 and 19 and the beryllium was removed from hole C-48 (Fig. 15). It was found that it was

[6] J. A. Cox, *Measurement of Excess Reactivity Due to Simulated Vertical Loop Leak in LITR Core Position C-48*, ORNL CF-55-2-135 (Feb. 18, 1955).

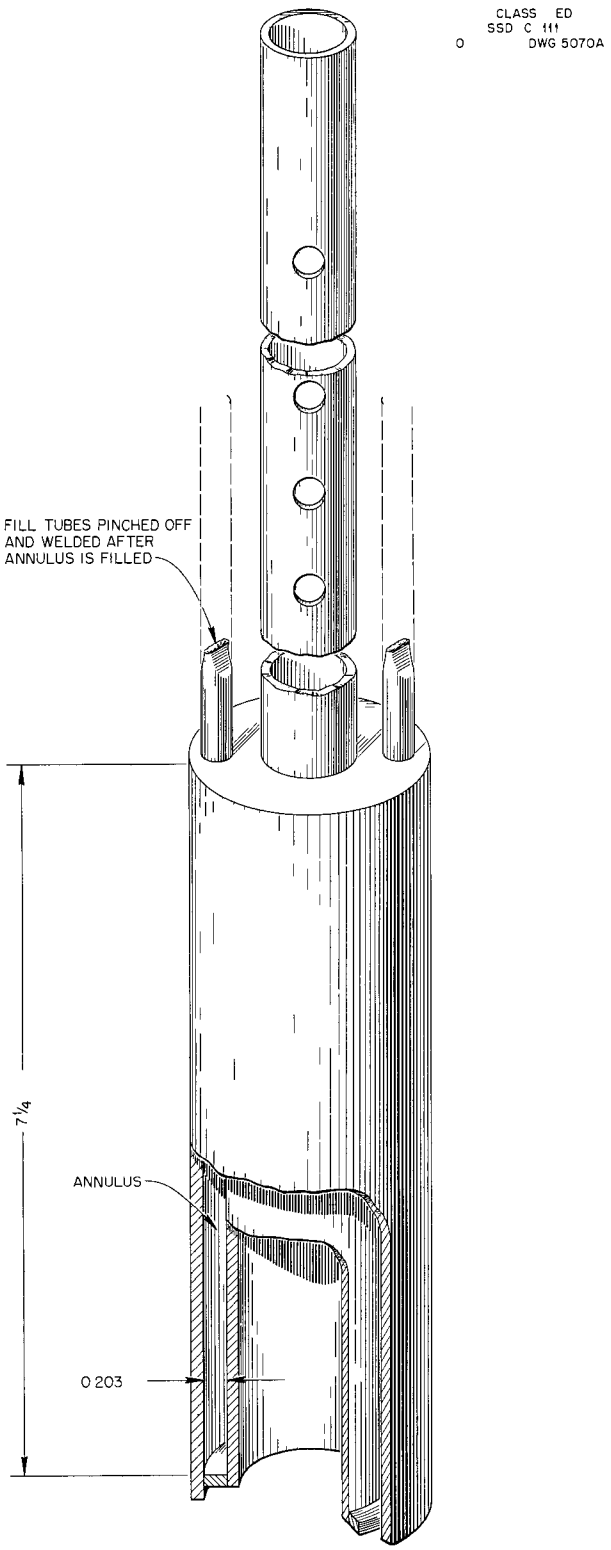

Fig 14 Excess Reactivity Apparatus

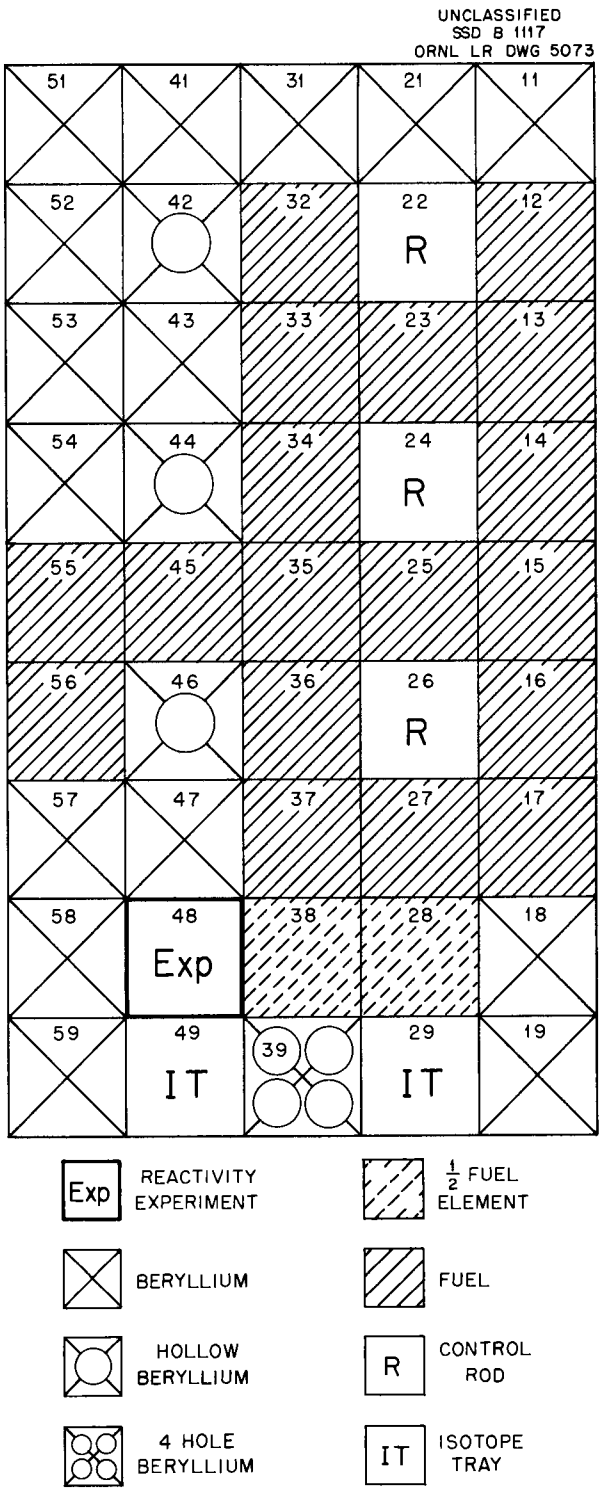

Fig 15 Loading Plan for Excess Reactivity Experiment

impossible to bring the reactor up at this time (10 hr after shutdown) because of xenon poison The next day the reactor was brought to 0 1 N_L with the experiment completely out of the reactor then with the experiment at four positions in the lattice and again with the experiment out of the lattice The results are shown below with the position of the fuel given as the distance of the center line of the fuel from the center line of the reactor These values are corrected for the buildup of xenon during the experiment It can be seen that the fuel added less than 0 2% $\Delta k/k$ reactivity The results also indicate that the maximum flux in hole C 48 is found to exist above the center line of the reactor as was found by M T Robinson [7] but not 5 in above as was reported by Robinson

Position of Fuel (in)	Excess Reactivity (%)
$7\frac{1}{8}$ above	0 07
$3\frac{1}{8}$ above	0 14
$\frac{7}{8}$ below	0 13
$4\frac{7}{8}$ below	0 07

The addition of poisons such as water and stain less steel would influence the position of the flux maximum but the most important factor here would be the influence of reactor heating Since these measurements were made at 0 1% of full power the flux maximum would be expected to be nearer the reactor center line

EFFECT OF RADIATION ON STATIC CORROSION BY FLUORIDE FUELS

W E Browning

UF_3 Series MTR Capsules

W E Browning H L Hemphill

Two of a series of paired capsules are being irradiated for two weeks each in the MTR to compare UF_3 fuel with UF_4 fuel both in fuel mixtures containing NaF and ZrF_4 Three additional capsules of this series were opened and analyzed chemically[8] and metallographically [9] Two were filled with 2 mole % UF_3 and one with 2 mole % UF_4 fuel One control capsule of each fuel was also opened and analyzed No corrosion could be found in any of these five capsules One earlier UF_4 capsule which had been irradiated for two weeks had showed slight corrosion after irradiation The next four capsules available will have been irradiated three times as long (six weeks) and will be more likely to reveal any difference that might exist between the two fuel materials

The starting materials for the UF_3 series have been analyzed for U(III) total U Fe Cr Ni Na and Zr The UF_3 batch had more than 96% of its uranium in the trivalent condition No U(III) could be detected in the 2 mole % UF_4 batch The method of analysis is sensitive to 0 005% U(III) These analyses were performed by the Y 12 Analytical Laboratory Chemical analyses of MTR capsules of the UF_3 series were subjected to statistical analysis Uranium iron chromium and nickel compositions were averaged for starting materials control salts and irradiated salts and ratios were computed to determine whether there were changes in distribution or composition The results are shown in Table 2 It can be seen that there was no significant uranium segregation or change in concentration of U Fe Cr or Ni

A method of determining iron contamination by radioassay has proved to be quite successful Four samples of fuel salt from irradiated capsules were tested and it was found that between 70 and 99% of the iron had not been irradiated A sample from the Inconel of an irradiated capsule showed less than 6% of the iron to be unirradiated This shows that most of the iron detected in chemical analyses is from contamination during or after opening of the capsule The amount of iron contamination involved is very small only about 50 μg A speck of iron only 0 01 in in diameter would be enough to explain all the iron detected Possible sources of contamination include the steel drill used to remove salt from the capsule rust and metal dust from tools and machinery and impurities in reagents used in preparing sample solutions This experiment shows that the following sources contribute a relatively small part of the total iron contamination in starting material or during capsule filling Inconel dissolved from the capsule walls during irradiation and Inconel from the capsule during opening If a nonferrous drill is used to remove salt from the capsule the operation will probably

[7] M T Robinson *Solid State Semiann Prog Rep Feb 28 1954* ORNL 1677 p 27

[8] Chemical analyses by the General Analys s Laboratory Analytical Chemistry Division

[9] Metallographic analyses by the Remote Metallography Group Solid State Division

TABLE 2. SUMMARY OF ANALYTICAL RESULTS FOR UF_3 SERIES

Capsule Category	Number of Capsules	Uranium Distribution $U_A{}^a$ av / U_B av	Uranium Change[b] U_f l / $U_{it\ al}$	Change in Impurity Concentration[b] Fe_f l / $Fe_{t\ l}$	Cr_f l / $Cr_{n\ t\ l}$	Ni_f l / $Ni_{t\ l}$
All capsules in series	7	1 003 ± 0 028	1 021 ± 0 022	1 47 ± 1 47	1 08 ± 1 08	c
All irradiated capsules	5	1 021 ± 0 033	1 038 ± 0 024	1 45 ± 1 45	0 48 ± 1 5	1 48 ± 0 56
All control capsules	2	0 96 ± 0 0240	0 989	1 53 ± 1 53	3 0 ± 1 2	c
2 mole % UF_4 irradiated	2	1 026 ± 0 044	1 031	1 67 ± 1 47	0 ± 1	3 9 ± 1 1
2 mole % UF_4 control	1	0 947 ± 0 028	0 975 ± 0 024	c	c	c
2 mole % UF_3 irradiated	3	1 001 ± 0 048	1 051	1 31 ± 1 31	0 54 ± 0 6	0 95 ± 0 5
2 mole % UF_3 control	1	0 972 ± 0 020	0 994	1 53 ± 1 53	3 0 ± 1 2	c

[a] U_A is the uranium in the center core and U_B is the uranium in the outer core

[b] Confidence limits are at 95% level

[c] These values were influenced by a sample which was probably contaminated with Inconel and are not significant

be very reliable Tungsten carbide drills now on hand have been tested spectrographically and were found to contain only a trace of iron In order to avoid the risk of breaking a drill in an irradiated capsule the drills must be tested on cold samples Unfortunately this radioassay method cannot be applied to chromium and nickel because of unfavor able activation yields detection sensitivities or chemical separation efficiencies for these elements The most likely sources of these elements also contain iron therefore if contamination by inert iron is eliminated it may be assumed that the remaining chromium and nickel come from the cap sule Since the amount of iron removed from the capsule wall by abrasion is slight it may be assumed that only small amounts of nickel and chromium in the salt come from this source Radio assays were performed by G W Smith of the Analytical Chemistry Division

UF_4 MTR Capsules

W E Browning H L Hemphill

Chemical analyses of four additional 4 mole % UF_4 capsules were received Uranium analyses of inner cores and outer cores of the samples agreed within 6% Iron chromium and nickel concentrations were between 0 01 and 0 1% Additional capsules of this type are being prepared for irradiation in the MTR at 1500°F for control runs and for thermal cycling tests

MTR Capsule Irradiation Facility

W E Browning H L Hemphill

A revision in the capsule cooling design was put into service A cooling annulus sleeve is mounted on each capsule (see Fig 16) before it is shipped to the MTR This annulus sleeve fits into the bottom of the air tube in the ORNL 2b facility in such a way that the air is forced through the sleeve and over the capsule Annulus alignment is thus done outside the reactor so that it can be inspected visually The sleeve can be removed readily in the hot cells after irradiation and the procedure of opening the capsule is then the same as before

A new capsule control panel was fabricated and was tested with an electrically heated simulated capsule and optimum adjustments were made for thermal stability The panel was then put into service at the MTR The system which includes the capsule in the reactor the controller the air control valve and the cooling air tube is inherently unstable as far as capsule temperature is concerned This is because the capsule temperature can change faster than the controller can change the

UNCLASSIFIED
SSD C 1097
ORNL LR DWG 4407

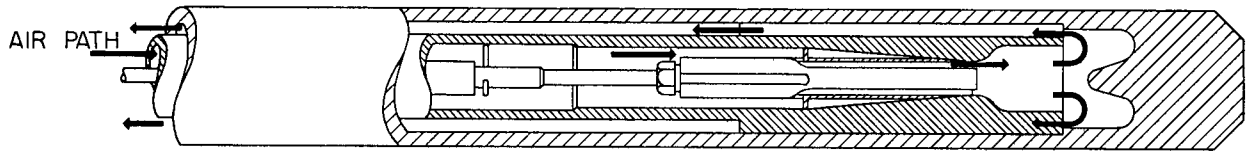

IRRADIATION TUBE WITH CAPSULE INSTALLED

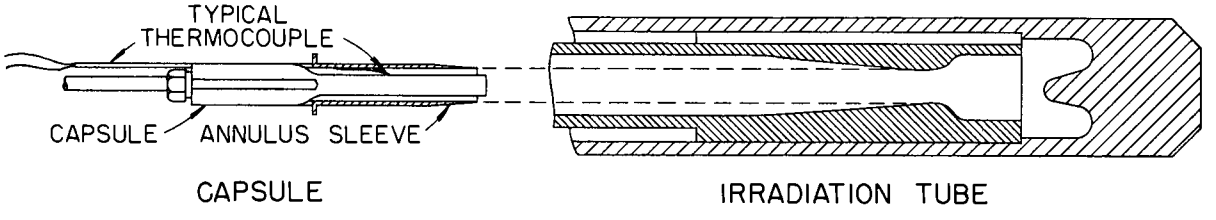

IRRADIATION TUBE WITH CAPSULE REMOVED

Fig 16 Revised MTR Capsule Irradiation Facility (*A*) Capsule installed (*B*) capsule removed

control valve As a result capsule power fluctu ations tend to excite thermal oscillation which would continue indefinitely if not damped The new control panel features a derivotive action a proportional control and a fast reset to quench such oscillations

Improved thermocouples for measurement of the outer surface temperature of MTR capsules have been developed and tested The thermocouples are made by techniques worked out by R J Fox of the Central Machine Shops Two techniques were tested Both use a conventional resistance spot welder set at very low current for ½ cycle duration One type of thermocouple (see Fig 17) is made by crossing the Chromel and Alumel wires (0 010 in dia) and passing current through them to the cap sule The other type is made in the same way but with the wires laid parallel and side by side on the capsule The new thermocouples were tested in an apparatus very similar to that used by Morgan Willis and Osborne in earlier tests on thermo couples [10] The Inconel tubing that simulated the capsule was electrically resistance heated with up to 400 amp of current Some modifications were made in the apparatus to provide for easy changing of individual thermocouples Air flow was measured with a rotameter Pressure corrections were made in rotameter readings True surface temperature was measured with a Leeds & Northrup optical pyrometer through a quartz tube which comprised the outer wall of the air annulus All measurements were made near 800°C so the correction for emissivity of Inconel was constant +10°C for a

[10] J G Morgan W R Willis and M F Osborne *Solid State Semiann Prog Rep Feb 28 1954* ORNL 1677 p 22

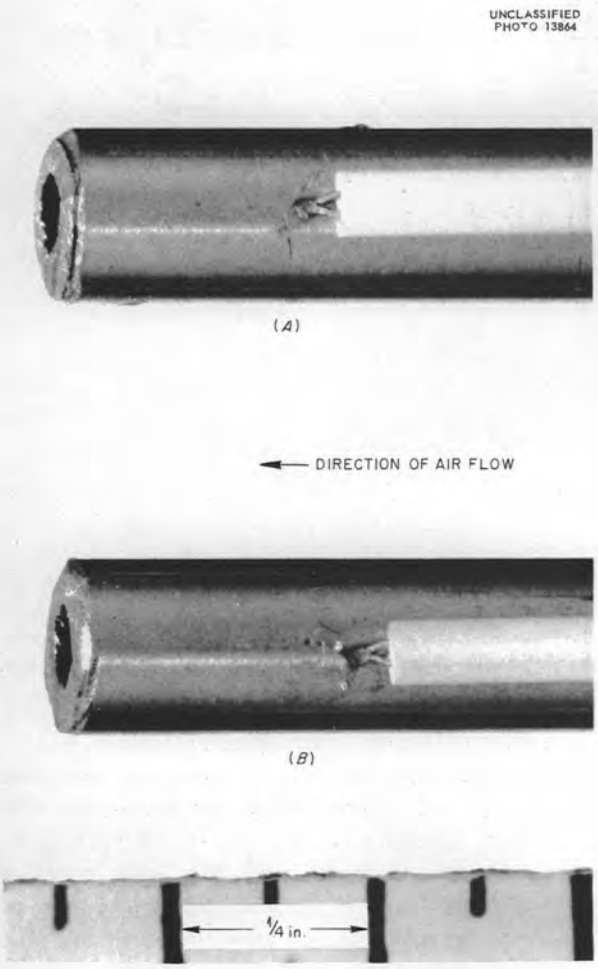

Fig. 17. Resistance-Welded Thermocouples. (*A*) Trimmed; (*B*) as-welded.

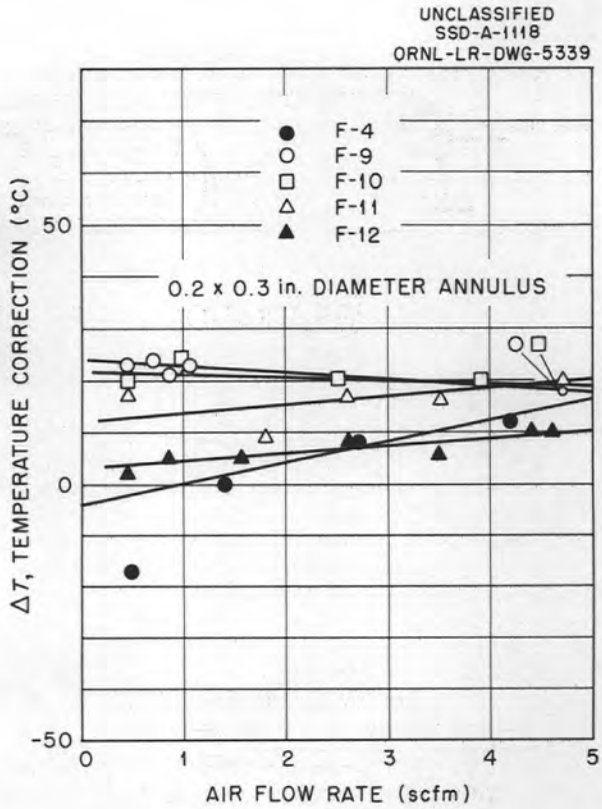

Fig. 18. Temperature Corrections vs Air Flow Rate for Resistance-Welded, Cross-Type Thermocouples at 800°C.

spectral emissivity of 0.85. Thermocouple output was measured with a Brown Electronik recorder. The value (corrected pyrometer reading minus thermocouple reading) was determined for each thermocouple for a point immediately adjacent to the thermocouple bead.

Five thermocouples of the cross type, three of the parallel type, and three thermocouples made by H. E. Robertson with the use of a spark-discharge welding technique were tested for air flow rates from 0.5 to 5 scfm in the 0.2 × 0.3 in. air annulus. Figure 18 shows the results obtained for cross-type thermocouples, and Fig. 19 shows the results obtained for parallel-type thermocouples. The correction in each case is 0 to 20°C for all values of air flow. If a temperature correction of 10°C is added to the thermocouple reading, the surface temperature is known within ±10°C. Figure 20 shows the results for cross-type thermocouples made by the new technique compared with the results for spark-discharge-type thermocouples and compared with the results obtained by Willis and Osborne in their earlier tests.[10] Thermocouple R-13 is one in which minute inspection revealed a defect, a 0.001-in. crack between the bead and the capsule. It is shown because routine inspection might not have revealed the flaw; it had escaped four previous inspections before being spotted on the fifth. Data from this thermocouple would have been rejected when compared with those from other thermocouples on the same capsule. It is gratifying to observe how closely the results for the other two thermocouples, R-15 and R-16, match those of

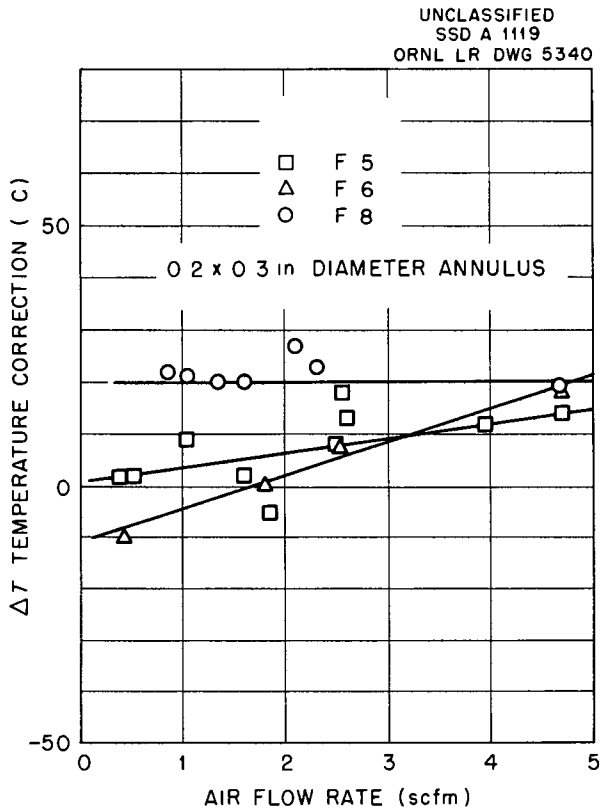

Fig 19 Temperature Corrections vs Air Flow Rate for Resistance-Welded, Parallel Type Thermocouples at 800°C

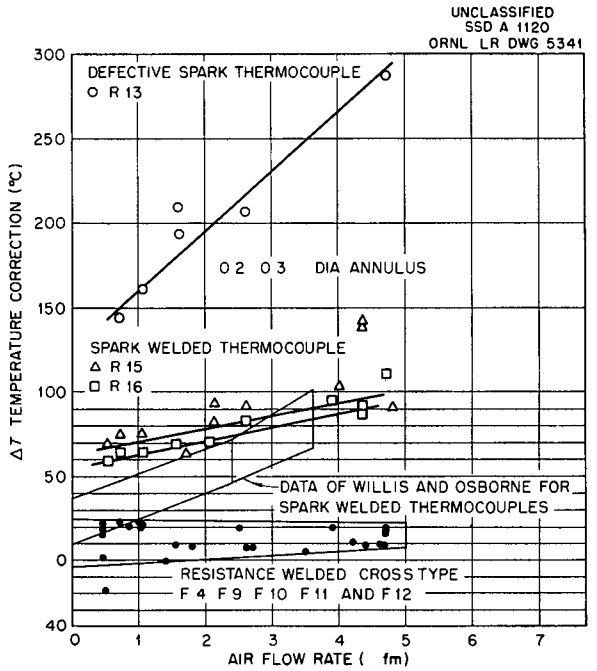

Fig 20 Temperature Corrections at 800°C vs Air Flow Rate for Various Types of Thermocouple Construction

Willis and Osborne even though they were obtained more than nine months later What little difference exists can be explained for a given volume flow rate by the difference in linear velocity that results from displacement of the annulus cross sectional area by thermocouple leads These tests were run with four thermocouples on each specimen the earlier tests used only one Figure 20 indicates that H E Robertson s thermocouples (R 15 and R 16) were as reproducible as has been believed The new types of thermocouples are even more reproducible and are not sensitive to air flow

Ruggedness of the various thermocouples was determined qualitatively by visual inspection general handling and deliberate pulling The cross type appears to be more durable and the parallel type less durable than spark discharge thermocouples Thermocouple life was determined by using several of the cross type thermocouples in testing the new ORNL 2b panel for the MTR The thermocouples were maintained at 800°C or above for about 150 hr and were subjected to more fluctuations in temperature and air flow than would be expected in years in the MTR At the end of this test the thermocouple wires were rather fragile but beads and adjacent wires remained intact in destructive tests This indicates that the thermocouple is as rugged as can be obtained with 0 010 in dia Chromel Alumel wire

The new thermocouples will be put into service on one of the capsules in February 1955

METHODS FOR TRANSFERRING AND SAMPLING MOLTEN SALTS AND IRRADIATED FUEL MATERIALS

C C Webster

Facility for Handling Irradiated Dynamic Corrosion Loops

C C Webster T L Trent
A F Zulliger[11] B M Glass[11]

The shield for transporting the vertical dynamic corrosion loop from the reactor will be rolled into position behind cell 6 of Building 3025 and alignment will be made with the hole in the back door

[11]Engineering and Mechanical Division

of the cell (Fig 21) The can with the loop pump assembly will be pushed into the cell through the hole and grasped with the jaws of the metal cutting band saw and then will be pulled in the cell from the front The can will be cut off in sections and then the loop will be cut from the pump After the

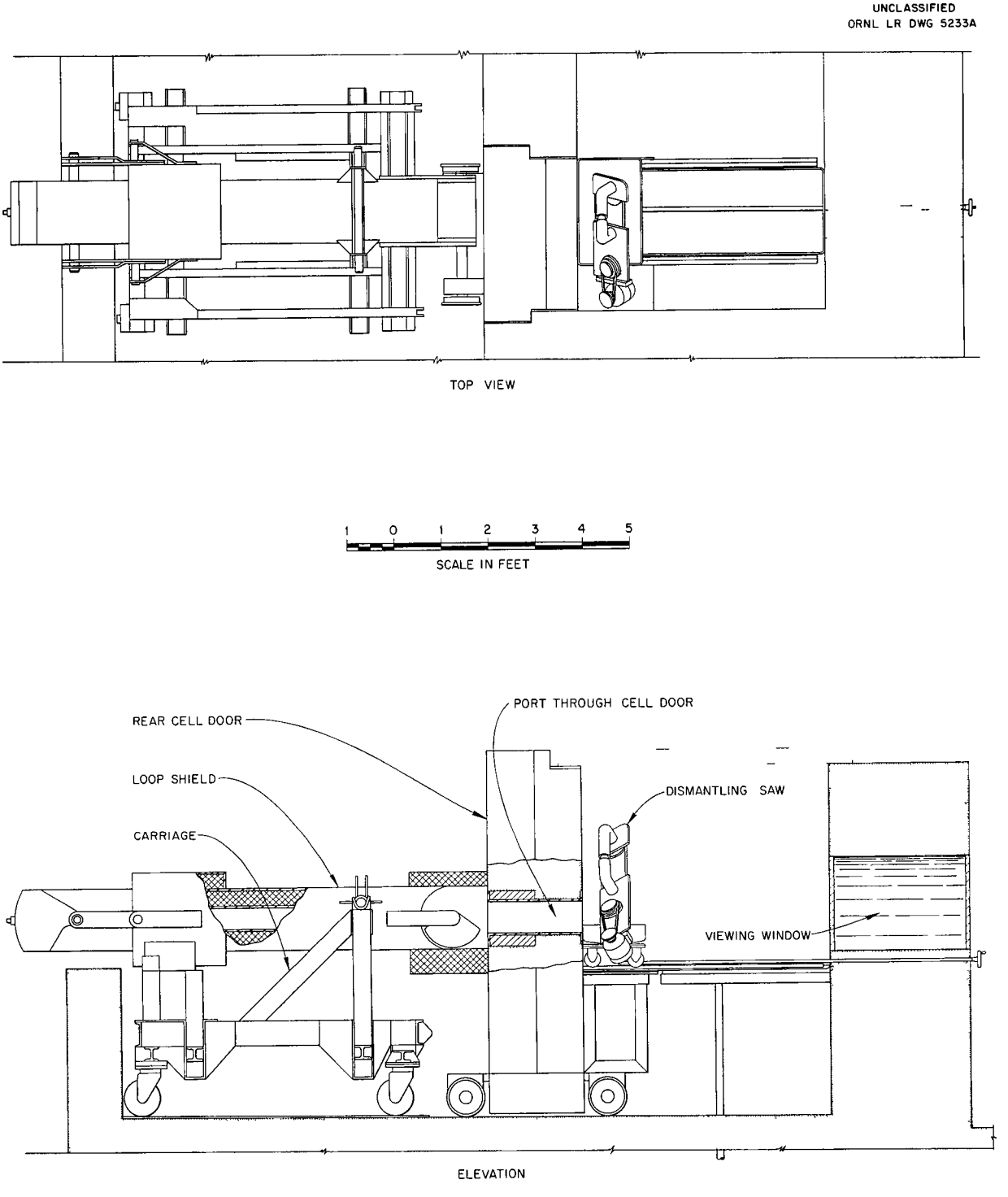

Fig 21 Transfer Cask in Position to Unload Vertical Dynamic Corrosion Loop into Cell 6

loop pump and motor are removed the can and other extra material will be put back into the shield and transported to the burial ground

Additional lead shielding has been put around the hole in the back door of cell 6 and a lead shield has been built up around the nose of the carrier to protect personnel from irradiation A small shield will be built up on a dolly underneath the cell table the shield will contain a disposable can to hold waste material which accumulates during the cutting up of the loop a d pump

Fused Salt Transfer Equipment

C C Webster

The equipment described earlier[12] has been modified (see Fig 22) to give a much better controlled transfer of the fused salts A new type of metering tank controls the volume of material transferred to ±5 cc by means of probes for liquid level indicators An alternating current is used with the probes to prevent electrolytic corrosion by the molten salt The temperature of the molten salt transfer lines is maintained by resistance heating the current is supplied by a transformer attached to the unit At the end of the transfer operation a frozen seal is used to cut off the flow Liquid nitrogen is poured onto the hot transfer line to make this seal A relay and switch arrangement is used to turn off the current to the lines and to start the flow of liquid nitrogen With this system 30 sec from the time that the switch is actuated the temperature of the transfer line has dropped from 700°C to below the freezing point of water

A differential pressure indicator has now been installed in the system to give a better indication of the pressures and the points at which they are being applied This decreases the error involved in equalizing the pressure on the two containers of fuel at the end of the transfer By use of the new method of freezing off the transfer line and the differential pressure gage the flow of the molten salt can be kept under control at all times and can be stopped at will

A sintered nickel filter has been installed on each side of the metering tank to assure the purity of the material transferred to the final container Smaller furnaces have been installed for the various component parts of the system

[12] W E Browning and C C Webster *Solid State Semiann Prog Rep Aug 30 1954* ORNL 1762 p 49

Hot Cell Dismantling Equipment for Corrosion Loops

C C Webster A F Zulliger

In order to examine the miniature dynamic corrosion loops after irradiation and to recover the uranium bearing fuel several pieces of special equipment are needed The dismantling must be done in a hot cell The equipment for cutting up the loop and pump had to be of such a nature that it could be used to cut open the stainless steel can containing the loop pump assembly to cut up the loop and the air annulus around it to separate the pump from the loop and from the motor and then to slit the motor and the pump lengthwise if desired The salt must be removed from both the loop and pump for recovery Any portion of metal used for metallographic study must have had the salt removed

The metal cutting equipment must be mounted so that it can be used at the back of the cell for cutting off the can and the loop and then moved to the front of the cell for more detailed work and for maintenance It must be possible to do all maintenance remotely with the manipulators The final part of the installation must be done with the manipulators Provision must be made to prevent the spread of fission products or other radioactive dust

It was decided that it would be advantageous to use a metal cutting band saw (Wells No 49A) modified (see Fig 23) for the special type of operation A high speed steel saw blade with 32 teeth to the inch will cut the thin pieces of metal as required Specially built electric furnaces will be used to remove the salt from the dismantled loop and the pump under a helium atmosphere

The saw is mounted on a dolly with a pan under the entire travel of the blade for catching the cutting fluid and radioactive particles that drop from the saw A pump supplies the cutting fluid to the saw blade at the point of cutting The saw then passes through felt brushes to remove the liquid and radioactive material Provision is made to run the liquid from the pan to the hot waste drain and then to flush off both the tray and the saw The saw will have a vise with floating jaws operated by separate air cylinders to provide for clamping various sizes of pieces

The saw can be moved along tracks to the front of the cell for replacing blades and for more detailed

UNCLASSIFIED
PHOTO 13734

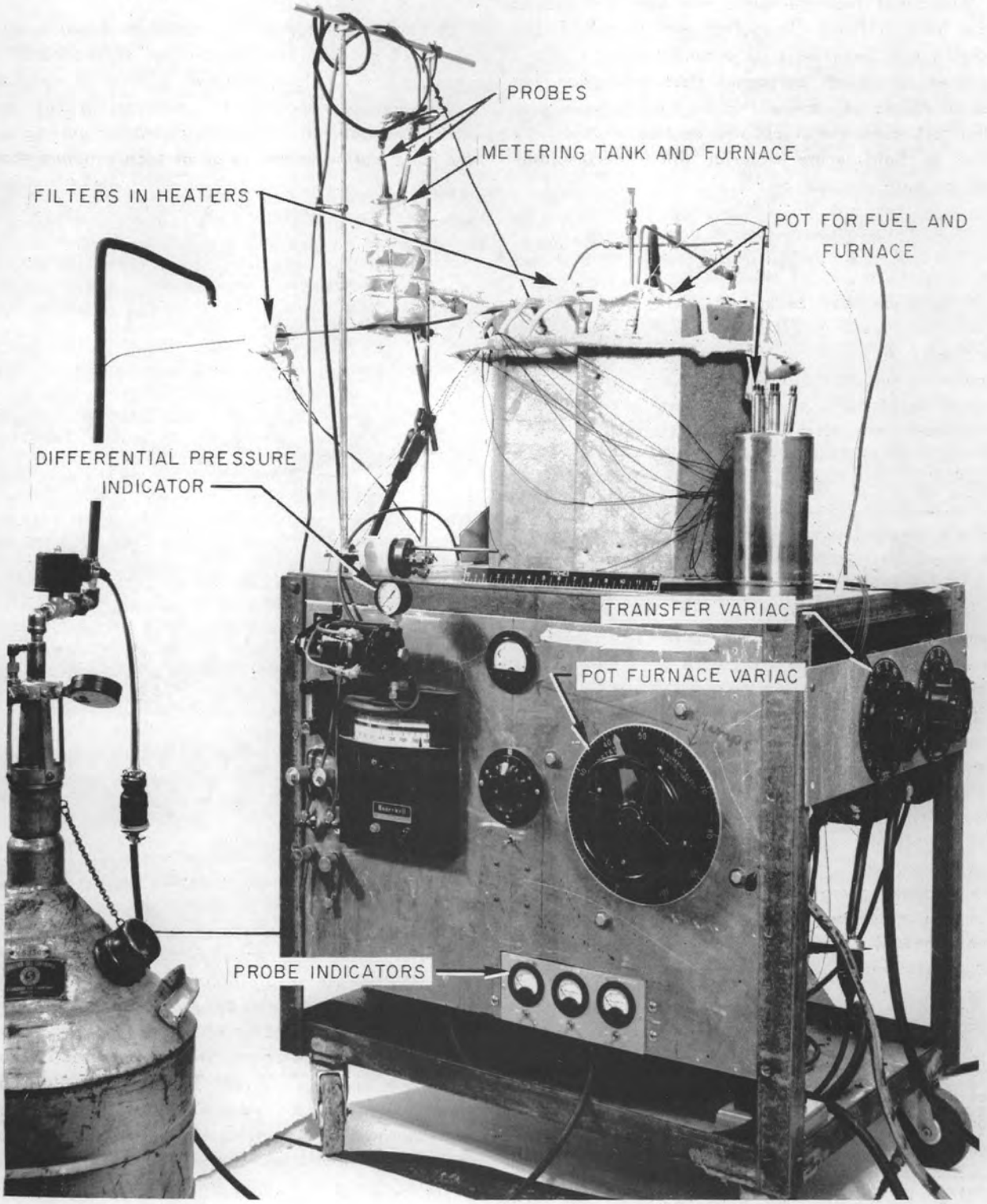

Fig. 22. Fused-Salt Metering Equipment.

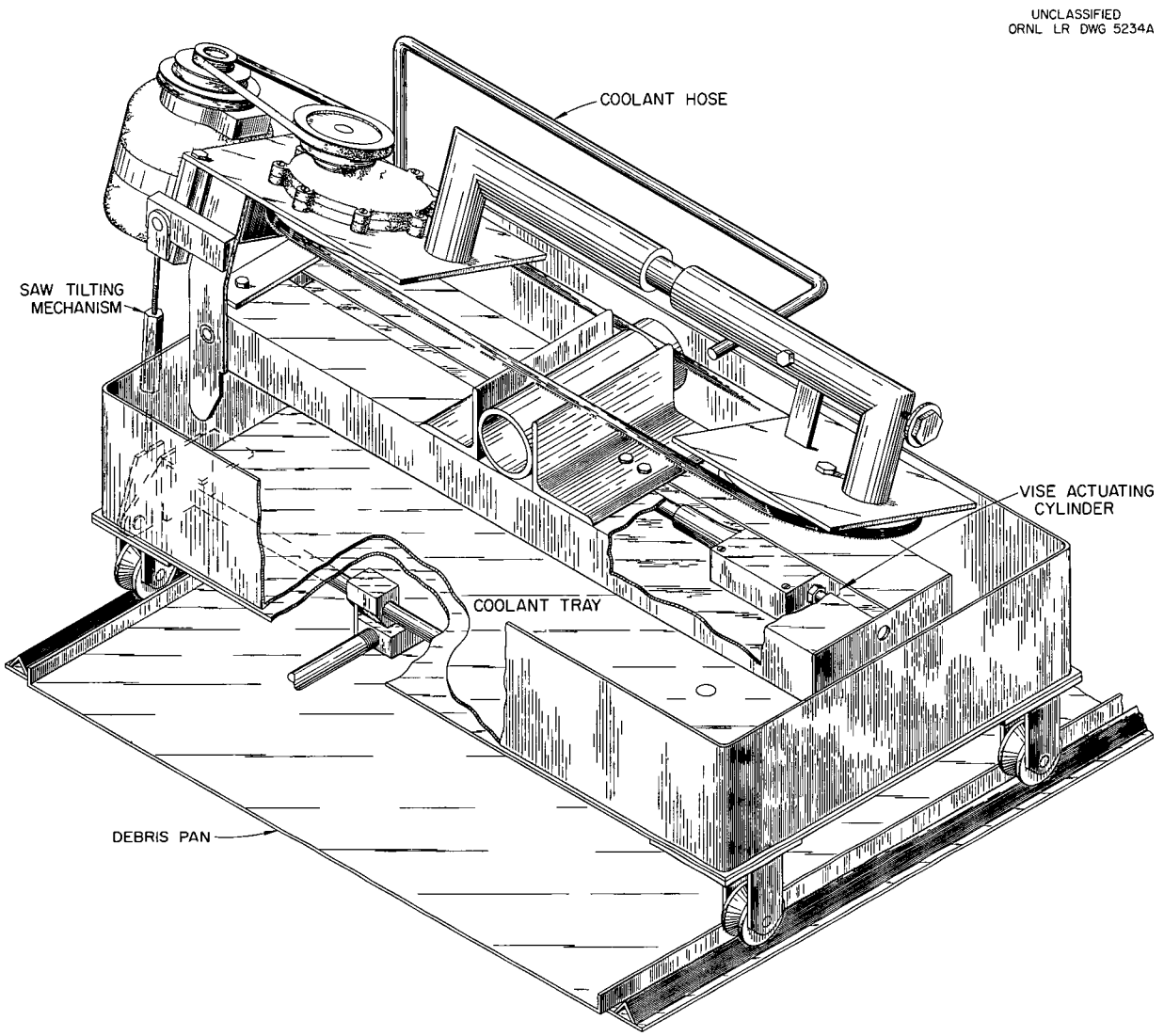

Fig 23 Modified Hot-Cell Band Saw

cutting A tray is provided between the tracks for catching insulation wires and other waste materials To reduce personnel irradiation the saw is provided with electrical and air connections easily accessible to the manipulator for remote connection and disconnection

A pump furnace (Fig 24) is being constructed for removing the irradiated fuel from the pump and curved portions of the loop The pump (with either the bottom cut off or split lengthwise) will be placed in the seal can which will be evacuated with a mechanical pump located inside the hot cell and then will be refilled with pure helium The fuel will be melted out and will flow through the grid plate supporting the pump and will be collected in the bottom of the inner can The inner can and the sealed can are made of type 347 stainless steel with a copper gasket seal

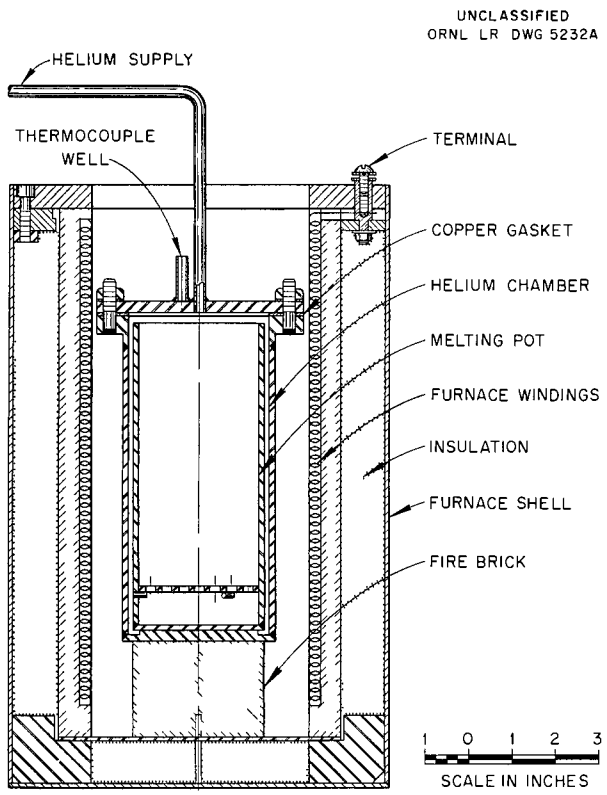

Fig 24. Pump Furnace

A tube furnace (Fig 25) is being constructed for removing the fuel remotely from straight sections of the loop A portion of the loop will be placed in the quartz tube as shown The entire unit will be evacuated and then refilled with pure helium outside the furnace A vacuum will then be applied at the lower end of the tube and a low helium pressure will be applied at the top While this operation is being performed the furnace will have attained the proper temperature The furnace will then be swung into position around the quartz tube containing the tube of fuel During the rest of the operation the vacuum pump will be evacuating the bottom end of the quartz tube and a constant helium pressure will be kept at the top of the tube This type of operation will overcome the effect of surface tension and will cause the fuel to come out of the metal tube in the form of a slug or a bar Melting the salt out in this manner gives a cleaner metal surface and results in a better metallographic specimen Water cooling of the tapered joints is necessary because they must be greased for remote operation

The salt sampling for chemical analysis will still be done by drilling out as described previously [13 14] The metallographic samples will be prepared on the tube slitting machine described earlier [15]

EFFECT OF IRRADIATION ON THE UF_6 C_7F_{16} SYSTEM

W E Browning J B Dee[17]
D K Trubey[16] W A Steyert[16]
G W Keilholtz

Uranium hexafluoride dissolved in C_7F_{16} is a material which was being considered by the Shielding Section for short lived fission product studies of simulated circulating liquid fuel reactors In order to measure the radiation damage resistance of this material six welded nickel capsules were filled under a vacuum with a 20 wt % solution of UF_6 C_7F_{16} and were then irradiated in water cooled facilities in the ORNL Graphite Reactor and in the Tower Shielding Facility Three of the capsules were exposed to $1\ 1 \times 10^{17}$ thermal neutrons/cm^2 [18] The other three were exposed for $2\ 9 \times 10^{15}$ thermal neutrons/cm^2 As much as 90% of the volume of the capsules was filled with a gray green solid residue for the two exposures 92 and 24% respectively of the uranium were found in this residue The capsules which were given the higher exposures developed gas pressures between 55 and 100 psi These gases analyzed about 30% CF_4 and about 25% C_2F_6

It was concluded that UF_6 dissolved in C_7F_{16} is not sufficiently resistant to irradiation for its proposed purpose Therefore it was decided not to use this material for the shielding test

PLATING OF FISSION PRODUCTS ON CONTAINER WALLS

C C Webster D E Guss

Existing MTR capsules and irradiated salt samples were used in a series of activity measurements to

[13] J G Morgan *et al* *Solid State Semiann Prog Rep Aug 31 1953* ORNL 1606 p 40

[14] C C Webster and J G Morgan *Solid State Semiann. Prog Rep Feb 28 1954* ORNL 1677 p 27

[15] C C Webster *Solid State Semiann Prog Rep Aug 30 1954* ORNL 1762 p 41

[16] Physics Division

[17] Pratt & Whitney Aircraft Division

[18] W E Browning *Solid State Semiann. Prog Rep Aug 30 1954* ORNL 1762 p 54

[redacted]

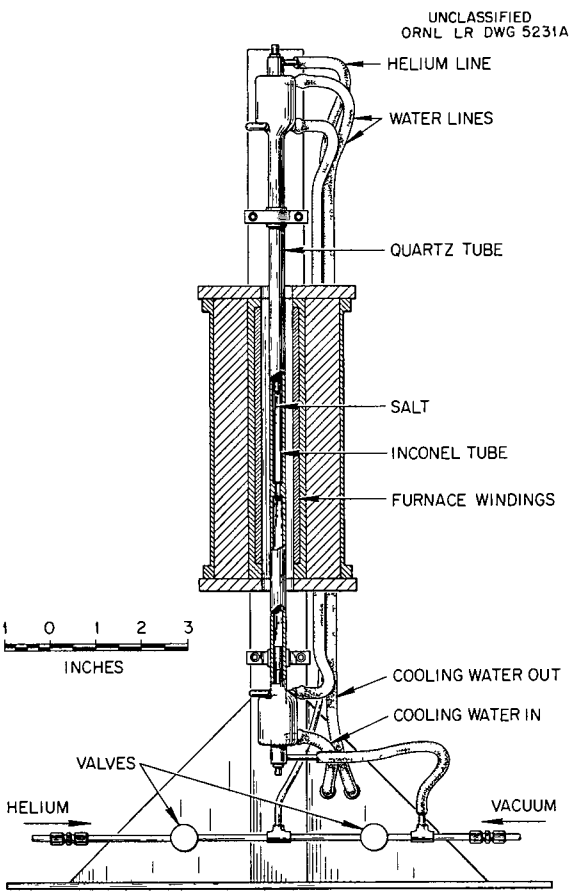

Fig 25 Tube Furnace

determine the distribution of fission products in side the capsules The following irradiated speci mens were examined a metallographic specimen from the fuel chamber mounted in plastic two fuel samples two fuel sample solutions an unmounted metallographic specimen irradiated Inconel and complete capsule with salt

When the activity readings were plotted vs dis tance they obeyed the inverse square law The results were then normalized to give the activity for each specimen in milliroentgens per hour at a distance of 1 ft

The specific activities of irradiated Inconel and irradiated salt were calculated separately Within experimental error the total activity of each speci men was explained by Inconel plus salt without the necessity of assuming the plating of fission products The evidence therefore indicates that gross fission products detectable six months after irradiation did not plate on the container wall in appreciable quantities Details of the measurements appear elsewhere [19]

[19] C C Webster and D E Guss *Experiment to De termine the Extent to Which Fission Products Plate Out onto the Chamber Walls of Static Capsules* ORNL CF 54 12 135 (Dec 22 1954)

[redacted]