[redacted]

CENTRAL RESEARCH LIBRARY
DOCUMENT COLLECTION

CLASSIFICATION CHANGED TO: Declassified
BY AUTHORITY OF: AEC 1-6-56
BY: [illegible] 8-13-56

ORNL-1949
Special

4A

MARTIN MARIETTA ENERGY SYSTEMS LIBRARIES
3 4456 0349860 4

COST OF URANIUM RECOVERY BY THE AMINE EXTRACTION PROCESS

B. B. Klima
H. M. McLeod, Jr.
A. D. Ryon
R. R. Wiethaup

CENTRAL RESEARCH LIBRARY
DOCUMENT COLLECTION

LIBRARY LOAN COPY

DO NOT TRANSFER TO ANOTHER PERSON

If you wish someone else to see this document, send in name with document and the library will arrange a loan.

OAK RIDGE NATIONAL LABORATORY
OPERATED BY
UNION CARBIDE NUCLEAR COMPANY
A Division of Union Carbide and Carbon Corporation
UCC
POST OFFICE BOX P · OAK RIDGE, TENNESSEE

[redacted]

[redacted]

[redacted]

ORNL-[redacted]

[redacted]

This document consists of 39 pages.
Copy 4 of 304 copies. Series A.

Contract No. W-7405-eng-26

PILOT PLANT SECTION
H. M. McLeod, Jr., Supervisor

MATERIALS CHEMISTRY DIVISION
G. H. Clewett, Director

Edited by
K. O. Johnsson

COST OF URANIUM RECOVERY BY THE AMINE EXTRACTION PROCESS

Authors

B. B. Klima
H. M. McLeod, Jr.
A. D. Ryon
R. R. Wiethaup

Date Issued

SEP 8 1955

OAK RIDGE NATIONAL LABORATORY
Operated by
UNION CARBIDE NUCLEAR COMPANY
A Division of Union Carbide and Carbon Corporation
Post Office Box P
Oak Ridge, Tennessee

[redacted]

MARTIN MARIETTA ENERGY SYSTEMS LIBRARIES

3 4456 0349860 4

[redacted]

[redacted]

1. E. Center
2. Biology Library
3. Health Physics Library
4-5. Central Research Library
6. Reactor Experimental
Engineering Library
7-11. Laboratory Records Department
12. Laboratory Records, ORNL R.C.
13. C. E. Larson
14. L. B. Emlet (K-25)
15. J. P. Murray (Y-12)
16. A. M. Weinberg
17. E. H. Taylor
18. E. D. Shipley
19. G. H. Clewett
W. H. Jordan
C. C. VonderLage
22. A. Swartout
23. S. Lind
24. F. D. Culler
25. A. Hollaender
26. A. H. Snell
27. M. T. Kelley
28. J. A. Lane
29. K. Z. Morgan
30. J. H. Frye, Jr.
31. C. P. Keim
32. R. S. Livingston
33. T. A. Lincoln
34. A. S. Householder
35. C. S. Harrill
36. C. E. Winters
37. D. W. Cardwell
38. E. M. King
39. A. J. Miller
40. D. D. Cowen
41. M. J. Skinner
42. S. J. Cromer
43. G. E. Boyd
44. H. F. Bauman
45. C. A. Blake
46. K. B. Brown
47. F. R. Bruce
48. J. R. Buchanan
49. C. F. Coleman
50. D. J. Crouse
51. V. A. DeCarlo
52. R. H. Guymon
53. W. K. Eister
54. B. B. Klima
55. J. F. Manneschmidt
56-58. H. M. McLeod, Jr.
59. A. D. Ryon
60. W. T. Ward
61. R. R. Wiethaup
62-72. E. J. Murphy
73. R. W. Dodson (consultant)
74. H. Eyring (consultant)
75. J. W. Kennedy (consultant)
76. G. T. Seaborg (consultant)
77. J. H. Rushton (consultant)
78. J. Bigeleisen (consultant)

[redacted]

79-94. H. M. Roth, AEC, ORO
95-304. Technical Information Service, Oak Ridge

[redacted] [redacted]

[redacted]

CONTENTS

1. INTRODUCTION 1

2. COST ESTIMATE DETAILS 9

3. COST OF CLARIFICATION 12

4. COST OF AMINE EXTRACTION 18

4.1 Process description 18

4.2 Cost of extraction, stripping, precipitating, and filtering 24

5. COST OF CALCINING AND PACKAGING 32

[redacted]

[redacted]

COST OF URANIUM RECOVERY BY THE AMINE EXTRACTION PROCESS

1.0 INTRODUCTION

One of the processes developed by the Uranium Chemistry of Raw Materials Section[1,2,3] for the recovery of uranium from clarified sulfuric acid leach liquor by solvent extraction is the Amine Extraction Process which uses specific amines dissolved in kerosene as the uranium extraction agent.

In this process the head liquor (clarified leach liquor) is passed through four mixer-settler units countercurrent to a kerosene solution of the amine, which extracts essentially all of the uranium from the head liquor, and the raffinate (barren liquor) is pumped to a waste disposal pond. The organic extract is then contacted countercurrently in three mixer-settler units with an aqueous solution of sodium chloride to transfer, or strip, the uranium from the organic to the aqueous phase. Uranium is precipitated from the loaded strip solution, filtered, washed, calcined, and packaged for shipment.

Molybdenum is present in small amounts in most Colorado Plateau ores and in appreciable amounts in Marysvale and Arrowhead ores. It is readily extracted by the amine, but will not be stripped from the organic phase by sodium chloride. When processing head liquors that contain a relatively high concentration of molybdenum, a secondary alkaline stripping operation is used in order to prevent a buildup of molybdenum in the organic phase to the detriment of the uranium extraction efficiency. In the process described, a solution of sodium carbonate is used for this purpose. The organic phase from the secondary strip operation is pumped back to the extraction operation to start another cycle. A schematic flow diagram of the process is shown in Fig. 1.

This process has been extensively tested on a pilot scale during the past year and the operating conditions and scale-up factors have been closely defined at flow rates up to 5 gpm with simulated leach liquor. To provide an economic as well as a technical yardstick, a cost estimate was made at the start of the process testing work. It has been revised from

[redacted]

ORNL-LR-DWG 8487

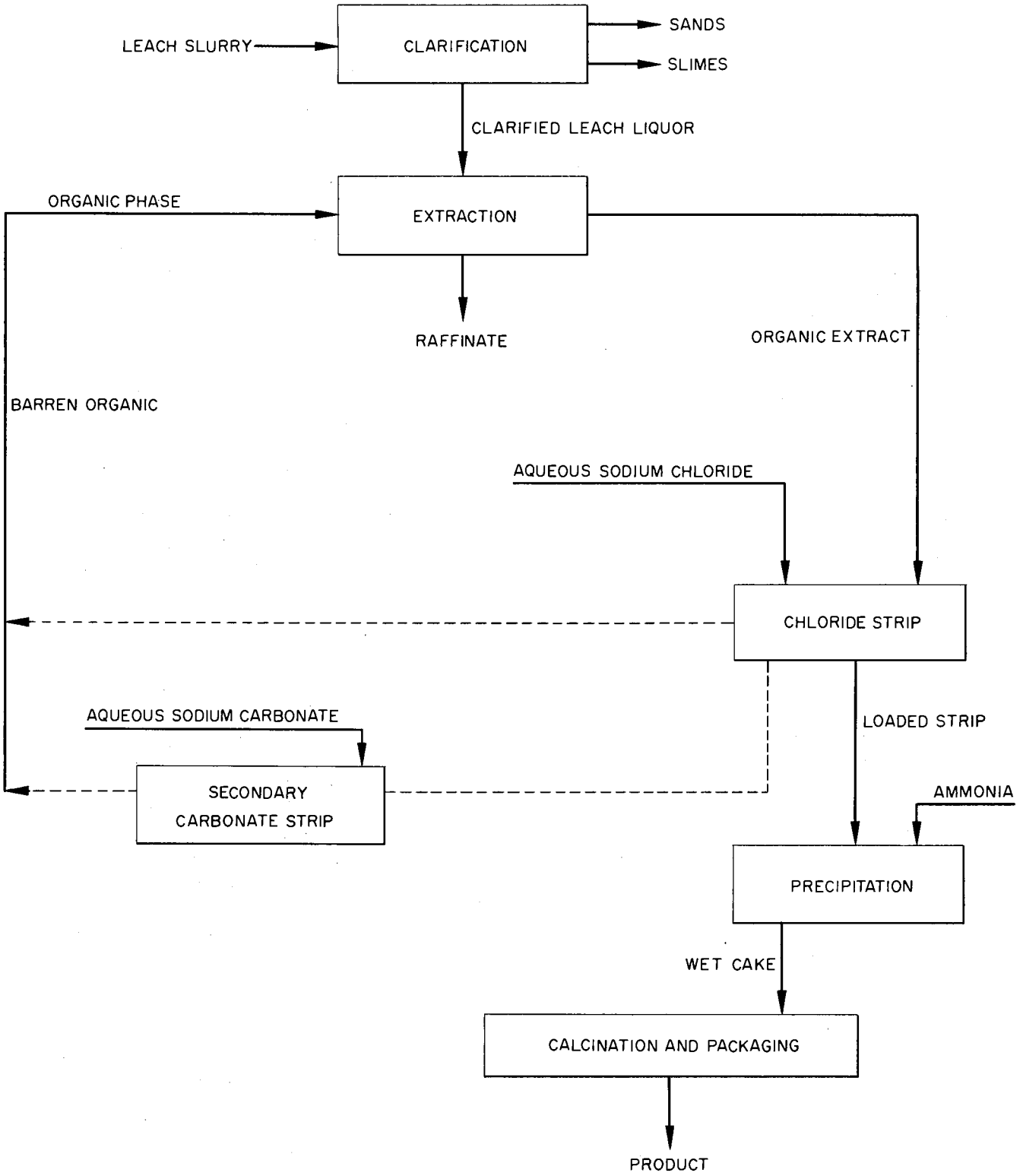

[redacted]

Fig. 1. Schematic Flow Diagram

time to time to show the current costs of each of the unit operations and processes which were studied. This report presents the estimated costs of the recovery of uranium from clarified sulfuric acid leach liquor by the amine extraction process, in accordance with the results of the process testing work through June 15, 1955.

At a production rate of 200 tons of ore per day the estimated costs of recovery were \$0.67 per pound of U_3O_8 with no secondary strip and \$0.72 per pound with 100% secondary strip as shown in Table 1. These costs include direct operating costs and amortization, but no overhead. They include the processing steps associated with clarification, solvent extraction, uranium precipitation, calcination, and packaging of product as shown in Fig. 2.

The recovery costs are also shown in Table 2 on a per ton of ore basis and in Table 3 on a daily basis. The cost of the plant facility is shown in Table 4.

TABLE 1. COST OF RECOVERY PER POUND OF U_3O_8

WITH AND WITHOUT SECONDARY STRIP

	Cost of Clarification[1/]	Cost of Amine Extraction[2/] Without Secondary Strip	Cost of Amine Extraction[2/] With Secondary Strip	Cost of Calcining and Product Packaging[3/]	Total, Without Secondary Strip	Total, With Secondary Strip
Labor						
Operating	$0.048	$0.144	$0.144	$0.006	$0.198	$0.198
Maintenance	0.024	0.020	0.023	0.003	0.047	0.050
Supplies						
Operating	0.019	0.061	0.095	0.025	0.105	0.139
Maintenance	0.030	0.026	0.028	0.004	0.060	0.062
Utilities	0.006	0.015	0.016	0.001	0.022	0.023
Total Operating Cost	$0.127	$0.266	$0.306	$0.039	$0.432	$0.472
Amortization	0.119	0.101	0.113	0.016	0.236	0.248
Total	$0.246	$0.367	$0.419	$0.055	$0.668	$0.720

1/ For details see Table 6.

2/ For details see Table 11.

3/ For details see Table 17.

[redacted]

ORNL-LR-DWG 8488

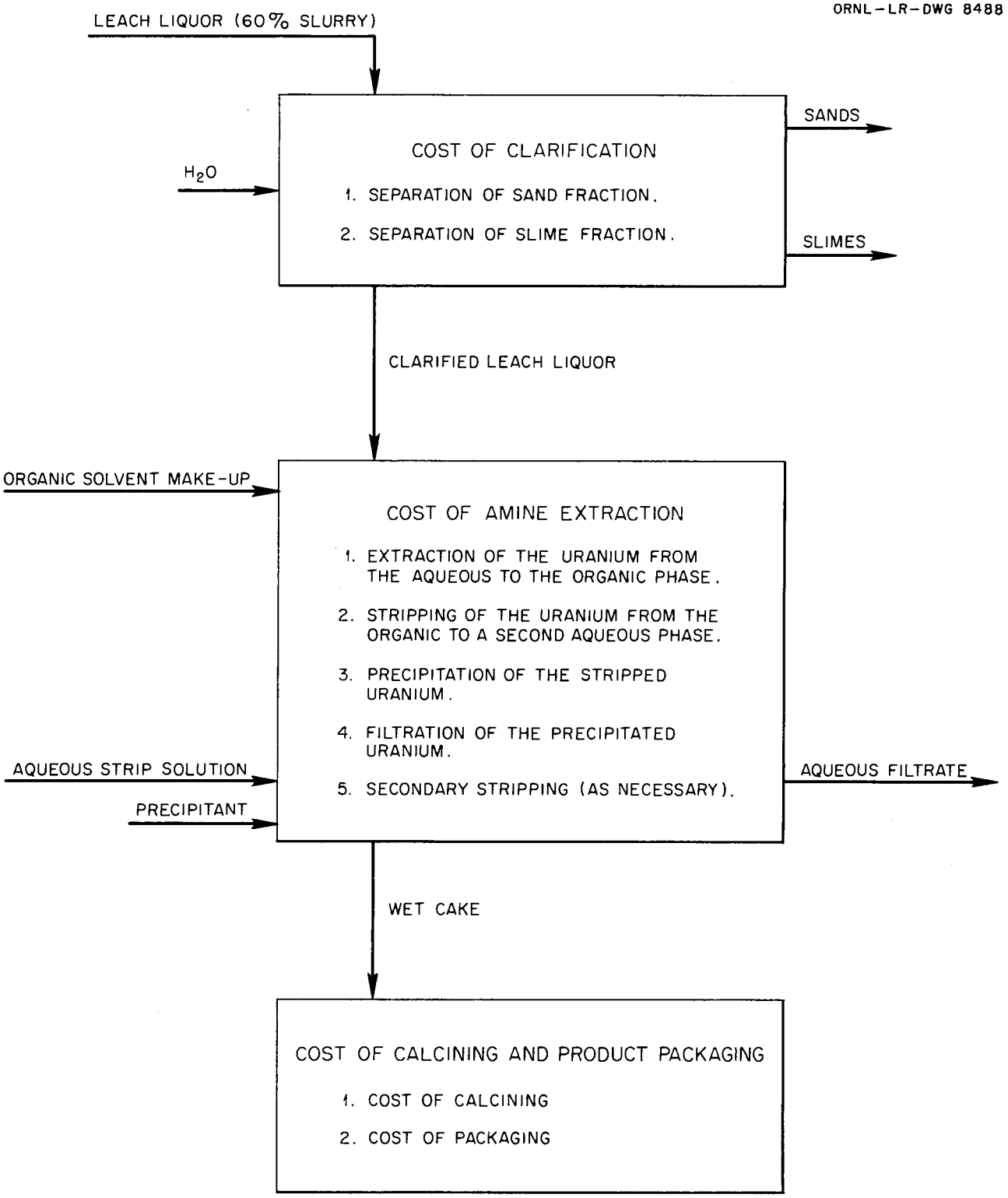

[redacted]

Fig. 2. Cost of Amine Extraction.

TABLE 2. COST OF RECOVERY PER TON OF ORE WITH AND WITHOUT SECONDARY STRIPPING

	Cost of Clarification[1]	Cost of Amine Extraction[2] Without Secondary Strip	Cost of Amine Extraction[2] With Secondary Strip	Cost of Calcining and Product Packaging[3]	Total, Without Secondary Strip	Total, With Secondary Strip
Labor						
Operating	$0.27	$0.81	$0.81	$0.03	$1.11	$1.11
Maintenance	0.13	0.11	0.12	0.02	0.26	0.27
Supplies						
Operating	0.11	0.35	0.53	0.14	0.60	0.78
Maintenance	0.17	0.14	0.16	0.02	0.33	0.35
Utilities	0.03	0.09	0.09	0.01	0.13	0.13
Total Operating Cost	$0.71	$1.50	$1.71	$0.22	$2.43	$2.64
Amortization	0.66	0.56	0.64	0.09	1.31	1.39
Total	$1.37	$2.06	$2.35	$0.31	$3.74	$4.03

1/ For details see Table 6.

2/ For details see Table 11.

3/ For details see Table 17.

TABLE 3. COST OF RECOVERY PER DAY

WITH AND WITHOUT SECONDARY STRIP

	Cost of Clarification[1]	Cost of Amine Extraction[2]		Cost of Calcining and Product Packaging[3]	Total, Without Secondary Strip	Total, With Secondary Strip
		Without Secondary Strip	With Secondary Strip			
Labor						
Operating	$ 54.00	$162.00	$162.00	$ 6.75	$222.75	$222.75
Maintenance	26.60	22.62	25.38	3.59	52.81	55.57
Supplies						
Operating	21.20	69.12	105.95	28.63	118.95	155.78
Maintenance	33.25	28.28	31.72	4.49	66.02	69.46
Utilities	6.60	17.03	17.65	0.96	24.59	25.21
Total Operating Cost	$141.65	$299.05	$342.70	$44.42	$485.12	$528.77
Amortization	133.02	113.12	126.90	17.97	264.11	277.89
Total	$274.67	$412.17	$469.60	$62.39	$749.23	$806.66

1/ For details see Table 6.

2/ For details see Table 11.

3/ For details see Table 17.

TABLE 4. COST OF URANIUM RECOVERY FACILITY WITH AND WITHOUT SECONDARY STRIP

	Cost of Clarification Facility[1]	Cost of Amine Extraction Facility[2] Without Secondary Strip	Cost of Amine Extraction Facility[2] With Secondary Strip	Cost of Calcining and Product Packaging[3] Facility	Total, Without Secondary Strip	Total, With Secondary Strip
Cost of Installed Process Equipment	$138,152	$ 78,815	$ 90,415	$ 14,552	$231,519	$243,119
Piping Costs	9,671	23,645	27,125	1,019	34,335	37,815
Instrumentation	4,145	2,364	2,712	437	6,946	7,294
Electrical Wiring	1,250	3,640	4,030	175	5,065	5,455
Manufacturing Building	17,000	39,000	41,000	7,100	63,100	65,100
Footings and Foundations	6,908	3,941	4,521	728	11,577	12,157
Painting and Scaffolding	2,763	1,576	1,808	291	4,630	4,862
Total Direct Cost	$179,889	$152,981	$171,611	$ 24,302	$357,172	$375,802
Engineering and Field Expense	17,989	15,298	17,161	2,430	35,717	37,580
Contingency	19,788	16,828	18,877	2,673	39,289	41,338
Contractor's Fee and Overhead	21,766	18,511	20,765	2,941	43,218	45,472
Total Construction Cost	$239,432	$203,618	$228,414	$ 32,346	$475,396	$500,192

1/ For details see Table 7.
2/ For details see Table 13.
3/ For details see Table 18.

2.0 COST ESTIMATE DETAILS

The costs are presented in accordance with the general outline that was described in ORNL-1927. As shown in Fig. 3, they include:

(1) Cost of Clarification,

(2) Cost of Amine Extraction,

(3) Cost of Calcining and Packaging of Product.

The criteria for the over-all plant design may be found in Table 5. The criteria for the specific processes are given under the appropriate sections.

The recommendations contained in "Suggested Procedure for Economic Evaluation for Uranium Recovery Plants," Grand Junction Operations Office, AEC, were followed except as noted in ORNL-1927.

[redacted]3489

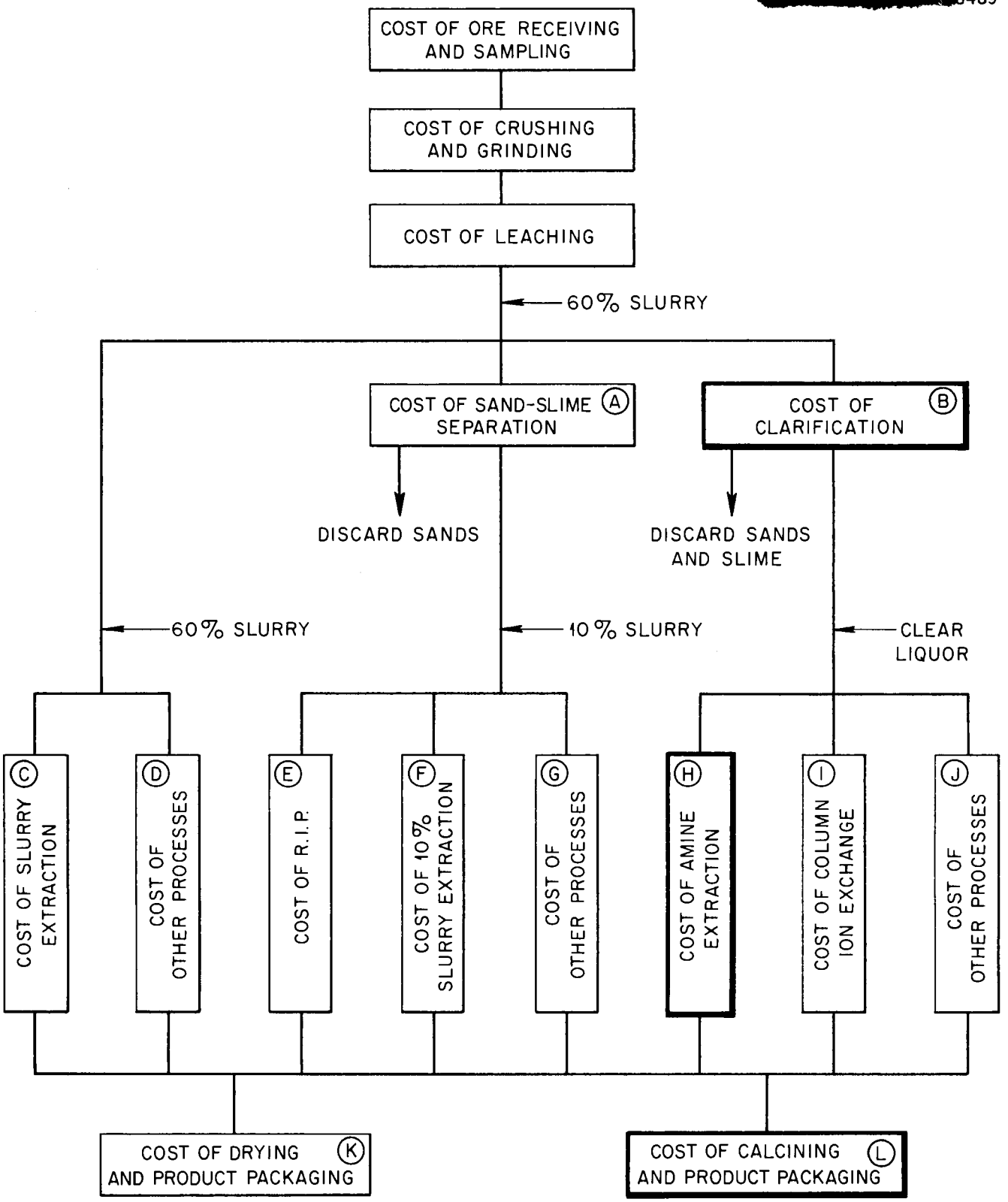

[redacted]

Fig. 3. Diagram Showing the Relationship Between Cost Estimates of Various Steps in the Recovery Processes for Several Methods of Uranium Recovery.

[redacted] [redacted]

TABLE 5. OVER-ALL PLANT CRITERIA

Location of Plant - - - - -	Grand Junction, Colorado
Plant Capacity - - - - - -	200 tons of ore per day
Assay of Ore - - - - - - - -	0.30% U_3O_8 (6 lb per ton of ore)
Clarified Liquor Rate - - -	2 tons liquor per ton of ore
U_3O_8 in Liquor - - - - - -	94% of U_3O_8 in ore
Leach Slurry Composition -	60% solids
Sand Content of Solids - -	70%
Slimes Content of Solids -	30%

[redacted] [redacted]

[redacted] [redacted]

3.0 COST OF CLARIFICATION

The countercurrent decantation process shown in Fig. 4 and Fig. 5 was selected as being representative of current practice on the Colorado Plateau. The sulfuric acid leach slurry (60% solids) passes into four classifiers to remove sands and four thickeners to remove slimes. The classifiers and thickeners are arranged for countercurrent washing of the sands and slimes with water to minimize losses of uranium in the waste streams. A flocculating agent (Dow Separan 2610 was selected as an example) is added to increase the settling rate of the slimes.

Details of the cost are shown in the following tables: clarification, Table 6; facility, Table 7; installed equipment, Table 8; and criteria, Table 9.

[redacted] [redacted]

[redacted]
ORNL-LR-DWG 8490

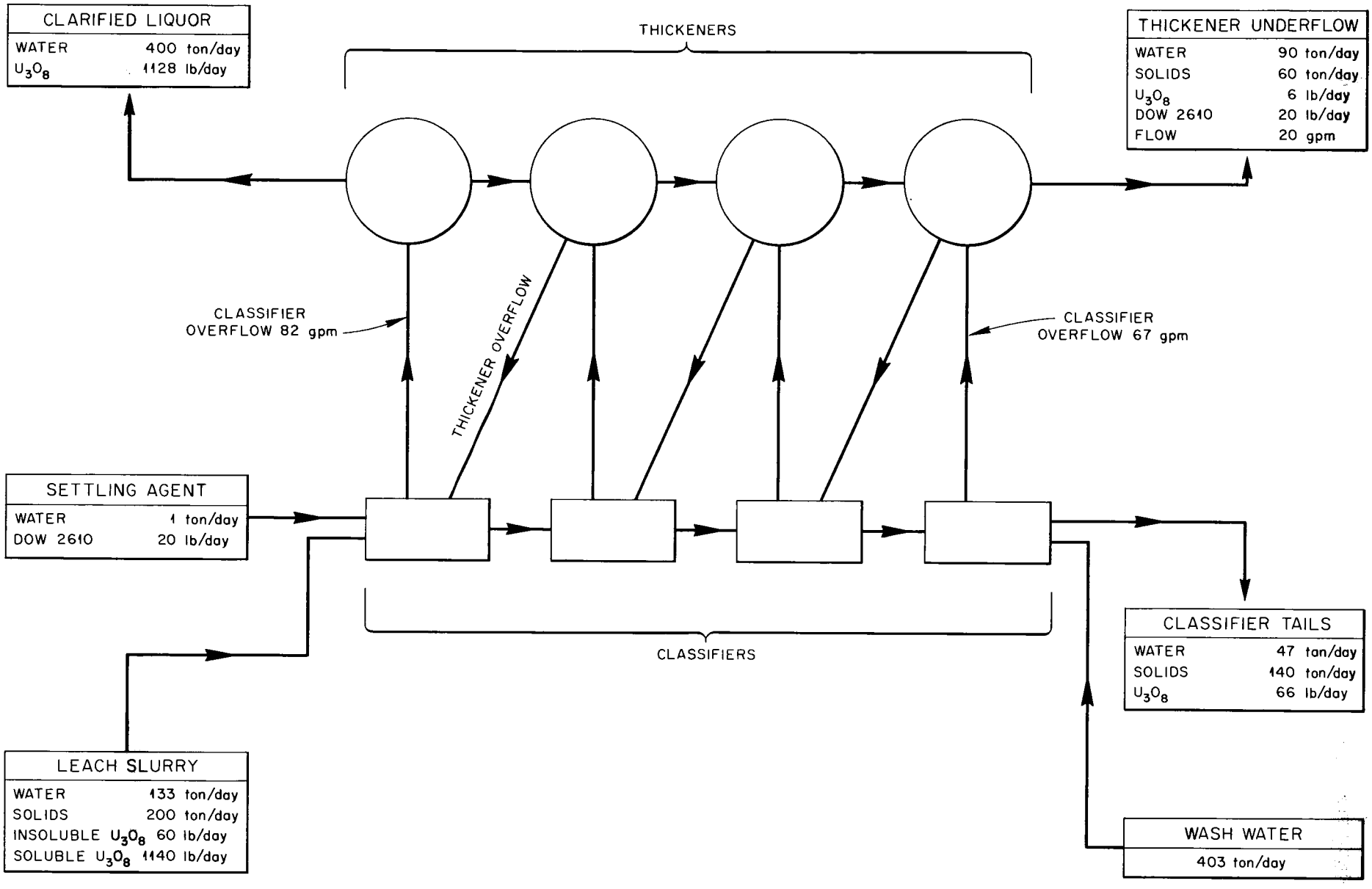

[redacted]

Fig. 4. Clarification Material Balance Flow Diagram.

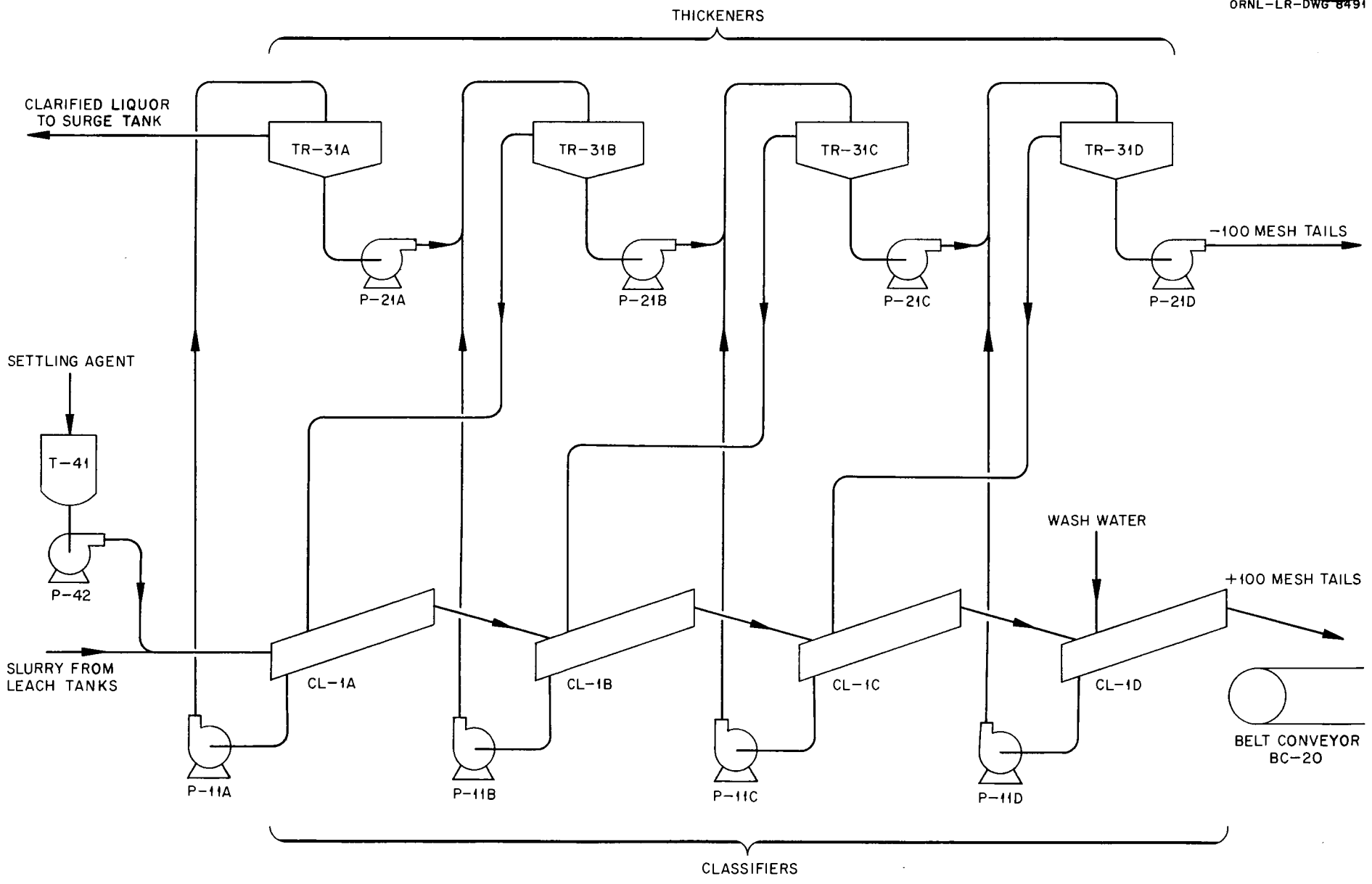

Fig. 5. Clarification Process and Equipment Flow Diagram.

[redacted] [redacted]

TABLE 6. COST OF CLARIFICATION

	Cost Per Day	Cost Per Ton of Ore	Cost Per Pound of U_3O_8
Labor			
Operating 1/	$ 54.00	$0.27	$0.048
Maintenance 2/	26.60	0.13	0.024
Supplies			
Operating 3/	21.20	0.11	0.019
Maintenance 4/	33.25	0.17	0.030
Utilities 5/	6.60	0.03	0.006
Total Operating Cost	$141.65	$0.71	$0.127
Amortization 6/	133.02	0.66	0.119
Total	$274.67	$1.37	$0.246

1/ One man per shift at $18 per man shift.
2/ 4% of Total Construction Cost per 360-day year (see Table 7).
3/ 0.1 lb Dow 2610/ton ore at $1.06 per lb.
4/ 5% of Total Construction Cost per 360-day year (see Table 7).
5/ Electricity at $0.011 per kwh.
6/ 20% of Total Construction Cost per 360-day year (see Table 7).

[redacted] [redacted]

[redacted] [redacted]

TABLE 7. COST OF CLARIFICATION FACILITY

A.	Cost of installed process equipment 1/	$138,152
B.	Other Direct Costs	
	Process piping (7% of A)	9,671
	Instrumentation (3% of A)	4,145
	Electrical wiring 2/	1,250
	Manufacturing buildings 3/	17,000
	Footings and foundations (5% of A)	6,908
	Painting and scaffolding (2% of A)	2,763
C.	Total Direct Costs	$179,889
D.	Engineering and field expense (10% of C)	17,989
E.	Contingency [10% of (C+D)]	19,788
F.	Contractor's fee and overhead [10% of (C+D+E)]	21,766
G.	Total Construction Cost	$239,432

1/ Includes material, labor, and freight (see Table 8).
2/ $50 per installed kw for lighting, equipment, and instrumentation.
3/ 21,360 cu ft. Does not include lighting or sanitary facilities.

[redacted] [redacted]

[redacted] [redacted]

TABLE 8. INSTALLED PROCESS EQUIPMENT COSTS FOR CLARIFICATION

Item No.	No. Req'd	Description	Installed Equipment Cost
CL-1	4	Classifier, 30-inch screw type, acid proof construction	$ 30,908
P-11	8	Classifier overflow pump rubber-lined centrifugal	6,320
BC-20	1	24-inch belt conveyor for sand disposal	15,000
P-21	8	Thickener underflow pump rubber lined centrifugal	5,992
TR-31	4	Thickener, 36-foot diameter, wood tank, acid proof construction	79,212
T-41	1	Settling agent feeder (package unit)	720
		Total	$138,152

TABLE 9. CLARIFICATION CRITERIA

Soluble uranium loss in clarification tails	1% of U_3O_8 in ore
Mesh separation in classifiers	100 mesh
Unit settling area of thickeners	15 sq ft per ton of solids per day
Thickener underflow	40% solids
Classifier discharge (sand)	75% solids

[redacted] [redacted]

[redacted] [redacted]

4.0 COST OF AMINE EXTRACTION

4.1 Process Description

The material flow diagram is shown in Fig. 6, and the material balance in Table 10. The engineering flow diagram is shown in Fig. 7, and the equipment for secondary stripping is shown in Fig. 8.

Leach liquor leaving the clarification system is stored in head tanks (T-1, Fig. 7) so that analyses of the liquor can be made prior to its use. The uranium concentration and flow rate of the head liquor determine the flow rates of organic phase and stripping solutions. The clarified liquor is pumped from the head tanks (T-1) through four mixer-settlers (T-2 and T-3) countercurrent to the organic phase which extracts essentially all of the uranium. The raffinate is pumped to a final settler tank (T-4) to provide sufficient settling time to recover most of the organic entrainment before discarding the raffinate. The organic extract flows from the extraction section into a holdup tank (T-8) from which it is pumped to the stripping operation.

The organic extract flows through the stripping section (T-9 and T-10) countercurrent to the aqueous strip solution (from T-11). The organic phase is stripped of its uranium content and the barren organic flows by gravity to the storage tank (T-7). The uranium loaded strip solution is pumped to the precipitation tanks (T-12) where ammonia is added to precipitate the uranium. At the end of precipitation, the slurry is filtered (F-40) and the filtrate and wash water are discarded. The washed cake is then delivered to the calcining operation.

When processing head liquors that contain a relatively high concentration of molybdenum, the organic phase leaving the uranium stripping section must be stripped of its molybdenum content before pumping it to the extraction operation to start another cycle. This is accomplished by contacting the organic phase with a sodium carbonate solution in a single mixer-settler (T-16 and T-17, Fig. 8).* The aqueous phase containing the molybdenum is discarded and the organic phase is pumped to the extractors.

*The reaction goes to completion, the necessary condition being that sufficient holdup time be provided for the particular mixing conditions.

[redacted] [redacted]

[redacted]
ORNL-LR-DWG 8492
[redacted]

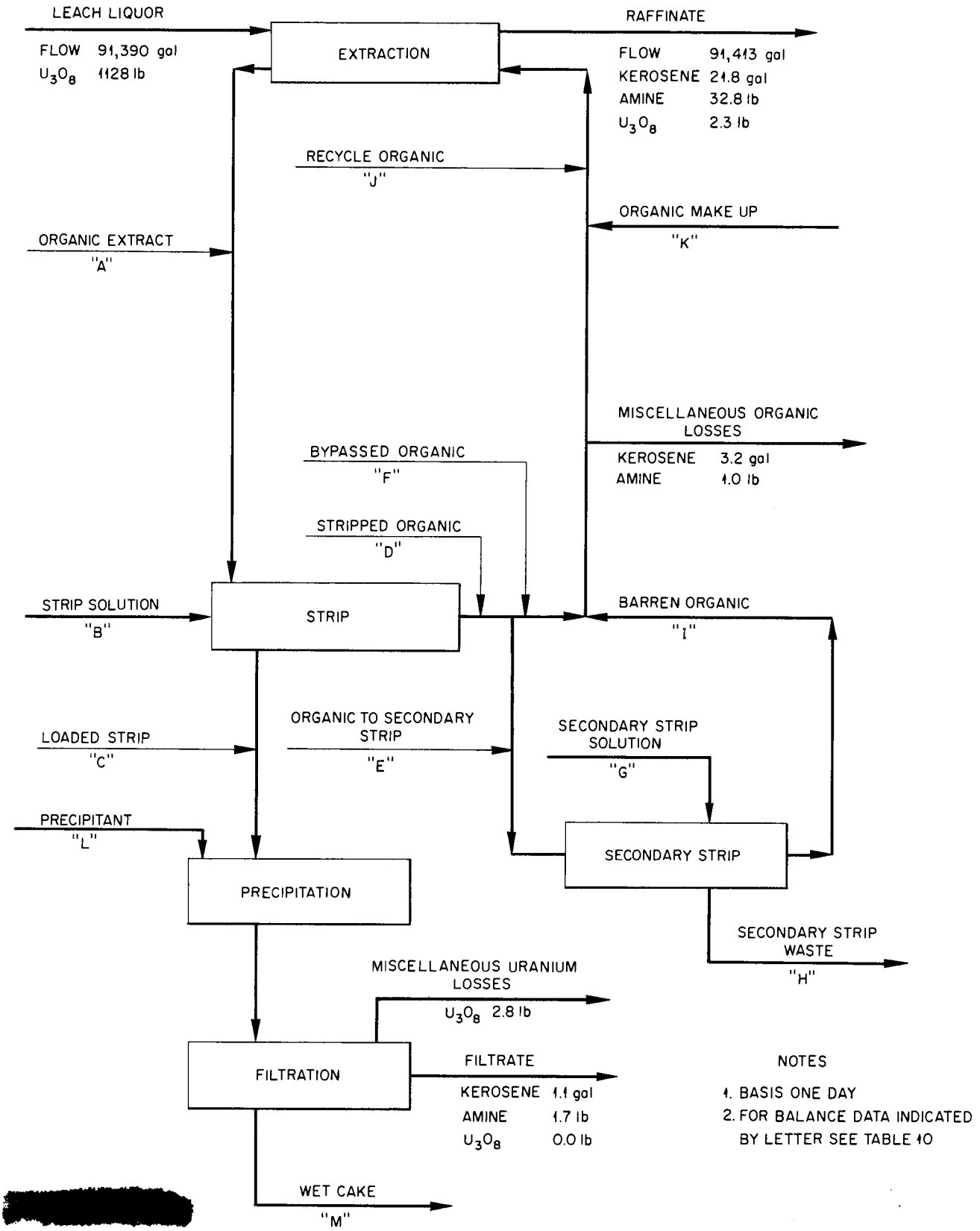

[redacted]

Fig. 6. Materials Flow Diagram.

[redacted]

TABLE 10. MATERIAL BALANCE AMINE EXTRACTION

BASIS: ONE DAY

Stream	Designation and Component		Units	Without Secondary Strip	With Secondary Strip
A	Organic Extract	flow	gal	32,112.8	31,824.8
		kerosene	gal	30,629.2	30,354.5
		amine	lb	10,051.3	9,961.2
		U_3O_8	lb	1,136.1	1,125.9
B	Strip Solution	flow	gal	4,817.5	4,787.8
		NaCl	lb	2,350.0	2,328.9
		H_2SO_4	lb	-	195.4
C	Loaded Strip	flow	gal	4,818.7	4,789.0
		kerosene	gal	1.1	1.1
		amine	lb	1.7	1.7
		U_3O_8	lb	1,125.7	1,124.3
D	Stripped Organic	flow	gal	32,111.6	31,823.6
		kerosene	gal	30,628.1	30,353.4
		amine	lb	10,049.6	9,959.5
		U_3O_8	lb	10.4	1.6
E	Organic to Secondary Strip	flow	gal	-	31,823.6
		kerosene	gal	-	30,353.4
		amine	lb	-	9,959.5
		U_3O_8	lb	-	1.6
F	Bypassed Organic	flow	gal	32,111.6	-
		kerosene	gal	30,628.1	-
		amine	lb	10,049.6	-
		U_3O_8	lb	10.4	-
G	Secondary Strip Solution	flow	gal	-	1,605.8
		Na_2CO_3	lb	-	1,478.0

[redacted]

[redacted]

TABLE 10 (continued)

Stream	Designation and Component		Units	Without Secondary Strip	With Secondary Strip
H	Secondary Strip Waste	flow	gal	-	1,606.2
		kerosene	gal	-	0.4
		amine	lb	-	0.9
		U_3O_8	lb	-	1.3
I	Barren Organic	flow	gal	-	31,823.2
		kerosene	gal	-	30,353.0
		amine	lb	-	9,958.6
		U_3O_8	lb	-	0.3
J	Recycle Organic	flow	gal	32,111.6	31,823.2
		kerosene	gal	30,628.1	30,353.0
		amine	lb	10,049.6	9,958.6
		U_3O_8	lb	10.4	0.3
K	Organic Make-up	flow	gal	27.4	27.8
		kerosene	gal	26.1	26.5
		amine	lb	35.5	36.4
L	Precipitant	ammonia	lb	307.3	306.9
M	Wet Cake	U_3O_8	lb	1,122.9	1,121.5
	Over-all Recovery*		%	99.55	99.42

*Based on U content of head liquor.

[redacted]

[redacted]

ORNL-LR-DWG 8493

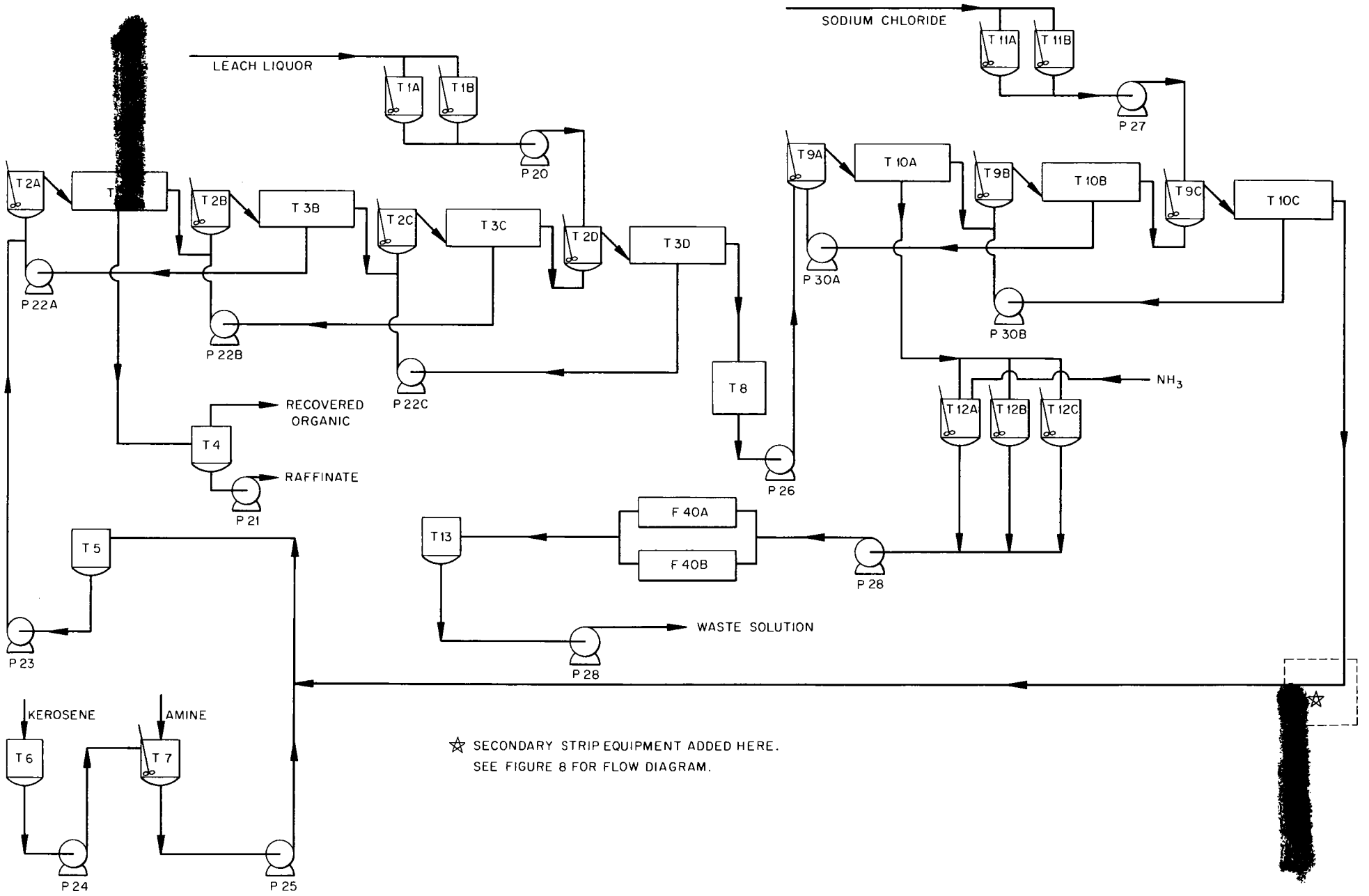

Fig. 7. Amine Extraction Flow Diagram; No Secondary Strip.

[redacted]

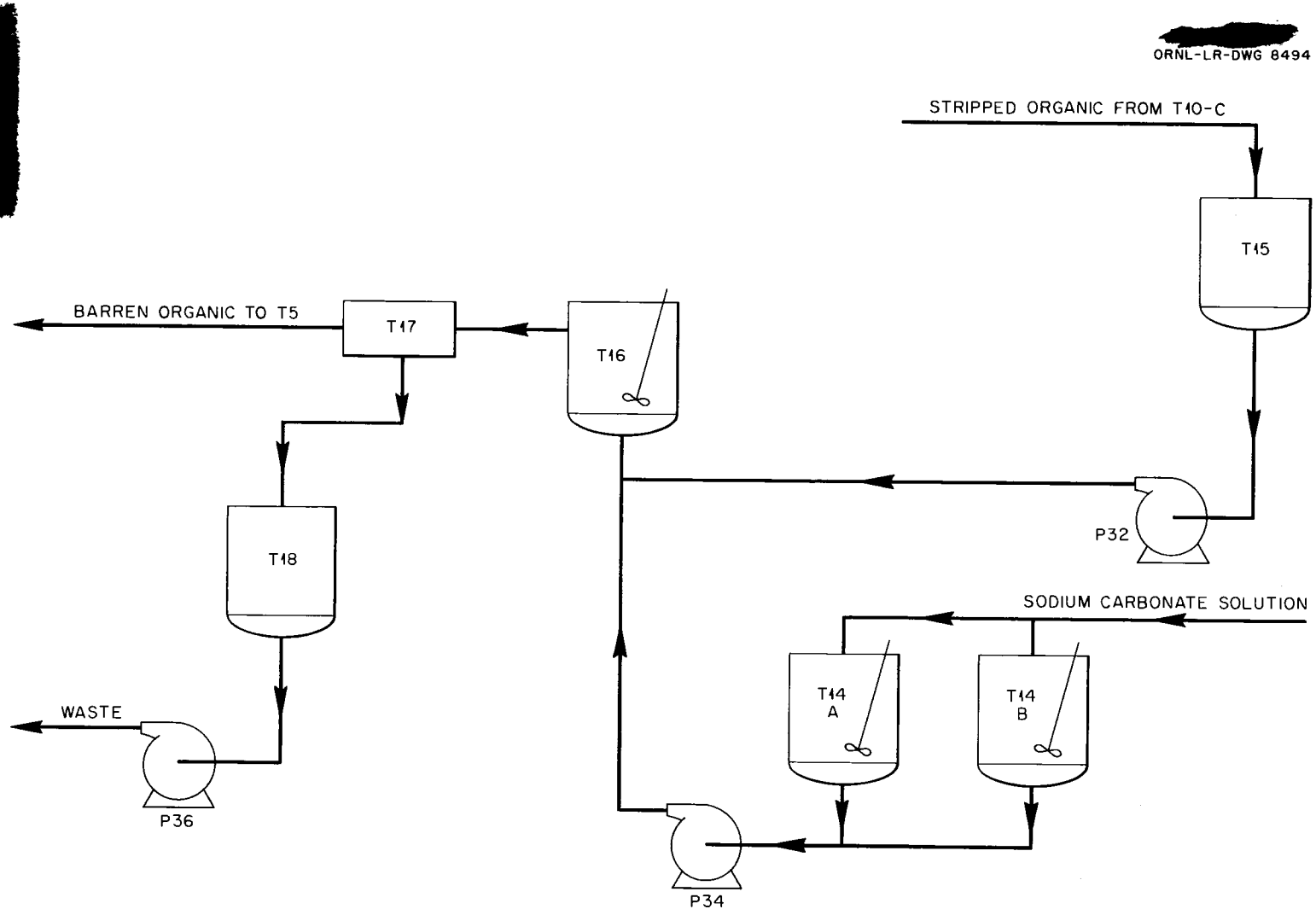

Fig. 8. Secondary Stripping Flow Diagram.

[redacted]

4.2 Cost of Extraction, Stripping, Precipitating, and Filtering

The costs associated with the extraction, stripping, and precipitation operations are shown in Table 11. Since it may be necessary to pass all of the sodium chloride stripped organic phase through a secondary sodium carbonate strip operation, the costs were computed for 100% secondary stripping of the organic phase as well as for no secondary stripping. The cost of chemicals is shown in Table 12. The cost of the facility may be found in Table 13. The cost of the installed items of equipment is given in Tables 14 and 15. The criteria are shown in Table 16.

TABLE 11. COST OF AMINE EXTRACTION WITH AND WITHOUT SECONDARY STRIP

	Cost Per Ton of Ore		Cost Per Day		Cost Per Pound of U_3O_8	
	Without Secondary Strip	With Secondary Strip	Without Secondary Strip	With Secondary Strip	Without Secondary Strip	With Secondary Strip
Labor						
Operating 1/	$0.81	$0.81	$162.00	$162.00	$0.144	$0.144
Maintenance 2/	0.11	0.12	22.62	25.38	0.020	0.023
Supplies						
Operating 3/	0.35	0.53	69.12	105.95	0.061	0.095
Maintenance 4/	0.14	0.16	28.28	31.72	0.026	0.028
Utilities						
Steam 5/	0.05	0.05	9.26	9.26	0.008	0.008
Electricity 6/	0.04	0.04	7.77	8.39	0.007	0.008
Total Operating Costs	$1.50	$1.71	$299.05	$342.70	$0.266	$0.306
Amortization 7/	0.56	0.64	113.12	126.90	0.101	0.113
Total	$2.06	$2.35	$412.17	$469.60	$0.367	$0.419

1/ Three men per shift at $18.00 per man shift.
2/ Four percent of the total construction cost per 360-day year (see Table 13).
3/ See Table 12.
4/ Five percent of the total construction cost per 360-day year (see Table 13).
5/ Steam at $0.90 per M lb.
6/ Electricity at $0.011 per kwh.
7/ Twenty percent of the total construction cost per 360-day year (see Table 13).

TABLE 12. CHEMICALS CONSUMPTION AND COSTS

BASIS: ONE DAY

Chemical	Units	Daily Usage: Without Secondary Strip	Daily Usage: With Secondary Strip	Unit Cost[1]	Chemicals Costs/Day: Without Secondary Strip	Chemicals Costs/Day: With Secondary Strip
Kerosene	gal	26.1	26.5	$0.14	$ 3.654	$ 3.710
Amine	lb	35.5	36.4	0.85	30.175	30.940
Sodium chloride	lb	2,350.0	2,328.9	0.0075	17.625	17.467
Sulfuric acid	lb	-	195.4	0.0150	-	2.931
Sodium carbonate	lb	-	1,478.0	0.0225	-	33.255
Ammonia	lb	307.3	306.9	0.0575	17.670	17.647
Total Cost Per Day					$69.124	$105.950

1/ At Grand Junction, Colorado.

[redacted]

[redacted]

TABLE 13. COST OF AMINE EXTRACTION FACILITY WITH AND WITHOUT SECONDARY STRIP

		Without Secondary Strip	With Secondary Strip
A.	Cost of Installed Process Equipment 1/	$ 78,815	$ 90,415
B.	Other Direct Costs		
	Process Piping (30% of A)	23,645	27,125
	Instrumentation (3% of A)	2,364	2,712
	Electrical Wiring 2/	3,640	4,030
	Manufacturing Buildings 3/	39,000	41,000
	Footings and Foundations (5% of A)	3,941	4,521
	Painting and Scaffolding (2% of A)	1,576	1,808
C.	Total Direct Costs	$152,981	$171,611
D.	Engineering and Field Expense (10% of C)	15,298	17,161
E.	Contingency [10% of (C+D)]	16,828	18,877
F.	Contractor's Fee and Overhead [10% of (C+D+E)]	18,511	20,765
G.	Total Construction Cost	$203,618	$228,414

1/ Includes materials, labor, and freight (see Tables 14 and 15).

2/ $50 per installed kw for lighting, equipment, and instrumentation.

3/ 68,640 cu ft without secondary strip; 73,040 cu ft with secondary strip. Does not include lighting and sanitary facilities.

[redacted]

[redacted]

TABLE 14. INSTALLED PROCESS EQUIPMENT WITHOUT SECONDARY STRIP

Item No.	No. Req'd	Description	Size	Material	Installed hp Each	Installed Equipment Cost Each	Installed Equipment Cost Total	Total Installed hp	Usage Factor %	Used hp
T-1	2	Leach Liquor Feed Storage Tank	100,000 gal	wood	25	$12,195	$24,390	50	16	8.0
T-2	4	Mixer Tank-Extractor	34 gal	Haveg 41	1/4	1,090	4,360	1	100	1.0
T-3	4	Settler Tank-Extractor	344 gal	Haveg 41	-	1,000	4,000	-	-	-
T-4	1	Entrainment Separator	559 gal	Haveg 41	-	1,145	1,145	-	-	-
T-5	1	Organic Storage	1,832 gal	Haveg 41	-	2,775	2,775	-	-	-
T-6	1	Kerosene Storage	1,500 gal	steel	-	440	440	-	-	-
T-7	1	Organic Make-up	100 gal	steel	1/2	570	570	0.5	33	0.2
T-8	1	Organic Extract Head Tank	225 gal	Haveg 41	-	800	800	-	-	-
T-9	3	Mix Tanks - Stripper	34 gal	Haveg 41	1/4	1,090	3,270	0.8	100	0.8
T-10	3	Settler Tank - Stripper	344 gal	Haveg 41	-	1,000	3,000	-	-	-
T-11	2	NaCl Strip Make-up	2,450 gal	Neop.lined	3	2,690	5,380	6	50	3.0
T-12	3	Precipitation Tank	2,000 gal	wood	3	1,290	3,870	9	67	6.0
T-13	1	Filtrate Head Tank	2,000 gal	wood	-	430	430	-	-	-
P-20	1	Leach Liquor Feed Pump	75 gpm	S.S.	2	930	930	2	100	2.0
P-21	2	Extractor Raffinate Pump	75 gpm	rub.lined	2	1,055	2,110	4	50	2.0
P-22	5	Extractor Interstage Pump	75 gpm	S.S.	2	930	4,650	10	60	6.0
P-23	2	Organic Feed Pump	30 gpm	rub.lined	1-1/2	950	1,900	3	50	1.5
P-24	1	Kerosene Transfer Pump	20 gpm	mild steel	1	470	470	1	33	0.3
P-25	1	Organic Make-up Pump	20 gpm	mild steel	1	470	470	1	100	1.0
P-26	2	Organic Extract Pump	30 gpm	S.S.	1-1/2	850	1,700	3	50	1.5
P-27	2	Strip Solution Feed Pump	5 gpm	Hast.	1/6	535	1,070	0.3	50	0.2
P-28	1	Filter Feed Pump	30 gpm	rub.lined	1-1/2	950	950	1.5	100	1.5
P-29	1	Filtrate Pump	30 gpm	rub.lined	1-1/2	950	950	1.5	100	1.5
P-30	3	Strip Interstage Pump	5 gpm	Hast.	1/6	535	1,605	0.5	67	0.3
F-40	2	Filter Press	480 sq ft	wood	-	3,790	7,580	-	-	-
		Total					$78,815	95.1		36.8

TABLE 15. INSTALLED PROCESS EQUIPMENT WITH SECONDARY STRIP

Item No.	No. req'd	Description	Size	Material	Installed hp Each	Installed Equipment Cost Each	Installed Equipment Cost Total	Total Installed hp	Usage Factor %	Used hp
T-1	2	Leach Liquor Feed Storage Tank	100,000 gal	wood	25	$12,195	$24,390	50	16	8.0
T-2	4	Mixer Tank - Extractor	34 gal	Haveg 41	1/4	1,090	4,360	1	100	1.0
T-3	4	Settling Tank - Extractor	344 gal	Haveg 41	-	1,000	4,000	-	-	-
T-4	1	Entrainment Separator	559 gal	Haveg 41	-	1,145	1,145	-	-	-
T-5	1	Organic Storage	2,393 gal	Haveg 41	-	3,745	3,745	-	-	-
T-6	1	Kerosene Storage	1,500 gal	steel	-	440	440	-	-	-
T-7	1	Organic Make-up	100 gal	steel	1/2	570	570	0.5	33	0.2
T-8	1	Organic Extract Head Tank	225 gal	Haveg 41	-	800	800	-	-	-
T-9	3	Mixer Tank - Stripper	34 gal	Haveg 41	1/4	1,090	3,270	0.8	100	0.8
T-10	3	Settler Tank - Stripper	344 gal	Haveg 41	-	1,000	3,000	-	-	-
T-11	2	NaCl Strip Make-up	2,450 gal	Neo lined	3	2,690	5,380	6	50	3.0
T-12	3	Precipitation Tank	2,000 gal	wood	3	1,290	3,870	9	67	6.0
T-13	1	Filtrate Head Tank	2,000 gal	wood	-	430	430	-	-	-
T-14	2	Na_2CO_3 Strip Make-up	1,000 gal	rub.lined	3	2,150	4,300	6	13	0.8
T-15	1	Stripped Organic Holdup	225 gal	Haveg 41	-	800	800	-	-	-
T-16	1	Mix Tank - Secondary Strip	34 gal	Haveg 41	1/4	1,090	1,090	0.3	100	0.3
T-17	1	Settler Tank - Secondary Strip	344 gal	Haveg 41	-	1,000	1,000	-	-	-
T-18	1	Spent Secondary Strip Rec.	1,000 gal	rub.lined	-	980	980	-	-	-
P-20	1	Leach Liquor Feed Pump	75 gpm	S.S.	2	930	930	2	100	2.0
P-21	2	Raffinate Pump	75 gpm	S.S.	2	930	1,860	4	50	2.0
P-22	5	Extractor Interstage Pump	75 gpm	S.S.	2	930	4,650	10	60	6.0
P-23	2	Organic Feed Pump	30 gpm	mild steel	1-1/2	520	1,040	3	50	1.5
P-24	1	Kerosene Transfer Pump	20 gpm	mild steel	1	470	470	1	33	0.3
P-25	1	Organic Make-up Pump	20 gpm	mild steel	1	470	470	1	100	1.0
P-26	2	Organic Extract Pump	30 gpm	S.S.	1-1/2	850	1,700	3	50	1.5
P-27	2	Strip Solution Feed Pump	5 gpm	Hast.	1/6	535	1,070	0.3	50	0.2
P-28	1	Filter Feed Pump	30 gpm	rub.lined	1-1/2	950	950	1.5	100	1.5
P-29	1	Filtrate Pump	30 gpm	rub.lined	1-1/2	950	950	1.5	100	1.5
P-30	3	Strip Interstage Pump	5 gpm	Hast.	1/6	535	1,605	0.5	67	0.3
P-32	2	Organic to Secondary Strip Pump	30 gpm	rub.lined	1-1/2	950	1,900	3.0	50	1.5
P-34	2	Sodium Carbonate Feed Pump	1.6 gpm	rubber	1/20	430	860	0.1	50	0.1
P-36	2	Waste Pump	5 gpm	Hast.	1/2	405	810	1.0	50	0.5
F-40	2	Filter Press	480 sq ft	wood	-	3,790	7,580	-	-	-
		Total					$90,415	105.5		40.0

[redacted]

[redacted]

TABLE 16. AMINE EXTRACTION CRITERIA

Extraction	
Organic Extractant	Rohm & Haas Amine 9D-178
Organic Diluent	Kerosene
Concentration Amine in Diluent	0.1 molar
Loading of Organic Extract	4.24 gms U_3O_8 per liter
Type of Extractor	4 stage mixer-settler
Residence time in Mixer[1]	0.33 minutes
Residence time in Settler[2]	3.65 minutes
Residence time in entrainment Separator	8 minutes
Stripping, Primary	
Stripping Agent	Sodium Chloride
Concentration of Sodium Chloride	1 molar
Concentration of Sulfuric Acid	0.05 molar
Theoretical Stripping Requirement	1 mole NaCl per mole amine
Actual Strip Usage	150% of theoretical requirement
Type of Stripper	3-stage mixer-settler
Residence time in Mixer[1]	1.2 minutes
Residence time in Settler[2]	12.4 minutes
Strip, Secondary	
Stripping Agent	Sodium Carbonate
Concentration of Reagent	10% solution
Theoretical Requirement	0.5 moles Na_2CO_3 per mole amine
Actual Usage	105% of theoretical requirement
Type of Stripper	Single stage mixer-settler
Residence time in Mixer[1]	1.5 minutes
Residence time in Settler[2]	14.8 minutes
Precipitation	
Precipitant	Anhydrous ammonia
Theoretical Requirement	3 moles ammonia per mole uranium
Actual Precipitant Usage	150% of theoretical requirement

1. The three types of mixers are the same size and configuration.
2. The three types of settlers are the same size and configuration.

[redacted]

[redacted]

[redacted] [redacted]

TABLE 16 (Continued)

Rate of Loss of Organic Phase	
Entrainment	0.25 ml organic per liter aqueous
Solubility of amine in aqueous	32 ppm
Miscellaneous Losses (spills, etc.)	100 gallons per month
Uranium Losses and Recycle	
Organic recycle NaCl strip	0.039 g U_3O_8 per liter
Organic leaving NaCl-H_2SO_4 strip	0.006 g U_3O_8 per liter
Uranium loss to raffinate	0.003 g U_3O_8 per liter
Uranium loss to filtrate	0.001 g U_3O_8 per liter
Organic recycle Na_2CO_3 secondary strip	0.001 g U_3O_8 per liter
Miscellaneous Losses (spills, etc.)	0.25% of U_3O_8 in clarified liquor

[redacted] [redacted]

[redacted] [redacted]

5.0 COST OF CALCINING AND PACKAGING

The calcining and packaging process shown in Fig. 9 is based on a process used in one of the operating mills on the Colorado Plateau. The wet filter cake is mixed with water; the resulting slurry is pumped to a calciner. The calcine is cooled and packaged as product.

Details of the costs are shown in the following tables: calcining and packaging of product, Table 17; facility, Table 18; installed equipment, Table 19; and criteria, Table 20.

[redacted] [redacted]

[redacted]

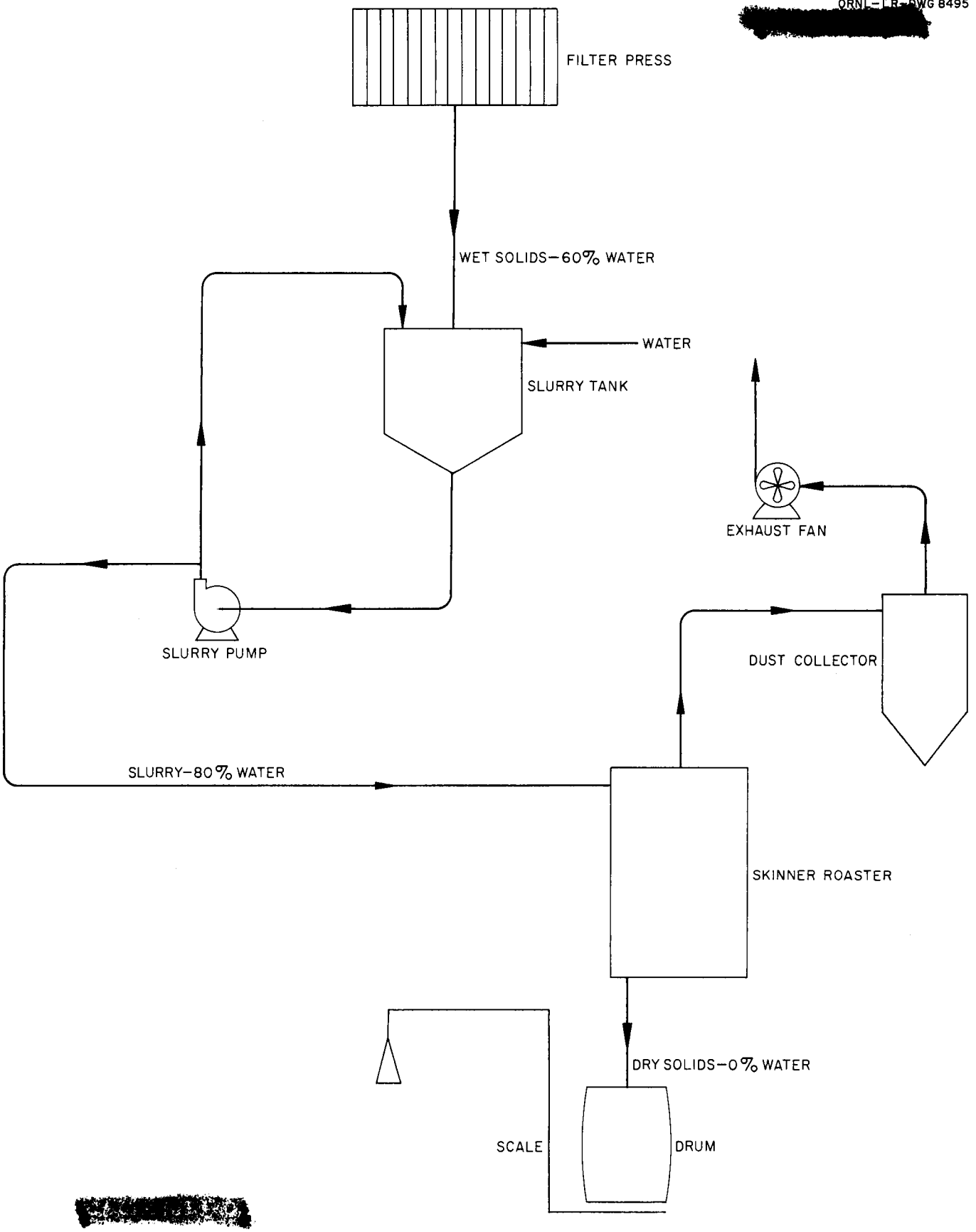

[redacted]

Fig. 9. Calcining and Product Packaging Flow Diagram.

[redacted]

TABLE 17. COST OF CALCINING AND PRODUCT PACKAGING

Item	Cost Per Day	Cost Per Ton of Ore	Cost Per Pound of U_3O_8
Labor			
Operating 1/	$ 6.75	$0.03	$0.006
Maintenance 2/	3.59	0.02	0.003
Supplies			
Operating			
Oil 3/	9.68	0.05	0.008
Barrels 4/	18.95	0.09	0.017
Maintenance 5/	4.49	0.02	0.004
Utilities			
Electricity 6/	0.96	0.01	0.001
Total Operating Costs	$44.42	$0.22	$0.039
Amortization 7/	17.97	0.09	0.016
Total	$62.39	$0.31	$0.055

1/ One man-hour per shift at $18.00 per man shift.
2/ Four percent of the total construction cost per 360-day year (see Table 18).
3/ 88 gallons of oil per day at $0.11 per gallon.
4/ Barrels at $5.00 each.
5/ Five percent of the total construction cost per 360-day year (see Table 18).
6/ Electricity at $0.011 per kwh.
7/ Twenty percent of the total construction cost per 360-day year (see Table 18).

[redacted]

[redacted] [redacted]

TABLE 18. COST OF CALCINING AND PRODUCT PACKAGING FACILITY

A.	Cost of Installed Process Equipment 1/	$14,552
B.	Other Direct Costs	
	Process piping (7% of A)	1,019
	Instrumentation (3% of A)	437
	Electrical wiring ($50 per kw)	175
	Buildings (5600 cu ft)	7,100
	Footings and foundations (5% of A)	728
	Painting and scaffolding (2% of A)	291
C.	Total Direct Costs	$24,302
D.	Engineering and Field Expense (10% of C)	2,430
E.	Contingency [10% of (C+D)]	2,673
F.	Contractor's Fee and Overhead [10% of (C+D+E)]	2,941
G.	Total Construction Cost	$32,346

1/ Includes materials, labor, and freight (see Table 19).

TABLE 19. INSTALLED PROCESS EQUIPMENT COSTS FOR CALCINING AND PRODUCT PACKAGING

Equipment	Cost
Hopper	$ 1,066
Pump	510
Skinner Roaster	10,913
Dust Collector	250
Exhaust Fan	325
Scales, Printing (0-1000 lbs)	1,488
Total Installed Equipment	$14,552

[redacted] [redacted]

[redacted]

[redacted]

TABLE 20. CALCINING AND PRODUCT PACKAGING CRITERIA

Filter cake (wet cake) as received. . .	60% water
Roaster calcined product.	0% water
Product purity (excluding water). . . .	85% U_3O_8
Product packaged.	350 pounds per barrel

[redacted]

[redacted]